PATENT JOURNAL

INCLUDING TRADE MARKS, DESIGNS AND COPYRIGHT IN CINEMATOGRAPH FILMS

OCTOBER 2023 **VOL 56 ● No. 10**

Companies and Intellectual Property Commission

a member of the dtic group

Part II of II

ISSUED MONTHLY **DATE OF ISSUE: 25 OCTOBER 2023**

ISSN 2223-4837

PATENT JOURNAL

INCLUDING TRADE MARKS, DESIGNS AND COPYRIGHT IN CINEMATOGRAPH FILMS

VOL. 56 No. 10 **Date of Issue: 25 OCTOBER 2023**

PATENTS, TRADE MARKS, DESIGNS AND COPYRIGHT OFFICE

Official notices of proceedings under:

The Patents Act, 1978
The Designs Act, 1993
The Trade Marks Act, 1963
The Trade Marks Act, 1993
The Registration of Copyright in Cinematograph Films Act, 1977

Registrar of Patents, Trade Marks, Designs and Copyright

Note: CIPC acting on behalf of the Government of the Republic of South Africa, cannot guarantee the accuracy of its publications or undertake any responsibility for errors or omissions or their consequences.

TABLE OF CONTENTS

2. PATENTS 4
APPLICATIONS FOR PATENTS 5
ASSIGNMENTS IN TERMS OF SECTION 60-REGULATIONS 58-60 AND 64 (1) 84
CHANGE OF NAME IN TERMS OF REGULATION 39 87
PATENT LICENSES IN TERMS OF SECTION 60-REGULATIONS 58-60 AND 64 88
PATENT APPLICATIONS ABANDONED OR WITHDRAWN 88
APPLICATION FOR RESTORATION OF A LAPSED PATENT 88
VOLUNTARY SURRENDER OF A PATENT UNDER SECTION 64 (1), REGULATION 67 OF THE ACT 88
APPLICATIONS TO AMEND SPECIFICATION 89
INSPECTION OF SPECIFICATIONS 90
HYPOTHECATIONS 329
JUDGMENTS 329
OFFICE PRACTISE NOTICES 330
3. DESIGNS 331
APPLICATIONS FOR REGISTRATION OF DESIGNS IN TERMS OF ACT No. 195 OF 1993 332
CHANGE OF NAME IN TERMS OF REGULATION 24 336
APPLICATION FOR THE RESTORATION OF A LAPSED DESIGN UNDER SECTION 23 OF THE ACT 336
APPLICATION TO CORRECT AND/OR AMEND DESIGNS APPLICATION OR REGISTRATION 336
HYPOTHECATIONS 391
JUDGMENTS 391
OFFICE PRACTISE NOTICES 391
4. COPYRIGHT 392
NOTICES OF ACCEPTANCE 393
HYPOTHECATIONS 394
JUDGMENTS 394
OFFICE PRATISE NOTICES 394
5. CORRECTION NOTICES 395
TRADE MARK CORRECTION NOTICES 396
PATENT CORRECTION NOTICES 396
COPYRIGHT CORRECTION NOTICES 396
PATENTS 397
DESIGNS 426

2. PATENTS

PATENTS

APPLICATIONS FOR PATENTS

Copies of these specifications cannot be supplied until the applications have been accepted and advertised, or in the case of convention applications, until 18 months from the date of the application in the convention

THE PARTICULARS APPEAR IN THE FOLLOWING SEQUENCE:

The numerical references denote the following: **(21)** Number of application. **(22)** Date of application. **(DA)** Date of acceptance. **(51)** Class. **(71)** Name of applicant(s). **(72)** Name of all inventors. **(33)** Country. **(31)** Number and **(32)** Date of convention application. **(54)** Title of invention. **(00)** Number of sheets.

. - APPLIED ON 2023/09/25 -

2023/09064 ~ Complete ~54:SYSTEM AND METHOD FOR CLEANING WINE AND/OR A BARREL CONTAINING WINE ~71:ARIEL SCIENTIFIC INNOVATIONS LTD., Kiryat HaMada, P.O. Box 3, Israel ~72: DRORI, Elyashiv~ 33:US ~31:63/155,838 ~32:03/03/2021

2023/09041 ~ Complete ~54:METHOD AND PLANT FOR PRODUCING ONE OR MORE ELECTROLYSIS PRODUCTS ~71:Linde GmbH, Dr.-Carl-von-Linde-Straße 6-14, PULLACH 82049 , GERMANY, Germany ~72: BIRK, Robert;CHALAKOVA, Mariyana;DILLIG, Marius;FRUHMANN, Christian;HERZOG, Robert;LAUCHNER, Daniela;MÜLLER-THORWART, Ole;WELLENHOFER, Anton;WOLF, Andreas~ 33:EP ~31:22020472.1 ~32:29/09/2022

2023/09062 ~ Complete ~54:COMPOSITE MEMBRANE OF SPECIAL HIGHLY-ENHANCED FLUORINE-CONTAINING PROTON OR ION EXCHANGE MEMBRANE, COMPOSITE MEMBRANE ELECTRODE, SPECIAL HIGHLY-ENHANCED FLUORINECONTAINING CHLOR-ALKALI BATTERY MEMBRANE, SPECIAL RELEASE MEMBRANE, AND PREPARATION METHOD THEREFOR ~71:SHANGHAI HYPROOF NEW MATERIAL TECHNOLOGY CO., LTD, No. 1588, Chenqiao Road, Fengxian District, People's Republic of China;SHANGHAI HYPROOF TECHNOLOGY CO., LTD, Building 10. No. 860 Xinyang Road, Lingang New Area, China (Shanghai) Pilot Free Trade Zone Pudong New Area, People's Republic of China;ZHEJIANG HYPROOF NEW ENERGY CO. LTD, 7 Binjiang Road, Huimin Street, Jiashan County Jiaxing, People's Republic of China ~72: WU, Huisheng;YANG, Ying~ 33:CN ~31:202110331385.X ~32:29/03/2021;33:CN ~31:202110337002.X ~32:29/03/2021;33:CN ~31:202110337004.9 ~32:29/03/2021;33:CN ~31:202110337022.7 ~32:29/03/2021;33:CN ~31:202110337061.7 ~32:29/03/2021

2023/09020 ~ Provisional ~54:FLYING PEST EXTEMINATOR (FLYPEX) ~71:ONGE WA NGCONGO, 6 RAYLEIGH HOUSE, 214 CHE GUEVARA ROAD, South Africa;ONGO WA NGCONGO, 6 RAYLEIGH HOUSE, 214 CHE GUEVARA, South Africa ~72: ONGE WA NGCONGO;ONGO WA NGCONGO~

2023/09021 ~ Provisional ~54:VAPE HOLDER ~71:Daniel Minnie, 5A Chestnut Villas, Paris Avenue, South Africa ~72: Daniel Minnie~

2023/09034 ~ Complete ~54:ANTI-GLP1R ANTAGONIST ANTIBODIES AND METHODS OF USE THEREOF ~71:REGENERON PHARMACEUTICALS, INC., 777 Old Saw Mill River Road, Tarrytown, United States of America ~72: KIM, Jee, H.;OKAMOTO, Haruka~ 33:US ~31:63/023,307 ~32:12/05/2020

2023/09051 ~ Complete ~54:METHOD FOR MAINTAINING A NUCLEAR REACTOR ~71:FRAMATOME, 1 place Jean Millier, Tour Areva, France ~72: DUPUIS, Alexandre;LALLIER, Mickael;SZCZUREK, Eddy~ 33:FR ~31:2103357 ~32:31/03/2021

2023/09059 ~ Complete ~54:WHEEL ASSEMBLY INCLUDING INBOARD SIDE OUTER RIM COUPLED RING DEFINING A MECHANICAL STOP AND RELATED METHODS ~71:GACW Incorporated, 3100 West Ray Road, Suite 201, CHANDLER 85226, AZ, USA, United States of America ~72: KEMENY, Zoltan~ 33:US ~31:63/162,251 ~32:17/03/2021;33:US ~31:17/693,376 ~32:13/03/2022

2023/09063 ~ Complete ~54:A FISH-PASSING SYSTEM AND A FISH-PASSING METHOD WITH TOURIST ORNAMENTAL FUNCTION ~71:POWER CHINA GUIYANG ENGINEERING CORPORATION LIMITED, 16 Xingqian Road, Guanshanhu Lake District, Guiyang, People's Republic of China ~72: Fan CHEN;Hao XIA;Hongxin CAI;Jiafei ZHOU;Lang WEI;Tengfei TANG;Xiao ZONG;Yi ZHAO;Zaixing ZHAO~ 33:CN ~31:202210487766.1 ~32:06/05/2022

2023/09026 ~ Complete ~54:METHOD FOR FULL-SIZE DEEP SULFIDIZATION AND COARSE-FINE PARTICLE CLASSIFIED AND ENHANCED FLOTATION OF ARGILLACEOUS COPPER OXIDE ORE ~71:Kunming University of Science and Technology, No. 253 Xuefu Road, Wuhua District, Kunming City, Yunnan Province, 650093, People's Republic of China ~72: FENG, Qicheng;HAN, Guang;LIU, Dianwen;LU, Wanming;SHEN, Zhihao;TANG, Yanyu;WANG, Han;WEN, Shuming;YANG, Wenhang;ZHANG, Qian~ 33:CN ~31:202211336488.6 ~32:28/10/2022

2023/09030 ~ Complete ~54:COUPLING CONTROL SYSTEM AND METHOD THEREOF OF ROADWAY SURROUNDING ROCK ANCHORING AND PRESSURE RELIEF IN KEY AREAS OF SURROUNDING ROCK ~71:CHINA UNIVERSITY OF MINING AND TECHNOLOGY-BEIJING, No. Ding-11 Xueyuan Road, Haidian District, Beijing, 100083, People's Republic of China ~72: CHEN, Dongdong;XIE, Shengrong~ 33:CN ~31:202310641071.9 ~32:01/06/2023

2023/09038 ~ Complete ~54:COMPOSITE STRUCTURAL BOARD ~71:WACO AFRICA (PTY) LIMITED t/a FORMSCAFF, 181 Barbara Road,, South Africa ~72: ESTERHUYSEN, Eric Carl;POUWELS, Klaas~ 33:ZA ~31:2022/10591 ~32:26/09/2022

2023/09049 ~ Complete ~54:HOLLOW FIBER IMMERSED MEMBRANE MODULE AND CASSETTE WITH HIGH PACKING DENSITY AND VERTICAL PERMEATE PORT CONNECTIONS ~71:BL TECHNOLOGIES, INC., 5951 Clearwater Drive, Minnetonka, Minnesota, 55343, United States of America ~72: GAVIN JAMES BOYLE;IVAN ANDJELIC;NICHOLAS WILLIAM H ADAMS;REID BAYLY~ 33:US ~31:63/167,435 ~32:29/03/2021

2023/09058 ~ Complete ~54:IL-38-SPECIFIC ANTIBODIES ~71:Immunome, Inc., 665 Stockton Drive, Suite 300, EXTON 19341, PA, USA, United States of America ~72: HARMAN, Ben;LUNDGREN, Karen;NIKITIN, Pavel A.;ROBINSON, Matthew K.;SHEN, Fang~ 33:US ~31:63/167,105 ~32:28/03/2021;33:US ~31:63/236,454 ~32:24/08/2021

2023/09027 ~ Complete ~54:NOVEL PHOTOVOLTAIC AND TROUGH-TYPE SOLAR ENERGY COMPLEMENTARY ASPHALT HEATING SYSTEM ~71:Henan Agricultural University, Henan Agricultural University, No. 63 Agricultural Road, Jinshui District, Zhengzhou City, Henan Province, 450002, People's Republic of China;Henan Jiuyi Environmental Protection Technology Co., Ltd., National University Science Park, No. 11 Changchun Road, Gaoxin District, Zhengzhou City, Henan Province, 450001, People's Republic of China ~72: GAO, Linchao;HUANG, Li;JIA, Zhuoya;KONG, Lingchen;LIU, Chunyu;LIU, Shengyong;LIU, Tingting;QING, Chunyao;REN, Changzhong;SUO, Feng;TAO, Hongge;WANG, Zhenzhong;ZHAI, Shuncai;ZHAO, Dengke;ZHEN, Zi'ang~

2023/09032 ~ Complete ~54:WIRE COATING DEVICE, METHOD, AND SYSTEM ~71:Thermo Plastic Wire Coatings (Pty) Ltd., 11 Brammer Street, South Africa ~72: VILJOEN, Martin Dawid~ 33:ZA ~31:2022/10592 ~32:26/09/2022

2023/09037 ~ Complete ~54:AN ACCESSORY FOR A VEHICLE ~71:Jack Out, LLC, 111 Broadway Avenue #23, PUEBLO 81004-4230, CO, USA, United States of America ~72: HENRIKSON, Patrick Michael~ 33:ZA ~31:2022/10703 ~32:28/09/2022

2023/09044 ~ Complete ~54:MICROWAVE PHYSIOTHERAPY ACUPOINT MOXIBUSTION DEVICE AND USE METHOD THEREOF ~71:HENAN LIXINGHE MEDICAL TECHNOLOGY CO., LTD, West Hall, 1st Floor, Administrative Committee Of Economic And Technological Development Zone, Lankao County, Kaifeng, Henan, 475300, People's Republic of China ~72: ZHANG, Yanming~ 33:CN ~31:202211087235.X ~32:07/09/2022

2023/09052 ~ Complete ~54:DETERMINING A STATE OF EQUIPMENT ~71:Sandvik SRP AB, Stationsplan 1, SVEDALA 23381, SWEDEN, Sweden ~72: DAHLBERG, Mats;HOVÉN, Anders;LINDBERG, Mikael;RUBIN, Marie;SUNDSTRÖM, Petra~ 33:EP ~31:21166179.8 ~32:31/03/2021

2023/09055 ~ Complete ~54:HETEROCYCLIC COMPOUNDS ~71:F. Hoffmann-La Roche AG, Grenzacherstrasse 124, BASEL 4070, SWITZERLAND, Switzerland ~72: AMOUSSA, Machoud;BENZ, Joerg;BRIAN, Niels Kevin;FRISTON, Kallie;GIROUD, Maude;GRETHER, Uwe;GROEBKE ZBINDEN, Katrin;HORNSPERGER, Benoit;KROLL, Carsten;KUHN, Bernd;LEAKE, Camiel John;MARTIN, Rainer E.;NIPPA, David Friedrich Erhard;O'HARA, Fionn Susannah;PUELLMANN, Bernd;RICHTER, Hans;RITTER, Martin;ROMBACH, Didier;SCHMID, Philipp Claudio;ZHANG, Shounan~ 33:EP ~31:21170090.1 ~32:23/04/2021;33:IB ~31:2022/083125 ~32:25/03/2022

2023/09022 ~ Provisional ~54:BENEFICIATION OF AN ORE BEARING ONE OR MORE SULPHIDE MINERALS ~71:BETACHEM (PROPRIETARY) LIMITED, 31 Pafuri Road, EMMARENTIA, Johannesburg 2195, Gauteng, SOUTH AFRICA, South Africa ~72: GROBLER, Elze;NEL, Diderik Johannes~

2023/09040 ~ Complete ~54:FILTER FOR INFUSION MEDICAL LINES ~71:Industrie Borla S.p.A., Via G. Di Vittorio, 7 bis, MONCALIERI (TORINO) I-10024, ITALY, Italy ~72: GUALA, Gianni~ 33:IT ~31:102022000019893 ~32:28/09/2022

2023/09043 ~ Complete ~54:IN-SITU SAMPLING DEVICE FOR BACKFILL SLURRY ~71:UNIVERSITY OF SCIENCE AND TECHNOLOGY BEIJING, No. 30 Xueyuan Road, Haidian District, People's Republic of China;XILIN GOL LEAGUE SHANJIN BAIYINHUBU MINING CO., LTD., Sami Su Mu, East Wuzhumuqin Banner, Xilin Gol League, People's Republic of China ~72: FU, Jianxin;LI, Teng;ZHU, Zhengkun~ 33:CN ~31:2022112313143 ~32:09/10/2022

2023/09047 ~ Complete ~54:GUCY2C BINDING POLYPEPTIDE AND USES THEREOF ~71:LG CHEM, LTD., 128, Yeoui-daero, Yeongdeungpo-gu, Seoul, 07336, Republic of Korea ~72: BEOM JU HONG;EUNHYE CHOI;JUNG YOUN SHIN;NAKYOUNG LEE;SOYEON YANG;YEONGRIM KO;YOUNGKYUN KIM~ 33:KR ~31:10-2021-0045510 ~32:07/04/2021

2023/09057 ~ Complete ~54:MODIFIED RIBONUCLEIC ACIDS AND USES THEREOF ~71:Helix Nanotechnologies, Inc., 5 Channel Center Street, Suite 600, BOSTON 02210, MA, USA, United States of America ~72: BACKMAN, Kyle;DHAR, Nikhil;EROSHENKO, Nikolai;KEAVENEY, Marianna;QUINN, Justin;WEBSTER, Everett~ 33:US ~31:63/185,925 ~32:07/05/2021;33:US ~31:63/273,031 ~32:28/10/2021

2023/09024 ~ Complete ~54:AN ADAPTIVE ADJUSTMENT DEVICE FOR PHOTOVOLTAIC SOLAR PANELS AND ITS REALIZATION METHOD ~71:Chuzhou University, No.1 Huifeng West Road, Chuzhou City, Anhui Province, 239000, People's Republic of China ~72: Shiya HU~

2023/09028 ~ Complete ~54:A SYSTEM TO STRENGTHEN QUANTUM CRYPTOGRAPHY SECURITY ~71:Dr. Vishal Sharma, S/O Shri Kailash Chandra Sharma, Shivam Nagar- 1, Plot 56, Ramnagariya, Jagatpura, Jaipur, Rajasthan, 302017, India ~72: Dr. Vishal Sharma~

2023/09033 ~ Complete ~54:STRETCHABLE RUBBER SLEEVE FOR TOY VEHICLES ~71:HUGHES, WILLIAM BRANDON, 19 WATERKANT STREET, South Africa ~72: HUGHES, WILLIAM BRANDON~

2023/09036 ~ Complete ~54:METHOD FOR AND APPARATUS FOR DECODING AN AMBISONICS AUDIO SOUNDFIELD REPRESENTATION FOR AUDIO PLAYBACK USING 2D SETUPS ~71:DOLBY INTERNATIONAL AB, Apollo Building, 3E, Herikerbergweg 1-35, NL-1101, CN Amsterdam Zuidoost, Netherlands ~72: FLORIAN KEILER;JOHANNES BOEHM~ 33:EP ~31:13290255.2 ~32:23/10/2013

2023/09046 ~ Complete ~54:CROP MONITORING SYSTEM AND METHOD ~71:AGCO CORPORATION, 4205 River Green Parkway, Duluth, United States of America ~72: GODBOLE, Ravindra;GOEBEL, Darren~ 33:US ~31:63/184,414 ~32:05/05/2021

2023/09053 ~ Complete ~54:METHOD FOR MAKING BIO-SOURCED OIL DIELECTRIC FLUIDS ~71:Cargill, Incorporated, 15407 McGinty Road West, WAYZATA 55391, MN, USA, United States of America ~72: SBRAVATI, Alan;WESTERHOUT, Ron;WIRTZ, Kevin R.~

2023/09056 ~ Complete ~54:AGONISTIC ANTI-IL-2R ANTIBODIES AND METHODS OF USE ~71:TeneoBio, Inc., 7999 Gateway Boulevard, Suite 320, NEWARK 94560, CA, USA, United States of America ~72: HARRIS, Katherine;LORENTSEN, Kyle;LOUGHLIN, Kaitlyn;MALIK CHAUDHRY, Harbani Kaur;TRINKLEIN, Nathan~ 33:US ~31:63/170,383 ~32:02/04/2021;33:US ~31:63/239,883 ~32:01/09/2021

2023/09060 ~ Complete ~54:NETWORK COMMUNICATION APPARATUS AND SYSTEM ~71:RESKUBE LTD, 28 Wilton Road, Bexhill-on-Sea, United Kingdom ~72: LAWTON, Andrew James~ 33:GB ~31:2104166.0 ~32:24/03/2021

2023/09019 ~ Provisional ~54:AI POWERED TEXT TO SPEECH AUGMENTATION USING LLM ~71:MARK WYNESS VOSLOO, 47 NORTHOAKS PRIVATE ESTATE, NORTHOAKS AVENUE, HOUT BAY, South Africa ~72: MARK WYNESS VOSLOO~

2023/09023 ~ Complete ~54:DISTILLATION DEVICE AND METHOD FOR COAL TAR HYDROGENATION PROCESS ~71:XINJIANG CAREER TECHNICAL COLLEGE, 62 Beijing West Road, Kuitun City, People's Republic of China ~72: LI, Guofeng;LI, Shuai;LIU, Kainan;WANG, Mingquan;YUN, Liang~ 33:CN ~31:2023107350908 ~32:16/06/2023

2023/09031 ~ Complete ~54:CONCRETE TEMPERATURE-STRAIN INTELLIGENT MONITORING SYSTEM AND MONITORING METHOD BASED ON OFDR OPTICAL FIBER SENSING ~71:CHINA CONSTRUCTION SECOND ENGINEERING BUREAU LTD., 251 Beiyangwa, Liyuan Town, Tongzhou District, Beijing, People's Republic of China;Hohai University, No.1 Xikang Road, Gulou District, Nanjing City, Jiangsu Province, People's Republic of China;THE CIVIL ENGINEERING GROUP CORPORATION OF CHINA CONSTRUCTION SECOND ENGINEERING BUREAU LTD., 1-3/F, No. 21 Liyuan North Street, Tongzhou District, Beijing, People's Republic of China ~72: DING Xuezheng;GAO Lei;HU Xiaochuan;LIAO Manping;LIU Hongjun;YAO Zaifeng~

2023/09035 ~ Complete ~54:CELL CULTURE MEDIUM FOR EUKARYOTIC CELLS ~71:REGENERON PHARMACEUTICALS, INC., 777 Old Saw Mill River Road, Tarrytown, United States of America ~72: CHEN, John;GOLDEN, Nathaniel;LONEY, Theodore;SCOTT, Carolyn;XUE, Wei~ 33:US ~31:62/837,263 ~32:23/04/2019

2023/09042 ~ Complete ~54:DUST SUPPRESSION RESIN AND RESIN USE ~71:Universidade Federal do Espírito Santo - UFES, Av. Fernando Ferrari, 514, VITÓRIA - ES GOIABEIRAS - 29075-910, BRAZIL, Brazil;Vale S.A., Praia de Botafogo, nº 186, salas 1101, 1601, 1701, 1801, Bairro Botafogo, RIO DE JANEIRO 22250-145, BRAZIL, Brazil ~72: DA SILVA FILHO, Eloi Alves;DE MELO, Carlos Vital Paixã;VASCONCELOS, Renata Eliane Frank~ 33:BR ~31:13 2022 019265 0 ~32:26/09/2022

2023/09048 ~ Complete ~54:MULTIFUNCTIONAL IMMUNE CELL THERAPIES ~71:ARCELLX, INC., 25 West Watkins Mill Road, Suite A Gaithersburg, Maryland, 20878, United States of America ~72: DAVID M HILBERT~ 33:US ~31:63/166,550 ~32:26/03/2021

2023/09054 ~ Complete ~54:FERROSILICON VANADIUM AND/OR NIOBIUM ALLOY, PRODUCTION OF A FERROSILICON VANADIUM AND/OR NIOBIUM ALLOY, AND THE USE THEREOF ~71:Elkem ASA, Drammensveien 169, OSLO 0277, NORWAY, Norway ~72: HARTUNG, Cathrine;HAUNHORST, Thilo;HOEL, Eivind Gustav;KLEVAN, Ole Svein;MICHELS, Leander;OTT, Emmanuelle~ 33:NO ~31:20210412 ~32:30/03/2021

2023/09061 ~ Complete ~54:SOLAR ELECTRICITY GENERATION SYSTEM AND METHOD ~71:SRI SATYA ACQUISITIONS LLC, 3037 N Cicero Ave Chicago, United States of America ~72: NOOTIGATTU, Satyanarayana;PASPULLA, Srinivas;PRADHAN, Thomas~ 33:US ~31:17/186,337 ~32:26/02/2021

2023/09090 ~ Complete ~54:CARBOXY-BENZIMIDAZOLE GLP-1R MODULATING COMPOUNDS ~71:GILEAD SCIENCES, INC., 333 Lakeside Drive, Foster City, United States of America ~72: ARMSTRONG, MEGAN K.;BRIZGYS, GEDIMINAS J.;CASSIDY, JAMES S.;CHIN, ELBERT;CHOU, CHIENHUNG;HUNG, CHAO-I;LIN, DAVID W.;MITCHELL, MICHAEL L.;ROBERTS, EZRA;SCHROEDER, SCOTT D.;TAYLOR, JAMES G.;THOMAS-TRAN, RHIANNON;WRIGHT, NATHAN E.;YANG, ZHENG-YU~ 33:US ~31:63/177,775 ~32:21/04/2021;33:US ~31:63/285,410 ~32:02/12/2021

2023/09025 ~ Complete ~54:NEW GRAFTING METHOD OF CITRUS SEEDLING FOR BREEDING ~71:Citrus Research Institute of Zhejiang Province, No. 11 Daqiao Road, Huangyan District, Taizhou City, Zhejiang Province, People's Republic of China ~72: HUANG Xiu;KE Fuzhi;NIE Zhenpeng;SUN Lifang;WANG Luoyun~

2023/09029 ~ Complete ~54:PLANTING METHOD FOR IMPROVING FRUIT QUALITY OF COCK-TAIL GRAPEFRUIT ~71:Citrus Research Institute of Zhejiang Province, No. 11 Daqiao Road, Huangyan District, Taizhou City, Zhejiang Province, People's Republic of China ~72: HUANG Xiu;KE Fuzhi;NIE Zhenpeng;SUN Lifang;WANG Luoyun~

2023/09039 ~ Complete ~54:MANAGING REMOTE TERMINAL COMMUNICATIONS ~71:Schneider Electric (Australia) Pty Ltd., 2 Banfield Road, MACQUARIE PARK 2113, NSW, AUSTRALIA, Australia ~72: COMBER, Brett~ 33:US ~31:63/377,217 ~32:27/09/2022

2023/09045 ~ Complete ~54:PYRIDINE DERIVATIVES WITH C-LINKED CYCLIC SUBSTITUENTS AS CGAS INHIBITORS ~71:BOEHRINGER INGELHEIM INTERNATIONAL GMBH, Binger Strasse 173, Germany ~72: GNAMM, Christian;GODBOUT, Cédrickx;GROSS, Patrick;GRUNDL, Marc Alexander;HANDSCHUH, Sandra Ruth;HEIMANN, Annekatrin Charlotte;HOENKE, Christoph;KLEY, Joerg;KUTTRUFF, Christian, Andreas;REINERT, Dirk;STUBER, Raphael;THEIS, Theodor~ 33:EP ~31:21173693.9 ~32:12/05/2021;33:EP ~31:21192434.5 ~32:20/08/2021

2023/09050 ~ Complete ~54:COMPOSITION FOR PROMOTING PLANTS GROWTH AND/OR FOR PROTECTING PLANTS AGAINST AT LEAST ONE PLANT PEST AND/OR ONE PLANT DISEASE ~71:UNIVERSITE DE LIEGE, Place du 20-Août, 7 4000, Liège, Belgium;UNIVERSITE DE LILLE, Rue

Paul Duez, 42 59800, Lille, France ~72: BARBARA FIFANI;FRANK DELVIGNE;PHILIPPE JACQUES;VINCENT PHALIP~ 33:EP ~31:21166842.1 ~32:02/04/2021

. - APPLIED ON 2023/09/27 -

2023/09117 ~ Complete ~54:ELECTRONIC DEVICE COMPRISING CAMERA MODULE ~71:SAMSUNG ELECTRONICS CO., LTD., 129, Samsung-ro, Yeongtong-gu, Suwon-si, Gyeonggi-do, 16677, Republic of Korea ~72: BYUNGDUK YANG;DONGHYUN YEOM;DONGSEOP LEE;HAECHANG LEE;KWANGTAI KIM;MINSUK UHM;SUNGYOUNG SHIN~ 33:KR ~31:10-2021-0043957 ~32:05/04/2021;33:KR ~31:10-2021-0157621 ~32:16/11/2021

2023/09069 ~ Provisional ~54:NFC EXTENSION DEVICE ~71:W.R. CHRISTIE CENTURION, 93 ADRIANA CR., GATEWAY INDUSTRIAL, CENTURION, 0157, SOUTH AFRICA, South Africa ~72: CHRISTIE, Warren, James, Alexander~

2023/09085 ~ Complete ~54:A PROCESS FOR REMOVAL OF CR (VI) FROM WATER USING LIMA BEAN HUSK DERIVED ADSORBENT ~71:BHATKAR, Siraj, SCHOOL OF PETROLEUM ENGINEERING, MIT WPU, PUNE, MAHARASHTRA, 411038, India;DR. VISHWANATH KARAD MIT WORLD PEACE UNIVERSITY, MIT WORLD PEACE UNIVERSITY S.NO.124, PAUD ROAD, KOTHRUD, PUNE, MAHARASHTRA, 411038, India;KHURPADE, Pratiksha, SCHOOL OF CHEMICAL ENGINEERING, MIT WPU, PUNE, MAHARASHTRA, 411038, India;SHENOY, Vignesh, SCHOOL OF PETROLEUM ENGINEERING, MIT WPU, PUNE, MAHARASHTRA, 411038, India;TATPATE, Pallavi, SCHOOL OF CHEMICAL ENGINEERING, MIT WPU, PUNE, MAHARASHTRA, 411038, India;WADGAONKAR, Vinayak S., SCHOOL OF PETROLEUM ENGINEERING, MIT WPU, PUNE, MAHARASHTRA, 411038, India ~72: BHATKAR, Siraj;KHURPADE, Pratiksha;SHENOY, Vignesh;TATPATE, Pallavi;WADGAONKAR, Vinayak S.~

2023/09099 ~ Complete ~54:AN UNMANNED AERIAL VEHICLE FOR AGRICULTURAL PLANT PROTECTION ~71:Lu'an Xiangchuan Technology Co., Ltd., No.80 meters east of Huaibin Road and Linfeng Road, Linhuaigang Township, Huoqiu County, Lu’an City, Anhui Province, 237484, People's Republic of China ~72: Jiyun Shen;Xiuqin Hu~

2023/09068 ~ Provisional ~54:A DETECTION SYSTEM ~71:REVOLT TECHNIQUES (PTY) LTD, 2122 BEHAUNIA ESTATE, DUVHA PARK, EMALAHLENI, 1034, South Africa ~72: MDAKA, Mpimo, Archibald~

2023/09071 ~ Provisional ~54:CANNABIS INFUSED DRINKS ~71:Gerald Mandebvu, 3 Rowland Johnson street, South Africa ~72: Cannabis Infused Drinks~

2023/09091 ~ Complete ~54:USE OF LONG-ACTING GROWTH HORMONE FOR TREATING INFLAMMATION-INDUCED DISEASES ~71:ASCENDIS PHARMA A/S, TUBORG BOULEVARD 12, 2900 HELLERUP, DENMARK, Denmark ~72: KJELGAARD-HANSEN, Mads, Jens;SPROGØE, Kennett;TUXEN POULSEN, Thomas;YANG-MALTEN, Yang;ZOIS, Nora, Elisabeth~ 33:EP ~31:21166699.5 ~32:01/04/2021

2023/09100 ~ Complete ~54:A MULTIFUNCTIONAL SEEDING DEVICE FOR CHINESE MEDICINAL HERBOLOGY ~71:Lu'an Xiangchuan Technology Co., Ltd., No.80 meters east of Huaibin Road and Linfeng Road, Linhuaigang Township, Huoqiu County, Lu’an City, Anhui Province, 237484, People's Republic of China ~72: Jiyun Shen;Xiuqin Hu~

2023/09110 ~ Complete ~54:FORMULATION COMPRISING CERALASERTIB ~71:AstraZeneca AB, SÖDERTÄLJE SE-151-85, SWEDEN, Sweden ~72: REN, Haixia;SIMPSON, David Bradley Brook~ 33:IB ~31:2021/081978 ~32:22/03/2021

2023/09075 ~ Complete ~54:METHOD FOR UTILIZING GRAPHITE ORE RESOURCES ~71:China University of Geosciences (Beijing), No.29 Xueyuan Road, Haidian district, Beijing city, 100083, People's Republic of China ~72: DI Xiangyun;WANG Xinke;ZHANG Na;ZHANG Shuai;ZHANG Yihe~

2023/09106 ~ Complete ~54:COMPOSITIONS AND METHODS FOR INHIBITING NUCLEAR RECEPTOR SUBFAMILY 1 GROUP H MEMBER 3 (NR1H3) EXPRESSION ~71:Dicerna Pharmaceuticals, Inc., 75 Hayden Avenue, LEXINGTON 02421 , MA, USA, United States of America;Novo Nordisk A/S, Novo Allé, BAGSVÆRD 2880, DENMARK, Denmark ~72: ANDERSEN, Birgitte;DUDEK, Henryk;LATTA, Markus Robert;PURSELL, Natalie Wayne;SAXENA, Utsav;SPIEGELMAN, Nicole Alexis~ 33:US ~31:63/176,814 ~32:19/04/2021;33:EP ~31:21186366.7 ~32:19/07/2021;33:EP ~31:21213711.1 ~32:10/12/2021

2023/09109 ~ Complete ~54:METHOD FOR DRY-FORMING CELLULOSE PRODUCTS FROM A CELLULOSE BLANK STRUCTURE IN A PRODUCT FORMING UNIT AND A PRODUCT FORMING UNIT ~71:PulPac AB, Amalia Jönssons gata 16, VÄSTRA FRÖLUNDA 421 31 , SWEDEN, Sweden ~72: ARLEROT, Björn;GUIDOTTI, Edward;HÖGBLOM, Olle;LARSSON, Ove;LARSSON, Patrik;LJUNGBERG, Martin~ 33:IB ~31:2021/059810 ~32:15/04/2021;33:IB ~31:2021/059811 ~32:15/04/2021;33:SE ~31:2151618-2 ~32:23/12/2021

2023/09116 ~ Complete ~54:MULTISPECIFIC BINDING MOIETIES COMPRISING NOVEL PD-1 BINDING DOMAINS ~71:INCYTE CORPORATION, 1801 Augustine Cut-Off, Wilmington, Delaware, 19803, United States of America;MERUS N.V., Uppsalalaan 17 3rd & 4th Floor 3584 CT Utrecht, Netherlands ~72: HORACIO G NASTRI;PATRICK MAYES;SHAUN M STEWART;SIMON EDWARD PLYTE~ 33:NL ~31:2027893 ~32:31/03/2021

2023/09073 ~ Complete ~54:NETWORK DYNAMIC EVOLUTION SYSTEM OF SOCIAL NETWORK ANALYSIS AND RANDOM ACTOR MODEL ~71:Shanghai Maritime University, 1550 Haigang Avenue, Pudong New Area, Shanghai City, People's Republic of China ~72: CHEN Liu;CUI Qing'an;XIAO Guangnian~

2023/09093 ~ Complete ~54:L-AMINO-ACID-PRODUCING CORYNEBACTERIUM SP. MICROORGANISM, AND METHOD FOR PRODUCING L-AMINO ACIDS BY USING SAME ~71:CJ CHEILJEDANG CORPORATION, 330, DONGHO-RO, JUNG-GU, SEOUL 04560, REP OF KOREA, Republic of Korea ~72: BAEK, Mina;CHOI, Woosung;JANG, Jaewon;LEE, Kwang Woo~ 33:KR ~31:10-2021-0051233 ~32:20/04/2021

2023/09097 ~ Complete ~54:AUTOMATED MACHINE-ASSISTED DETECTION OF DRY EYE DISEASE CONDITIONS IN HUMAN EYES CAPTURED USING DIGITAL CAMERA SYSTEMS ~71:CORNEACARE, INC., 400 Walnut Street, Apt. 6f Philadelphia, United States of America ~72: MURRY, Carl, Van Alen;SINGH, Ranjodh~ 33:US ~31:17/220,535 ~32:01/04/2021

2023/09111 ~ Complete ~54:BIFUNCTIONAL DEGRADERS OF GALACTOSE-DEFICIENT IMMUNOGLOBULINS ~71:Biohaven Therapeutics Ltd., 215 Church Street, NEW HAVEN 06510, CT, USA, United States of America ~72: CALDWELL, Reese M.;DUBOWCHIK, Gene M.;SPIEGEL, David~ 33:US ~31:63/159,383 ~32:10/03/2021

2023/09095 ~ Complete ~54:COMMUNICATION DEVICE AND COMMUNICATION METHOD ~71:PANASONIC INTELLECTUAL PROPERTY CORPORATION OF AMERICA, 2050 W 190TH STREET SUITE 450, TORRANCE, CA 90504, USA, United States of America ~72: HORIUCHI, Ayako;KANG, Yang;SUZUKI, Hidetoshi~ 33:JP ~31:2021-055903 ~32:29/03/2021

2023/09112 ~ Complete ~54:MULTICROP HARVESTING HEAD ~71:Bioceres Group Plc, Highdown House, Yeoman Way, WORTHING WEST BN99 3HH, SUSSEX, UNITED KINGDOM, United Kingdom;G FAS SAS,

Tucumán 540, Floor 5° J, BUENOS AIRES 1049, ARGENTINA, Argentina ~72: FERNÁNDEZ MOUJÁN, Ana~ 33:AR ~31:P20210100777 ~32:29/03/2021

2023/09065 ~ Provisional ~54:SOLUTION FOR ELECTRICITY STREET LIGHTS AND TRAFFIC LIGHTS AND PREVENT OF CABLE THEFT IN SOUTH AFRICA ~71:G.J CLOETE, 112 Nothdene st, South Africa ~72: G.J CLOETE;G.J.CLOETE~

2023/09120 ~ Complete ~54:COMPOSITIONS AND METHODS FOR THE TREATMENT OF ALOPECIA ~71:FOLLEA INTERNATIONAL, 17780 Fitch, Suite 200, Irvine, California, 92614, United States of America ~72: OFER A GOREN~ 33:US ~31:63/485,333 ~32:16/02/2023;33:US ~31:63/488,045 ~32:02/03/2023;33:US ~31:63/490,939 ~32:17/03/2023

2023/09066 ~ Provisional ~54:RE -ROUTED/DIRECT OF TRAFFIC ON THE FREEWAY : ~71:G.J.CLOETE, 112 Nothdene st, South Africa ~72: G.J.CLOETE~

2023/09074 ~ Complete ~54:A DUAL-BAND COMBUSTIBLE GAS CONCENTRATION DETECTION SYSTEM ~71:Lingnan Normal University, No.29, Cunjin Road, Chikan District, Zhanjiang City, Guangdong province, 524048, People's Republic of China ~72: Jinfang LIU~

2023/09094 ~ Complete ~54:RARE-EARTH CATALYSED POLYISOPRENE ARTICLES ~71:LIFESTYLES HEALTHCARE PTE. LTD., 30 CECIL STREET, 19 -08 PRUDENTIAL TOWER, SINGAPORE 049712, SINGAPORE, Singapore ~72: BOONBUMRUNG, Atip;NETRUNG, Chintana;NGOWPRASERT, Chayapon;NGUYEN, Kc;RABINGKAO, Phetcharat~ 33:US ~31:63/155,959 ~32:03/03/2021;33:AU ~31:2022900058 ~32:12/01/2022

2023/09096 ~ Complete ~54:MEASUREMENT OF THERAPEUTIC PROTEINS CO-ADMINISTERED TO A SUBJECT BY LC-MRM-MS ASSAY ~71:REGENERON PHARMACEUTICALS, INC., 777 Old Saw Mill River Road, Tarrytown, United States of America ~72: MAO, Yuan;ZHONG, Xuefei~ 33:US ~31:63/172,567 ~32:08/04/2021;33:US ~31:63/224,952 ~32:23/07/2021

2023/09124 ~ Provisional ~54:DIVIDER BOX ~71:MARTHINUS JORDAAN NORTJE, 76 HAMILTON ROAD, CLAREMONT, CAPE TOWN, South Africa ~72: MARTHINUS JORDAAN NORTJE~

2023/09067 ~ Provisional ~54:A HOUSING ~71:HYTRONIC (PTY) LTD, CORNER OF STANLEY AND MAX STREETS, KNIGHTS, GERMISTON, 1401, GAUTENG, SOUTH AFRICA, South Africa ~72: SOUVARIS, Donovan, Donald~

2023/09072 ~ Provisional ~54:WATER FILTRATION ASSEMBLY ~71:UNIVERSITY OF SOUTH AFRICA, 1 PRELLER STREET MUCKLENEUK RIDGE, South Africa ~72: GUMBI, Nozipho;MAMBA, Bheki;NXUMALO, Edward;PEDZISA, Stanford;ZIKALALA, Sithembela~

2023/09077 ~ Complete ~54:DRILLING MONITORING SYSTEM ~71:HOLTZHAUSEN, Johann, Andre, RONDEVOUX 1, 13 KUISIS ROAD PRETORIA, BRUMMERIA X 16, 0184, SOUTH AFRICA, South Africa;THERON, Riaan, Dawid, PERSEEL 4, GARIEP NEDERSETTING, !KHEIS MUNISIPALITEIT, GROOTDRINK, 8822, SOUTH AFRICA, South Africa ~72: HOLTZHAUSEN, Johann, Andre;THERON, Riaan, Dawid~ 33:ZA ~31:2022/09010 ~32:12/08/2022

2023/09092 ~ Complete ~54:MAGNETIC SEPARATION OF PARTICLES SUPPORTED BY SPECIFIC SURFACTANTS ~71:BASF SE, CARL BOSCH STRASSE 38, 67056 LUDWIGSHAFEN AM RHEIN, GERMANY, Germany ~72: ETTMUELLER, Dieter;JOHN, Petra;KUHN, Oliver;ROHDE, Wolfgang~ 33:EP ~31:21160885.6 ~32:05/03/2021

2023/09098 ~ Complete ~54:GLUCAGON LIKE PEPTIDE COMPOUNDS ~71:NOVARTIS AG, Lichtstrasse 35, Switzerland ~72: BEAULIEU, Valerie;GALYAN, Keith;GAO, Jinhai;GINSBURG-MORAFF, Carol;JAIN, Pankaj;MARCINKEVICIENE, Jovita;MARRO, Martin;MICHAEL, Walter;MOGI, Muneto;PATEL, Sejal;PLUMMER, Scott;SINGH, Alok;USERA, Aimee~ 33:EP ~31:21169757.8 ~32:21/04/2021

2023/09118 ~ Complete ~54:NOVEL PD-1 BINDING DOMAINS ~71:INCYTE CORPORATION, 1801 Augustine Cut-Off, Wilmington, Delaware, 19803, United States of America;MERUS N.V., Uppsalalaan 17 3rd & 4th Floor 3584 CT Utrecht, Netherlands ~72: HORACIO G NASTRI;PATRICK MAYES;REBECCA A BUONPANE;SHAUN M STEWART;SIMON EDWARD PLYTE~ 33:NL ~31:2027892 ~32:31/03/2021

2023/09079 ~ Complete ~54:A SOIL SAMPLING DEVICE FOR TESTING SOLIDIFICATION CONSTRUCTION ~71:China Railway Seventh Group Guangzhou Engineering Co., Ltd., No. 841-850 of Building H6 and 801-820 of Building H7, No. 39, Ruihe Road, Huangpu District, Guangzhou City, Guangdong Province, 510700, People's Republic of China ~72: Bin Tang;Geping Zhang;Junlong Zu;Lei Peng;Lu Jia;Miaodi Zhang;Shiliang Du;Tong Niu;Wentao Zhi;Xu Wu;Zhanhu Fu;Zhan'ao Shi~ 33:CN ~31:202321573275.5 ~32:19/06/2023

2023/09088 ~ Complete ~54:A MODULAR UNMANNED GROUND VEHICLE WITH MULTI-MODAL SENSING AND CONTROL CAPABILITIES ~71:AHER, Jaideep Vinod, SCHOOL OF ELECTRONICS AND COMMUNICATION ENGINEERING, DR. VISHWANATH MIT WORLD PEACE UNIVERSITY, PUNE, MAHARASHTRA, 411038, India;BARVE, Shivprakash B., SCHOOL OF MECHANICAL ENGINEERING, DR. VISHWANATH MIT WORLD PEACE UNIVERSITY, PUNE, MAHARASHTRA, 411038, India;DR.VISHWANATH KARAD MIT WORLD PEACE UNIVERSITY, MIT WORLD PEACE UNIVERSITY S.NO.124, PAUD ROAD, KOTHRUD, PUNE, MAHARASHTRA, 411038, India;GADEKAR, Abhijit Suresh, SCHOOL OF ELECTRONICS AND COMMUNICATION ENGINEERING, DR. VISHWANATH MIT WORLD PEACE UNIVERSITY, PUNE, MAHARASHTRA, 411038, India;PATEL, Vibha, SCHOOL OF ELECTRONICS AND COMMUNICATION ENGINEERING, DR. VISHWANATH MIT WORLD PEACE UNIVERSITY, PUNE, MAHARASHTRA, 411038, India ~72: AHER, Jaideep Vinod;BARVE, Shivprakash B.;GADEKAR, Abhijit Suresh;PATEL, Vibha~

2023/09103 ~ Complete ~54:DEVICE AND METHOD FOR HEAT-TREATING A METAL STRIP ~71:ANDRITZ TECHNOLOGY AND ASSET MANAGEMENT GMBH, Stattegger Strasse 18, Austria ~72: Jürgen ZIEMENDORFF;Martin HAMMAN~ 33:AT ~31:A50422/2021 ~32:27/05/2021

2023/09107 ~ Complete ~54:LENTIVIRAL VECTORS TARGETING ANTIGENS TO MHC-II PATHWAY AND INDUCING PROTECTIVE CD8+ AND CD4+ T-CELL IMMUNITY IN A HOST ~71:Institut Pasteur, 25-28, rue du Docteur Roux, PARIS CEDEX 15 75724, FRANCE, France;Theravectys, Bâtiment Pasteur Biotop, 28 rue du Docteur Roux, PARIS CEDEX 15 75724, FRANCE, France ~72: ANNA, François;BLANC, Catherine;CHARNEAU, Pierre;LOPEZ, Jodie;MAJLESSI, Laleh;MONCOQ, Fanny~ 33:EP ~31:21305317.6 ~32:12/03/2021

2023/09115 ~ Complete ~54:POLYMORPHIC FORMS OF COMPOUND AND PREPARATION METHOD THEREFOR AND APPLICATION THEREOF ~71:SHANGHAI MEIYUE BIOTECH DEVELOPMENT CO., LTD., 3333 Shenjiang Road, Building 1 Floor 5, Block A, Pudong New District Shanghai, 200120, People's Republic of China ~72: CHAODONG WANG;GUOZHONG YE;LINBO LUAN;YONG TIAN;YONGKAI CHEN;ZONGGUO SUN~ 33:CN ~31:202110297078.4 ~32:19/03/2021

2023/09082 ~ Complete ~54:METHOD FOR GENETIC IMPROVEMENT ON RICE BLAST RESISTANCE OF RICE THERMOSENSITIVE GENIC MALE STERILE LINE ~71:RICE RESEARCH INSTITUTE, GUANGDONG ACADEMY OF AGRICULTURAL SCIENCES, NO. 3, JINYING EAST 1ST STREET, People's Republic of China ~72: CHEN, Pingli;CHEN, Wenfeng;FAN, Zhilan;JIANG, Liqun;LI, Chen;LIU, Qing;LV, Shuwei;MAO, Xingxue;SUN, Bingrui;WANG, Yufu;YU, Hang;ZHANG, Jing~

2023/09086 ~ Complete ~54:A PRECAST SINGLE TEE GIRDER WITH GLASS FIBER REINFORCED POLYMER IN BRIDGE CONSTRUCTION ~71:DR. VISHWANATH KARAD MIT WORLD PEACE UNIVERSITY, MIT WORLD PEACE UNIVERSITY S.NO.124, PAUD ROAD, KOTHRUD, PUNE, MAHARASHTRA, 411038, India;MINDE, Pravin, SCHOOL OF CIVIL ENGINEERING, DR. VISHWANATH MIT WORLD PEACE UNIVERSITY, PUNE, MAHARASHTRA, 411038, India;SAOJI, Atharva, SCHOOL OF CIVIL ENGINEERING, DR. VISHWANATH MIT WORLD PEACE UNIVERSITY, PUNE, MAHARASHTRA, 411038, India;YADHAV, Adinath D., SCHOOL OF CIVIL ENGINEERING, DR. VISHWANATH MIT WORLD PEACE UNIVERSITY, PUNE, MAHARASHTRA, 411038, India ~72: MINDE, Pravin;SAOJI, Atharva;YADHAV, Adinath D.~

2023/09105 ~ Complete ~54:REACTOR CORE SYSTEM AND GAS-COOLED MICRO REACTOR ~71:China Nuclear Power Engineering Co., Ltd., No. 117 West Third Ring North Road, Haidian District, BEIJING 100840, CHINA (P.R.C.), People's Republic of China ~72: DONG, Jianhua;HE, Kai;LI, Yunlong;LIU, Guoming;XIAO, Huiwen;YAO, Hong;YUAN, Yuan;ZHANG, Chenglong;ZHANG, Shuoting;ZHU, Siyang~ 33:CN ~31:202110333122.2 ~32:29/03/2021

2023/09114 ~ Complete ~54:A CRUSHER BELT TENSIONING APPARATUS ~71:Sandvik Ltd, 2 Tullyvannon Road, Ballygawley, DUNGANNON BT70 2HW, TYRONE, UNITED KINGDOM, United Kingdom ~72: BAXTER, Adam~ 33:EP ~31:21167644.0 ~32:09/04/2021

2023/09119 ~ Complete ~54:A SYSTEM AND METHODS FOR COMMUNICATION OF SENSOR DATA AND/OR USER CONTROL DATA ~71:MUNTERS EUROPE AKTIEBOLAG, Box 1150, 164 26, Kista, Sweden ~72: EHSAN ZAMOON;SAMUEL VESTLIN~ 33:SE ~31:2150250-5 ~32:04/03/2021

2023/09123 ~ Complete ~54:HYDROFORMYLATION PROCESSES ~71:DOW TECHNOLOGY INVESTMENTS LLC, 2211 H.H. Dow Way Midland, United States of America ~72: GILES, Jason F.;Glenn A. MILLER~ 33:US ~31:63/168,483 ~32:31/03/2021

2023/09080 ~ Complete ~54:A PROTECTION DEVICE FOR CRUSHING A LARGE SINGLE STONE IN A PIPE JACKING ~71:China Railway Seventh Engineering Bureau Group Guangzhou Engineering CO., LTD., H7 Building, 841-850, H6 Building, 801-820, No.39, Ruihe Road, Huangpu District, Guangzhou City, Guangdong Province, 510535, People's Republic of China;China Railway Seventh Group CO., LTD., No, 1225, Hanghai East Road, Guancheng Hui District, Zhengzhou City, Henan Province, 450016, People's Republic of China ~72: Chun Zhou;Fan Zhang;Hang Zheng;Lungao Cui;Minmin Wei;Qifeng Luo~ 33:CN ~31:202322277987.9 ~32:24/08/2023

2023/09087 ~ Complete ~54:A SOLAR POWERED ELECTRIC VEHICLE ENHANCEMENT SYSTEM ~71:CHOPDA, Chirag, SCHOOL OF MECHANICAL ENGINEERING, DR. VISHWANATH MIT WORLD PEACE UNIVERSITY, PUNE, MAHARASHTRA, 411038, India;DR. VISHWANATH KARAD MIT WORLD PEACE UNIVERSITY, MIT WORLD PEACE UNIVERSITY S.NO.124, PAUD ROAD, KOTHRUD, PUNE, MAHARASHTRA, 411038, India;HIWALE, Anil S., SCHOOL OF ELECTRONICS AND COMMUNICATION ENGINEERING, DR. VISHWANATH MIT WORLD PEACE UNIVERSITY, PUNE, MAHARASHTRA, 411038, India;NARKHEDE, Gaurav G., SCHOOL OF ELECTRONICS AND COMMUNICATION ENGINEERING, DR. VISHWANATH MIT WORLD PEACE UNIVERSITY, PUNE, MAHARASHTRA, 411038, India;PATIL, Abhishek, SCHOOL OF ELECTRONICS AND COMMUNICATION ENGINEERING, DR. VISHWANATH MIT WORLD PEACE UNIVERSITY, PUNE, MAHARASHTRA, 411038, India;SHENDKAR, Mayuresh, SCHOOL OF ELECTRONICS AND COMMUNICATION ENGINEERING, DR. VISHWANATH MIT WORLD PEACE UNIVERSITY, PUNE, MAHARASHTRA, 411038, India ~72: CHOPDA, Chirag;HIWALE, Anil S.;NARKHEDE, Gaurav G.;PATIL, Abhishek;SHENDKAR, Mayuresh~

2023/09104 ~ Complete ~54:DESIGN METHOD AND APPARATUS FOR CONTAINMENT INTEGRITY TEST OF ADVANCED PRESSURIZED WATER REACTOR NUCLEAR POWER PLANT ~71:China Nuclear Power Engineering Co., Ltd., No. 117 West Third Ring North Road, Haidian District, BEIJING 100840, CHINA (P.R.C.), People's Republic of China ~72: CHEN, Wei;DU, Yu;LIU, Yong;SHANG, Chen;SUN, Tao;TIAN, Qiwei;WU, Xipan;XING, Ji;YANG, Xiaoyan;ZHAO, Xia;ZHENG, Shijian~ 33:CN ~31:202110312538.6 ~32:24/03/2021

2023/09083 ~ Complete ~54:SYSTEMS AND METHODS FOR PREDICTING RESPONSE TO ORAL MINOXIDIL FOR THE TREATMENT OF ANDROGENETIC ALOPECIA ~71:FOLLEA INTERNATIONAL, 17780 Fitch, Suite 200, Irvine, California, 92614, United States of America ~72: OFER A GOREN~ 33:US ~31:63/512,137 ~32:06/07/2023;33:US ~31:18/240,485 ~32:31/08/2023

2023/09101 ~ Complete ~54:A WEEDING DEVICE FOR RICE PLANTING ~71:Lu'an Xiangchuan Technology Co., Ltd., No.80 meters east of Huaibin Road and Linfeng Road, Linhuaigang Township, Huoqiu County, Lu’an City, Anhui Province, 237484, People's Republic of China ~72: Jiyun Shen;Xiuqin Hu~

2023/09070 ~ Provisional ~54:AN ELECTRICITY DISTRIBUTION NETWORK PROTECTION SYSTEM ~71:VAN HEERDEN, Anton, 12 Ripplemead Road, Nahoon Valley Park, South Africa ~72: VAN HEERDEN, Anton~

2023/09076 ~ Complete ~54:A LIFE CYCLE DETECTION DEVICE FOR FIXED WING LIGHT SPORT AIRCRAFT ~71:Zhengzhou University of Aeronautics, No. 2 Daxue Middle Road, Erqi District, Zhengzhou, People's Republic of China ~72: Fu Shuai;Guo Xinyao;Li Junyan;Si Qingmin;Zhao Yonghang~

2023/09084 ~ Complete ~54:METHOD FOR RAPID SEEDLING FORMATION AND PROPAGATION OF PRUNUS AVIUM L. ROOTSTOCK TISSUE CULTURE SEEDLINGS ~71:Shandong Institute of Pomology, No. 64, Longtan Road, Tai'an, Shandong, 271000, People's Republic of China ~72: Tan Yue;Wei Hairong;Xu Li;Zhu Min~ 33:CN ~31:202311121224.3 ~32:01/09/2023

2023/09113 ~ Complete ~54:CHIMERIC RECEPTORS TARGETING ADGRE2 AND/OR CLEC12A AND USES THEREOF ~71:Memorial Hospital for Cancer and Allied Diseases, 1275 York Avenue, NEW YORK 10065, NY, USA, United States of America;Memorial Sloan-Kettering Cancer Center, 1275 York Avenue, NEW YORK 10065, NY, USA, United States of America;Millennium Pharmaceuticals, Inc., 40 Landsdowne Street, CAMBRIDGE 02139, MA, USA, United States of America;Sloan-Kettering Institute for Cancer Research, 1275 York Avenue, NEW YORK 10065, NY, USA, United States of America ~72: HAUBNER, Sascha P.;HE, Xingyue;MANSILLA-SOTO, Jorge;SADELAIN, Michel;SHAPIRO, Gary~ 33:US ~31:63/179,799 ~32:26/04/2021;33:US ~31:63/287,655 ~32:09/12/2021

2023/09121 ~ Complete ~54:COMPOSITIONS AND METHODS FOR AN ORAL SUPPLEMENT TO ORAL MINOXIDIL FOR THE TREATMENT OF ALOPECIA ~71:FOLLEA INTERNATIONAL, 17780 Fitch, Suite 200, Irvine, California, 92614, United States of America ~72: OFER A GOREN~

2023/09078 ~ Complete ~54:CORE-MAKING METHOD FOR ENHANCED COOLING OF 100-TON DUCTILE IRON CONTAINER CASTING ~71:Zhengzhou Research Institute of Mechanical Engineering Co., Ltd., No. 149, Science Avenue, High-tech Industrial Development Zone, Zhengzhou, Henan Province, 450000, People's Republic of China ~72: CHEN, Zhao;CUI, Yu;LI, Kerui;LI, Tong;LI, Zengli;WEI, Donghai~ 33:CN ~31:202211672453.X ~32:26/12/2022

2023/09081 ~ Complete ~54:A COMPREHENSIVE EVALUATION METHOD FOR WATER INRUSH RISK OF BED-SEPARATION WATER DISASTER BASED ON CLOUD MODEL ~71:Guizhou University of Engineering Science, Xueyuan Road, Qixingguan District, Bijie City, Guizhou Province, 551700, People's Republic of China ~72: Jing Gao;Suguo Huang;Wei Xiong;Yilei Liu;Zhu Gao~

2023/09089 ~ Complete ~54:A COMPOSITE OLIGOMERIC POLYSACCHARIDE AND AN APPLICATION THEREOF ~71:KANGZIN BIOTECHNOLOGY (BEIJING) CO., LTD., Room 202, 2 / F, Building 7, Yard 7, Yongxing Road, Daxing District, People's Republic of China ~72: KANG, Shengli;KANG, Zifan;SU, Huashan;SU, Mengzi;SU, Tongxing~ 33:CN ~31:2023108092509 ~32:04/07/2023

2023/09102 ~ Complete ~54:A PHYSICAL STRENGTH TRAINING DEVICE FOR PHYSICAL TRAINING ~71:TaiShan University, No. 525, Dongyue Avenue, Daiyue District, Tai'an City, Shandong Province, 271000, People's Republic of China ~72: Dayang Zhang;Qinsheng Li~

2023/09108 ~ Complete ~54:WEAR ASSEMBLY ~71:ESCO Group LLC, 2141 NW 25th Avenue, PORTLAND 97210-2578, OR, USA, United States of America ~72: LEEDHAM, Cameron R.;ROSKA, Michael B.;STANGELAND, Kevin S.;ZENIER, Scott H.~ 33:US ~31:63/160,408 ~32:12/03/2021

2023/09122 ~ Complete ~54:FERTILIZING AND WATERING DEVICE BASED ON AGRICULTURAL INTERNET OF THINGS TECHNOLOGY ~71:Anhui Zhongke Zhixin Environmental Technology Co., Ltd., Building A7, Lu'an University Science And Technology Park, Sanshipu Town, Jin'an District, Lu'an City, People's Republic of China ~72: GAO, Huiyi;SONG, Zhichao~

. - APPLIED ON 2023/09/28 -

2023/09125 ~ Provisional ~54:CIRCUMCISION DEVICE ~71:Tanya Gabel and Iris Gabel, 10 Fiford Crescent, South Africa ~72: Iris Gabel;Tanya Gabel~

2023/09127 ~ Provisional ~54:A SPLIT SET ~71:HOLFELD, Barry Graeme, 1207 Schooner Avenue, Laser Park, Ext. 9, Roodepoort,, South Africa ~72: HOLFELD, Barry Graeme~

2023/09129 ~ Provisional ~54:PROCESS FOR THE STABILISING OF ALCOHOLIC BEVERAGES, DERIVATIVES AND PRECURSORS THEREOF ~71:STONE TREE INTERNATIONAL LIMITED, 71-75 Shelton Street, Convent Garden, United Kingdom ~72: Paul Bertus HAYES;Timothy John BOND~

2023/09132 ~ Complete ~54:AN ULTRA-HIGH-PERFORMANCE FIBER-REINFORCED CONCRETE (UHPFRC) FOR ENERGY-EFFICIENT AND ECO-FRIENDLY STRUCTURAL APPLICATIONS ~71:Hunan University of Technology, No.88, Taishan West Road, Tianyuan District, Zhuzhou, People's Republic of China ~72: Bincheng Yuan;Xuemei Zhou;Yichuan Wang;Zhaochao Li;Zhe Zhang~

2023/09161 ~ Complete ~54:NOVEL LIPOCALIN MUTEINS SPECIFIC FOR CONNECTIVE TISSUE GROWTH FACTOR (CTGF) ~71:PIERIS PHARMACEUTICALS GMBH, Zeppelinstrasse 3, Germany ~72: GRUENER, Stefan;HANSBAUER, Eva-Maria;HERRMANN, Tanja;JAQUIN, Thomas;MATSCHINER, Gabriele;NEIENS, Vanessa;PAVLIDOU, Marina;WURZENBERGER, Claudia~ 33:EP ~31:21167385.0 ~32:08/04/2021;33:EP ~31:21192311.5 ~32:20/08/2021

2023/09133 ~ Complete ~54:A STRENGTHENING STRUCTURE AND A CONSTRUCTION METHOD UTILIZING ULTRA-HIGH-PERFORMANCE CONCRETE FOR REPAIRING CORRODED MAIN BEAM ENDS OF STEEL BRIDGE ~71:Hunan University of Technology, No.88, Taishan West Road, Tianyuan District, Zhuzhou, People's Republic of China ~72: Mengqin Wu;Yichuan Wang;Zhaochao Li;Zhe Zhang~

2023/09162 ~ Complete ~54:CHROMOSOME INTERACTION MARKERS ~71:Oxford BioDynamics PLC, Building 3140, Oxford Business Park, United Kingdom ~72: AKOULITCHEV, Alexandre;HUNTER, Ewan;RAMADASS, Aroul Selvam~ 33:US ~31:63/156,659 ~32:04/03/2021;33:US ~31:63/282,284 ~32:23/11/2021

2023/09134 ~ Complete ~54:MINERAL FIBRE PRODUCT ~71:ROCKWOOL A/S, Hovedgaden 584, 2640, Hedehusene, Denmark ~72: DORTE BARTNIK JOHANSSON;MIROSLAV NIKOLIC~ 33:EP ~31:PCT/EP2020/059651 ~32:03/04/2020

2023/09146 ~ Complete ~54:ESTIMATION OF A CROP COEFFICIENT VECTOR BASED ON MULTISPECTRAL REMOTE SENSING ~71:THE STATE OF ISRAEL, MINISTRY OF AGRICULTURE & RURAL DEVELOPMENT AGRICULTURAL RESEARCH ORGANIZATION (ARO) (VOLCANI INSTITUTE), The Volcani Center, P.O.B 15159, 7528809, Israel ~72: KAPLAN, Grigorii;ROZENSTEIN, Offer;TANNY, Josef~ 33:US ~31:63/154,737 ~32:28/02/2021;33:WO ~31:PCT/IB2022/051748 ~32:28/02/2022

2023/09148 ~ Complete ~54:GAS-COOLED MICRO-REACTOR CORE AND GAS-COOLED MICRO-REACTOR ~71:China Nuclear Power Engineering Co., Ltd., No. 117 West Third Ring North Road, Haidian District, BEIJING 100840, CHINA (P.R.C.), People's Republic of China ~72: LIU, Guoming;WANG, Jun;YUAN, Yuan;ZHANG, Chenglong~ 33:CN ~31:202110332498.1 ~32:29/03/2021

2023/09126 ~ Provisional ~54:AUTOMATED CASH FLOW MANAGEMENT SYSTEM AND METHOD ~71:PERPETUAL GROWTH, UNIT 757 POLOFIELDS LIFESTYLE, South Africa ~72: MAKASUELA MAXWELL MOJAPELO;NOKUTHULA PETUNIA MOJAPELO~

2023/09135 ~ Complete ~54:MOBILITY MANAGEMENT METHOD, TERMINAL, AND BASE STATION ~71:Huawei Technologies Co., Ltd., Huawei Administration Building, Bantian, Longgang District, SHENZHEN 518129, GUANGDONG, CHINA (P.R.C.), People's Republic of China ~72: LI, Bingzhao;LIU, Weihua;QUAN, Wei;ZHANG, Jian~ 33:IB ~31:2015/100336 ~32:31/12/2015

2023/09143 ~ Complete ~54:METHOD FOR CONTROLLING PROTEIN DIMERIZATION USING AN INTRAMOLECULAR TO INTERMOLECULAR CONFORMATIONAL SWITCH ~71:BRIGHAM YOUNG UNIVERSITY, Technology Transfer Dept., United States of America ~72: HILL, Jonathon T.~ 33:US ~31:63/200,428 ~32:05/03/2021

2023/09150 ~ Complete ~54:ANTIBODY AGAINST NKP46 AND APPLICATION OF ANTIBODY ~71:Shanghai Qilu Pharmaceutical Research and Development Centre Ltd., Building 1, No. 576 Li Bing Road, No. 56 Faraday Road, Pilot Free Trade Zone, SHANGHAI 201203, PUDONG NEW AREA, CHINA (P.R.C.), People's Republic of China ~72: GU, Jinming;YANG, Liuqing~ 33:CN ~31:202110243601.5 ~32:05/03/2021

2023/09152 ~ Complete ~54:STAPHYLOCOCCUS AUREUS VACCINE COMPOSITIONS ~71:Janssen Pharmaceuticals, Inc., 1125 Trenton-Harbourton Rd., TITUSVILLE 08560, NJ, USA, United States of America;New York University, 70 Washington Square South, NEW YORK 10012, NY, USA, United States of America ~72: BUCKLEY, Peter T.;GEURTSEN, Jeroen;KONSTANTINOV, Sergey;LUO, Jinquan;MORROW, Brian;POOLMAN, Jan Theunis;SOMANI, Sandeep;TORRES, Victor J.~ 33:US ~31:63/170,089 ~32:02/04/2021;33:US ~31:63/249,452 ~32:28/09/2021

2023/09158 ~ Complete ~54:MODULATION OF ANTIBODY-DEPENDENT CELLULAR CYTOTOXICITY ~71:SEAGEN INC., 21823 30th Drive SE, Bothell, Washington, 98021, United States of America ~72: CHRISTOPHER I LEISKE;MATTHEW R LEVENGOOD;NOAH A BINDMAN;PHILIP MOQUIST~ 33:US ~31:63/177,218 ~32:20/04/2021

2023/09131 ~ Complete ~54:USE OF TNFSF15 PROTEIN AND PHARMACEUTICALLY ACCEPTABLE AUXILIARY MATERIALS IN PREPARING MEDICINES FOR TREATING LUNG CANCER ~71:Nankai University, No.38 Tongyan Road, Jinnan District, Tianjin, 300350, People's Republic of China ~72: LI Luyuan;ZHANG Qiangzhe~

2023/09145 ~ Complete ~54:ENERGY STORAGE DEVICE ~71:XIAMEN HITHIUM ENERGY STORAGE TECHNOLOGY CO., LTD., 201-1, Comprehensive Building 5, No. 11, Butang Middle Road,, People's Republic of China ~72: HUO, Qiqi~ 33:CN ~31:202211438939.7 ~32:17/11/2022

2023/09151 ~ Complete ~54:USE OF LUVADAXISTAT FOR THE TREATMENT OF COGNITIVE IMPAIRMENT ~71:Neurocrine Biosciences, Inc., 12780 El Camino Real, SAN DIEGO 92130, CA, USA, United States of America;Takeda Pharmaceutical Company Limited, 1-1, Doshomachi 4-chome, Chuo-ku, OSAKA-SHI 541-0045, OSAKA, JAPAN, Japan ~72: BRAR, Satjit Singh;DEMARTINIS, Nicholas;DUNAYEVICH, Eduardo;FUREY, Maura L.;GE, Tingting;HAREL, Brian;MACEK, Thomas A.;O'DONNELL, Patricio;PATHI JAGANNATHAM, Naga Venkatesha Murthy;SINGH, Jaskaran B.~ 33:US ~31:63/200,327 ~32:01/03/2021;33:US ~31:63/229,945 ~32:05/08/2021;33:US ~31:63/264,747 ~32:01/12/2021;33:US ~31:63/265,628 ~32:17/12/2021

2023/09155 ~ Complete ~54:USEFUL HYDROCARBON PRODUCTION METHOD AND USEFUL HYDROCARBON PRODUCTION DEVICE ~71:FURUKAWA ELECTRIC CO., LTD., 6-4, Otemachi 2-chome, Chiyoda-ku, Tokyo, 1008322, Japan ~72: MASAYUKI FUKUSHIMA;TAKASHI FUJIKAWA;TOMOHIKO MORI;YUICHIRO BANBA;YUKI IWANO;YUKI KAWAMATA~ 33:JP ~31:2021-060916 ~32:31/03/2021

2023/09156 ~ Complete ~54:PATHOGEN MOIETIES AND USES THEREOF ~71:GRIFFITH UNIVERSITY, 170 Kessels Road, Nathan, Queensland, 4111, Australia;UNIVERSITY OF IOWA RESEARCH FOUNDATION, 200 South Capitol Street 2660 University Capitol Centre, Iowa City, Iowa, 52242, United States of America ~72: EVGENY SEMCHENKO;FREDA (EN-CHI) JEN;KATE SEIB;MICHAEL APICELLA;MICHAEL JENNINGS;MILTON KIEFEL~ 33:US ~31:63/161,399 ~32:15/03/2021

2023/09159 ~ Complete ~54:AMINO-SUBSTITUTED HETEROCYCLES FOR TREATING CANCERS WITH EGFR MUTATIONS ~71:NUVALENT, INC., One Broadway, 14th Floor, Cambridge, Massachusetts, 02142, United States of America ~72: ANUPONG TANGPEERACHAIKUL;BAUDOUIN GERARD;HENRY EFREM PELISH;JOSHUA COURTNEY HORAN;KRISTIN LYNNE ANDREWS;MATTHEW D SHAIR;SCOT RICHARD MENTE;YUTING SUN~ 33:US ~31:63/174,177 ~32:13/04/2021;33:US ~31:63/239,089 ~32:31/08/2021;33:US ~31:63/242,837 ~32:10/09/2021;33:US ~31:63/292,605 ~32:22/12/2021

2023/09128 ~ Provisional ~54:GROUNDING DEVICE AND SEALING APPARATUS FOR A GROUNDING DEVICE ~71:TIMM, Troy Lance, 44 Goodman Street, Rynfield, South Africa ~72: TIMM, Troy Lance~

2023/09137 ~ Complete ~54:A MACHINE LEARNING MODEL FOR LITHOLOGY PREDICTION USING WELL LOGS AND DRILLING DATA ~71:CHAVAN, Hrishikesh, DEPARTMENT OF PETROLEUM ENGINEERING, DR. VISHWANATH MIT WORLD PEACE UNIVERSITY, PUNE, MAHARASHTRA, 411038, India;DR. VISHWANATH KARAD MIT WORLD PEACE UNIVERSITY, MIT WORLD PEACE UNIVERSITY S.NO.124, PAUD ROAD, KOTHRUD, PUNE, MAHARASHTRA, 411038, India;GUPTA, Pratush, DEPARTMENT OF PETROLEUM ENGINEERING, DR. VISHWANATH MIT WORLD PEACE UNIVERSITY, PUNE, MAHARASHTRA, 411038, India;LINGAM, Devashree, DEPARTMENT OF PETROLEUM ENGINEERING, DR. VISHWANATH MIT WORLD PEACE UNIVERSITY, PUNE, MAHARASHTRA, 411038, India;MANDYAL, Rashi, DEPARTMENT OF PETROLEUM ENGINEERING, DR. VISHWANATH MIT WORLD PEACE UNIVERSITY, PUNE, MAHARASHTRA, 411038, India;PATIL, Nishant, DEPARTMENT OF PETROLEUM ENGINEERING, DR. VISHWANATH MIT WORLD PEACE UNIVERSITY, PUNE, MAHARASHTRA, 411038, India;SINHARAY, Rajib K., DEPARTMENT OF PETROLEUM ENGINEERING, DR. VISHWANATH MIT WORLD PEACE UNIVERSITY, PUNE, MAHARASHTRA, 411038, India ~72: CHAVAN, Hrishikesh;GUPTA, Pratush;LINGAM, Devashree;MANDYAL, Rashi;PATIL, Nishant;SINHARAY, Rajib K.~

2023/09139 ~ Complete ~54:A SUSTAINED RELEASE GREEN SMART BIO FERTILIZER PELLET ~71:DR. VISHWANATH KARAD MIT WORLD PEACE UNIVERSITY, MIT WORLD PEACE UNIVERSITY S.NO.124,

PAUD ROAD, KOTHRUD, PUNE, MAHARASHTRA, 411038, India;JOSHI, Ratnadip R., SCHOOL OF CHEMICAL ENGINEERING, MIT WPU, PAUD ROAD, PUNE, MAHARASHTRA, 411038, India ~72: JOSHI, Ratnadip R.~

2023/09142 ~ Complete ~54:ANTI-CLEC12A ANTIBODIES AND USES THEREOF ~71:MILLENNIUM PHARMACEUTICALS, INC., 40 Landsdowne Street, United States of America ~72: YOSHIHARA, Tomoki~ 33:US ~31:63/179,755 ~32:26/04/2021

2023/09153 ~ Complete ~54:HETEROCYCLIC COMPOUNDS AND USES THEREOF ~71:KayoThera Inc., 2815 Eastlake Ave E., Suite 300, SEATTLE 98102 , WA, USA, United States of America;The Trustees of Princeton University, 619 Alexander Road, Suite 102, PRINCETON 08540, NJ, USA, United States of America ~72: ESPOSITO, Mark;KANG, Yibin;PIWINSKI, John;PROUDFOOT, John~ 33:US ~31:63/178,309 ~32:22/04/2021

2023/09130 ~ Complete ~54:HIGH-EFFICIENCY CATALYST FOR RESIDUAL OIL HYDROGENATION AND PREPARATION METHOD THEREFOR ~71:XINJIANG CAREER TECHNICAL COLLEGE, 62 Beijing West Road, Kuitun City, People's Republic of China ~72: JIA, Qi;LI, Guofeng;WANG, Mingquan;YANG, Weiqiang;YUN, Liang~ 33:CN ~31:2023104801262 ~32:28/04/2023

2023/09140 ~ Complete ~54:WATER HEATING DEVICE ~71:HOT NOZZLE (PTY) LTD., 87 Capricorn Drive, Capricorn Industrial Park, MUIZENBURG, Cape Town 7945, Western Cape, SOUTH AFRICA, South Africa ~72: HOZA, Thamsanqa Mongezi~ 33:ZA ~31:2022/09499 ~32:25/08/2022

2023/09136 ~ Complete ~54:A SYSTEM AND METHOD FOR MANAGING PROVISION OF GOODS AND SERVICES TO MEMBERS OF SAID SYSTEM ~71:MOSITO, Lehlohonolo Pius, 722 Leeuwkop Road, Sunninghill, South Africa ~72: MOSITO, Lehlohonolo Pius~ 33:ZA ~31:2022/07130 ~32:28/06/2022

2023/09138 ~ Complete ~54:A METAL ION ADSORBENT FOR COPER (II) REMOVAL FROM RED GRAM HUSK ~71:BHATKAR, Siraj, SCHOOL OF PETROLEUM ENGINEERING, MIT WORLD PEACE UNIVERSITY S.NO.124, PAUD ROAD, KOTHRUD, PUNE, MAHARASHTRA, 411038, India;DR. VISHWANATH KARAD MIT WORLD PEACE UNIVERSITY, MIT WORLD PEACE UNIVERSITY S.NO.124, PAUD ROAD, KOTHRUD, PUNE, MAHARASHTRA, 411038, India;KHURPADE, Pratiksha, SCHOOL OF PETROLEUM ENGINEERING, MIT WORLD PEACE UNIVERSITY S.NO.124, PAUD ROAD, KOTHRUD, PUNE, MAHARASHTRA, 411038, India;SHENOY, Vignesh, SCHOOL OF PETROLEUM ENGINEERING, MIT WORLD PEACE UNIVERSITY S.NO.124, PAUD ROAD, KOTHRUD, PUNE, MAHARASHTRA, 411038, India;TATPATE, Pallavi, SCHOOL OF PETROLEUM ENGINEERING, MIT WORLD PEACE UNIVERSITY S.NO.124, PAUD ROAD, KOTHRUD, PUNE, MAHARASHTRA, 411038, India;WADGAONKAR, Vinayak S., SCHOOL OF PETROLEUM ENGINEERING, MIT WORLD PEACE UNIVERSITY S.NO.124, PAUD ROAD, KOTHRUD, PUNE, MAHARASHTRA, 411038, India ~72: BHATKAR, Siraj;KHURPADE, Pratiksha;SHENOY, Vignesh;TATPATE, Pallavi;WADGAONKAR, Vinayak S.~

2023/09141 ~ Complete ~54:A GOLF CLUB HEAD CLEANER ~71:CONRADIE FAMILY TRUST, No. 11 Begerac Close, Bel Aire, South Africa ~72: CONRADIE, Jacobus Daniël;CONRADIE, Mila;CONRADIE, Philippus Möller;CONRADIE, Philippus Möller (Jnr);JOUBERT, Schalk Willem;VAN RENSSEN, Gerrit~

2023/09144 ~ Complete ~54:A PROTECTIVE MAT USED IN SPORTS TRAINING ~71:TaiShan University, No. 525, Dongyue Avenue, Daiyue District, Tai’an City, Shandong Province, 271000, People's Republic of China ~72: Hairong Zhang;Wei Zhao~

2023/09147 ~ Complete ~54:METHOD AND SYSTEM FOR STEAMCRACKING ~71:LINDE GMBH, Dr.-Carl-von-Linde-Strasse 6-14, Germany ~72: HÖRENZ, Michael;SCHMIDT, Gunther;STEGEMANN, Robert;ZELLHUBER, Mathieu~ 33:EP ~31:21161768.3 ~32:10/03/2021

2023/09149 ~ Complete ~54:ADAPTIVELY CODING MOTION INFORMATION FOR MULTIPLE HYPOTHESIS PREDICTION FOR VIDEO CODING ~71:QUALCOMM Incorporated, ATTN: International IP Administration, 5775 Morehouse Drive, SAN DIEGO 92121-1714, CA, USA, United States of America ~72: HUANG, Han;KARCZEWICZ, Marta;SEREGIN, Vadim~ 33:US ~31:63/167,480 ~32:29/03/2021;33:US ~31:17/655,919 ~32:22/03/2022

2023/09154 ~ Complete ~54:NITRITE REPLACEMENT (CURING AIDS) CONTAINING NATURAL INGREDIENTS ~71:Kemin Industries, Inc., 1900 Scott Avenue, DES MOINES 50317, IA, USA, United States of America ~72: COLLE, Ines;VERBIEST, Anja~ 33:US ~31:63/176,331 ~32:18/04/2021

2023/09157 ~ Complete ~54:SYSTEM AND METHODS FOR SIMULATION OF MEDICAL DEVICES ~71:REGENERON PHARMACEUTICALS, INC., 777 Old Saw Mill River Road, Tarrytown, New York, 10591, United States of America ~72: ROSS KENYON~ 33:US ~31:63/169,601 ~32:01/04/2021

2023/09160 ~ Complete ~54:METHODS AND SYSTEMS FOR STERILIZATION ~71:REGENERON PHARMACEUTICALS, INC., 777 Old Saw Mill River Road, Tarrytown, New York, 10591, United States of America ~72: DAKOTA BOLT;DUSTIN BLODGETT;PHILIP SHODDER~ 33:US ~31:63/172,457 ~32:08/04/2021

. - APPLIED ON 2023/09/29 -

2023/09165 ~ Complete ~54:PERCUSSIVE DRILL BIT ~71:BOART LONGYEAR COMPANY, 2455 South 3600 West, United States of America ~72: BILY, Mark;BRUBACHER, Adrian;LACHANCE, Anthony~ 33:US ~31:63/411,304 ~32:29/09/2022

2023/09167 ~ Complete ~54:JOINT REPLACEMENT ALIGNMENT GUIDES, SYSTEMS AND METHODS OF USE AND ASSEMBLY ~71:Paragon 28, Inc., 14445 Grasslands Drive, ENGLEWOOD 80112, CO, USA, United States of America ~72: LEE, Daniel J.~ 33:US ~31:62/779,436 ~32:13/12/2018;33:US ~31:62/899,655 ~32:12/09/2019;33:US ~31:62/899,703 ~32:12/09/2019;33:US ~31:62/899,740 ~32:12/09/2019

2023/09176 ~ Complete ~54:RELIABLE IDENTIFICATION OF REGIONS ('A-SITES') IN COMPLEX RNA MOLECULES THAT ARE ACCESSIBLE TO NUCLEIC ACIDS OR COMPLEXES OF NUCLEIC ACIDS WITH ENDONUCLEASES ~71:MARTIN-LUTHER-UNIVERSITÄT HALLE-WITTENBERG, Universitätsplatz 10, Germany ~72: BEHRENS, Sven-Erik;GAGO-ZACHERT, Selma;GHASEMZADEH, Ayson;GRUBER, Cornelia;GURSINSKY, Torsten;PANTALEO, Vitantonio~ 33:DE ~31:10 2021 107 508.4 ~32:25/03/2021

2023/09179 ~ Complete ~54:STACKED PANEL HEAT EXCHANGER FOR AIR COOLED INDUSTRIAL STEAM CONDENSER ~71:EVAPCO, INC., 5151 Allendale Lane, Taneytown, Maryland, 21787, United States of America ~72: HUBER, Mark;LIBERT, Jean-Pierre~ 33:US ~31:63/155,550 ~32:02/03/2021;33:US ~31:17/684,883 ~32:02/03/2022

2023/09180 ~ Complete ~54:METHOD AND DEVICE FOR CONTINUOUS MONITORING AND IMPROVED AUTOMATIC CONTROL OF TEMPERATURE, AND OF AERATION-OXYGENATION, OF THE PROCESS OF ALCOHOLIC FERMENTATION IN WINE BY MEANS OF ACOUSTIC EMISSION TECHNIQUES ~71:TALLERES RUIZ S.A., C/LA Nevera 3, P.I. LA Portalada II, 26006 Logroño, Spain ~72: ÁNGEL SÁNCHEZ ROCA;DANIEL NIÑO MARTÍN;EMILIO JIMÉNEZ MACÍAS;HAROLD CRESPO SARIOL;HIPÓLITO DOMINGO CARVAJAL FALS;JUAN CARLOS SÁENZ- DÍEZ MURO;JULIO BLANCO FERNÁNDEZ;Mª MERCEDES PÉREZ DE LA PARTE;ROBERTO RUIZ CABEZA;SERGIO MAMOLAR DOMENECH~

2023/09182 ~ Complete ~54:ROBOT ARM AND ARTICULATED ROBOT ARM ~71:HIBOT CORPORATION, 5-9-15 Kita Shinagawa Shinagawa-ku, Tokyo, 1400001, Japan ~72: HIROYA YAMADA~

2023/09187 ~ Complete ~54:INHIBITORS OF NLRP3 INFLAMMASOME ~71:BIOAGE LABS, INC., 1445A S 50th Street, United States of America;HITGEN, INC., Building 6, No. 8, Huigu 1st East Road, Tianfu International Bio-Town, People's Republic of China ~72: DU, Jia;HARTMAN, George;HE, Xu;HUMPHRIES, Paul;WILHELMSEN, Kevin Edward Leif;ZHANG, Lifang~ 33:US ~31:63/164,780 ~32:23/03/2021;33:US ~31:63/219,538 ~32:08/07/2021

2023/09172 ~ Complete ~54:THERAPEUTIC INHIBITORS OF GDF15 SIGNALLING ~71:CAMBRIDGE ENTERPRISE LIMITED, The Old Schools, Trinity Lane, United Kingdom;KYMAB LIMITED, The Bennet Building (B930), Babraham Research Campus, United Kingdom ~72: CARPENTER, Adam;CIMINO, Irene;COLL, Anthony Patrick;LEE, E-Chiang;LIU, Hui;O'RAHILLY, Stephen~ 33:GB ~31:2104556.2 ~32:31/03/2021;33:GB ~31:2107331.7 ~32:21/05/2021;33:GB ~31:2108170.8 ~32:08/06/2021

2023/09174 ~ Complete ~54:PROCESS FOR THE SIMULTANEOUS PROCESSING OF PLASTICS PYROLYSIS OILS AND OF A FEEDSTOCK ORIGINATING FROM RENEWABLE RESOURCES ~71:IFP ENERGIES NOUVELLES, 1 et 4 avenue de Bois-Préau, France ~72: BONNARDOT, Jérôme;DE SOUSA DUARTE, Marisa;DECOTTIGNIES, Dominique;SOUCHON, Vincent;WEISS, Wilfried~ 33:FR ~31:2104874 ~32:07/05/2021

2023/09169 ~ Complete ~54:DIAGNOSIS OF RESPIRATORY DISEASES BY CAPTURING AEROSOLIZED BIOMATERIAL PARTICLES USING PACKED BED SYSTEMS AND METHODS ~71:ZETEO TECH, INC., 6935 WARFIELD AVE., SYKESVILLE, MD 21784, USA, United States of America ~72: BRYDEN, Wayne, A;CHEN, Dapeng;MCLOUGHLIN, Michael~ 33:US ~31:63/169,130 ~32:31/03/2021;33:US ~31:63/249,357 ~32:28/09/2021;33:US ~31:63/325,435 ~32:30/03/2022

2023/09171 ~ Complete ~54:DIELECTRICALLY HEATED AEROSOL-GENERATING SYSTEM WITH OPTIMISED DIMENSIONS ~71:PHILIP MORRIS PRODUCTS S.A., Quai Jeanrenaud 3, Switzerland ~72: GONZALEZ FLOREZ, Ana Isabel;MANCINI, Roberto;TURRINI, Enrico~ 33:EP ~31:21160319.6 ~32:02/03/2021

2023/09173 ~ Complete ~54:INTEGRATED METHOD FOR PROCESSING PYROLYSIS OILS OF PLASTICS AND/OR SOLID RECOVERED FUELS LOADED WITH IMPURITIES ~71:IFP ENERGIES NOUVELLES, 1 et 4 avenue de Bois-Préau, France ~72: NGUYEN-HONG, Duc;QUIGNARD, Alain;WEISS, Wilfried~ 33:FR ~31:2104873 ~32:07/05/2021

2023/09175 ~ Complete ~54:NEW PHOSPHONATED NON-FLUORINATED AND PARTIALLY FLUORINATED ARYL POLYMERS FROM SULFONATED ARYL POLYMERS AND NEW POLYMERIC PERFLUOROPHOSPHONIC ACIDS FROM PERFLUOROSULFONIC ACIDS, THEIR PROCESS OF PREPARATION AND USE IN ELECTROMEMBRANE APPLICATIONS ~71:RIVA POWER SYSTEMS GMBH & CO. KG, Manfred-von-Ardenne-Allee 33, Germany ~72: Dr. Andreas CHROMIK~ 33:DE ~31:10 2021 003 228.4 ~32:23/06/2021

2023/09178 ~ Complete ~54:ELECTROCHEMICAL GAS SENSOR AND ELECTROLYTE FOR AN ELECTROCHEMICAL GAS SENSOR ~71:DRÄGER SAFETY AG & CO. KGAA, Revalstrasse 1, Germany ~72: Rolf ECKHARDT;Stephan HAUPT~ 33:EP ~31:21198500.7 ~32:23/09/2021

2023/09184 ~ Complete ~54:TARGETS OVEREXPRESSED ON THE SURFACE OF CANCER CELLS ~71:UNIVERSITY OF CAPE TOWN, Lovers Walk, Rondebosch, Cape Town, 7700, South Africa ~72: DARREN MARTIN;KRUPA NARAN;SINKALA MUSALULA;STEFAN BARTH~ 33:GB ~31:2104445.8 ~32:29/03/2021

2023/09185 ~ Complete ~54:APTAMERS FOR USE IN THE TREATMENT OF CORONAVIRIDAE INFECTIONS ~71:BERLIN CURES GMBH, Knesebeckstraße 59-61, 10719, Berlin, Germany ~72: ANNEKATHRIN

HABERLAND;GERD WALLUKAT;JOHANNES MÜLLER;PETER GÖTTEL~ 33:EP ~31:PCT/EP2021/059328 ~32:09/04/2021

2023/09177 ~ Complete ~54:DEEP CONVOLUTIONAL NEURAL NETWORKS TO PREDICT VARIANT PATHOGENICITY USING THREE-DIMENSIONAL (3D) PROTEIN STRUCTURES ~71:ILLUMINA CAMBRIDGE LIMITED, 19 Granta Park, Great Abington, United Kingdom;ILLUMINA, INC., 5200 Illumina Way, United States of America ~72: FARH, Kai-How;GAO, Hong;HAMP, Tobias~ 33:US ~31:17/232,056 ~32:15/04/2021;33:US ~31:63/175,495 ~32:15/04/2021;33:US ~31:63/175,767 ~32:16/04/2021;33:US ~31:17/468,411 ~32:07/09/2021;33:US ~31:17/703,935 ~32:24/03/2022;33:US ~31:17/703,958 ~32:24/03/2022

2023/09196 ~ Complete ~54:BISPECIFIC PD-1 AND TIGIT BINDING PROTEINS AND USES THEREOF ~71:MedImmune, LLC, One MedImmune Way, GAITHERSBURG 20878, MD, USA, United States of America ~72: CLANCY-THOMPSON, Eleanor;HAMMOND, Scott;LEE, Karin;MALHOTRA, Deepali;MAZOR, Yariv;MOODY, Gordon;OVERSTREET, Michael;PRYTS, Stacy;WANG, Yue~ 33:US ~31:63/182,156 ~32:30/04/2021

2023/09197 ~ Complete ~54:INCREASED TRANSFORMABILITY AND HAPLOID INDUCTION IN PLANTS ~71:Syngenta Crop Protection AG, Rosentalstrasse 67, BASEL 4058, SWITZERLAND, Switzerland ~72: DELZER, Brent;KELLIHER, Timothy Joseph;NICHOLS, Jason;SKIBBE, David Stewart~ 33:US ~31:63/169,316 ~32:01/04/2021

2023/09198 ~ Complete ~54:LIQUID HERBICIDAL COMPOSITIONS ~71:UPL Limited, UPL House, 610 B/2, Bandra Village, Off Western Express Highway, Bandra (East), MUMBAI 400051, MAHARASHTRA, INDIA, India ~72: BHOGE, Satish Ekanath;MONDAL, Achintya~ 33:IN ~31:202121009175 ~32:04/03/2021

2023/09200 ~ Complete ~54:PEPTIDE COMBINATION, CHIMERIC PEPTIDE, IMMUNOGENIC COMPOSITION, USE OF THE PEPTIDE COMBINATION, USE OF THE CHIMERIC PEPTIDE, USE OF A COMPOSITION, METHOD OF INDUCING IMMUNE RESPONSE AND KIT ~71:BIOTICK PESQUISA E DESENVOLVIMENTO TECNOLOGICO LTDA., Avenida Santo Amaro, 1047, Conj 1007, Brazil;EMPRESA BRASILEIRA DE PESQUISA AGROPECUARIA - EMBRAPA, Parque Estação Biológica - PqEB - S/N, Edifício Sede, Brazil ~72: ANDREOTTI E SILVA, Renato~ 33:BR ~31:10 2021 004904 9 ~32:16/03/2021

2023/09205 ~ Complete ~54:METHOD FOR TREATING HUMAN OR ANIMAL URINE BY BASIFIICATION AND USES OF THE URINE OBTAINED IN PARTICULAR AS FERTILISING SUBSTANCE ~71:TOOPI ORGANICS, 3 Lieu-Dit aux Halies ZA Ecopole 33190, France ~72: HUGUIER, Pierre;ROES, Michael~ 33:FR ~31:FR2102612 ~32:16/03/2021

2023/09186 ~ Complete ~54:NOVEL PHOSPHONATED FLUOROELASTOMERS (PFKMS), PHOSPHONATED PERFLUOROELASTOMERS (PFFKMS), THEIR PROCESS OF PREPARATION AND USE IN ELECTROMEMBRANE APPLICATIONS ~71:RIVA POWER SYSTEMS GMBH & CO. KG, Manfred-von-Ardenne-Allee 33, Germany ~72: Dr. Andreas CHROMIK~ 33:DE ~31:10 2021 003 229.2 ~32:23/06/2021

2023/09194 ~ Complete ~54:PRODUCTION OF E. COLI O18 BIOCONJUGATES ~71:Janssen Pharmaceuticals, Inc., 1125 Trenton-Harbourton Rd., TITUSVILLE 08560, NJ, USA, United States of America ~72: BURGHOUT, Pieter Jan;GEURTSEN, Jeroen;WEERDENBURG, Eveline Marleen~ 33:EP ~31:21166781.1 ~32:01/04/2021

2023/09199 ~ Complete ~54:METHODS AND COMPOSITIONS FOR HIGH-POTENCY POLYPEPTIDE-BASED PROTEIN INHIBITION ~71:Baylor College of Medicine, One Baylor Plaza, HOUSTON 77030, TX, USA, United States of America ~72: MA, Jianpeng;WANG, Qinghua~ 33:US ~31:63/168,107 ~32:30/03/2021

2023/09181 ~ Complete ~54:FLEXIBLE FERMENTATION PLATFORM FOR IMPROVED CONVERSION OF CARBON DIOXIDE INTO PRODUCTS ~71:LANZATECH, INC., 8045 Lamon Avenue, Suite 400, Skokie, Illinois, 60077, United States of America ~72: DARREN EARL YOUNGS;JASON CARL BROMLEY;MICHAEL EMERSON MARTIN;RICHARD RUSSELL ROSIN;ROBERT JOHN CONRADO;SEAN DENNIS SIMPSON~ 33:US ~31:63/173,243 ~32:09/04/2021;33:US ~31:63/173,247 ~32:09/04/2021;33:US ~31:63/173,255 ~32:09/04/2021;33:US ~31:63/173,262 ~32:09/04/2021;33:US ~31:63/282,546 ~32:23/11/2021

2023/09183 ~ Complete ~54:DEVICE FOR CONNECTING AN IMPLANTABLE HEART PROSTHESIS TO THE VASCULAR SYSTEM OF A PATIENT, AND HEART PROSTHESIS PROVIDED WITH SUCH A CONNECTING DEVICE ~71:CARMAT, Immeuble l'Etendard Energy III 36 Avenue de L'Europe 78140, Vélizy-Villacoublay, France ~72: FOULQUES PARRA D'ANDERT;MARC GRIMMÉ;PASCAL DUBUIS;PASCAL GOUMAULT~ 33:FR ~31:2103482 ~32:06/04/2021

2023/09188 ~ Complete ~54:INJECTION DEVICE WITH INJECTION COMPLETION INDICATOR ~71:Otsuka Pharmaceutical Co., Ltd., 2-9 Kanda Tsukasa-Machi, Chiyoda-ku, TOKYO 101-8535, JAPAN, Japan;Pulse Needlefree Systems, Inc., 8210 Marshall Drive, LENEXA 66214, KS, USA, United States of America ~72: ZOLOTUKHIN, Mikhail~ 33:US ~31:63/169,277 ~32:01/04/2021

2023/09168 ~ Complete ~54:ANTI-ADGRE2 ANTIBODIES AND USES THEREOF ~71:MILLENNIUM PHARMACEUTICALS, INC., 40 Landsdowne Street, United States of America ~72: BANERJEE, Antara;HE, Xingyue;JENNINGS, Shawn~ 33:US ~31:63/179,756 ~32:26/04/2021

2023/09189 ~ Complete ~54:A METHOD FOR NUMBERING, QR CODING AND/OR BARCODING OF BANKNOTES USING LASER WRITING ~71:Gleitsmann Security Inks GmbH, Ederstrasse 22, BERLIN 12059, GERMANY, Germany ~72: GUTMANN, Roland~ 33:EP ~31:21160065.5 ~32:01/03/2021

2023/09190 ~ Complete ~54:A COMPONENT FOR AN ARTICLE FOR USE IN AN AEROSOL PROVISION SYSTEM ~71:Nicoventures Trading Limited, Globe House, 1 Water Street, LONDON WC2R 3LA, UNITED KINGDOM, United Kingdom ~72: GRISHCHENKO, Andrei~ 33:GB ~31:2103576.1 ~32:15/03/2021

2023/09195 ~ Complete ~54:MICROBIOCIDAL QUINOLINE/QUINOXALINE BENZOTHIAZINE DERIVATIVES ~71:Syngenta Crop Protection AG, Rosentalstrasse 67, BASEL 4058, SWITZERLAND, Switzerland ~72: MAHAJAN, Atul;SEN, Indira;WEISS, Matthias;WILLIAMS, Simon~ 33:IN ~31:202111015219 ~32:31/03/2021;33:EP ~31:21181142.7 ~32:23/06/2021

2023/09191 ~ Complete ~54:AGRICULTURAL FORMULATIONS ~71:Stepan Company, 22 W. Frontage Road, NORTHFIELD 60093, IL, USA, United States of America ~72: FLINOIS, Christophe;MONTHEIL, Sandrine;SHAW, Elodie;STEINER, Rémi~ 33:US ~31:63/167,847 ~32:30/03/2021

2023/09193 ~ Complete ~54:PRECIPITATION OF METALS ~71:Pure Battery Technologies Pty Ltd, Level 32, 10 Eagle Street, BRISBANE 4000 , QUEENSLAND, AUSTRALIA, Australia ~72: FU, Weng;HAWKER, William;HODGE, Harrison Michael;MANN, David Andrew;VAUGHAN, James William~ 33:AU ~31:2021900570 ~32:02/03/2021;33:AU ~31:2021900571 ~32:02/03/2021

2023/09202 ~ Complete ~54:NOVEL MULTISPECIFIC ANTIBODIES ~71:MERUS N.V., Uppsalalaan 17, 3rd & 4th floor, Netherlands ~72: DE KRUIF, Cornelis Adriaan;PLYTE, Simon Edward~ 33:NL ~31:2027891 ~32:31/03/2021

2023/09203 ~ Complete ~54:RIFAMYCIN ANALOGS IN COMBINATION WITH VANCOMYCIN AND USES THEREOF ~71:REGENERON PHARMACEUTICALS, INC., 777 Old Saw Mill River Road, Tarrytown, United States of America ~72: NITTOLI, Thomas;ZUMSTEG, Anna~ 33:US ~31:63/166,597 ~32:26/03/2021

2023/09304 ~ Provisional ~54:SYSTEM AND METHOD FOR ESCORT (WALKER) FEATURE ~71:Bongani Mzobe, 653 Mangwele Street, Chiawelo Ext 3, Soweto, South Africa ~72: Bongani Mzobe~

2023/09163 ~ Complete ~54:A METHOD FOR IMPROVING THE SEEDLING RATE OF RHODODENDRON BY USING RHODODENDRON SPERMOSPHERE MICROORGANISMS ~71:GUIZHOU BOTANICAL GARDEN, No. 86 Luchongguan Road, Yunyan District, People's Republic of China ~72: LI, Jing;LI, Weijie;ZHOU, Yan~ 33:CN ~31:2023111598681 ~32:08/09/2023

2023/09164 ~ Complete ~54:ACID-ALPHA GLUCOSIDASE VARIANTS AND USES THEREOF ~71:GENETHON, 1 BIS, RUE DE L'INTERNATIONALE, 91000 EVRY, FRANCE, France;INSERM (INSTITUT NATIONAL DE LA SANTÉ ET DE LA RECHERCHE MÉDICALE), 101 RUE DE TOLBIAC, 75013 PARIS, FRANCE, France;UNIVERSITE D'EVRY VAL D'ESSONNE, 47 BOULEVARD FRANÇOIS MITTERRAND, 91000 EVRY, FRANCE, France ~72: MINGOZZI, Federico;RONZITTI, Giuseppe~ 33:EP ~31:16306150.0 ~32:12/09/2016;33:EP ~31:16306187.2 ~32:16/09/2016

2023/09166 ~ Complete ~54:DEVICE AND METHOD FOR DETECTING AN ELECTRONIC DEVICE LOCATION ~71:Comviva Technologies Limited, 5th, 7th & 8th floor, Capital Cyberscape, Village Ullahwas, Sector 59, Golf Course Extension Road, GURUGRAM 122102, HARYANA, INDIA, India ~72: GOYAL, Gaurav;JAIN, Manish~ 33:IN ~31:202211056280 ~32:30/09/2022

2023/09192 ~ Complete ~54:PROCESS FOR AMMONIA SYNTHESIS USING GREEN HYDROGEN ~71:Casale SA, Via Pocobelli, 6, LUGANO 6900, SWITZERLAND, Switzerland ~72: PANZA, Sergio~ 33:EP ~31:21166083.2 ~32:30/03/2021

2023/09204 ~ Complete ~54:LACTIVICIN COMPOUNDS, THEIR PREPARATION AND USE AS ANTIBACTERIAL AGENTS ~71:FEDORA PHARMACEUTICALS INC., 11629 105 Avenue NW, Canada ~72: JANKOWSKA, Renata;MAITI, Samarendra N.;SALAMA, Sameeh M.~ 33:US ~31:63/168,406 ~32:31/03/2021

2023/09170 ~ Complete ~54:DIELECTRICALLY HEATED AEROSOL-GENERATING SYSTEM WITH SEGMENTED HEATER ~71:PHILIP MORRIS PRODUCTS S.A., Quai Jeanrenaud 3, Switzerland ~72: GONZALEZ FLOREZ, Ana Isabel;MANCINI, Roberto;TURRINI, Enrico~ 33:EP ~31:21160318.8 ~32:02/03/2021

2023/09201 ~ Complete ~54:ORTHOPEDIC SHOE SOLE OR INSOLE AND SHOE FOR PEOPLE WITH HALLUX VALGUS ~71:GORDIEIEV, Viktor, Via Frazione Girola 8, Italy;KIRPICHNIKOV, Alexey, Friedrichstrasse 7, Germany;SEREGIN, Yury, Bertha-Sander-Strasse 53, Germany ~72: KIRPICHNIKOV, Alexey;SEREGIN, Yury~ 33:IT ~31:102021000015188 ~32:10/06/2021

. - APPLIED ON 2023/10/02 -

2023/09208 ~ Provisional ~54:CYLINDRICALSOLARTOWERS ~71:Stapleton Bosealetse, 5 Botes street, Clayville West, South Africa;Stapleton Bosealetse, 5 Botes street, Clayville West, South Africa ~72: Stapleton Bosealetse~

2023/09213 ~ Complete ~54:ADIABATIC PRE-COOLING REDISTRIBUTION SYSTEM ~71:EVAPCO, INC., Allendale Lane, Taneytown, Maryland, 21787, United States of America ~72: JOHNSON, Patrick Stephen;WRIGHT, Kenneth Calvin~ 33:US ~31:63/169,420 ~32:01/04/2021;33:US ~31:17/711,504 ~32:01/04/2022

2023/09221 ~ Complete ~54:METHOD AND APPARATUS FOR MULTI-DESELECTION IN WASTEWATER TREATMENT ~71:BERNHARD WETT, CiUnterbergerstr. 1, 6020, Innsbruck, Austria;D.C. WATER AND SEWER AUTHORITY, 5000 Overlook Avenue, SW, Washington, District of Columbia, 20032, United States of

America;HAMPTON ROADS SANITATION DISTRICT, 1434 Air Rail Avenue, P.O. Box 5911, Virginia Beach, Virginia, 23471-0911, United States of America;MAUREEN O'SHAUGHNESSY, 12602 Denmark Drive, Herndon, Virginia, 20171, United States of America;SUDHIR MURTHY, 12602 Denmark Drive Herndon, Virginia, 20171, United States of America ~72: BERNHARD WETT;CHARLES BOTT;CHRISTINE DEBARBADILLO;HAYDEE DE CLIPPELEIR;MAUREEN O'SHAUGHNESSY;SUDHIR MURTHY~ 33:US ~31:63/160,497 ~32:12/03/2021

2023/09216 ~ Complete ~54:TRIAZOLYL-METHYL SUBSTITUTED ALPHA-D-GALACTOPYRANOSIDE DERIVATIVES ~71:Idorsia Pharmaceuticals Ltd, Hegenheimermattweg 91, ALLSCHWIL 4123, SWITZERLAND, Switzerland ~72: BOLLI, Martin;GATFIELD, John;GRISOSTOMI, Corinna;REMEN, Lubos;SAGER, Christoph;ZUMBRUNN, Cornelia~ 33:IB ~31:2021/055348 ~32:03/03/2021

2023/09219 ~ Complete ~54:APPARATUS AND METHOD FOR CHECKING VALUE DOCUMENTS AND SYSTEM FOR PROCESSING VALUE DOCUMENTS ~71:Giesecke+Devrient Currency Technology GmbH, Prinzregentenstr. 161, MÜNCHEN 81677, GERMANY, Germany ~72: GEBHARDT, Manfred;HOLL, Norbert;SHALA, Shkelqim;STEIN, Dieter~ 33:DE ~31:10 2021 001 963.6 ~32:14/04/2021

2023/09206 ~ Provisional ~54:A SMART TOILET SYSTEM WITH SEPTIC TANK SYSTEM ~71:Gae Mahlakung (Pty) Ltd, STAND NO 10081, South Africa ~72: BOPAPE MATOME ZACHARIA~

2023/09210 ~ Complete ~54:SPILL-PREVENTABLE CONTAINER WITH FASTENING MEANS ~71:ELSE HOLDINGS (PTY) LTD, 319 FLORA ROAD, South Africa ~72: ELSE, JOHN MARTIN~

2023/09212 ~ Complete ~54:FURNACE WITH STRAY-ARC PROTECTION SYSTEM AND METHOD ~71:GREYLING, Frederik Petrus, 13A Dolerite Crescent, Middelburg, South Africa;GREYLING, Ruan, 13A Dolerite Crescent, Middelburg, South Africa ~72: GREYLING, Frederik Petrus;GREYLING, Ruan~ 33:NL ~31:2033395 ~32:25/10/2022

2023/09217 ~ Complete ~54:BIPOLAR PLATE FOR A FUEL CELL STACK OR AN ELECTROLYZER STACK ~71:L'Air Liquide, Societe Anonyme pour l'Etude et l'Exploitation des Procedes Georges Claude, 75 Quai d'Orsay, PARIS 75007, FRANCE, France ~72: ANDRE, Johan;SIRAC, Denis~ 33:FR ~31:2103579 ~32:08/04/2021

2023/09222 ~ Complete ~54:MONITORING DEVICE FOR TRACKING A WEAR ELEMENT; SYSTEM AND METHODS ~71:UNIVERSIDAD DE SANTIAGO DE CHILE, Av. Libertador Bernardo O`Higgins 3363, Estación Central, Santiago, Chile ~72: ALVARO PATRICIO ESPEJO PIÑA;CARLOS JAVIER EUGENIO HERRERA;DORA ROSA ALTBIR DRULLINSKY;GABRIEL ESTEBAN FUENTES AMPUERO;MATÍAS BERNARDO TARGARONA HERRERA;OMAR ANDRÉS DAUD ALBASINI;SEBASTIÁN ANDRÉS SEPÚLVEDA VÁSQUEZ~ 33:CL ~31:688-2021 ~32:19/03/2021

2023/09223 ~ Complete ~54:ANTI-C-MET ANTIBODIES AND ANTIBODY-DRUG CONJUGATES ~71:BYONDIS B.V., Microweg 22, 6545 CM, Nijmegen, Netherlands ~72: MARION BLOMENRÖHR;MIRANDA MARIA CORNELIA VAN DER LEE;PATRICK GERHARD GROOTHUIS~ 33:EP ~31:21167423.9 ~32:08/04/2021

2023/09225 ~ Complete ~54:IMMUNOGENIC FUSION PROTEIN ~71:MINERVAX APS, Ole Maaløes Vej 3, 2200, KØBENHAVN N, Denmark ~72: PER BO PEDERSEN FISCHER~ 33:EP ~31:21165674.9 ~32:29/03/2021

2023/09207 ~ Provisional ~54:CLADDING AND A METHOD OF APPLYING CLADDING TO A HOUSING ~71:STEVEN PETER SHORT, 752 26TH AVENUE, United Kingdom ~72: Steven Peter Short~

2023/09209 ~ Provisional ~54:FUSEHEAD AND DETONATOR CONNECTION ~71:PLICHTA, Martin, George, NO 9 MONT PELLIER, NETTLETON ROAD, BEDFORDVIEW, South Africa ~72: DAVIS, Mark, Rodney;PLICHTA, Martin, George~

2023/09215 ~ Complete ~54:LIQUID DISTRIBUTION SYSTEMS FOR CROP SPRAYERS, AND RELATED METHODS ~71:AGCO CORPORATION, 4205 River Green Parkway, Duluth, United States of America;PRECISION PLANTING LLC, 23207 Townline Road, Tremont, United States of America ~72: ANDERSON, Joseph Paul;MCMENAMY, Justin;SLAWSON, James McGrath;SNYDER, Todd Brandon~ 33:US ~31:63/191,131 ~32:20/05/2021

2023/09220 ~ Complete ~54:THYROID HORMONE RECEPTOR BETA AGONIST COMPOUNDS ~71:TERNS PHARMACEUTICALS, INC., 1065 E. Hillsdale Blvd., Suite 100, Foster City, California 94404, United States of America ~72: COREY REEVES;F. ANTHONY ROMERO;KEVIN KLUCHER;MARTIJN FENAUX;RANDALL HALCOMB;THORSTEN A KIRSCHBERG;YINGZI XU~ 33:US ~31:63/156,227 ~32:03/03/2021

2023/09224 ~ Complete ~54:RESERVOIR-REGULATING DIGITAL LOAD CONTROL ~71:LONE GULL HOLDINGS, LTD., 5331 SW Macadam Avenue, Ste 258-332, Portland, Oregon, 97239, United States of America ~72: BRIAN LEE MOFFAT;DANIEL WILLIAM PLACE;GARTH ALEXANDER SHELDON-COULSON;IVAR LEE THORSON~ 33:US ~31:63/171,589 ~32:07/04/2021

2023/09226 ~ Complete ~54:AIR CONDITIONING DEVICE WITH INDIRECT COOLING BY EVAPORATION ~71:CAELI ENERGIE, Tarmac, 29 Chemin Du Vieux Chêne, 38240 Meylan, France ~72: STÉPHANE LIPS~ 33:FR ~31:FR2102107 ~32:04/03/2021

2023/09211 ~ Complete ~54:MAN HOLE COVER ~71:INTERLOCK SYSTEMS (PTY) LTD, N055 Olienhout Rylaan, South Africa ~72: NEIL VAN RENSBURG~

2023/09214 ~ Complete ~54:AEROSOL GENERATING DEVICE WITH PUFF DETECTION ~71:PHILIP MORRIS PRODUCTS S.A., Quai Jeanrenaud 3, Switzerland ~72: BESSANT, Michel;HOW, Jun Jie;STEFFEN, Fabrice;YIM, Jun, Wei~ 33:EP ~31:21160540.7 ~32:03/03/2021

2023/09227 ~ Complete ~54:HB-EGF GENE THERAPY FOR DIABETES ~71:KAGOSHIMA UNIVERSITY, 21-24, Korimoto 1-chome Kagoshima-shi, Kagoshima, 8908580, Japan ~72: ERIKO MATSUDA;KEN-ICHIRO KOSAI~ 33:JP ~31:2021-033714 ~32:03/03/2021;33:JP ~31:2021-145796 ~32:07/09/2021

2023/09218 ~ Complete ~54:ANTI-CD20 ANTIBODIES AND CAR-T STRUCTURES ~71:TeneoBio, Inc., One Amgen Center Drive, THOUSAND OAKS 91320-1799 , CA, USA, United States of America ~72: ALLEN, Nicole;AVANZINO, Brian;CHANG, Karen;HARRIS, Katherine;TRINKLEIN, Nathan~ 33:US ~31:63/176,161 ~32:16/04/2021

. - APPLIED ON 2023/10/03 -

2023/09247 ~ Complete ~54:METHOD FOR DEPOSITION OF DENSE CHROMIUM ON A SUBSTRATE ~71:HYDROMECANIQUE ET FROTTEMENT, 69 Avenue Benoît Fourneyron, France ~72: HEAU, Christophe;VILLARD, Maxime~ 33:FR ~31:2105207 ~32:19/05/2021

2023/09250 ~ Complete ~54:SUBSTITUTED 1-ARYL-1'-HETEROARYL COMPOUNDS, SUBSTITUTED 1,1'-BIHETEROARYL COMPOUNDS, AND METHODS USING SAME ~71:ARBUTUS BIOPHARMA CORPORATION, 25th Floor, 700 West Georgia Street, Vancouver, British Columbia, V7Y 1B3, Canada ~72: ANDREW G COLE;BRUCE D DORSEY;DUYAN NGUYEN;GAVIN D HEFFERNAN;JORGE QUINTERO;MICHAEL J

SOFIA;RAMESH KAKARLA;SEYMA OZTURK;STEVEN G KULTGEN;VIJAY AHUJA;YI FAN~ 33:US ~31:63/167,440 ~32:29/03/2021;33:US ~31:63/291,666 ~32:20/12/2021

2023/09237 ~ Complete ~54:A WATER CLEANING BOAT ~71:DR. VISHWANATH KARAD MIT WORLD PEACE UNIVERSITY, MIT WORLD PEACE UNIVERSITY S.NO.124, PAUD ROAD, KOTHRUD, PUNE, MAHARASHTRA, 411038, India;HAVALDAR, Sanjay Narayan, DR VISHWANATH KARAD MIT WORLD PEACE UNIVERSITY S.NO.124, PAUD ROAD, KOTHRUD, PUNE, MAHARASHTRA, 411038, India;KULKARNI, Kaustubh Ganesh, DR VISHWANATH KARAD MIT WORLD PEACE UNIVERSITY S.NO.124, PAUD ROAD, KOTHRUD, PUNE, MAHARASHTRA, 411038, India;PATEL, Hitik, DR VISHWANATH KARAD MIT WORLD PEACE UNIVERSITY S.NO.124, PAUD ROAD, KOTHRUD, PUNE, MAHARASHTRA, 411038, India;TAMHANKAR, Neel, DR VISHWANATH KARAD MIT WORLD PEACE UNIVERSITY S.NO.124, PAUD ROAD, KOTHRUD, PUNE, MAHARASHTRA, 411038, India ~72: HAVALDAR, Sanjay Narayan;KULKARNI, Kaustubh Ganesh;PATEL, Hitik;TAMHANKAR, Neel~

2023/09254 ~ Complete ~54:HARD COATING COMPOSITION, HARD COATING FILM OBTAINED THEREFROM, LAMINATE INCLUDING HARD COATING FILM, METHOD OF FORMING HARD COATING FILM, AND ARTICLE INCLUDING HARD COATING FILM ~71:Samsung Electronics Co., Ltd., 129, Samsung-ro, Yeongtong-gu, SUWON-SI 16677, GYEONGGI-DO, REPUBLIC OF KOREA, Republic of Korea ~72: CHANG, Wonsuk;HWANG, Seungsik;KIM, Ginam;KIM, Inki;KIM, Yongkwon;SHIN, Hyunsuk~ 33:KR ~31:10-2021-0034868 ~32:17/03/2021

2023/09251 ~ Complete ~54:METHOD FOR PRODUCING ALDEHYDE AND METHOD FOR PRODUCING CATALYST ~71:MITSUBISHI CHEMICAL CORPORATION, 1-1, Marunouchi 1-chome, Chiyoda-ku, Tokyo, 1008251, Japan ~72: ATUSHI KOJYOU;TAKASHI SATO~ 33:JP ~31:2021-056855 ~32:30/03/2021;33:JP ~31:2021-192233 ~32:26/11/2021

2023/09257 ~ Complete ~54:LILRB1 AND LILRB2-BINDING MOLECULES AND USES THEREFOR ~71:University Health Network, 190 Elizabeth Street, R. Fraser Elliott Building - Room 1S-417, TORONTO M5G 2C4, ONTARIO, CANADA, Canada ~72: BRAY, Mark Robert;BROKX, Richard;DUNCAN, Gordon S.;MASON, Jacqueline M.~ 33:US ~31:63/159,613 ~32:11/03/2021

2023/09264 ~ Complete ~54:METHOD AND APPARATUS FOR PRODUCT INVENTORY CONTROL AND PERFORMANCE OPTIMIZATION ~71:BUCKMAN LABORATORIES INTERNATIONAL, INC., 1256 North McLean Boulevard, United States of America ~72: VON DRASEK, William~ 33:US ~31:63/171,678 ~32:07/04/2021;33:US ~31:63/278,809 ~32:12/11/2021

2023/09265 ~ Provisional ~54:AN ENERGY STORAGE DEVICE ~71:Le Roux Abraham VAN WYK, 409 Central Park Road, Lynnwood, South Africa ~72: VAN WYK, Le Roux Abraham~

2023/09252 ~ Complete ~54:2-AMINO-4-CARBOXAMIDE-BENZAZEPINE IMMUNOCONJUGATES, AND USES THEREOF ~71:BOLT BIOTHERAPEUTICS, INC., 900 Chesapeake Drive, Redwood City, California, 94063, United States of America ~72: BRIAN SAFINA;GARY BRANDT;ROMAS KUDIRKA~ 33:US ~31:63/166,716 ~32:26/03/2021

2023/09234 ~ Complete ~54:UNDERGROUND AIRFLOW CONTROL SYSTEM AND METHOD ~71:GLAESER, Frank George, Setlaars 21, BEN FLEUR, Witbank 1035, Mpumalanga Province, SOUTH AFRICA, South Africa ~72: GLAESER, Frank George~

2023/09236 ~ Complete ~54:A SOFT UNDERWATER MULTIARMED ROBOTIC GRIPPER ~71:DR. VISHWANATH KARAD MIT WORLD PEACE UNIVERSITY, MIT WORLD PEACE UNIVERSITY S.NO.124, PAUD ROAD, KOTHRUD, PUNE, MAHARASHTRA, 411038, India;THOTE, Abhishek M., SCHOOL OF

MECHANICAL ENGINEERING, DR. VISHWANATH KARAD MIT- WORLD PEACE UNIVERSITY, SURVEY NO, 124, PAUD RD, KOTHRUD, PUNE, MAHARASHTRA, 411038, India;WAGHMARE, Pratap, SCHOOL OF MECHANICAL ENGINEERING, DR. VISHWANATH KARAD MIT- WORLD PEACE UNIVERSITY, SURVEY NO, 124, PAUD RD, KOTHRUD, PUNE, MAHARASHTRA, 411038, India ~72: THOTE, Abhishek M.;WAGHMARE, Pratap~

2023/09241 ~ Complete ~54:WOUND TREATMENTS AND METHODS OF STABILIZING, PROTECTING, AND TREATING A WOUND ~71:KERECIS HF, Eyrargata 2, Iceland ~72: SIGURJONSSON, Gudmundur Fertram~ 33:US ~31:63/166,005 ~32:25/03/2021;33:US ~31:63/166,064 ~32:25/03/2021

2023/09263 ~ Complete ~54:VACCINES FOR THE TREATMENT AND PREVENTION OF ZOONOTIC INFECTIONS ~71:LONGHORN VACCINES AND DIAGNOSTICS, LLC, 7272 Wisconsin Ave, 9th Floor, United States of America ~72: DAUM, Luke T.;FISCHER, Gerald W.~ 33:US ~31:63/156,645 ~32:04/03/2021;33:US ~31:63/246,580 ~32:21/09/2021

2023/09233 ~ Provisional ~54:MOBILE BUFFING APPLICATION ~71:Thuso Kgwathe, 2360 Falcon Street, South Africa ~72: Thuso Kgwathe~

2023/09238 ~ Complete ~54:A DEVICE FOR PRODUCING YTTRIUM ZIRCONATE (Y2ZR2O7:GD3+) DOPED PHOSPHOR ~71:Jagjeet K Saluja, Govt. V.V.T. PG Autonomous College, Durg, Chhattisgarh, 491001, India;Ramadhin, Govt. V.V.T. PG Autonomous College, Durg, Chhattisgarh, 491001, India;Ravi Shrivastava, Shri Shankaracharya Technical University, Junwani, Bhilai, 490020, India;Vikas Dubey, Department of Physics.North Eastern Hill University(NEHU) Shilong. Meghalaya, 793001, India ~72: Jagjeet K Saluja;Ramadhin;Ravi Shrivastava;Vikas Dubey~

2023/09253 ~ Complete ~54:ANTIBACTERIAL MONOMER, ANTIBACTERIAL POLYMER COMPOSITION INCLUDING THE ANTIBACTERIAL MONOMER, ANTIBACTERIAL FILM OBTAINED FROM THE ANTIBACTERIAL POLYMER COMPOSITION, AND ARTICLE INCLUDING THE ANTIBACTERIAL FILM ~71:Samsung Electronics Co., Ltd., 129, Samsung-ro, Yeongtong-gu, SUWON-SI 16677, GYEONGGI-DO, REPUBLIC OF KOREA, Republic of Korea ~72: CHANG, Wonsuk;KIM, Ginam;KIM, Inki~ 33:KR ~31:10-2021-0039997 ~32:26/03/2021

2023/09248 ~ Complete ~54:SYSTEM HAVING A DEVICE FOR PRODUCING A PIPELINE UNIT AND METHOD FOR PRODUCING A PIPELINE UNIT ~71:GLATT GESELLSCHAFT MIT BESCHRÄNKTER HAFTUNG, Werner-Glatt-Straße 1, 79589, Binzen, Germany ~72: MIRKO NOWAK;REINHARD NOWAK~ 33:DE ~31:10 2021 202 883.7 ~32:24/03/2021

2023/09256 ~ Complete ~54:A DRILL HEAD INJECTION SYSTEM FOR A SELF-DRILLING ROCK BOLT ASSEMBLY ~71:OKA Rock Bolt Technologies Pty Limited, 3rd Floor, 169 King Street, NEWCASTLE 2300, NEW SOUTH WALES, AUSTRALIA, Australia ~72: LEVEY, Mark Anthony~ 33:AU ~31:2021901240 ~32:27/04/2021;33:AU ~31:2021901394 ~32:11/05/2021;33:AU ~31:2021901470 ~32:17/05/2021

2023/09261 ~ Complete ~54:NOVEL ERGOLINES AND METHODS OF TREATING MOOD DISORDERS ~71:GILGAMESH PHARMACEUTICALS, INC., 113 University Place, Suite 1019, United States of America ~72: KRUEGEL, Andrew Carry~ 33:US ~31:63/179,053 ~32:23/04/2021;33:US ~31:63/308,376 ~32:09/02/2022

2023/09262 ~ Complete ~54:CABLE GLAND ~71:HELLERMANNTYTON (PTY) LTD, 34 Milkyway Avenue, Linbro Business Park, South Africa ~72: PHILLIPS, Peter Don;SWANEPOEL, Barend Hercules Philippus~ 33:ZA ~31:2021/02125 ~32:30/03/2021

2023/09243 ~ Complete ~54:HYBRID GRID AND RENEWABLE BASED ENERGY SYSTEM ~71:CONDUCTIFY LIMITED, Suite 225, High Street, Maidenhead, United Kingdom ~72: TENNANT, ROBERT~ 33:GB ~31:2002293.5 ~32:19/02/2020;33:GB ~31:2102250.4 ~32:17/02/2021

2023/09259 ~ Complete ~54:SYSTEM FOR ELECTRICALLY FEEDING ELECTRICALLY POWERED VEHICLES ~71:Bluvein Innovation Pty. Ltd., 248 Earnshaw Rd., NORTHGATE 4014 , QLD, AUSTRALIA, Australia ~72: ASPLUND, Gunnar;OLIVER, James;SPRAGUE, Anthony~

2023/09255 ~ Complete ~54:AROMA-INFUSED COFFEE BEANS ~71:Société des Produits Nestlé S.A., Av. Nestlé 55, VEVEY 1800, SWITZERLAND, Switzerland ~72: DAVIDEK, Tomas;MORA, Federico;POLSTER, Johannes~ 33:US ~31:63/158,972 ~32:10/03/2021;33:EP ~31:21163616.2 ~32:19/03/2021

2023/09228 ~ Provisional ~54:MEDICAL DEVICE WITH PLASTER-HOLDERS AND METHOD FOR AUTOMATIC IV-CATHETER INSERTION ~71:SA-AYDIEN ALLY, 162 FIFTH AVENUE, DISCOVERY EXT 9, South Africa ~72: SA-AYDIEN ALLY ~

2023/09230 ~ Provisional ~54:SURGICAL DEVICE ~71:STEYN, Braden, 60 Wavell Avenue, Margate, Durban, SOUTH AFRICA, South Africa ~72: STEYN, Braden~

2023/09232 ~ Provisional ~54:EASYFIND ~71:Abdul Azeez Sultan, 106 Road 721, South Africa ~72: Abdul Azeez Sultan~

2023/09235 ~ Complete ~54:A SYSTEM FOR EVALUATING AND RANKING CANDIDATE RESUMES ~71:CHAUDHARI, Keyur Sunit, DR VISHWANATH KARAD MIT WORLD PEACE UNIVERSITY S.NO.124, PAUD ROAD, KOTHRUD, PUNE, MAHARASHTRA, 411038, India;DESHPANDE, Kalyani Prashant, DR VISHWANATH KARAD MIT WORLD PEACE UNIVERSITY S.NO.124, PAUD ROAD, KOTHRUD, PUNE, MAHARASHTRA, 411038, India;DR. VISHWANATH KARAD MIT WORLD PEACE UNIVERSITY, MIT WORLD PEACE UNIVERSITY S.NO.124, PAUD ROAD, KOTHRUD, PUNE, MAHARASHTRA, 411038, India;RANE, Rashmi Ashwinikumar, DR VISHWANATH KARAD MIT WORLD PEACE UNIVERSITY S.NO.124, PAUD ROAD, KOTHRUD, PUNE, MAHARASHTRA, 411038, India;SABU, Nidhi, DR VISHWANATH KARAD MIT WORLD PEACE UNIVERSITY S.NO.124, PAUD ROAD, KOTHRUD, PUNE, MAHARASHTRA, 411038, India;SHIRBHATE, Venkatesh Dilip, DR VISHWANATH KARAD MIT WORLD PEACE UNIVERSITY S.NO.124, PAUD ROAD, KOTHRUD, PUNE, MAHARASHTRA, 411038, India;UTTAM, Sanket, DR VISHWANATH KARAD MIT WORLD PEACE UNIVERSITY S.NO.124, PAUD ROAD, KOTHRUD, PUNE, MAHARASHTRA, 411038, India ~72: CHAUDHARI, Keyur Sunit;DESHPANDE, Kalyani Prashant;RANE, Rashmi Ashwinikumar;SABU, Nidhi;SHIRBHATE, Venkatesh Dilip;UTTAM, Sanket~

2023/09239 ~ Complete ~54:A COLORED BIOLOGIC WOUND TREATMENT PROVIDING HEALING PROGRESS MONITORING ~71:KERECIS HF, Eyrargata 2, Iceland ~72: JOHANNSSON, Gunnar;SIGURJONSSON, Gudmundur Fertram~ 33:US ~31:63/165,630 ~32:24/03/2021

2023/09242 ~ Complete ~54:HYBRID GRID AND RENEWABLE BASED ENERGY SYSTEM ~71:CONDUCTIFY LIMITED, Suite 225, High Street, Maidenhead, United Kingdom ~72: TENNANT, ROBERT~ 33:GB ~31:2002293.5 ~32:19/02/2020;33:GB ~31:2102250.4 ~32:17/02/2021

2023/09246 ~ Complete ~54:METHOD FOR MONITORING THE QUALITY CHARACTERISTICS OF A PULP BALE IN A BALING LINE ~71:ANDRITZ AG, Stattegger Strasse 18, Austria ~72: Armin KONJEVOD, DI FH;Dr. Michael BERGMANN;Ing. Gernot GRATZER~ 33:AT ~31:A50347/2021 ~32:06/05/2021

2023/09269 ~ Complete ~54:NEW (HOMO)PIPERIDINYL HETEROCYCLES AS SIGMA LIGANDS ~71:ACONDICIONAMIENTO TARRASENSE, C/ DE LA INNOVACIÓ, 2 08225 TERRASSA, Spain ~72: ALMANSA-ROSALES, Carmen;CHRISTMANN, Ute;DÍAZ-FERNÁNDEZ, José Luis~ 33:EP ~31:21382291.9 ~32:07/04/2021

2023/09244 ~ Complete ~54:INTRA-ROW WEEDING METHOD FOR AGRICULTURAL CROPS IN THE IMMEDIATE VICINITY OF THE ROOTS THEREOF ~71:ULLMANNA S.R.O., Olomoucka 201/11 74601, Czech Republic ~72: CMELIK, Jan;PLHAL, Jan;SPACEK, Jan;ULLMANN, Jindrich;ULLMANN, Martin~ 33:CZ ~31:PV 2021-198 ~32:20/04/2021

2023/09260 ~ Complete ~54:2-((4-((S)-2-(4-CHLORO-2-FLUOROPHENYL)-2-METHYLBENZO[D][1,3]DIOXOL-4-YL)PIPERIDIN-1-YL)METHYL)-1-(((S)-OXETAN-2-YL)METHYL)-1H-IMIDAZOLE DERIVATIVES AS ACTIVATORS OF THE GLP1 RECEPTOR FOR THE TREATMENT OF OBESITY ~71:NOVARTIS AG, Lichtstrasse 35, Switzerland ~72: ALLAN, Martin;CARSON, Matthew;CAYA, Thomas;CZABANIUK, Lara;QIAN, Ming;SMITH, Daniel;SMITH, Troy;SU, Liansheng;WU, Chung-Yeh;YANG, Lihua;ZHANG, Chun;ZHANG, Ping;ZHOU, Xilin~ 33:US ~31:63/173,592 ~32:12/04/2021;33:US ~31:63/308,843 ~32:10/02/2022;33:US ~31:63/323,401 ~32:24/03/2022

2023/09249 ~ Complete ~54:USE OF A RED ALGA EXTRACT AS NEMATOSTATIC AND/OR NEMATICIDAL AGENT ~71:AGRO INNOVATION INTERNATIONAL, 18 Avenue, Franklin Roosevelt, 35400, Saint-Malo, France ~72: EMMANUEL ERIC NGUEMA-ONA~ 33:FR ~31:FR2102737 ~32:18/03/2021

2023/09229 ~ Provisional ~54:VERSATILE ROOF ANCHOR ~71:Johannes Jacobus Naude, 12 Arend avenue, South Africa ~72: Johannes Jacobus Naude~

2023/09231 ~ Provisional ~54:NANOCOMPOSITES OF BRITTLE POLYMERIC MATERIALS ~71:Tshwane University of Technology, Staatsartellerie Road, Pretoria West, PRETORIA 0183, Gauteng, SOUTH AFRICA, South Africa;UNIVERSITY OF JOHANNESBURG, Cnr Kingsway Avenue and University Road, Auckland Park, JOHANNESBURG 2006, SOUTH AFRICA, South Africa ~72: OBOIRIEN, Bilainu;OKPUWHARA, Rita Onohaigho;SADIKU, Emmanuel Rotimi~

2023/09240 ~ Complete ~54:DIVIDING HOPPER AND TRANSPORTABLE SCREENING APPARATUS ~71:METSO FINLAND OY, Rauhalanpuisto 9, Finland ~72: SHARMA, Jasvinder~ 33:IN ~31:202111019069 ~32:26/04/2021

2023/09245 ~ Complete ~54:IN-SITU GENERATION OF THIOSULPHATE LIXIVIANT SYSTEMS AND METHODS FOR PRECIOUS METAL LEACHING AND RECOVERY ~71:SEABRIDGE GOLD INC., 106 Front Street East, Suite 400 Toronto, Canada ~72: DREISINGER, David;MELASHVILI, Mariam;SMOLIK, Theodore James~ 33:US ~31:63/174,409 ~32:13/04/2021

2023/09258 ~ Complete ~54:RNAI AGENTS FOR INHIBITING EXPRESSION OF RECEPTOR FOR ADVANCED GLYCATION END-PRODUCTS, COMPOSITIONS THEREOF, AND METHODS OF USE ~71:Arrowhead Pharmaceuticals, Inc., 177 East Colorado Boulevard, Suite 700, PASADENA 91105, CA, USA, United States of America ~72: BUSH, Erik W.;KASAHARA, David Itiro;NICHOLAS, Anthony;SCHIENEBECK, Casi M.~ 33:US ~31:63/172,301 ~32:08/04/2021;33:US ~31:63/322,603 ~32:22/03/2022

. - APPLIED ON 2023/10/04 -

2023/09275 ~ Complete ~54:TRICYCLIC PESTICIDAL COMPOUNDS ~71:BASF SE, CARL BOSCH STRASSE 38, 67056 LUDWIGSHAFEN AM RHEIN, GERMANY, Germany ~72: ADISECHAN, Ashokkumar;MAITY,

Pulakesh;NARINE, Arun;SCHROEDER, Birte;SHAIKH, Rizwan, Shabbir~ 33:IN ~31:202121009819 ~32:09/03/2021;33:EP ~31:21169544.0 ~32:21/04/2021

2023/09280 ~ Complete ~54:COMBINATION OF TALAZOPARIB AND AN ANTI-ANDROGEN FOR THE TREATMENT OF DDR GENE MUTATED METASTATIC CASTRATION-SENSITIVE PROSTATE CANCER ~71:Astellas Pharma Inc., 2-5-1, Nihonbashi-Honcho, Chuo-ku, TOKYO 103-8411, JAPAN, Japan;Pfizer Inc., 66 Hudson Boulevard East, NEW YORK 10001-2192, NY, USA, United States of America ~72: CZIBERE, Akos Gabor;KENNEDY, Dana Ann~ 33:US ~31:63/165,723 ~32:24/03/2021;33:US ~31:63/282,163 ~32:22/11/2021;33:US ~31:63/317,368 ~32:07/03/2022

2023/09285 ~ Complete ~54:A METHOD FOR MANUFACTURING CELLULOSE PRODUCTS AND A PRODUCT FORMING UNIT FOR MANUFACTURING CELLULOSE PRODUCTS ~71:PulPac AB, Amalia Jönssons gata 16, VÄSTRA FRÖLUNDA 421 31 , SWEDEN, Sweden ~72: HÖGBLOM, Olle;LARSSON, Ove;LJUNGBERG, Martin~

2023/09290 ~ Complete ~54:MICROBIOCIDAL QUINOLINE/QUINOXALINE ISOQUINOLINE DERIVATIVES ~71:Syngenta Crop Protection AG, Rosentalstrasse 67, BASEL 4058, SWITZERLAND, Switzerland ~72: MAHAJAN, Atul;PASCANU, Vlad;SEN, Indira;WEISS, Matthias~ 33:IN ~31:202111018248 ~32:20/04/2021;33:EP ~31:21181270.6 ~32:23/06/2021

2023/09268 ~ Provisional ~54:A WET/ DRY DRILL HEAD ~71:MINNAAR, Philip Petrus, 826 Klippan Street, Green Acres Estate, 163 Spear Grass Circle, Montana Ext 77, PRETORIA 0151, Gauteng, SOUTH AFRICA, South Africa;MINNAAR, Rozell, 826 Klippan Street, Green Acres Estate, 163 Spear Grass Circle, Montana Ext 77, PRETORIA 0151, Gauteng, SOUTH AFRICA, South Africa ~72: MINNAAR, Philip Petrus~

2023/09276 ~ Complete ~54:MALONAMIDES AND THEIR USE AS HERBICIDES ~71:BASF SE, CARL BOSCH STRASSE 38, 67056 LUDWIGSHAFEN AM RHEIN, GERMANY, Germany ~72: HEINRICH, Marc;KORDES, Markus;KRAEMER, Gerd;NEWTON, Trevor, William;SEISER, Tobias;ZIMMERMANN, Gunther~ 33:EP ~31:21161547.1 ~32:09/03/2021

2023/09278 ~ Complete ~54:COLLAGEN HYDROGELS USEFUL AS CELL CARRIERS ~71:VISCOFAN, S.A., Pol.Ind. Berroa - C. Berroa 15, 4a planta, Spain ~72: GUEMBE LAPUENTE, Amaia;IZCO ZARATIEGUI, Jesús Maria;RECALDE IRURZUN, José Ignacio;ZÚÑIGA ARRARÁS, Teresa~ 33:ES ~31:21382331.3 ~32:19/04/2021

2023/09282 ~ Complete ~54:NEK7 INHIBITORS ~71:Halia Therapeutics, Inc., 3900 North Traverse Mtn.Blvd, Suite 100, LEHI 84043, UT, USA, United States of America ~72: BEARSS, David James;KAUWE III, John Sai Keong;MOLLARD, Alexis Henri Abel~ 33:US ~31:63/170,708 ~32:05/04/2021;33:US ~31:63/185,282 ~32:06/05/2021

2023/09293 ~ Complete ~54:LIQUID PREPARATION OF L-SERINE OR PHARMACEUTICALLY ACCEPTABLE SALT THEREOF AND METHOD FOR PREPARING SAME ~71:ASTROGEN, INC., 440, Hyeoksin-daero, Dong-gu, Daegu, 41072, Republic of Korea ~72: HEE-SOOK NAM;HYUNG CHUL RYU;SOYOUNG KWAK;SU-KYEONG HWANG;SUN-HA CHEON~ 33:KR ~31:10-2021-0035796 ~32:19/03/2021

2023/09297 ~ Complete ~54:METHODS OF TREATING CANCER WITH ANTI-TIGIT ANTIBODIES ~71:SEAGEN INC., 21823 30th Drive SE, Bothell, Washington, 98021, United States of America ~72: ALYSON SMITH;SHYRA GARDAI~ 33:US ~31:63/173,216 ~32:09/04/2021

2023/09302 ~ Complete ~54:METHOD FOR TREATING HUMAN OR ANIMAL URINE BY DILUTION AND FERMENTATION AND USES OF THE URINE OBTAINED IN PARTICULAR AS FERTILIZING SUBSTANCE

~71:TOOPI ORGANICS, 3 Lieu-Dit aux Halies ZA Ecopole 33190, France ~72: HUGUIER, Pierre;ROES, Michael~ 33:FR ~31:FR2102613 ~32:16/03/2021

2023/09281 ~ Complete ~54:SELF-HOISTING CRANE AND METHOD OF MOUNTING AND OPERATING SUCH CRANE ~71:Liftra IP ApS, Stationsmestervej 81, AALBORG SV 9200, DENMARK, Denmark ~72: HEDEGAARD, Simon~ 33:DK ~31:PA 2021 70216 ~32:07/05/2021

2023/09284 ~ Complete ~54:MINE MATERIAL PROCESSING APPARATUS INCLUDING GAS SPRING WHEEL ASSEMBLIES AND RELATED METHODS ~71:GACW Incorporated, 3100 West Ray Road, Suite 201, CHANDLER 85226, AZ, USA, United States of America ~72: KEMENY, Zoltan~ 33:US ~31:63/162,241 ~32:17/03/2021;33:US ~31:17/693,375 ~32:13/03/2022

2023/09289 ~ Complete ~54:CORONAVIRUS VACCINE FORMULATIONS ~71:Novavax, Inc., 21 Firstfield Road, GAITHERSBURG 20878 , MD, USA, United States of America ~72: MASSARE, Michael J.;SMITH, Gale;TIAN, Jing-Hui~ 33:US ~31:63/164,487 ~32:22/03/2021;33:US ~31:63/176,825 ~32:19/04/2021;33:US ~31:63/177,059 ~32:20/04/2021;33:US ~31:63/195,986 ~32:02/06/2021;33:US ~31:63/280,395 ~32:17/11/2021;33:US ~31:63/290,439 ~32:16/12/2021;33:US ~31:63/292,196 ~32:21/12/2021;33:US ~31:63/293,468 ~32:23/12/2021

2023/09296 ~ Complete ~54:ANTI-CD122 ANTIBODIES AND USES THEREOF ~71:VILLARIS THERAPEUTICS, INC., 2500 Regency Parkway, Cary, North Carolina, 27518, United States of America ~72: JOHN E HARRIS;WILLIAM JAMES JONATHAN FINLAY~ 33:US ~31:63/174,772 ~32:14/04/2021;33:US ~31:63/279,762 ~32:16/11/2021

2023/09301 ~ Complete ~54:SUPPORTED NICOTINE COMPOSITION ~71:ZANOPRIMA LIFESCIENCES LIMITED, 31 Kentish Town Road, United Kingdom ~72: BONDU, Vinod Kumar Reddy;CASSELS-SMITH, George;JACKSON, William;MCCAGUE, Raymond;NARASIMHAN, Ashok Srinivasan~ 33:GB ~31:2105305.3 ~32:14/04/2021

2023/09303 ~ Provisional ~54:JOINADAPTOR JOINS 6INCH LAMPHOLDER TO 8INCH LAMPSHADE ~71:IPELENG GIFT MOATSHE, 433 Buiten Drive, South Africa ~72: IPELENG GIFT MOATSHE~

2023/09619 ~ Provisional ~54:REDEEM FUNDS (MONEY TRANSFER SERVICE) TO DIGITAL WALLET USING MULTI-BANK INTEGRATION. ~71:Katleho Roto, 51 Erica street, Arcon Park, Vereeniging,1939, Arcon Park, South Africa;Tshepang Lelosa, 46 Johannesburg road, Arcon Park, Vereeniging,1939, Arcon Park, South Africa ~72: Katleho Roto;Tshepang Lelosa~

2023/09300 ~ Complete ~54:PHOSPHATE-FREE BAKING POWDER ~71:PURATOS NV, Industrialaan 25, Belgium ~72: BOSMANS, Geertrui;PAREYT, Bram~ 33:BE ~31:BE2021/5325 ~32:27/04/2021

2023/09266 ~ Provisional ~54:SWIMMING POOL CLEANER ~71:INTEGRATED POOL PRODUCTS (PTY) LTD, 70 Driefontein Road,, South Africa ~72: JUBBER, Wesley~

2023/09267 ~ Provisional ~54:PERCUTANEOUS ACCESS DEVICE ~71:BECKER, Gert Stephanus, 1378b Breyer Avenue, Waverley, South Africa ~72: BECKER, Gert Stephanus~

2023/09271 ~ Complete ~54:PELLETIZATION OF A POLYMER STABILIZER MIXTURE ~71:BASF SE, CARL BOSCH STRASSE 38, 67056 LUDWIGSHAFEN AM RHEIN, GERMANY, Germany ~72: GFROERER, Thomas, Georg~ 33:EP ~31:21161643.8 ~32:09/03/2021

2023/09274 ~ Complete ~54:PROCESS FOR PRODUCING OPEN-CELL RIGID POLYURETHANE FOAMS ~71:BASF SE, CARL BOSCH STRASSE 38, 67056 LUDWIGSHAFEN AM RHEIN, GERMANY, Germany ~72: KALUSCHKE, Tobias;KLASSEN, Johann;WAGNER, Hendrik~ 33:EP ~31:21161602.4 ~32:09/03/2021

2023/09279 ~ Complete ~54:NUCLEAR REACTOR WITH A HEAVY LIQUID METAL COOLANT ~71:AKME ENGINEERING "JOINT STOCK COMPANY", ul. Pyatnitskaya, dom 13, Stroenie 1, Russian Federation, Russian Federation ~72: ARSEN'EV, Urii Aleksandrovich;DEDYL, Aleksandr Vladislavovich;GRIGOR'EV, Sergey Aleksandrovich;KOMLEV, Oleg Gennad'evich;SAMKOTRYASOV, Sergey Vladimirovich;STEPANOV, Vladimir Sergeevich;TOSHINSKII, Georgii Il'ich;VAHRUSHIN, Mihail Petrovich~ 33:RU ~31:2021106582 ~32:15/03/2021

2023/09283 ~ Complete ~54:PSEUDORABIES VIRUS VACCINE ~71:Zoetis Services LLC, 10 Sylvan Way, PARSIPPANY 07054, NJ, USA, United States of America ~72: HUANG, JinAn;KONG, YiBo;LIU, QiaoRan;SUN, Dong~ 33:CN ~31:202110412008.9 ~32:16/04/2021

2023/09287 ~ Complete ~54:CORONAVIRUS VACCINE COMPRISING A MOSAIC PROTEIN ~71:VaxThera SAS, Cra. 64 B N° 49 A 30, MEDELLIN, COLOMBIA, Colombia ~72: OSORIO, Jorge E.~ 33:US ~31:63/172,495 ~32:08/04/2021;33:US ~31:63/263,131 ~32:27/10/2021;33:US ~31:63/301,417 ~32:20/01/2022

2023/09292 ~ Complete ~54:METHOD OF INCREASING SUGAR PRODUCTION FROM SUGARCANE ~71:CORTEVA AGRISCIENCE LLC, 9330 Zionsville Road, Indianapolis, Indiana, 46268, United States of America ~72: CAIO VITAGLIANO SANTI ROSSI;LUCAS PERIM;LUIS ANTONIO PAVAN~ 33:US ~31:63/175,646 ~32:16/04/2021

2023/09295 ~ Complete ~54:BOVINE COLOSTRUM DERIVED ANTIBODIES AND USES THEREOF ~71:ICOSAGEN CELL FACTORY OÜ, Eerika tee 1 61713 Õssu, Ülenurme, Tartumaa, Estonia ~72: ANDRES MÄNNIK;ANDRES TOVER;ANTS KAVAK;ANU PLANKEN;BIRGIT AASMÄE;EVA ŽUSINAITE;EVE SANKOVSKI;JOACHIM GERHOLD;KADRI KANGRO;KARIN KOGERMANN;KIIRA GILDEMANN;LEMBIT LEPASALU;MARIO PLAAS;MART JR USTAV;MART USTAV;MIHHAIL MIHHAIL KURAŠIN;RAINI PERT;RUTH OLTJER;SANDER PIISKOP;SIIMU ROM;TOOMAS TIIRATS;VÄINÖ POIKALAINEN~ 33:US ~31:63/160,833 ~32:14/03/2021

2023/09273 ~ Complete ~54:TERMINAL, BASE STATION, AND COMMUNICATION METHOD ~71:PANASONIC INTELLECTUAL PROPERTY CORPORATION OF AMERICA, 2050 W 190TH STREET SUITE 450, TORRANCE, CA 90504, USA, United States of America ~72: OGAWA, Yoshihiko;SUZUKI, Hidetoshi;YAMAMOTO, Tetsuya~ 33:JP ~31:2021-064901 ~32:06/04/2021

2023/09277 ~ Complete ~54:BLADE NOISE REDUCTION DEVICE, BLADE, AND WIND TURBINE GENERATOR SET ~71:JIANGSU GOLDWIND SCIENCE & TECHNOLOGY CO., LTD., No.5, Jinhai Road, Economic & Technological Development Zone, People's Republic of China ~72: HAO, Zhuang;JIA, Shaohong;LIU, Qiuge;ZHAO, Xiong~ 33:CN ~31:202110350190.X ~32:31/03/2021

2023/09288 ~ Complete ~54:YEAST STRAIN DEVELOPMENT FOR ETHANOL PRODUCTION ~71:AB Mauri, 4240 Duncan Ave., Ste. 150, ST. LOUIS 63110 , MI, USA, United States of America;Katholieke Universiteit Leuven, Katholieke Universiteit Leuven, K.U.Leuven R&D, Waaistraat 6, LEUVEN 3000 , BELGIUM, Belgium;VIB vzw, Rijvisschestraat 120, GENT 9052, BELGIUM, Belgium ~72: EVANS IV, John H.;MCKERRACHER, Aaron J.;STEENSELS, Jan;VERSTREPEN, Kevin J.~ 33:US ~31:63/170,884 ~32:05/04/2021

2023/09291 ~ Complete ~54:ANTI-ALPP/ALPPL2 ANTIBODIES AND ANTIBODY-DRUG CONJUGATES ~71:SEAGEN INC., 21823 30th Drive SE, Bothell, Washington, 98021, United States of America ~72: DIVYA AWASTHI;ERIN MARGARET SCHERER;HECTOR DE JESUS RINCON ARANO;LORI WESTENDORF;NICOLE OKELEY;NOAH BINDMAN;PETER SENTER;SARAH ANN RIORDAN ANDERSON~ 33:US ~31:63/162,635 ~32:18/03/2021;33:US ~31:63/301,574 ~32:21/01/2022

2023/09299 ~ Complete ~54:FLEXOGRAPHIC PRINTING ~71:PMD Dies & Stereos Proprietary Limited, No. 4 Nebula Street, Labore, BRAKPAN 1541, Gauteng Province, SOUTH AFRICA, South Africa ~72: ZEVENBERGEN, LEON MARE (Deceased)~ 33:ZA ~31:2021/02311 ~32:08/04/2021;33:ZA ~31:2021/06173 ~32:26/08/2021

2023/09270 ~ Complete ~54:CELL SELECTION METHODS AND RELATED COMPOSITIONS ~71:THE BOARD OF TRUSTEES OF THE LELAND STANFORD JUNIOR UNIVERSITY, Office of the General Counsel, Building 170, 3rd Floor, Main Quad, P.O. Box 20386, United States of America ~72: LABANIEH, Louai;MACKALL, Crystal;MAJZNER, Robbie~ 33:US ~31:63/171,841 ~32:07/04/2021

2023/09272 ~ Complete ~54:PELLETIZATION OF A POLYMER STABILIZER MIXTURE ~71:BASF SE, CARL BOSCH STRASSE 38, 67056 LUDWIGSHAFEN AM RHEIN, GERMANY, Germany ~72: GFROERER, Thomas, Georg~ 33:EP ~31:21161644.6 ~32:09/03/2021

2023/09286 ~ Complete ~54:A COMPONENT FOR AN ARTICLE FOR USE IN AN AEROSOL PROVISION SYSTEM ~71:Nicoventures Trading Limited, Globe House, 1 Water Street, LONDON WC2R 3LA, UNITED KINGDOM, United Kingdom ~72: GRISHCHENKO, Andrei~ 33:GB ~31:2103577.9 ~32:15/03/2021;33:GB ~31:2109118.6 ~32:24/06/2021

2023/09294 ~ Complete ~54:METHOD OF INHIBITING FLOWERING OF SUGARCANE ~71:CORTEVA AGRISCIENCE LLC, 9330 Zionsville Road, Indianapolis, Indiana, 46268, United States of America ~72: CAIO VITAGLIANO SANTI ROSSI;LUCAS PERIM;MAURICIO MORELL;NELSON M CARRANZA GARZON~ 33:US ~31:63/175,652 ~32:16/04/2021

2023/09298 ~ Complete ~54:FLOW CELL AND METHODS ~71:ILLUMINA CAMBRIDGE LIMITED, 19 Granta Park, Great Abington, Cambridge, Cambridgeshire, CB21 6DF, United Kingdom ~72: ANDREW A BROWN;WAYNE N GEORGE~ 33:US ~31:63/182,370 ~32:30/04/2021

. - APPLIED ON 2023/10/05 -

2023/09319 ~ Complete ~54:IMMOBILIZED MICROBES FOR WATER TREATMENT ~71:Novozymes A/S, Krogshoejvej 36, BAGSVAERD 2880, DENMARK, Denmark ~72: ANDRIC, Pavle;FINDEISEN, Alexander;GURIEFF, Nicholas Bagger;HOBEL, Cédric;SOERENSEN, Sebastian Reinhold~ 33:EP ~31:21170527.2 ~32:26/04/2021

2023/09324 ~ Complete ~54:ALKALI-RESISTANT NONCRYSTALLINE INORGANIC COMPOSITION AND FIBER THEREOF ~71:NIPPON FIBER CORPORATION, 2373-2, Fuse, Abiko-City, Chiba 2701162, Japan ~72: HIROSHI FUKAZAWA;YOSHIYA UWATOKO~ 33:JP ~31:2021-064565 ~32:06/04/2021

2023/09331 ~ Complete ~54:AGRICULTURAL COMPOSITION FOR ENHANCED SILICON UPTAKE AND DISTRIBUTION IN PLANTS ~71:LEVITY CROP SCIENCE LTD, Rural Business Centre, Myerscough College, Bilsborrow, United Kingdom ~72: MARKS, David;WESTON, Anna~ 33:GB ~31:2102806.3 ~32:26/02/2021

2023/09332 ~ Provisional ~54:MOBILE BUFFING MACHINE ~71:Thuso Kgwathe, 2360 Falcon Street, South Africa ~72: Thuso Kgwathe~

2023/09325 ~ Complete ~54:COMPOSITIONS AND METHODS FOR RAPID COVID-19 DETECTION ~71:DUKE UNIVERSITY, 2812 Erwin Road Suite 406, Durham, North Carolina, 27705, United States of America ~72: JOHN REIF;XIN SONG~ 33:US ~31:63/164,098 ~32:22/03/2021

2023/09313 ~ Complete ~54:METHOD AND SYSTEM FOR STEAMCRACKING ~71:LINDE GMBH, Dr.-Carl-von-Linde-Strasse 6-14, Germany ~72: HÖRENZ, Michael;MAYER, Sebastian;SINN, Tobias;ZELLHUBER, Mathieu~ 33:EP ~31:21161749.3 ~32:10/03/2021

2023/09317 ~ Complete ~54:SMALL MOLECULE INHIBITORS OF MAMMALIAN SLC6A19 FUNCTION ~71:Jnana Therapeutics Inc., 6 Tide Street, BOSTON 02210, MA, USA, United States of America ~72: ANTALEK, Mitchell T.;BROWN, Dean G.;HENDERSON, Jaclyn L.;HOLLIBAUGH, Ryan A.;MUNCIPINTO, Giovanni;NGUYEN, Long V.;PULLEN, Nicholas;ZWEIG, Joshua E.~ 33:US ~31:63/159,271 ~32:10/03/2021;33:US ~31:63/226,551 ~32:28/07/2021;33:US ~31:63/234,487 ~32:18/08/2021;33:US ~31:63/292,815 ~32:22/12/2021;33:US ~31:63/308,790 ~32:10/02/2022

2023/09322 ~ Complete ~54:NEW YEAST STRAIN AND ITS USES FOR THE CONTROL OF PHYTOPATHOGENS ~71:AGROVENTURES S.R.L., Piazza B. Buozzi, 9, 04100, Latina, Italy ~72: BRUNO FOLCHI;DAVIDE PALMIERI;FILIPPO DE CURTIS;GIUSEPPE IANIRI;GIUSEPPE LIMA;RAFFAELLO CASTORIA;VINCENZO DE CICCO~ 33:IT ~31:102021000009128 ~32:12/04/2021

2023/09323 ~ Complete ~54:ELECTRODE FOR GAS EVOLUTION IN ELECTROLYTIC PROCESSES ~71:INDUSTRIE DE NORA S.P.A., Via Bistolfi 35, 20134, Milan, Italy ~72: CHIARA DI BARI;DJ DONN MATIENZO;EMANUELE INSTULI;FRANCESCO PINO~ 33:EP ~31:21162974.6 ~32:16/03/2021

2023/09306 ~ Provisional ~54:A FOOT COVERING ~71:MANIFEST MANUFACTURE (PTY) LTD, 11 Hampton Court, 167 Main Road, Greenpoint, South Africa ~72: SKINNER, Wade Ross~

2023/09311 ~ Complete ~54:A METHOD OF FRACTIONATING A LIPID CONTAINING MATERIAL OBTAINED FROM AN INSECT SOURCE ~71:UNIVERSITY OF THE WESTERN CAPE, Robert Sobukwe Road, Bellville, Cape Town, Western Cape, 7535, South Africa ~72: LESLIE FELICIA PETRIK;RAISSA OKWUOSA~ 33:ZA ~31:2022/12250 ~32:10/11/2022

2023/09316 ~ Complete ~54:A COMPONENT FOR AN ARTICLE FOR USE IN AN AEROSOL PROVISION SYSTEM ~71:Nicoventures Trading Limited, Globe House, 1 Water Street, LONDON WC2R 3LA, UNITED KINGDOM, United Kingdom ~72: GRISHCHENKO, Andrei~ 33:GB ~31:2103576.1 ~32:15/03/2021;33:GB ~31:2109120.2 ~32:24/06/2021

2023/09326 ~ Complete ~54:PROCESS AND APPARATUS FOR REMOVING IMPURITIES FROM CRYSTALLIZED METAL SULFATES ~71:HATCH LTD., 2800 Speakman Drive, Mississauga, Ontario, L5K 2R7, Canada ~72: ADAM BEST;ALEXANDER SUTHERLAND;ANDREW DOOLITTLE;FIRSYA RISANDI;ROBERT JOHN FRASER~ 33:US ~31:63/165,806 ~32:25/03/2021

2023/09328 ~ Complete ~54:A SYNERGISTIC PLANT GROWTH STIMULANT COMPOSITION COMPRISING POTASSIUM MONO/DIFORMATE AND METAL ION COMPOUNDS TO ENHANCED METABOLIC ACTIVITIES IN PLANTS ~71:FERTIS INDIA PVT. LTD., 6-3-668/10/56, Plot No 56, 1st Floor, Durga Nagar Colony, Punjagutta, Hyderabad, Telangana, 500082, India ~72: GEORGE KOCHUMALAYIL SHAJI;LAKSHMI PRASANNA KUMAR GARUDADRI;RAHUL RAJU KANUMURU;RAVIKUMAR SURANENI;SIL ANINDYA~ 33:IN ~31:202141015142 ~32:31/03/2021

2023/09329 ~ Complete ~54:AUTONOMOUS VEHICLE SAFETY SYSTEM AND METHOD ~71:GUSS Automation LLC, 2545 Simpson Street, United States of America ~72: CRINKLAW, David;SCHAPANSKY, Chase;THOMPSON, Gary~

2023/09330 ~ Complete ~54:METHOD FOR ANALYZING A BLOOD SAMPLE FOR A DISEASE ~71:LABOR BERLIN - CHARITÉ VIVANTES SERVICES GMBH, Sylter StraBe 2, Germany ~72: MANTEI, Andrej;MEISEL, Christian;MEYER, Tim;SCHEFFOLD, Alexander~ 33:DE ~31:10 2021 203 480.2 ~32:08/04/2021

2023/09310 ~ Provisional ~54:BEVERAGE CAN TOP END WITH CENTRAL LOW RISE SPOUT AND RESEALABLE THREAD ~71:Martin Hempel, Endeavour Farm, South Africa ~72: Martin Hempel~

2023/09320 ~ Complete ~54:FOOD PRODUCTS COMPRISING FILAMENTOUS FUNGAL MATERIAL ~71:The Fynder Group, Inc., 815 West Pershing Road, Suite 4, CHICAGO 60609, IL, USA, United States of America ~72: AVNIEL, Yuval;CARRE, Eric;ECKSTROM, Eleanore Brophy;GHOTRA, Baljit;KAWABATA, Jessica;KLOPF, Brian~ 33:US ~31:63/164,466 ~32:22/03/2021

2023/09327 ~ Complete ~54:PCNA INHIBITORS AND EGFR INHIBITORS FOR CANCER TREATMENT ~71:CITY OF HOPE, 1500 E. Duarte Road, Duarte, California, 91010-3000, United States of America ~72: LINDA H MALKAS;ROBERT J HICKEY;ROBERT LINGEMAN~ 33:US ~31:63/182,408 ~32:30/04/2021

2023/09305 ~ Provisional ~54:ADVANCED TOILET SYSTEM FOR WASTE SEGREGATION ~71:Stuart Cameron, 60 Irol Street, South Africa ~72: Stuart Cameron~

2023/09309 ~ Provisional ~54:SELF REGULATING REACTOR ~71:Jacobus Johannes van der Merwe, 1060 Pierneef Street, Villieria, South Africa ~72: Jacobus Johannes van der Merwe~

2023/09307 ~ Provisional ~54:CONNECTOR FOR A TOOL ~71:JOHANN MARTHINUS STASSEN, 9 JEFFREY STREET, South Africa ~72: JOHANN MARTHINUS STASSEN~

2023/09314 ~ Complete ~54:EFFICIENT VOXELIZATION FOR DEEP LEARNING ~71:ILLUMINA CAMBRIDGE LIMITED, 19 Granta Park, Great Abington, United Kingdom;ILLUMINA, INC., 5200 Illumina Way, United States of America ~72: FARH, Kai-How;GAO, Hong;HAMP, Tobias~ 33:US ~31:63/175,495 ~32:15/04/2021;33:US ~31:17/703,935 ~32:24/03/2022;33:US ~31:17/703,958 ~32:24/03/2022;33:US ~31:63/175,767 ~32:16/04/2023

2023/09315 ~ Complete ~54:DEVICE AND PROCESS FOR COOLING A FLOW OF A TARGET FLUID PREDOMINANTLY COMPRISING DIHYDROGEN, AND ASSOCIATED USE THEREOF ~71:ENGIE, 1 Place Samuel de Champlain, COURBEVOIE 92400, FRANCE, France ~72: FILALI, Hamza;HUBERT, Audrey;JALIA, Florian~ 33:FR ~31:2104594 ~32:30/04/2021

2023/09312 ~ Complete ~54:ROCK BOLT ANCHORING DEVICE ~71:OLIVIER, Jacob Petrus Stephanus, 5 van der Bijl Street, South Africa;WEIDEMAN, George, 5 van der Bijl Street, South Africa ~72: OLIVIER, Jacob Petrus Stephanus;WEIDEMAN, George~ 33:ZA ~31:2021/02428 ~32:14/04/2021

2023/09318 ~ Complete ~54:A COMPONENT FOR AN ARTICLE FOR USE IN AN AEROSOL PROVISION SYSTEM ~71:Nicoventures Trading Limited, Globe House, 1 Water Street, LONDON WC2R 3LA, UNITED KINGDOM, United Kingdom ~72: GRISHCHENKO, Andrei~ 33:GB ~31:2103577.9 ~32:15/03/2021

2023/09431 ~ Provisional ~54:FINDER FOUND SMART SPECTACLES FOR FINDING OBJECT ~71:Ipeleng Gift Moatshe, 433 Buiten Drive Unit 2, South Africa ~72: IPELENG GIFT MOATSHE~

2023/09308 ~ Provisional ~54:CONNECTOR FOR AN OPINEL POCKETKNIFE ~71:JOHANN MARTHINUS STASSEN, 9 JEFFREY STREET, South Africa ~72: JOHANN MARTHINUS STASSEN~

2023/09321 ~ Complete ~54:PHARMACEUTICAL COMPOSITIONS COMPRISING ZOLMITRIPTAN ~71:MapLight Therapeutics, Inc., 501 2nd Street, SAN FRANCISCO 94107, CA, USA, United States of America ~72: LILLIE, James;WOOD, Michael~ 33:US ~31:63/165,938 ~32:25/03/2021;33:US ~31:63/306,377 ~32:03/02/2022

. - APPLIED ON 2023/10/06 -

2023/09358 ~ Complete ~54:AEROSOL PROVISION SYSTEM ~71:Nicoventures Trading Limited, Globe House, 1 Water Street, LONDON WC2R 3LA, UNITED KINGDOM, United Kingdom ~72: ERGUVEN, Nejat~ 33:GB ~31:2105103.2 ~32:09/04/2021

2023/09367 ~ Complete ~54:OPTICAL-COUPLING NON-CONTACT COMMUNICATION SLIP RING FOR WIND TURBINE ~71:ENVISION ENERGY CO., LTD, No.3 Shenzhuang Road, Shengang Street Wuxi, Jiangsu, 214443, People's Republic of China ~72: CUIXIA ZHANG;HAIPENG CHEN;PENG ZHAO;ZILIN ZHAO~ 33:CN ~31:202110358909.4 ~32:01/04/2021

2023/09368 ~ Complete ~54:LENTIVIRAL VECTOR, LENTIVIRAL PARTICLE FOR TREATING HEPATITIS B AND ITS PREPARATION METHOD AND APPLICATION THEREOF ~71:INSTITUT PASTEUR, 25-28 rue du Docteur Roux, 75724, Paris Cedex 15, France;SHANGHAI JINWEI BIOTECHNOLOGY CO., LTD., Room 1304-1305, 781 Cailun Road Pudong, Shanghai, 201203, People's Republic of China;THERAVECTYS, Bâtiment Pasteur Biotop 28 rue du Docteur Roux, 75724, Paris Cedex 15, France ~72: BENJAMIN VESIN;CHAO QIU;MARYLINE BOURGINE;PIERRE ALAIN CHARNEAU;YE TIAN~ 33:CN ~31:202110374234.2 ~32:07/04/2021

2023/09350 ~ Complete ~54:GAS ATOMIZER ~71:ARCELORMITTAL, 24-26, Boulevard d'Avranches, Luxembourg ~72: Benjamin BOISSIERE~ 33:IB ~31:PCT/IB2021/053518 ~32:28/04/2021

2023/09354 ~ Complete ~54:PHARMACEUTICAL DOSAGE FORMS COMPRISING (4S)-24-CHLORO-4-ETHYL-7³-FLUORO-35-METHOXY-3²,5-DIOXO-14-(TRIFLUOROMETHYL)-3²H-6-AZA-3(4,1)-PYRIDINA-1(1)-[1,2,3]TRIAZOLA-2(1,2),7(1)-DIBENZENAHEPTAPHANE-74-CARBOXAMIDE ~71:Bayer Aktiengesellschaft, Kaiser-Wilhelm-Allee 1, LEVERKUSEN 51373, GERMANY, Germany ~72: MERKEL, Susanne;SERNO, Peter~ 33:EP ~31:21161493.8 ~32:09/03/2021

2023/09344 ~ Complete ~54:FRAGMENTATION GEOREFERENCING ~71:ORICA INTERNATIONAL PTE LTD, 78 Shenton Way, #06-15 Tower 2, Singapore ~72: CHEN, Benny;KIRBY, Meyrick;ODY, Michael~ 33:AU ~31:2021901147 ~32:19/04/2021

2023/09362 ~ Complete ~54:REDUCED-HEADSPACE DIGESTER ~71:Suez International, 16 Place de l'Iris, Tour CB21, PARIS 92040, LA DEFENSE CEDEX, FRANCE, France ~72: BENARD GUEDES LOPES DA FONSECA, Pedro;BERLOU, Cynthia;GEAUGEY, Valéry;HADDAD, Mathieu;LIPP, Manuel~ 33:FR ~31:2102210 ~32:08/03/2021

2023/09374 ~ Complete ~54:TRUSTED CUSTODY CHAIN FOR VERIFIABLE CLAIMS ~71:MICROSOFT TECHNOLOGY LICENSING, LLC, One Microsoft Way, Redmond, Washington, 98052-6399, United States of America ~72: ANKUR PATEL;BRANDON BRIAN MURDOCH;ERIC CHRISTOPHER SACHS~ 33:US ~31:17/334,869 ~32:31/05/2021

2023/09361 ~ Complete ~54:TREATMENT OF CANCERS LACKING EGFR-ACTIVATING MUTATIONS ~71:Janssen Biotech, Inc., 800/850 Ridgeview Drive, HORSHAM 19044, PA, USA, United States of America ~72: HENLEY, Benjamin J.;MOORES, Sheri L.~ 33:US ~31:63/158,552 ~32:09/03/2021

2023/09369 ~ Complete ~54:LIGNIN-BASED COMPOSITIONS AND RELATED METHODS ~71:LIGNOSOL IP LIMITED, 4th Floor, Avantech Building, St Julian's Road, San Gwann SGN, 2805, Malta ~72: DESMOND ALEXANDER SOMERVILLE;PATRICK DIETER WAIBEL~ 33:GB ~31:2104877.2 ~32:06/04/2021;33:GB ~31:2115987.6 ~32:08/11/2021

2023/09373 ~ Complete ~54:HYDRATABLE CONCENTRATED SURFACTANT COMPOSITION SUBSTANTIALLY FREE OF ISETHIONATES ~71:UNILEVER GLOBAL IP LIMITED, Port Sunlight, Wirral, Merseyside, CH62 4ZD, United Kingdom ~72: DOUGLAS JOHN HIBAN;TEANOOSH MOADDEL;TIRUCHERAI VARAHAN VASUDEVAN~ 33:EP ~31:21171969.5 ~32:04/05/2021

2023/09333 ~ Provisional ~54:SYNCHRONOUS MACHINE WITH STATIONARY FIELD COILS ~71:PolyWavePower IP Proprietary Limited, 64 Liesbeek Road, Rosebank, Cape Town 7700, Western Cape, SOUTH AFRICA, South Africa ~72: IGNJATOVIC, Dragan~

2023/09335 ~ Complete ~54:COMPOSITIONS FOR THE DELIVERY OF THERAPEUTIC AGENTS AND METHODS OF USE AND MAKING THEREOF ~71:DISRUPTION LABS INC., 8201 East Riverside Drive, Suite 650, United States of America ~72: SANDOVAL, Michael A.;SLOAT, Brian R.;WEST, Tyler B.~ 33:US ~31:62/778,132 ~32:11/12/2018;33:US ~31:62/846,474 ~32:10/05/2019;33:US ~31:62/857,567 ~32:05/06/2019;33:US ~31:62/889,824 ~32:21/08/2019;33:US ~31:62/916,754 ~32:17/10/2019

2023/09342 ~ Complete ~54:METHOD AND APPARATUS FOR THE PRODUCTION OF HIGH PURITY SPHERICAL METALLIC POWDERS FROM A MOLTEN FEEDSTOCK ~71:PYROGENESIS CANADA INC., 1744 Rue William Suite 200 Montréal, Canada ~72: ALLARD, Bernard;CARABIN, Pierre;DORVAL DION, Christopher Alex;MARDAN, Milad;PROULX, François~ 33:US ~31:62/644,459 ~32:17/03/2018

2023/09343 ~ Complete ~54:MULTI-CHANNEL PROTEIN VOXELIZATION TO PREDICT VARIANT PATHOGENICITY USING DEEP CONVOLUTIONAL NEURAL NETWORKS ~71:ILLUMINA CAMBRIDGE LIMITED, 19 Granta Park, Great Abington, United Kingdom;ILLUMINA, INC., 5200 Illumina Way, United States of America ~72: FARH, Kai-How;GAO, Hong;HAMP, Tobias~ 33:US ~31:63/175,495 ~32:15/04/2021;33:US ~31:63/175,767 ~32:16/04/2021;33:US ~31:17/703,935 ~32:24/03/2022;33:US ~31:17/703,958 ~32:24/03/2022

2023/09346 ~ Complete ~54:GAS ATOMIZATION OF MOLTEN STEEL ~71:ARCELORMITTAL, 24-26, Boulevard d'Avranches, Luxembourg ~72: Alejandro CARO GUTIERREZ;Enrique HERRAIZ LALANA;Mathieu COUVRAT;Pallava KAUSHIK~

2023/09352 ~ Complete ~54:METHOD OF MANUFACTURING OF A STEEL PART ~71:ARCELORMITTAL, 24-26, Boulevard d'Avranches, Luxembourg ~72: Astrid PERLADE;Aude NADLER;Frédéric KEGEL;Kangying ZHU;Michel SOLER;Pierrick FORT~

2023/09355 ~ Complete ~54:CRYSTALLINE FORMS OF (4S)-24-CHLORO-4-ETHYL-7³-FLUORO-35-METHOXY-3²,5-DIOXO-14-(TRIFLUOROMETHYL)-3²H-6-AZA-3(4,1)-PYRIDINA-1(1)-[1,2,3]TRIAZOLA-2(1,2),7(1)-5 DIBENZENAHEPTAPHANE-74-CARBOXAMIDE ~71:Bayer Aktiengesellschaft, Kaiser-Wilhelm-Allee 1, LEVERKUSEN 51373, GERMANY, Germany ~72: JACOBS, Tia;LEVILAIN, Guillaume;OLENIK, Britta;RÖHRIG, Susanne;RUBINO, Franco;SOWA, Michal;ZIEM, Krischan~ 33:EP ~31:21161489.6 ~32:09/03/2021

2023/09363 ~ Complete ~54:LIQUID COMPOSITION COMPRISING A NEONICTONOID ~71:UPL Corporation Limited, 6th Floor, Suite 157B, Harbor Front Building, President John Kennedy Street, PORT LOUIS, MAURITIUS, Mauritius;UPL Europe Ltd, The Centre, 1st Floor, Birchwood Park, WARRINGTON WA3 6YN, CHESHIRE, UNITED KINGDOM, United Kingdom ~72: MATHADEEN, Prileen;PIROTTE, Alan~ 33:IN ~31:202121010121 ~32:10/03/2021

2023/09372 ~ Complete ~54:LIGNIN-BASED FRACTURING FLUIDS AND RELATED METHODS ~71:LIGNOSOL IP LIMITED, 4th Floor, Avantech Building, St Julian's Road, San Gwann SGN, 2805, Malta ~72: DESMOND ALEXANDER SOMERVILLE;PATRICK DIETER WAIBEL~ 33:GB ~31:2104859.0 ~32:06/04/2021;33:GB ~31:2115987.6 ~32:08/11/2021

2023/09375 ~ Complete ~54:PACKAGE CONTAINING WATER-SOLUBLE CAPSULES ~71:UNILEVER GLOBAL IP LIMITED, Port Sunlight, Wirral, Merseyside, CH62 4ZD, United Kingdom ~72: KIERAN DEAN OWENS;ROSS DAVID ASHTON~ 33:EP ~31:21173808.3 ~32:14/05/2021

2023/09347 ~ Complete ~54:METHOD AND PLANT FOR STEAM CRACKING ~71:LINDE GMBH, Dr.-Carl-von-Linde-Strasse 6-14, Germany ~72: BRUDER, David;EBERSTEIN, Christopher;GLOMB, Stefan;HÖRENZ, Michael;ZELLHUBER, Mathieu~ 33:EP ~31:21161729.5 ~32:10/03/2021

2023/09353 ~ Complete ~54:PARTIAL-RESONANT CONVERTERS FOR PV APPLICATIONS ~71:ENPHASE ENERGY, INC., 1420 North McDowell Boulevard Petaluma,, United States of America ~72: CHAPMAN, Patrick Lyle;MOZAFFARI, Khalegh;RODRIGUEZ, Fernando~ 33:US ~31:63/159,415 ~32:10/03/2021

2023/09349 ~ Complete ~54:INSTALLATION FOR THE PRODUCTION OF METAL POWDERS ~71:ARCELORMITTAL, 24-26, Boulevard d'Avranches, Luxembourg ~72: Enrique HERRAIZ LALANA;Udaya Bhaskar KODUKULA~ 33:IB ~31:PCT/IB2021/053456 ~32:27/04/2021

2023/09357 ~ Complete ~54:PKC-THETA MODULATORS ~71:Exscientia AI Limited, The Schrödinger Building, Oxford Science Park, OXFORD OX4 4GE, UNITED KINGDOM, United Kingdom ~72: BESNARD, Jeremy;BRADLEY, Anthony;MENEYROL, Jérôme;RAY, Peter;RICHARDS, Simon;SANTOS, Catarina;SUCHAUD, Virginie~ 33:GB ~31:2106485.2 ~32:06/05/2021

2023/09365 ~ Complete ~54:NON-VIRAL HOMOLOGY MEDIATED END JOINING ~71:ARSENAL BIOSCIENCES, INC., 329 Oyster Point Blvd, United States of America ~72: COOPER, Aaron;GARDNER, Thomas;HSU, Brian;HSU, Pei-Ken;MOOT, Robert;TRUONG, Annie~ 33:US ~31:63/174,468 ~32:13/04/2021

2023/09760 ~ Complete ~54:EXPANDABLE PROSTHETIC HEART VALVE WITH FLATTENED APICES ~71:Edwards Lifesciences Corporation, One Edwards Way, IRVINE 92614, CA, USA, United States of America ~72: GUROVICH, Nikolay;LAVON, Karin;LEVI, Tamir S.;SHERMAN, Elena~ 33:US ~31:63/178,416 ~32:22/04/2021;33:US ~31:63/194,830 ~32:28/05/2021;33:US ~31:63/279,096 ~32:13/11/2021

2023/09359 ~ Complete ~54:WATER TREATMENT MODULES AND METHOD OF USE THEREOF ~71:Renew Health Limited, IDA Business & Technology Park, Garrycastle, Dublin Road, ATHLONE N37 F786, CO WESTMEATH, IRELAND, Ireland ~72: ALDANA, Victor;DUPUIS, Jeff;JUNI, Jack;O'BRIEN, Mitch;REESBECK, Thomas;RUFFOLO, Alex;TALLY, William N.~ 33:US ~31:63/157,804 ~32:07/03/2021;33:US ~31:63/157,994 ~32:08/03/2021

2023/09366 ~ Complete ~54:GIP AND GLP-1 DUAL RECEPTOR AGONIST, PHARMACEUTICAL COMPOSITION, AND USE ~71:BRIGHTGENE BIO-MEDICAL TECHNOLOGY CO., LTD., Building C25, No.218 Xinghu Street, Bio-Bay Suzhou Industrial Park, Suzhou, Jiangsu, 215123, People's Republic of China;BRIGHTGENE PHARMACEUTICAL (SUZHOU) CO. LTD., Building C25, Building C26, Building C27,

Building C28, No.218 Xinghu Street Suzhou Industrial Park, Suzhou, Jiangsu, 215123, People's Republic of China ~72: JIANDONG YUAN;JIANING GU;WENTENG ZHEN;YANGQING HUANG;YUE CAI;YUNSONG SONG~ 33:CN ~31:202110321851.6 ~32:25/03/2021;33:CN ~31:202110553745.0 ~32:20/05/2021

2023/09371 ~ Complete ~54:LIGNIN-BASED COMPOSITIONS AND RELATED HYDROCARBON RECOVERY METHODS ~71:LIGNOSOL IP LIMITED, 4th Floor, Avantech Building, St Julian's Road, San Gwann SGN, 2805, Malta ~72: DESMOND ALEXANDER SOMERVILLE;PATRICK DIETER WAIBEL~ 33:GB ~31:2104860.8 ~32:06/04/2021;33:GB ~31:2115987.6 ~32:08/11/2021

2023/09376 ~ Complete ~54:PROCESS FOR PREPARING A SPRAY DRIED DETERGENT PARTICLE ~71:UNILEVER GLOBAL IP LIMITED, Port Sunlight, Wirral, Merseyside, CH62 4ZD, United Kingdom ~72: ABRAHAM CHACKO;GIRISH KUMAR;KUNAL SHANKAR PAWAR;NADEEM SHAIKH;SHARAVAN KUMAR~ 33:EP ~31:21174573.2 ~32:19/05/2021

2023/09377 ~ Provisional ~54:AN EMERGENGY STAT MOBILE MEDICAL LABORATORY ~71:MR TERAN NAIDOO, 251 ROAD 706 MONTFORD CHATSWORTH, South Africa ~72: MR TERAN NAIDOO~

2023/09338 ~ Complete ~54:CAM GROOVING MACHINE WITH CAM STOP SURFACES ~71:VICTAULIC COMPANY, 4901 Kesslersville Road, United States of America ~72: DOLE, Douglas R.~ 33:US ~31:15/585,457 ~32:03/05/2017

2023/09341 ~ Complete ~54:ELECTRONIC DEVICE INCLUDING ANTENNA AND HEAT DISSIPATION STRUCTURE ~71:SAMSUNG ELECTRONICS CO., LTD., 129, Samsung-ro, Yeongtong-gu, Suwon-si, Gyeonggi-do, 16677, Republic of Korea ~72: CHANGWON JANG;JONGPILL LEE;SEUNGHAN SEO~ 33:KR ~31:10-2019-0043503 ~32:15/04/2019

2023/09336 ~ Complete ~54:REFRESHMENT PAIRING KIT ~71:ASHLEIGH JOAN CADDICK, THE FARMYARD, PROTEA ROAD, South Africa ~72: ASHLEIGH JOAN CADDICK~ 33:ZA ~31:2022/11370 ~32:18/10/2022

2023/09339 ~ Complete ~54:LEAKAGE MONITORING METHOD AND SYSTEM FOR POWER CABLES OF SUBSTATIONS ~71:State Grid Nanjing Power Supply Company, No.1, Aoti street, Jianye District, Nanjing City, Jiangsu Province, People's Republic of China ~72: Chao XU;Hao CHEN;HaoYuan SHA;HongHua XU;QiLong QIAN;ShenZhe WANG;Tao TIAN;XiaoMing PAN~ 33:CN ~31:202211286907.X ~32:20/10/2022

2023/09758 ~ Complete ~54:CD71 BINDING FIBRONECTIN TYPE III DOMAINS ~71:Aro Biotherapeutics Company, 3675 Market Street, Suite 200, PHILADELPHIA 19104 , PA, USA, United States of America ~72: ADDIS, Russell C.;DRUZINA, Zhanna;KOLAKOWSKI, Robert V.;NADLER, Steven G.;O'NEIL, Karyn T.;XIN, Yao~ 33:US ~31:63/174,752 ~32:14/04/2021;33:US ~31:63/324,431 ~32:28/03/2022

2023/09759 ~ Complete ~54:COMBUSTION SYSTEM USING, AS AN OXIDISER, A MIXTURE OF MOLECULAR OXYGEN AND A DEHUMIDIFIED GAS OBTAINED FROM COMBUSTION FUMES ~71:Carbodown, 28 rue Henri Derain, NOMAIN 59310, FRANCE, France ~72: ZEMMOURI, Jaouad~ 33:FR ~31:2103568 ~32:07/04/2021

2023/09337 ~ Complete ~54:A NOVEL COMPOSITION FOR CORROSION CONTROL AND PROCESS THEREOFF ~71:Dr. Ambrish Singh, Department of Chemistry, Nagaland University, Lumami Headquarters, Zunheboto district, Nagaland, Nagaland, 798627, India;Dr. Yuanhua Lin, Shaanxi University of Herbal Medicine, the new district of Xian- Xianyang, Shaanxi, 712046, People's Republic of China;Mrs. Shivani Singh, Lovely Professional University, Jalandhar Delhi GT road, Phagwara, Punjab, 144411, India ~72: Dr. Ambrish Singh;Dr. Yuanhua Lin;Mrs. Shivani Singh~ 33:IN ~31:202331063421 ~32:21/09/2023

2023/09340 ~ Complete ~54:FILTER FOR INFUSION MEDICAL LINES ~71:Industrie Borla S.p.A., Via G. Di Vittorio, 7 bis, MONCALIERI (TORINO) I-10024, ITALY, Italy ~72: GUALA, Gianni~ 33:IT ~31:102022000020931 ~32:11/10/2022

2023/09334 ~ Provisional ~54:BEVERAGE CAN WITH RIBBED SIDES ~71:Martin Hempel, Endeavour Farm, South Africa ~72: Martin Hempel~

2023/09345 ~ Complete ~54:ONCOLOGIC VARIATIONS ASSOCIATED WITH CANCER AND METHODS OF TREATMENT ~71:LINNAEUS THERAPEUTICS, INC., 30 Washington Ave, Suite F, Haddonfield, United States of America ~72: GARYANTES, Tina;MOONEY, Patrick;NATALE, Christopher~ 33:US ~31:63/172,485 ~32:08/04/2021

2023/09348 ~ Complete ~54:GAS ATOMIZATION OF MOLTEN STEEL ~71:ARCELORMITTAL, 24-26, Boulevard d'Avranches, Luxembourg ~72: Alejandro CARO GUTIERREZ;Mathieu COUVRAT;Pallava KAUSHIK~

2023/09351 ~ Complete ~54:TETRACYCLIC COMPOUNDS FOR TREATING BRAIN DISORDERS ~71:THE REGENTS OF THE UNIVERSITY OF CALIFORNIA, 1111 Franklin Street, 12th Floor, United States of America ~72: DUNLAP, Lee;OLSON, David E.;TUCK, Jeremy R.~ 33:US ~31:63/174,266 ~32:13/04/2021

2023/09356 ~ Complete ~54:METHODS FOR TREATING CANCER WITH SUBCUTANEOUS ADMINISTRATION OF ANTI-PD1 ANTIBODIES ~71:Merck Sharp & Dohme LLC, 126 East Lincoln Avenue, RAHWAY 07065, NJ, USA, United States of America ~72: CHARTASH, Elliot Keith;DE MIRANDA SILVA, Carolina;GHEYAS, Ferdous;JAIN, Lokesh;KRISHNAMACHARI, Yogita;LALA, Mallika;VADDADY, Venkata Naga Ratna Pavan Kumar~ 33:US ~31:63/172,299 ~32:08/04/2021

2023/09360 ~ Complete ~54:IMPROVED METHODS & SYSTEMS FOR SIGNATURE VERIFICATION IN BLOCKCHAIN-IMPLEMENTED DATA APPLICATIONS ~71:nChain Licensing AG, Grafenauweg 6, ZUG 6300, SWITZERLAND, Switzerland ~72: DAVIES, Jack;WRIGHT, Craig Steven~ 33:GB ~31:2104312.0 ~32:26/03/2021

2023/09364 ~ Complete ~54:APPARATUS HAVING A GUIDE UNIT FOR GUIDING A CONVEYOR BELT ~71:ScrapeTec GmbH, Rheinberger Straße 157, KAMP-LINTFORT 47475, GERMANY, Germany ~72: DÜNNWALD, Wilfried;KOTH, Thorsten;PRENNER, Michael~ 33:DE ~31:10 2021 108 695.7 ~32:08/04/2021

2023/09370 ~ Complete ~54:LIGNIN-BASED COMPOSITIONS AND RELATED HYDROCARBON SEPARATION METHODS ~71:LIGNOSOL IP LIMITED, 4th Floor, Avantech Building, St Julian's Road, San Gwann SGN, 2805, Malta ~72: DESMOND ALEXANDER SOMERVILLE;PATRICK DIETER WAIBEL~ 33:GB ~31:2104865.7 ~32:06/04/2021;33:GB ~31:2115987.6 ~32:08/11/2021

. - APPLIED ON 2023/10/09 -

2023/09571 ~ Provisional ~54:EMERGENCY TRAFFIC SIGNALS ~71:Gilbert Davids, 57 Chatham road, South Africa ~72: Gilbert Davids~ 33:ZA ~31:08 ~32:08/10/2023

2023/09409 ~ Complete ~54:MINIATURE WIND POWER STORAGE DIRECT-CURRENT POWER SUPPLY SYSTEM AND APPARATUS ~71:HEBEI TANMI TECHNOLOGY CO., LTD., Room A-102, China (Tangshan) Industrial Museum, No.43, Longze South Road, Lubei District,, Tangshan, Hebei, 063000, People's Republic of China ~72: CHU, Cunhao;JIN, Lixin;XIANG, Junjie;YUAN, Xiaoxiang;YUAN, Yule~ 33:CN ~31:202211174693.7 ~32:26/09/2022

2023/09418 ~ Complete ~54:THERAPEUTIC BINDING MOLECULE THAT BINDS TO CCR9 ~71:MedImmune Limited, 1 Francis Crick Avenue, Cambridge Biomedical Campus, CAMBRIDGE CB2 0AA, UNITED KINGDOM, United Kingdom ~72: CARIUK, Peter;HUNTINGTON, Catherine Eugenie Chaillan;IRVING, Lorraine;NYS, Josquin Arnaud;REES, David Gareth;RILEY, Aidan;ROBINSON, Matthew;SCHOFIELD, Darren Jonathan;THOM, Albert George~ 33:US ~31:63/162,603 ~32:18/03/2021

2023/09528 ~ Provisional ~54:VIRTUAL ASSISTANT CHIEF OF STAFF SYSTEM FOR SEAMLESS MANAGEMENT OF LARGE AI TEAMS ~71:Defacto Consulting, 20950 Toad Street LionPride Lifestyle Estate, Nietgedacht, South Africa ~72: Emmanuel Lebaka~

2023/09380 ~ Complete ~54:PLASTIC FILM RESIDUE-FREE RECYCLING DEVICE ~71:Agriculture Resource and Environment Research Institute, Tibet Academy of Agriculture and Animal Science, Jinzhu West Road, Lhasa City, Tibet Autonomous Region, People's Republic of China ~72: ZHANG Huaguo~

2023/09382 ~ Complete ~54:ADAPTIVE THRESHOLD NEUTROSOPHIC SET ALGORITHM SUITABLE FOR THE VEHICLE BODY AND ITS ELECTRICAL FRAME ~71:Hunan University, College of Mechanical and Transport Engineering, No.1 South Lushan Road, Yuelu District, Changsha City, Hunan Province, 410082, People's Republic of China ~72: Zhaobin ZOU;Zhaohui HU~

2023/09384 ~ Complete ~54:ROBOT SYSTEM ASSISTING IN LOWER LIMB REHABILITATION ~71:Dongguan University of Technology, No. 1 Daxue Road, Songshan Lake District, Dongguan City, Guangdong Province, 523808, People's Republic of China ~72: CHEN, Huizhi;CHU, Hongpeng;ZENG, Daxing~ 33:CN ~31:2023110443024 ~32:18/08/2023

2023/09390 ~ Complete ~54:AGRICULTURAL BIG DATA SERVICE SYSTEM BUILT UPON INTERNET TECHNOLOGY ~71:My field (Hainan) Agricultural information Technology Co., LTD, 3305-1, Building 3, Yabulun Industrial Park, Yazhou Bay Science and Technology City, Yazhou District, Sanya City, Hainan Province, People's Republic of China ~72: Jinling Wu;Meng Ke~

2023/09392 ~ Complete ~54:SEED ADJUVANT AND PREPARATION METHOD AND APPLICATION THEREOF ~71:My field (Hainan) Agricultural information Technology Co., LTD, 3305-1, Building 3, Yabulun Industrial Park, Yazhou Bay Science and Technology City, Yazhou District, Sanya City, Hainan Province, People's Republic of China ~72: Jinling Wu;Meng Ke~

2023/09395 ~ Complete ~54:PHOSPHORUS AND FLUORINE FREE CLEANING AGENT FOR ALUMINUM ALLOY, CONCENTRATE THEREOF AND PREPARATION METHOD THEREOF ~71:CHINA ACADEMY OF MACHINERY WUHAN RESEARCH INSTITUTE OF MATERIALS PROTECTION CO., LTD., NO. 126 BAOFENG 2ND ROAD, People's Republic of China ~72: FENG, Zenghui;FU, Yu;LI, Dongdong;LIU, Lanxuan;LIU, Xiusheng;QIN, Weihua;WANG, Yang;WU, Dongheng;ZHANG, Dezhong;ZHAO, Tao~

2023/09397 ~ Complete ~54:TMPRSS6 IRNA COMPOSITIONS AND METHODS OF USE THEREOF ~71:ALNYLAM PHARMACEUTICALS, INC., 300 Third Street 3rd Floor, Cambridge, Massachusetts, 02142, United States of America ~72: BRIAN BETTENCOURT;JAMES BUTLER;KALLANTHOTTATHIL G RAJEEV;KLAUS CHARISSE;MARTIN MAIER~ 33:US ~31:61/826,178 ~32:22/05/2013;33:US ~31:61/912,988 ~32:06/12/2013

2023/09389 ~ Complete ~54:SMART GRID ENERGY STORAGE SYSTEM ~71:Urban Vocational College Of Sichuan, 351 Waidong Honghe Middle Road, Longquanyi District, Chengdu City, Sichuan Province, 610110, People's Republic of China ~72: CHEN Guo;LIN Lin;WANG Shunli~

2023/09408 ~ Complete ~54:PRODRUG OF CELECOXIB, PREPARATION METHOD THEREFOR AND APPLICATION THEREOF ~71:GUANGZHOU OCUSUN OPHTHALMIC BIOTECHNOLOGY CO., LTD., Room 402, No. 223 West Huanshi Road, Nansha District, Guangzhou, Guangdong, 511400, People's Republic of China ~72: LIU, Guoqiang;LIU, Wei;WANG, Yandong~ 33:CN ~31:202110276245.7 ~32:15/03/2021

2023/09410 ~ Complete ~54:PROCESS FOR COOLING AND TRANSPORTING METAL POWDER ~71:ARCELORMITTAL, 24-26, Boulevard d'Avranches, Luxembourg ~72: Benjamin BOISSIERE~ 33:IB ~31:PCT/IB2021/053521 ~32:28/04/2021

2023/09378 ~ Provisional ~54:PIZZA CONE MINI AIRFRYER TRAY ~71:Johannes L De Bruyn, 3 Beach Rd, South Africa ~72: Johannes L De Bruyn~

2023/09388 ~ Complete ~54:HIGH MOISTURE ENSILAGING METHOD FOR PENNISETUM ALOPECUROIDES ~71:Sichuan Academy of Animal Science, No.7 Niusha Road, Jinjiang District, Chengdu, People's Republic of China ~72: Changfeng WU;Liang ZHANG;Linxiang LI;Xiaoyu LIANG;Yanan LIU;Yang JI;Yuanbin HU;Zhixin YI~ 33:CN ~31:2023111017113 ~32:30/08/2023

2023/09396 ~ Complete ~54:METHOD AND SYSTEM FOR ASSESSING WATER ECOLOGICAL ENVIRONMENT QUALITY BASED ON FISH MONITORING ~71:CHINESE RESEARCH ACADEMY OF ENVIRONMENTAL SCIENCES, No.8, Dayangfang Beiyuan, People's Republic of China ~72: HE, Ping;HOU, Liping;REN, Ying;WANG, Dewang;XU, Jie~ 33:CN ~31:2022112277147 ~32:09/10/2022

2023/09398 ~ Complete ~54:BACKWARD-COMPATIBLE INTEGRATION OF HARMONIC TRANSPOSER FOR HIGH FREQUENCY RECONSTRUCTION OF AUDIO SIGNALS ~71:DOLBY INTERNATIONAL AB, Apollo Building, 3E Herikerbergweg 1-35, 1101 CN, Amsterdam Zuidoost, Netherlands ~72: HEIKO PURNHAGEN;LARS VILLEMOES;PER EKSTRAND~ 33:US ~31:62/475,619 ~32:23/03/2017

2023/09399 ~ Complete ~54:ANTI-TREM2 ANTIBODIES AND METHODS OF USE THEREOF ~71:ALECTOR LLC, 131 Oyster Point Boulevard, Suite 600, South San Francisco, California, 94080, United States of America ~72: ARNON ROSENTHAL;ERIC BROWN;ILARIA TASSI;NELS P NIELSON;PHILIP KONG;ROBERT PEJCHAL;SEUNG-JOO LEE;TINA SCHWABE~ 33:US ~31:62/541,019 ~32:03/08/2017;33:US ~31:62/636,095 ~32:27/02/2018

2023/09404 ~ Complete ~54:GRIP STRENGTH DETECTION GRASPING DEVICE AND A CONTROL METHOD THEREOF ~71:Xinjiang Medical University, No.567, Changde North Road, Shuimogou District, Urumqi, Xinjiang, 830017, People's Republic of China ~72: Hao Chenguang;Jiang Hong;Jiang Xiao'e;Yang Xinling;You Shuping;Zhang Shuqi;Zhang Yufeng;Zhao Yue;Zhou Jianmei~ 33:CN ~31:2023107198101 ~32:17/06/2023

2023/09420 ~ Complete ~54:ALPHA V BETA 6 AND ALPHA V BETA 1 INTEGRIN INHIBITORS AND USES THEREOF ~71:Dice Molecules SV, Inc., 400 East Jamie Court, Suite 300, SOUTH SAN FRANCISCO 94080, CA, USA, United States of America ~72: FATHEREE, Paul Ross;JACOBSEN, John R.;SHARMA, Lalit Kumar~ 33:US ~31:63/159,063 ~32:10/03/2021

2023/09429 ~ Complete ~54:METHOD AND SYSTEM FOR STEAMCRACKING ~71:LINDE GMBH, Dr.-Carl-von-Linde-Strasse 6-14, Germany ~72: BRUDER, David;HÖRENZ, Michael;HOFSTÄTTER, Martin;ZELLHUBER, Dr. Mathieu~ 33:EP ~31:21161780.8 ~32:10/03/2021

2023/09381 ~ Complete ~54:INTELLIGENT ASSEMBLY METHOD OF ELECTRONIC PARTS PRODUCTS BASED ON MACHINE VISION RECOGNITION ~71:Hunan University, College of Mechanical and Vehicle Engineering, Hunan University,Lushan Road (S), Yuelu District, Changsha City, Hunan Province, 410082, People's Republic of China ~72: Zhaohui HU~

2023/09383 ~ Complete ~54:METHOD FOR SIMULTANEOUSLY EXTRACTING ACTIVE MULTI-ENZYMES AND ORGANIC SELENIUM FROM ALOE ~71:LI, Changhong, No. 11, Lane 16, Guide South Road, Liangyuan District, Shangqiu City, Henan Province, 476000, People's Republic of China ~72: LI, Changhong;ZHOU, Yinfei~ 33:CN ~31:202211633029.4 ~32:19/12/2022

2023/09386 ~ Complete ~54:HIGH-STRENGTH FIBERGLASS WOVEN CLOTH AND PREPARATION METHOD THEREOF ~71:Jiangsu DR.GREEN Textile Co., LTD., North side of Guangdong Road, Economic Development Zone, Siyang County, Suqian City, Jiangsu Province, 223700, People's Republic of China ~72: LIU, Wei;QIN, Congcong;QIN, Zisheng;ZHANG, Shouyun~

2023/09413 ~ Complete ~54:COMBINATION THERAPIES USING PRMT5 INHIBITORS FOR THE TREATMENT OF CANCER ~71:MIRATI THERAPEUTICS, INC., 3545 Cray Court, San Diego, CA, United States of America ~72: CHRISTENSEN, James Gail;ENGSTROM, Lars Daniel;OLSON, Peter~ 33:US ~31:63/172,639 ~32:08/04/2021;33:US ~31:63/252,998 ~32:06/10/2021

2023/09424 ~ Complete ~54:ELECTROMECHANICAL LOCK ASSEMBLY ~71:SWEDLOCK AB, Korsvägen 31 302 56 Halmstad, Sweden ~72: JOHAN HÖRBERG;MAGNUS NILSSON;MARTIN LINDVALL~

2023/09428 ~ Complete ~54:COMPOUNDS FOR REGULATING TRAINED IMMUNITY, AND THEIR METHODS OF USE ~71:ICAHN SCHOOL OF MEDICINE AT MOUNT SINAI, One Gustave L. Levy Place, United States of America;TRAINED THERAPEUTIX DISCOVERY, INC., P.O. Box 224626, United States of America ~72: GENABEEK, Bas Van;HOEBEN, Freek Johannes Maria;JANSSEN, Henricus Marie;MULDER, Willem M.J.;SONTJENS, Serge Hendrikus Mathijs~ 33:US ~31:63/163,428 ~32:19/03/2021

2023/09385 ~ Complete ~54:FIBERGLASS BULKED FILTER CLOTH AND MANUFACTURING METHOD THEREOF ~71:Jiangsu DR.GREEN Textile Co., LTD., North side of Guangdong Road, Economic Development Zone, Siyang County, Suqian City, Jiangsu Province, 223700, People's Republic of China ~72: LIU, Wei;QIN, Congcong;QIN, Zisheng;ZHANG, Shouyun~

2023/09387 ~ Complete ~54:METHOD FOR ANALYZING TREE TAPER BASED ON CONSTRUCTION OF TREE GRADING STEM CURVE ~71:Research Institute of Forest Resource Information Techniques, Chinese Academy of Forestry, No.1, Dongxiaofu, Qinglongqiao Street, Xiangshan Road, Haidian District, Beijing, 100091, People's Republic of China ~72: FENG, Linyan;FU, Liyong;HUANG, Hongchao;PANG, Lifeng;XIE, Dongbo~

2023/09391 ~ Complete ~54:CROP GROWTH ENVIRONMENT BIG DATA ANALYSIS SYSTEM AND METHOD ~71:My field (Hainan) Agricultural information Technology Co., LTD, 3305-1, Building 3, Yabulun Industrial Park, Yazhou Bay Science and Technology City, Yazhou District, Sanya City, Hainan Province, People's Republic of China ~72: Jinling Wu;Meng Ke~

2023/09393 ~ Complete ~54:POTATO BREEDING SUBSTRATE AND PREPARATION METHOD THEREFOR ~71:ZHANGYE ACADEMY OF AGRICULTURAL SCIENCES, SEVEN KILOMETERS AWAY FROM ZHANGSU ROAD, People's Republic of China ~72: HE, Xinchun;YAN, Binjie;ZHAO, Limei~

2023/09394 ~ Complete ~54:SUGAR BEET AND PLANTING METHOD THEREOF ~71:ZHANGYE ACADEMY OF AGRICULTURAL SCIENCES, SEVEN KILOMETERS AWAY FROM ZHANGSU ROAD, People's Republic of China ~72: HE, Xinchun;YAN, Binjie;ZHAO, Limei~

2023/09400 ~ Complete ~54:HYDROGEN PEROXIDE SOLUTION-PREFILLED SYRINGE HAVING EXCELLENT HYDROGEN PEROXIDE PRESERVABILITY BY VIRTUE OF SILICONE OIL (OIL COMPOSITION CONTAINING SAID SILICONE OIL) ~71:KORTUC INC., Shiroyama Trust Tower, 4F, 4-3-1 Toranomon, Minato-ku , Tokyo,

1056004, Japan ~72: SHOGO YAMASHITA~ 33:JP ~31:2019-068797 ~32:29/03/2019;33:JP ~31:2019-078110 ~32:16/04/2019;33:JP ~31:2019-107223 ~32:07/06/2019;33:JP ~31:2019-107227 ~32:07/06/2019

2023/09402 ~ Complete ~54:ELECTRICAL LOAD SHEDDING PROTECTION SYSTEM ~71:NARAINSAMY, Ashley Clifford, 4 Grand Floridian, 3 Utshani Close, La Lucia, South Africa ~72: NARAINSAMY, Ashley Clifford~ 33:ZA ~31:2022/03944 ~32:07/10/2022

2023/09414 ~ Complete ~54:COMBINATION THERAPIES USING PRMT5 INHIBITORS FOR THE TREATMENT OF CANCER ~71:MIRATI THERAPEUTICS, INC., 3545 Cray Court, San Diego, CA, United States of America ~72: CHRISTENSEN, James Gail;ENGSTROM, Lars Daniel;OLSON, Peter~ 33:US ~31:63/172,643 ~32:08/04/2021;33:US ~31:63/253,029 ~32:06/10/2021

2023/09421 ~ Complete ~54:PKC-THETA MODULATORS ~71:Exscientia AI Limited, The Schrödinger Building, Oxford Science Park, OXFORD OX4 4GE, UNITED KINGDOM, United Kingdom ~72: BESNARD, Jeremy;BRADLEY, Anthony;MENEYROL, Jérôme;RAY, Peter;RICHARDS, Simon;SANTOS, Catarina;SUCHAUD, Virginie~ 33:GB ~31:2106486.0 ~32:06/05/2021

2023/09425 ~ Complete ~54:COMPOSITIONS AND METHODS FOR TREATING HYPERCHOLESTEROLEMIA ~71:EMENDOBIO INC., 1013 Centre Road, Suite 403-b Wilmington, Delaware 19805, United States of America ~72: JOSEPH DICKEN;MICHAL GOLAN MASHIACH;RAFI EMMANUEL~ 33:US ~31:63/164,396 ~32:22/03/2021;33:US ~31:63/304,170 ~32:28/01/2022

2023/09430 ~ Complete ~54:IMMUNOMODULATORY MOLECULES AND USES THEREOF ~71:IMMUNOWAKE INC., 1500 1st Avenue North, L109, Unit 33, Birmingham, United States of America ~72: WAKEFIELD, John;WU, Ellen;WU, Xiaoyun~ 33:US ~31:63/159,441 ~32:10/03/2021;33:US ~31:PCT/US2021/073107 ~32:23/12/2021

2023/09401 ~ Complete ~54:CUP ARRANGEMENT ~71:MINNAAR, Philip, 28 Earls Way, HERITAGE PARK, Cape Town 7130, Western Cape, SOUTH AFRICA, South Africa;WESTCOTT, Dale Howard, 24 Herald Drive, Umhlanga Rocks, DURBAN 4319, Kwa-Zulu Natal, SOUTH AFRICA, South Africa ~72: MINNAAR, Philip;WESTCOTT, Dale Howard~ 33:ZA ~31:2022/06136 ~32:03/10/2022

2023/09403 ~ Complete ~54:NON-FM TO FM RF SIGNAL CONVERTER ~71:NARAINSAMY, Ashley Clifford, 4 Grand Floridian, 3 Utshani Close, La Lucia, South Africa ~72: NARAINSAMY, Ashley Clifford~ 33:ZA ~31:2022/03943 ~32:07/10/2022

2023/09411 ~ Complete ~54:MASKED ACTIVATABLE CYTOKINE CONSTRUCTS AND RELATED COMPOSITIONS AND METHODS ~71:CYTOMX THERAPEUTICS, INC., 151 OYSTER POINT BOULEVARD, SUITE 400, SOUTH SAN FRANCISCO, CALIFORNIA 94080, USA, United States of America ~72: ASSI, Hikmat, Haizar;BEREZHNOY, Alexey, Yevgenyevich;BOGDANOFF, Walter, A.;CAI, Na;DANIEL, Dylan, L.;LAPUYADE, Nicole, G.;LE SCOLAN, Erwan;MITRA, Sayantan;PAIDHUNGAT, Madan, M.;WANG, Hsin~ 33:US ~31:63/161,913 ~32:16/03/2021;33:US ~31:63/164,827 ~32:23/03/2021;33:US ~31:63/254,748 ~32:12/10/2021;33:US ~31:63/276,893 ~32:08/11/2021

2023/09417 ~ Complete ~54:A METHOD AND COMPUTER SYSTEM FOR MANAGING PATIENT CONSULTATIONS ~71:SCANMED HEALTH PROPRIETARY LIMITED, 14 Stauch Street, Klein Windhoek, Windhoek, NAMIBIA, Namibia ~72: MURPHY, Patrick~ 33:ZA ~31:2021/05492 ~32:03/08/2021

2023/09379 ~ Complete ~54:METHOD FOR CULTURING ZONA-FREE CLONED EMBRYOS ~71:Institute of Animal Husbandry , Henan Academy of Agricultural Sciences, NO.116,Huayuan Road, Jinshui District, Zhengzhou city, Henan Province, People's Republic of China ~72: LIU Hongbo;LU Qingxia;LV Lingyan;REN Qiaoling;SHEN Ming;WANG Xianwei;XING Baosong;YAN Xiangzhou;ZHANG Jiaqing~

2023/09415 ~ Complete ~54:CD8-SPECIFIC ANTIBODY CONSTRUCTS AND COMPOSITIONS THEREOF ~71:SANA BIOTECHNOLOGY, INC., 188 East Blaine Street, Suite 400, United States of America ~72: AMATYA, Shirisha;CRUITE, Patricia;HARDING, Hugh;MACKENZIE, Lauren~ 33:US ~31:63/172,518 ~32:08/04/2021;33:US ~31:63/299,254 ~32:13/01/2022

2023/09419 ~ Complete ~54:A COMPONENT FOR SUPPORTING A WIND TURBINE AND A METHOD FOR MANUFACTURING THE COMPONENT ~71:PowerTower AB, Katrinelund 459F, STORA MELLÖSA SE-715 92, SWEDEN, Sweden ~72: JONSSON, Fredrik~ 33:SE ~31:2150517-7 ~32:23/04/2021

2023/09406 ~ Complete ~54:AUTOMATIC CONTROL DEVICE FOR CAR LAMPS ~71:Xinyu University, 2666 Sunshine Avenue, High tech Development Zone, Xinyu City, Jiangxi Province, 338004, People's Republic of China ~72: Hong Yun;Hu Shaozhong~ 33:CN ~31:2023111722674 ~32:12/09/2023

2023/09412 ~ Complete ~54:ISOINDOLINONE COMPOUNDS AND IMAGING AGENTS FOR IMAGING HUNTINGTIN PROTEIN ~71:CHDI FOUNDATION, INC., c/o CHDI Management, Inc., 350 Seventh Avenue, United States of America ~72: BARD, Jonathan;BROWN, Christopher John;CHEN, Xuemei;CLARK-FREW, Daniel;DOMINGUEZ, Celia;GADOULEAU, Elise;JOHNSON, Peter David;LIU, Longbin;MILLS, Matthew Robert~ 33:US ~31:63/172,617 ~32:08/04/2021

2023/09416 ~ Complete ~54:ANTIVIRUS PROTEINS HAVING A KRINGLE 5 SUBUNIT ~71:Creative Biotherapeutics, LLC, 200 S Greenleaf Street, Suite J, Gurnee, United States of America ~72: Donald DAVIDSON~ 33:US ~31:17/235,652 ~32:20/04/2021

2023/09423 ~ Complete ~54:NAKED COLLATION PACKAGE FILM ~71:INNOVIA FILMS LTD, Station Road, United Kingdom ~72: LEWUCHA, Cezary;SINGH, Shalendra~ 33:GB ~31:2105310.3 ~32:14/04/2021;33:GB ~31:2111513.4 ~32:11/08/2021

2023/09426 ~ Complete ~54:TREATMENT OF ESSENTIAL TREMOR ~71:SAGE THERAPEUTICS, INC., 215 First Street, Cambridge, Massachusetts, 02142, United States of America ~72: ADI ELDAR-LISSAI;HELEN ANNE COLQUHOUN;JEFFREY A WALD;MARGARET ELIZABETH GERBASI;OLUWAKEMI BANKOLE~ 33:US ~31:63/173,867 ~32:12/04/2021

2023/09405 ~ Complete ~54:METHOD FOR IN-SITU REMEDIATION OF HEAVY METAL-CONTAMINATED SOIL BY CROP INTERPLANTING ~71:HUNAN VEGETABLE RESEARCH INSTITUTE(HVRI), No. 892 Yuanda Second Road, Furong District, Changsha City,Hunan Province, 410000, People's Republic of China ~72: Li Jie;Li Xuefeng;Luo Meng;Xu Wuyi;Zheng Jingyuan;Zhou Shudong;Zhu Chunhui~ 33:CN ~31:202211272228.7 ~32:18/10/2022

2023/09407 ~ Complete ~54:ELECTRICAL MACHINE CONTROL SYSTEM BASED ON WIRELESS REMOTE CONTROL ~71:Baicheng Normal University, No. 57 Zhongxing West Road, Baicheng City, Jilin Province, 137000, People's Republic of China ~72: Gu Lijun;Li Bing;Liu Yingxuan;Tang Wanru;Zhao Haipeng;Zhao Qiang~

2023/09422 ~ Complete ~54:METHOD AND SYSTEM FOR CONTROLLING A POSITION AND/OR AN ORIENTATION OF AN ELONGATED STRUCTURE ~71:Delta Laboratories Holding B.V., Scheepsbouwweg 8 G2, Haven 2600, ROTTERDAM 3089 , JW, THE NETHERLANDS, Netherlands ~72: LOPES, Gabriel;OOSTERLOO, Dabian;SCHIELE, DHR., André~ 33:NL ~31:2027739 ~32:10/03/2021

2023/09427 ~ Complete ~54:METHOD, DEVICE AND COMPUTER PROGRAM PRODUCT FOR WIRELESS COMMUNICATION ~71:ZTE CORPORATION, ZTE Plaza Keji Road South Hi-Tech Industrial Park Nanshan Shenzhen, Guangdong, 518057, People's Republic of China ~72: BOSHAN ZHANG;CHEN LU;DONGMEI LI;HONGJUN LIU;WEI MA;WU WEN;ZIJIANG MA~

. - APPLIED ON 2023/10/10 -

2023/09457 ~ Complete ~54:WASTE DRYING ~71:RWE GENERATION NL B.V., Amerweg 1, 4931, NC Geertruidenberg, Netherlands ~72: CARLO JACOBUS JOHANNES MARIA DE BEST;JOHANNES THEODORUS GERARDUS MARIE EURLINGS~ 33:EP ~31:21183993.1 ~32:06/07/2021

2023/09459 ~ Complete ~54:DEVICE FOR HOLDING UP UTENSILS FOR DAILY USE ~71:GÖTZE, Joan, Werneckestrasse 28, 37603, Holzminden, Germany ~72: GÖTZE, Joan~

2023/09462 ~ Complete ~54:CRYSTAL FORM OF PYRIDINE NITROGEN OXIDE COMPOUND AND USE THEREOF ~71:Jiangxi Jemincare Group Co., Ltd, No. 3333, Yaohu North Avenue, High-tech Industries Development Zone, NANCHANG 330000, JIANGXI, CHINA (P.R.C.), People's Republic of China;Shanghai Jemincare Pharmaceutical Co., Ltd, 1st Floor, Block 1, No. 1118 Halei Road, Pilot Free Trade Zone, Pudong New Area, SHANGHAI 201203, CHINA (P.R.C.), People's Republic of China ~72: CAO, Cheng;CHENG, Hongming;PENG, Jianbiao;WAN, Qingwei;ZHANG, Yong~ 33:CN ~31:202110265997.3 ~32:11/03/2021;33:CN ~31:202210195905.3 ~32:01/03/2022

2023/09450 ~ Complete ~54:WHEEL CARRIER ~71:MILES, Shane Robert, 43 Harrington Street, Arundel, Australia ~72: MILES, Shane Robert~ 33:AU ~31:20219000683 ~32:10/03/2021;33:AU ~31:2021901262 ~32:29/04/2021

2023/09453 ~ Complete ~54:PROCESSING SYSTEMS AND METHODS FOR STEEL-MAKING CO-PRODUCTS ~71:PHOENIX SERVICES LLC, 4 Radnor Corporate Center, United States of America ~72: OSBORNE, Bryan~ 33:US ~31:17/199,038 ~32:11/03/2021

2023/09455 ~ Complete ~54:ELECTRONIC APPARATUS FOR STABLE ELECTRICAL CONNECTION ~71:SAMSUNG ELECTRONICS CO., LTD., 129, Samsung-ro, Yeongtong-gu, Suwon-si, Gyeonggi-do, 16677, Republic of Korea ~72: DUHO CHU;MYEONGSU OH;YONGYOUN KIM;YOUNGJUNE HONG~ 33:KR ~31:10-2021-0046941 ~32:12/04/2021

2023/09456 ~ Complete ~54:COMPOSITION COMPRISING AN IGE ANTIBODY ~71:KING'S COLLEGE LONDON, Strand, London, England, WC2R 2LS, United Kingdom ~72: JAMES SPICER;SOPHIA KARAGIANNIS~ 33:EP ~31:PCT/EP2021/060749 ~32:23/04/2021;33:GB ~31:2109550.0 ~32:01/07/2021

2023/09458 ~ Complete ~54:COMPOUNDS, COMPOSITIONS AND METHODS OF TREATING CANCER ~71:HOTSPOT THERAPEUTICS, INC., 50 Milk Street, 16th Floor Boston, Massachusetts 02109, United States of America ~72: DAVID J DILLER;GERALDINE CIRILLO HARRIMAN;GRAHAM A.B HONE;KEN CARSON;RAJIAH ALDRIN DENNY;RAJIV GANDHI GOVINDARAJ;YINGZHI BI~ 33:US ~31:63/175,974 ~32:16/04/2021;33:US ~31:63/281,493 ~32:19/11/2021

2023/09435 ~ Provisional ~54:SYSTEM AND METHOD FOR GBV ADVANCED TRACK & MONITOR (CURFEW) FEATURE ~71:Bongani Mzobe, 653 Mangwele Street, Chiawelo Ext 3, Soweto, South Africa ~72: Bongani Mzobe~

2023/09438 ~ Provisional ~54:DRYING RACK ~71:NEL, Adriaan, 26 YSTERHOUT AVENUE, BARDENE, South Africa ~72: NEL, Adriaan~

2023/09461 ~ Complete ~54:MATRIX STRUCTURE FOR A LAUNDRY DETERGENT COMPOSITION, LAUNDRY DETERGENT SOLID COMPOSITION, PROCESS TO PRODUCE A SOLID LAUNDRY DETERGENT COMPOSITION, UNIT DOSAGE DETERGENT FORM, USE OF MICROFIBRILLATED CELLULOSE ~71:Suzano S.A., Avenida Professor Magalhães Neto, nº 1.752, 10º andar, salas 1010 e 1011, PITUBA

41810-012 , SALVADOR - BA, BRAZIL, Brazil ~72: GUIMARÃES, Matheus Antunes;SPADAFORA, Bruna Papa;VIEIRA, Richieli Teles~ 33:US ~31:63/159,860 ~32:11/03/2021

2023/09466 ~ Complete ~54:PREPARATION METHOD OF IONIC RARE EARTH LEACHING AGENT ~71:CHINA TIN GROUP CO., LTD., No. 9, Guizhong Avenue, Chengzhong District, Liuzhou, People's Republic of China;CHINA TIN NONFERROUS METALS CO., LTD., 9th Floor, Block B, Beibu Gulf Shipping Center, No.12 Tiqiang Road, Liangqing District, Nanning, People's Republic of China ~72: HU, Mingzhen;LIN, Chengxu;QIN, Zuoming;TAN, Zongyong;TANG, Xiangjun;WANG, Lili;ZHAO, Mingyong~ 33:CN ~31:202211242468.2 ~32:11/10/2022;33:CN ~31:202310367797.8 ~32:07/04/2023;33:CN ~31:202310367804.4 ~32:07/04/2023

2023/09529 ~ Provisional ~54:WHACK HACK- STUDY APP ~71:LUNGELO, 136 PLEIN STREET, South Africa ~72: LUNGELO~

2023/09447 ~ Complete ~54:SYSTEMS AND METHODS FOR REHABILITATING COFFEE BEANS AND BREWED COFFEE ~71:Trade Secret Chocolates, 4749 Pennington Court, INDIANAPOLIS 46254, IN, USA, United States of America ~72: RUBIN, Matthew~ 33:US ~31:16/939,340 ~32:27/07/2020;33:US ~31:63/093,045 ~32:16/10/2020;33:US ~31:63/156,517 ~32:04/03/2021;33:US ~31:63/156,588 ~32:04/03/2021;33:US ~31:63/209,487 ~32:11/06/2021

2023/09452 ~ Complete ~54:STEEL SHEET AND HIGH STRENGTH PRESS HARDENED STEEL PART AND METHOD OF MANUFACTURING THE SAME ~71:ARCELORMITTAL, 24-26, Boulevard d'Avranches, Luxembourg ~72: Emmanuel LUCAS;François STOUVENOT;Sebastian COBO~ 33:IB ~31:PCT/IB2021/053725 ~32:04/05/2021

2023/09433 ~ Provisional ~54:SYSTEM AND METHOD FOR PREDICTIVE CRIME PREVENTION FEATURE ~71:Bongani Mzobe, 653 Mangwele Street, Chiawelo Ext 3, Soweto, South Africa ~72: Bongani Mzobe~

2023/09439 ~ Provisional ~54:ROCK ANCHOR TESTING ~71:BADGER EQUIPMENT (PTY) LTD, 77 Wattle Road, Benoni AH, South Africa ~72: GRIX, Etienne Douglas Lennox~

2023/09442 ~ Complete ~54:SEEDLING SUBSTRATE FOR GRAFTING CHERRY TOMATOES AND PREPARATION METHOD THEREOF ~71:INSTITUTE OF VEGETABLE, HAINAN ACADEMY OF AGRICULTURAL SCIENCES, No.14 Xingdan lu, Qiongshan District Haikou City, Hainan Province, 571100, People's Republic of China ~72: GAO, Fanghua;LI, Xuejiao;WANG, Xiaojuan;WU, Yueyan;WU, Zhuangsheng~

2023/09443 ~ Complete ~54:DEVICE AND METHOD FOR CAPTURING CARBON DIOXIDE IN METHANOL-TO-OLEFINS (MTO) REGENERATED FLUE GAS ~71:CHINA CONSTRUCTION INDUSTRIAL & ENERGY ENGINEERING GROUP CO. , LTD., No.6 Wenlan Road, Qixia District, Nanjing, Jiangsu, 210000, People's Republic of China ~72: Changhai YUE;Hui YE;Jingjing HUANG;Junzhou LI;Mingwei TANG;Qiang SHI;Yiping HUANG;Yunfang LIU;Yunguo HUANG;Zhenhao WEI~ 33:CN ~31:202211431958.7 ~32:16/11/2022

2023/09444 ~ Complete ~54:METHOD FOR IMPROVING THE STABILITY OF COTTON CARBON FIBER CATALYSTS ~71:Hainan Tropical Ocean University, No.1 Yucai Road, Jiyang District, Sanya City, Hainan Province, People's Republic of China;Yazhou Bay Innovation Institute of Hainan Tropical Ocean University, Yazhou Bay Science and Technology City, Sanya City, Hainan Province, People's Republic of China ~72: BAI Shiwei;CHEN Qingrong;GUO Yaxu;LI Yu;LIN Wenqiang;SHI Yaqin;WAN Wubo;WANG Yingfei;WEI Weijie;YANG Chun~

2023/09446 ~ Complete ~54:RAPAMYCIN ANALOGS AND USES THEREOF ~71:Janssen Pharmaceutica NV, Turnhoutseweg 30, Beerse, 2340, BELGIUM, Belgium ~72: KANG, Seong Woo Anthony;O'NEILL, David John;SAIAH, Eddine~ 33:US ~31:62/685,666 ~32:15/06/2018

2023/09454 ~ Complete ~54:VISHING DEFENCE METHOD AND SYSTEM ~71:PAMA, Thandisizwe Ezwenilethu, 137 Villefranche, Sunset Boulevard, Lonehill, South Africa ~72: PAMA, Thandisizwe Ezwenilethu~ 33:ZA ~31:2021/01642 ~32:11/03/2021

2023/09467 ~ Complete ~54:METHOD FOR PREPARING THE IN2SE3 NANOMATERIALS FOR PHOTOCATALYTIC DEGRADATION OF TETRACYCLINE ~71:CHINA TIN GROUP CO., LTD., No. 9, Guizhong Avenue, Chengzhong District, Liuzhou, People's Republic of China;CHINA TIN NONFERROUS METALS CO., LTD., 9th Floor, Block B, Beibu Gulf Shipping Center, No.12 Tiqiang Road, Liangqing District, Nanning, People's Republic of China ~72: HU, Mingzhen;NONG, Yongping;TAN, Zongyong;ZHOU, Deyan~ 33:CN ~31:202211242468.2 ~32:11/10/2022;33:CN ~31:202310367797.8 ~32:07/04/2023;33:CN ~31:202310367804.4 ~32:07/04/2023

2023/09468 ~ Complete ~54:METHOD FOR PREPARING SHEET TIN DISULFIDE NANOMATERIAL FOR EFFICIENT ADSORPTION OF ORGANIC DYES ~71:CHINA TIN GROUP CO., LTD., No. 9, Guizhong Avenue, Chengzhong District, Liuzhou, People's Republic of China;CHINA TIN NONFERROUS METALS CO., LTD., 9th Floor, Block B, Beibu Gulf Shipping Center, No.12 Tiqiang Road, Liangqing District, Nanning, People's Republic of China ~72: HU, Mingzhen;NONG, Yongping;WANG, Lili;ZHOU, Deyan~ 33:CN ~31:202211242468.2 ~32:11/10/2022;33:CN ~31:202310367797.8 ~32:07/04/2023;33:CN ~31:202310367804.4 ~32:07/04/2023

2023/09441 ~ Provisional ~54:PULL STRAP - CONVEYOR AND OTHER ~71:Martin, 48 Cachet road , Lambton , Germiston , 1401, South Africa ~72: Martin Barnard~

2023/09445 ~ Complete ~54:A MOLYBDENUM DIPHOSPHIDE-CARBON NANOTUBE COMPOSITE MATERIAL AND ITS PREPARATION METHOD ~71:East China Jiaotong University, No. 808, Shuanggang East Street, Jingkai District, Nanchang, Jiangxi, 330013, People's Republic of China ~72: Chan KE;Haoran LIU;Shanchuan CUI;Yi LUO;Zhimin LIU;Ziqiang CHENG~ 33:CN ~31:2022117323438 ~32:30/12/2022

2023/09449 ~ Complete ~54:MICRO BUBBLE GENERATION METHOD AND GENERATION DEVICE ~71:MA, Minxiong, 502, Unit 1, No.8 Yuanyang Wanhe Mansion, Wangjing Street, People's Republic of China ~72: MA, Minxiong~ 33:CN ~31:202110406058.6 ~32:15/04/2021

2023/09460 ~ Complete ~54:PROCESS AND SYSTEM FOR PRODUCING A PRODUCT HYDROCARBON ~71:LINDE GMBH, Dr.-Carl-von-Linde-Strasse 6-14, Germany ~72: MEISWINKEL, Andreas;SCHUBERT, Martin;WÖHL, Anina;ZELLHUBER, Mathieu~ 33:EP ~31:21162664.3 ~32:15/03/2021

2023/09437 ~ Provisional ~54:SYSTEM AND METHOD FOR SIDEBAR/MAPVIEW/APPVIEW/WEBVIEW FEATURES (GENDER-FENCING AND AREA CRIME SCORE) ~71:Bongani Mzobe, 653 Mangwele Street, Chiawelo Ext 3, Soweto, South Africa ~72: Bongani Mzobe~

2023/09432 ~ Provisional ~54:AN ACID MIST REDUCTION DEVICE ~71:PROTHERO, Gareth Clive, 189 Hangklip Road, Pringle Bay, Western Cape, South Africa;VAN DIEMAN, Eric, 74 Landau Street, Morehill, Benoni, Guateng, South Africa ~72: PROTHERO, Gareth Clive~

2023/09434 ~ Provisional ~54:SYSTEM AND METHOD FOR SAFE-ROUTE SEARCH FEATURE ~71:Bongani Mzobe, 653 Mangwele Street, Chiawelo Ext 3, Soweto, South Africa ~72: Bongani Mzobe~

2023/09436 ~ Provisional ~54:SYSTEM AND METHOD FOR DAYTIME TRACK & MONITOR (NON-CURFEW HOURS) FEATURE ~71:Bongani Mzobe, 653 Mangwele Street, Chiawelo Ext 3, Soweto, South Africa ~72: Bongani Mzobe~

2023/09440 ~ Provisional ~54:BEVERAGE CAN WITH CYLINDRICAL TOP AND CONICAL BOTTOM BODY PORTIONS ~71:Martin Hempel, 138 Villiers Road, Walmer, South Africa ~72: Martin Hempel~

2023/09448 ~ Complete ~54:DYNAMICALLY FORECASTING HIGH RESOLUTION AIR TEMPERATURE IN REAL-TIME USING MULTIPLE SOURCES ~71:International Business Machines Corporation, New Orchard Road, ARMONK 10504, NY, USA, United States of America ~72: AKHALWAYA, Ismail Yunus;BHAMJEE, Muaaz;GOVINDASAMY, Tamara Rosemary;MAHLASI, Craig;MAKHANYA, Sibusisiwe Audrey;MORAKE, Dedricks Monyai;PATEL, Zubeida;VOS, Etienne Eben~ 33:US ~31:18/200,050 ~32:22/05/2023

2023/09451 ~ Complete ~54:STEEL SHEET AND HIGH STRENGTH PRESS HARDENED STEEL PART AND METHOD OF MANUFACTURING THE SAME ~71:ARCELORMITTAL, 24-26, Boulevard d'Avranches, Luxembourg ~72: Emmanuel LUCAS;François STOUVENOT;Sebastian COBO~ 33:IB ~31:PCT/IB2021/053731 ~32:04/05/2021

2023/09463 ~ Complete ~54:FORMULATIONS OF APREMILAST ~71:Amgen Inc., One Amgen Center Drive, THOUSAND OAKS 91320-1799, CA, USA, United States of America ~72: BENNETTE, Nathan;CALDWELL, William Brett;HOSTETLER, Christi;INGRAM, Kazden;KING, Dory;KYBURZ, Kyle;VILES, Alison~ 33:US ~31:63/194,247 ~32:28/05/2021

2023/09464 ~ Complete ~54:VIRAL VECTORS FOR CANCER THERAPY ~71:Krystal Biotech, Inc., 2100 Wharton Street, Suite 701, PITTSBURGH 15203, PA, USA, United States of America ~72: DUERMEYER, Mary Jane;KRISHNAN, Suma;PARRY, Trevor;PREVITE, Dana Michelle~ 33:US ~31:63/170,103 ~32:02/04/2021

2023/09465 ~ Complete ~54:METHOD OF EXTRACTING MYRICETIN FROM XANTHOCERAS SORBIFOLIA BUNGE ~71:HEBEI RUILONG BIOTECHNOLOGY CO., LTD, East of Qinling Street, South of Chongjiang Road, North of Guoyi City, High-tech Zone, Shijiazhuang, People's Republic of China ~72: LI, Weijia;WANG, Junhua;YAN, Jingyi;ZHENG, Jingmei~ 33:CN ~31:202211054260.8 ~32:31/08/2022

2023/09469 ~ Provisional ~54:GYTNY TAXI APPLICATION ~71:BORNWELL KANDIERO, 12 Fitzpatrick,, South Africa ~72: BORNWELL KANDIERO~

. - APPLIED ON 2023/10/11 -

2023/09511 ~ Complete ~54:GENE THERAPY FOR ARRHYTHMOGENIC RIGHT VENTRICULAR CARDIOMYOPATHY ~71:The Regents of the University of California, 1111 North Franklin Street, 5th Floor, OAKLAND 94607-5200, CA, USA, United States of America ~72: BRADFORD, William;SHEIKH, Farah~ 33:US ~31:63/173,527 ~32:12/04/2021

2023/09512 ~ Complete ~54:WEAR ASSEMBLY ~71:ESCO Group LLC, 2141 NW 25th Avenue, PORTLAND 97210-2578, OR, USA, United States of America ~72: BINGHAM, Bruce Christopher;ENGLEN, Zachary R.;HANKLAND, Joel S.;JOHNSTON, Christopher A.;OLLINGER IV, Charles G.;STANGELAND, Kevin S.;ZENIER, Scott H.~ 33:US ~31:63/173,939 ~32:12/04/2021

2023/09518 ~ Complete ~54:WATER TREATMENT FACILITY AND METHOD ~71:Suez International, 16 Place de l'Iris, Tour CB21, PARIS 92040, LA DEFENSE CEDEX, FRANCE, France ~72: BARBÉ, Caroline;PASTORELLI, Delia~ 33:FR ~31:FR2103759 ~32:12/04/2021

2023/09521 ~ Complete ~54:BLOCKCHAIN MICRO TRANSACTIONS ~71:DABCO LIMITED, Vodafone House, The Connection, United Kingdom ~72: BENTO, Jorge;PALMER, David;POSCHKE, Nils~ 33:GB ~31:2105100.8 ~32:09/04/2021

2023/09526 ~ Complete ~54:A MULTI-UTILITARIAN IMPLEMENT SUITABLE FOR USE ON THE DINING TABLE ~71:BALA INDUSTRIES AND ENTERTAINMENT PRIVATE LIMITED, S. No. 114/A2, Venkateshwara House, Pune-Sinhagad Road, India ~72: BEIGH; Mirza Mohammad Idrees Ul Haq~ 33:IN ~31:202121011953 ~32:20/03/2021

2023/09473 ~ Provisional ~54:WASTE SEPARATOR MODULE WITH ADAPTIVE BAG INSTALLATION APPARATUS ~71:Theo Arthur, 27 Karee Street, South Africa ~72: Theo Arthur~

2023/09475 ~ Complete ~54:CONSTITUTION MULTI-LABEL CLASSIFICATION METHOD, DEVICE AND MEDIUM ~71:WUYI UNIVERSITY, No. 22, Dongcheng, Pengjiang, Jiangmen, People's Republic of China ~72: CHEN, Tao;FENG, Yue;LIN, Zhuosheng;LIU, Qichao;MA, Yuangang;WU, Xin;XU, Hong~ 33:CN ~31:202310974739.1 ~32:03/08/2023

2023/09479 ~ Complete ~54:MULTIVARIABLE CONTROL METHOD FOR PREVENTING FLUCTUATIONS IN PRE-DRYING AND ABSORPTION OF FLUE GAS ACID-MAKING ~71:Yimen Copper Co., Ltd., Dachunshu, Yimen County, Yuxi City, Yunnan Province, People's Republic of China ~72: Chengzhou LI;Fuquan LI;Jiarong XIE;Jiayi YANG;Peng JI;Tifu ZHANG;Wanyong ZHANG;Zhonglin YE~ 33:CN ~31:202211262022.6 ~32:14/10/2022

2023/09483 ~ Complete ~54:APPARATUS AND METHOD FOR PROCESSING IRON ORE ~71:Fortescue Metals Group Ltd, Level 2 87 Adelaide Terrace, EAST PERTH 6004, WESTERN AUSTRALIA, AUSTRALIA, Australia ~72: HARRIS, Warren;JOLLEY, Daniel~ 33:AU ~31:2018904512 ~32:27/11/2018

2023/09491 ~ Complete ~54:ASEPTIC CONNECTOR FOR FLUID CONDUITS ~71:SUNFLOWER THERAPEUTICS, PBC, 18 SHIPYARD DRIVE, SUITE 2A, HINGHAM, MASSACHUSETTS 02043, USA, United States of America ~72: AL-SHAMSIE, Ziad;BONNYMAN, Alexandra;GOLDBLATT, Alex;KAHATT, Espir;LOVE, John, Christopher;LOVE, Kerry, R.;REISMAN, Ben;WEINER, Larry~ 33:US ~31:63/163,167 ~32:19/03/2021

2023/09500 ~ Complete ~54:NEW STABLE ANTI-VISTA ANTIBODY ~71:PIERRE FABRE MEDICAMENT, Les Cauquillous, France ~72: BECK, Alain~ 33:US ~31:63/182,316 ~32:30/04/2021

2023/09501 ~ Complete ~54:A DOWNHOLE ASSEMBLY WITH PNEUMATIC ISOLATION ~71:VECTOR MAGNETICS LLC, 236 Cherry Street, United States of America ~72: KUCKES, Arthur F;THOMPSON, Morgan~

2023/09503 ~ Complete ~54:INHIBITORS OF GLYCOGEN SYNTHASE 1 (GYS1) AND METHODS OF USE THEREOF ~71:MAZE THERAPEUTICS, INC., 171 Oyster Point Blvd, Suite 300, South San Francisco, California, 94080, United States of America ~72: CHRISTOPHER JOSEPH SINZ;DAVID JOHN MORGANS JR.;HANNAH L POWERS;KEVIN MELLEM;PATRICK SANG TAE LEE;WALTER WON~ 33:US ~31:63/161,347 ~32:15/03/2021;33:US ~31:63/266,572 ~32:09/01/2022

2023/09505 ~ Complete ~54:SELF-PROPELLED WORK VEHICLE ~71:MAGNI REAL ESTATE S.R.L., Via Vespucci, 2, 41013, Castelfranco Emilia, Italy ~72: RICCARDO MAGNI~ 33:IT ~31:102021000007268 ~32:25/03/2021

2023/09507 ~ Complete ~54:TRANSGENIC PLANTS WITH IMPROVED TRAITS ~71:PLANTARC BIO LTD., 23b Hateena Street, Israel ~72: GRIMBERG, Noam;KATZ, Aviva;SHALITIN, Dror~ 33:US ~31:63/178,171 ~32:22/04/2021

2023/09509 ~ Complete ~54:CHIRAL N-(1,3,4-OXADIAZOLE-2-YL)PHENYL CARBOXYLIC ACID AMIDES AND THEIR USE AS HERBICIDES ~71:Bayer Aktiengesellschaft, Kaiser-Wilhelm-Allee 1, LEVERKUSEN 51373, GERMANY, Germany ~72: AHRENS, Hartmut;ASMUS, Elisabeth;BOLLENBACH-WAHL, Birgit;BRAUN,

Ralf;DITTGEN, Jan;GATZWEILER, Elmar;JAKOBI, Harald;KÖHN, Arnim;ROSINGER, Christopher Hugh;WALDRAFF, Christian~ 33:EP ~31:21162218.8 ~32:12/03/2021

2023/09496 ~ Complete ~54:WIND POWERED GENERATOR ~71:MARTIN, Christopher Neill, 81B Pascoe St, Australia ~72: MARTIN, Christopher Neill~ 33:AU ~31:2021900711 ~32:11/03/2021

2023/09498 ~ Complete ~54:CENTRING FOR SUPPORTING AND CONSOLIDATING AN EXCAVATION, AND METHOD FOR INSTALLING SUCH A CENTRING INSIDE AN EXCAVATION ~71:OFFICINE MACCAFERRI ITALIA S.R.L., Via Kennedy, 10, Italy ~72: Cristiano BONOMI;Franco TAMBURINI~ 33:IT ~31:102021000014225 ~32:31/05/2021;33:IT ~31:102021000028355 ~32:02/11/2021;33:IT ~31:102022000001559 ~32:31/01/2022;33:IT ~31:102022000009266 ~32:05/05/2022

2023/09504 ~ Complete ~54:PURINE DERIVATIVES AS ANTICANCER AGENTS ~71:MEDIVIR AB, Medivir AB Box 1086, 141 22, Huddinge, Sweden;TANGO THERAPEUTICS, INC., 201 Brookline Ave, Suite 901, Boston, Massachusetts, 02215, United States of America ~72: DANIEL JÖNSSON;SCOTT THRONER~ 33:US ~31:63/162,460 ~32:17/03/2021

2023/09514 ~ Complete ~54:METHOD OF OPTIMIZING A FILLING RECIPE FOR A DRUG CONTAINER ~71:Amgen Inc., One Amgen Center Drive, THOUSAND OAKS 91320-1799, CA, USA, United States of America ~72: GOSWAMI, Devrishi;LE, David;PADMAKUMAR, Vikashni;PIEDMONTE, Deirdre;QI, Wei;SANTOS, Maria Raquel;ZHANG, Jun~ 33:US ~31:63/191,797 ~32:21/05/2021

2023/09476 ~ Complete ~54:IMAGE SEGMENTATION METHOD AND SYSTEM BASED ON MULTI-SCALE DETAIL ENHANCEMENT, DEVICE AND MEDIUM ~71:WUYI UNIVERSITY, No. 22, Dongcheng, Pengjiang, Jiangmen, People's Republic of China ~72: CHEN, Tao;FENG, Yue;LIN, Zhuosheng;LIU, Qichao;MA, Yuangang;WU, Xin;XU, Hong~ 33:CN ~31:202311055780.5 ~32:21/08/2023

2023/09485 ~ Complete ~54:PIPERIDINE UREA DERIVATIVES AS SOLUBLE EPOXIDE HYDROLASE INHIBITORS ~71:NEUROPN THERAPEUTICS, INC., 4989 Peachtree Parkway, Suite 200, Peachtree corners, United States of America ~72: KHANNA, Ish;PILLARISETTI, Sivaram~ 33:US ~31:63/174,665 ~32:14/04/2021

2023/09487 ~ Complete ~54:A GENUS OF CORYNEBACTERIUM MICROORGANISM FOR PRODUCING L-ARGININE AND A METHOD FOR PRODUCING LARGININE USING THE SAME ~71:CJ CHEILJEDANG CORPORATION, 330, DONGHO-RO, JUNG-GU, SEOUL 04560, REP OF KOREA, Republic of Korea ~72: CHANG, Jin Sook;CHOI, Sun Hyoung;KIM, Hyo Kyung;KIM, Hyung Joon;OH, Haena;YOON, Byoung Hoon~ 33:KR ~31:10-2021-0045262 ~32:07/04/2021

2023/09515 ~ Complete ~54:HYDROPHILIC POLYETHER AMINE SOLUTION AND USES THEREOF ~71:Huntsman Petrochemical LLC, 10003 Woodloch Forest Dr., THE WOODLANDS 77380, TX, USA, United States of America ~72: ZHAO, Haibo~ 33:US ~31:63/184,449 ~32:05/05/2021

2023/09519 ~ Complete ~54:SIM CRYPTOGRAPHIC KEY STORAGE ~71:DABCO LIMITED, Vodafone House, The Connection, United Kingdom ~72: BENTO, Jorge;PALMER, David;POSCHKE, Nils~ 33:GB ~31:2105090.1 ~32:09/04/2021

2023/09527 ~ Complete ~54:IONIZABLE LIPIDS AND COMPOSITIONS FOR NUCLEIC ACID DELIVERY ~71:WESTGENE BIOPHARMA CO., LTD., No. 552 Fenghuang Road, Chengdu Tianfu International Bio-Town, Chengdu, People's Republic of China ~72: SONG, Xiangrong;WEI, Xiawei;WEI, Yuquan~ 33:CN ~31:202110396368.4 ~32:13/04/2021

2023/09530 ~ Provisional ~54:TRANSACTIONAL INSURANCE PROPOSAL ~71:James David Gouweloos, 34 Albizia Drive, South Africa ~72: James David Gouweloos~

2023/09471 ~ Provisional ~54:SLIPCLIP CELLPHONE TO CHARGER DEVICE MOBILITY MECHANISM ~71:Shahnawaaz Sheik Adam, 101 Cretemore Road, South Africa ~72: Shahnawaaz Sheik Adam~

2023/09472 ~ Provisional ~54:ADAPTIVE MODULAR APPARATUS & SYSTEM FOR NUDGING BEHAVIOURS IN RECYCLING & WASTE HANDLING ~71:Theo Arthur, 27 Karee Street, South Africa ~72: Theo Arthur~

2023/09474 ~ Complete ~54:AGRICULTURAL CONDITION MONITORING SYSTEM BASED ON INTERNET OF THINGS ~71:My field (Hainan) Agricultural information Technology Co., LTD, 3305-1 3305-1, Building 3, Yabulun Industrial Park, Yazhou Bay Science and Technology City, Yazhou District, Sanya City, Hainan Province, People's Republic of China ~72: JinlingWu;Meng Ke~

2023/09480 ~ Complete ~54:DEVICE FOR TRANSFERRING EXHAUST GAS BETWEEN A FRONT AND REAR CARRIAGE OF A MOBILE WORKING MACHINE SEPARATED BY AN ARTICULATED PIVOT JOINT ~71:LIEBERR-HYDRAULIKBAGGER GMBH, Liebherrstr. 12, Germany ~72: GÖGGEL, Fabian;LOCHER, Thomas~ 33:DE ~31:10 2022 126 255.3 ~32:11/10/2022

2023/09488 ~ Complete ~54:ORAL FORMULATION CONTAINING 1-(3-CYANO-1-ISOPROPYL-INDOL-5-YL)PYRAZOLE-4-CARBOXYLIC ACID ~71:LG CHEM, LTD., 128, YEOUI-DAERO, YEONGDEUNGPO-GU, SEOUL 07336, REPUBLIC OF KOREA, Republic of Korea ~72: JANG, Joomyung;LIM, Dohyung;SEO, Jin A;YOO, Seok Cheol~ 33:KR ~31:10-2021-0049613 ~32:16/04/2021

2023/09493 ~ Complete ~54:HIGH PRESSURE GRINDING ROLL ~71:WEIR MINERALS NETHERLANDS B.V., Egtenrayseweg 9, Netherlands ~72: HESEN, Martijn~ 33:GB ~31:2108261.5 ~32:09/06/2021

2023/09497 ~ Complete ~54:ANTENNA MAST STRUCTURE ~71:CATERPILLAR GLOBAL MINING EQUIPMENT LLC, 3501 S. FM Highway 1417, United States of America ~72: LINGOZI, Baba S. C.;MAMER, Justin R.;MCDANIEL, Quintin W.;VANCE, Michael J.~ 33:US ~31:17/227,893 ~32:12/04/2021

2023/09524 ~ Complete ~54:DIGITAL DISPLAY METHOD AND SYSTEM FOR OUTDOOR ADVERTISING ~71:JCDECAUX SE, 17, rue Soyer, France ~72: BIDARD, Loïc~ 33:FR ~31:FR2103617 ~32:08/04/2021

2023/09470 ~ Provisional ~54:DETONATOR ASSEMBLY ~71:DETNET SOUTH AFRICA (PTY) LTD, AECI Place, The Woodlands, Woodlands Drive, Woodmead, South Africa ~72: LABUSCHANGE Barry;MOROPA Thabiso~

2023/09477 ~ Complete ~54:DEVICE AND METHOD FOR OBTAINING EACH INSECT STATE OF ATRIJUGLANS HETAOHEI YANG ~71:Shandong Institute of Pomology, No.66 Longtan Road, Tai'an City, Shandong Province, People's Republic of China ~72: DIAO Ligong;DONG Fang;LI Yunjing;LIU Tingting;WU Haibin;WU Haibo;ZHANG Ganyu;ZHANG Yong~

2023/09484 ~ Complete ~54:NEW MEDIA PUBLICITY DEVICE FOR INNOVATION AND ENTREPRENEURSHIP BY COLLEGE STUDENTS ~71:Liu Tianji, 21 Bohai Street, Tangshan City, Hebei Province, 063210, People's Republic of China ~72: Liu Tianji;Wang Lei~

2023/09490 ~ Complete ~54:INHIBITOR FOR SORTING MOLYBDENUM-BISMUTH ORES AND APPLICATION THEREOF ~71:CENTRAL SOUTH UNIVERSITY, No.932 South Lushan Road, Changsha, Hunan, 410083, People's Republic of China ~72: HU, Yuehua;LIN, Shangyong;LIU, Runqing;SUN, Wei~ 33:CN ~31:202110408453.8 ~32:16/04/2021

2023/09492 ~ Complete ~54:MALIGNANT NEOPLASIS TREATMENT USING PD-1 ANTIBODY COMBINATION ~71:JOINT STOCK COMPANY "BIOCAD", Pomeshch 89, str. 1, d. 38, ul. Svyazi, The Settlement of Strelna, Intracity Municipality the Settlement of Strelna, Russian Federation ~72: FOGT, Sergei Nikolaevich;KRYUKOV, Fedor Borisovich;MOROZOV, Dmitry Valentinovich;SHUSTOVA, Mariia Stanislavovna~ 33:RU ~31:2021109765 ~32:08/04/2021

2023/09508 ~ Complete ~54:BLOCKCHAIN KEY GENERATION ~71:DABCO LIMITED, Vodafone House, The Connection, United Kingdom ~72: BENTO, Jorge;PALMER, David;POSCHKE, Nils;PRABDIAL, Yakeem~ 33:GB ~31:2105094.3 ~32:09/04/2021

2023/09510 ~ Complete ~54:USE OF GOSSYPOL AND A METHANE INHIBITOR FOR REDUCING THE FORMATION OF METHANE EMANATING FROM THE DIGESTIVE ACTIVITIES OF RUMINANTS ~71:DSM IP Assets B.V., Het Overloon 1, HEERLEN TE 6411 , THE NETHERLANDS, Netherlands ~72: KINDERMANN, Maik;LETINOIS, Ulla;MONTEIRO TAMASSIA, Luis Fernando;STEMMLER, René Tobias;WALKER, Nicola~ 33:EP ~31:21168703.3 ~32:15/04/2021

2023/09513 ~ Complete ~54:CIRCULAR KNITTING MACHINE FOR HOSIERY OR THE LIKE AND METHOD FOR PRODUCING A TUBULAR MANUFACTURE ~71:Lonati S.p.A., Via Francesco Lonati, 3, BRESCIA 25124, ITALY, Italy ~72: LONATI, Ettore;LONATI, Fausto;LONATI, Francesco~ 33:IT ~31:102021000014318 ~32:01/06/2021

2023/09516 ~ Complete ~54:ANTI-CCR8 ANTIBODIES ~71:AbbVie Inc., 1 N. Waukegan Road, Dept. V377 Bldg., Ap34-2, NORTH CHICAGO 60064, IL, USA, United States of America ~72: MCCLUSKEY, Andrew J.;SCHMIDT PAUSTIAN, Amanda M.;SEAGAL, Jane;WILSBACHER, Julie L.~ 33:US ~31:63/226,118 ~32:27/07/2021

2023/09520 ~ Complete ~54:SECURE SENSOR DATA DISTRIBUTION ~71:DABCO LIMITED, Vodafone House, The Connection, United Kingdom ~72: BENTO, Jorge;PALMER, David;POSCHKE, Nils;PRABDIAL, Yakeem~ 33:GB ~31:2105097.6 ~32:09/04/2021

2023/09481 ~ Complete ~54:SMART VALVE WITH INTEGRATED ELECTRONICS ~71:BRAY INTERNATIONAL, INC., 13333 Westland E. Blvd., Houston, Texas, 77041, United States of America ~72: BRINDESH DHRUVA;CRAIG BROWN;JIM SCHMIDT;MICHAEL KITCHENS;STAN ALLEN~ 33:US ~31:62/744,793 ~32:12/10/2018

2023/09486 ~ Complete ~54:PSILOCYBIN ANALOGS, SALTS, COMPOSITIONS, AND METHODS OF USE ~71:CYBIN IRL LIMITED, ONE SPENCER DOCK, NORTH WALL QUAY, DUBLIN 1, IE D01X9R7, IRELAND, Ireland ~72: AVERY, Kenneth L.;HUANG, James, He;KRAKOWSKY, Joan M.;MORGAN, Michael E.;NIVOROZHKIN, Alex;PALFREYMAN, Michael;PATHARE, Pradip;SHUKOOR, Mohammed~ 33:US ~31:63/162,749 ~32:18/03/2021;33:US ~31:63/276,117 ~32:05/11/2021

2023/09489 ~ Complete ~54:FEEDING APPARATUS AND FEEDING METHOD FOR BREEDING FROGS IN PADDY FIELD ~71:TONGWEI AGRICULTURAL DEVELOPMENT CO., LTD, Tongwei International Center, No. 588 Middle Section of Tianfu Ave, High Tech Zone, People's Republic of China ~72: LI, Baosheng;MI, Haifeng;TENG, Tao;WANG, Wugang;WEN, Yuanhong;YIN, Heng;ZHANG, Lu~

2023/09494 ~ Complete ~54:BAG OPENING DEVICE ~71:AGRO BAG A/S, Gummersmarkvej 17, Denmark ~72: BIRKEDAL, Mads~ 33:PL ~31:P.437722 ~32:28/04/2021

2023/09502 ~ Complete ~54:BLOCKCHAIN KEY GENERATION ~71:DABCO LIMITED, Vodafone House, The Connection, United Kingdom ~72: BENTO, Jorge;PALMER, David;POSCHKE, Nils~ 33:GB ~31:2105086.9 ~32:09/04/2021

2023/09506 ~ Complete ~54:COMPOSITIONS AND METHODS FOR TREATING TDP-43 PROTEINOPATHY ~71:MAZE THERAPEUTICS, INC., 171 Oyster Point Blvd, Suite 300, South San Francisco, California, 94080, United States of America ~72: DAVID WYATT;ERIC GREEN;GEORGIANA MILLER;NATHAN SALLEE;SHILA MEKHOUBAD~ 33:US ~31:63/171,522 ~32:06/04/2021;33:US ~31:63/312,808 ~32:22/02/2022

2023/09517 ~ Complete ~54:SOLID FORMS OF A MODULATOR OF HEMOGLOBIN ~71:Global Blood Therapeutics, Inc., 181 Oyster Point Boulevard, SOUTH SAN FRANCISCO 94080, CA, USA, United States of America ~72: HOUSTON, Travis Lee;JOHNSON, Courtney S.;PARENT, Stephan D.;WANG, Fang~ 33:US ~31:63/188,833 ~32:14/05/2021

2023/09522 ~ Complete ~54:MODIFIED POLY(M-PHENYLENE ISOPHTHALAMIDE) ULTRAFILTRATION MEMBRANE, PREPARATION METHOD THEREOF, AND APPLICATION THEREOF ~71:BEIJING INSTITUTE OF TECHNOLOGY, No. 5 Zhongguancun South Street, Haidian District, People's Republic of China ~72: WANG, Tao;ZHANG, Luyao;ZHAO, Zhenzhen;ZHAO,Zhiping;ZHENG, Xi~ 33:CN ~31:202111082594.1 ~32:15/09/2021

2023/09478 ~ Complete ~54:METHOD FOR IMPROVING ACTIVITY INDEX OF AOD STEEL SLAG POWDER ~71:North China University Of Science And Technology, No.21, Bohai Avenue, Xincheng, Caofeidian District, Tangshan City, Hebei Province, 063210, People's Republic of China ~72: Jianbao Zhang;Junguo Li;Lijie Peng;Mengjie Tao;Shaohua Liu;Song Qin;Xiaopei Zhang;Yajun Wang;Yanan Zeng;Yitong Wang~

2023/09482 ~ Complete ~54:A PIPE WEAR MONITORING SYSTEM AND METHOD OF USE THEREOF ~71:2C HOLDINGS PTY LTD, 15 Logan Crescent Erakala, Queensland 4740, Australia ~72: COLIN NEIL EAMES;COREY VAUGHAN~ 33:AU ~31:2019901154 ~32:04/04/2019

2023/09495 ~ Complete ~54:MONOCLONAL ANTIBODY THAT SPECIFICALLY BINDS TO GD2 ~71:JOINT STOCK COMPANY "BIOCAD", Pomeshch 89, str. 1, d. 38, ul. Svyazi, The Settlement of Strelna, Intracity Municipality the Settlement of Strelna, Russian Federation ~72: AGEEV, Sergei Andreevich;CHERNYKH, Yulia Sergeevna;GREFENSHTEIN, Mariia Anatolevna;IAKOVLEV, Pavel Andreevich;KONDINSKAIA, Diana Aleksandrovna;MOROZOV, Dmitry Valentinovich;SAKHAROVA, Dina Khaidarovna;SHIGINA, Valeriia Evgenevna;SOLOVYEV, Valery Vladimirovich;STOLYAROVA, Alina Konstantinovna~ 33:RU ~31:2021107773 ~32:24/03/2021

2023/09499 ~ Complete ~54:NANOPARTICLE-ENHANCED LEAD-ACID ELECTRODE PASTE AND IMPROVED LEAD-ACID BATTERIES MADE THEREFROM ~71:EVOQ NANO, INC., 1865 West 2100 South, Suite 150, United States of America ~72: NIEDERMEYER, William~ 33:US ~31:17/216,996 ~32:30/03/2021;33:US ~31:63/197,605 ~32:07/06/2021

2023/09523 ~ Complete ~54:OPIOID RECEPTOR MODULATORS ~71:EPIODYNE, INC., 953 Indiana Street, United States of America ~72: BHATT, Ulhas;CHENG, Heng;DING, Pingyu;DUQUETTE, Jason;HOLAN, Martin;LEE, John;LI, Yihong;MEDINA, Julio Cesar;NERURKAR, Alok;NGUYEN, Thomas;SADLOWSKI, Corinne;SEIDL, Frederick;WANG, Xiaodong;WEI, Zhi-liang;WIDJAJA, Tien~ 33:US ~31:63/171,008 ~32:05/04/2021;33:US ~31:63/318,486 ~32:10/03/2022

2023/09525 ~ Complete ~54:GAS-OPERATED VALVE ~71:REACTON FIRE SUPPRESSION LIMITED, 14 Baynes Place, Waterhouse Business Park, United Kingdom ~72: KOUTSOS, Theodoros~ 33:EP ~31:21386024.0 ~32:08/04/2021;33:GB ~31:2107554.4 ~32:27/05/2021

. - APPLIED ON 2023/10/12 -

2023/09532 ~ Provisional ~54:PALLET ~71:CYCLIQ (PTY) LTD, 16 Makriel Road, Wadeville, South Africa ~72: GRAHAM COLMAN~

2023/09546 ~ Complete ~54:AGROCHEMICAL COMPOSITION OF SOLID STATE FORM OF PYROXASULFONE ~71:Adama Agan Ltd., P.O. Box 262, Northern Industrial Zone, ASHDOD 7710201, ISRAEL, Israel ~72: ARONHIME, Judith;SELLA-EREZ, Rotem~ 33:US ~31:62/961,233 ~32:15/01/2020

2023/09563 ~ Complete ~54:METHODS FOR REVOKING INTER-DONOR TOPOLOGY ADAPTATION IN INTEGRATED ACCESS AND BACKHAUL NETWORKS ~71:TELEFONAKTIEBOLAGET LM ERICSSON (PUBL), 164 83, Sweden ~72: BARAC, Filip;BELLESCHI, Marco;PRADAS, Jose Luis;SHREEVASTAV, Ritesh~ 33:US ~31:63/176,937 ~32:20/04/2021

2023/09570 ~ Provisional ~54:DRONE ~71:SMIT: DIRK VAN ZYL, PLOT 37, 7 MOUNTAIN DRIVE, DERDEPOORT, South Africa;SMIT: HENDRIK VAN ZYL, 98 SELROSE PARK, 5 GRIFFITH AVENUE, EQUESTRIA, South Africa ~72: SMIT: DIRK VAN ZYL;SMIT: HENDRIK VAN ZYL~

2023/09531 ~ Provisional ~54:INSTANT PAYMENT SOLUTION ~71:RUSHERN RUVASHIN CHETTY, 3 Cotswold Drive, South Africa ~72: RUSHERN RUVASHIN CHETTY~

2023/09534 ~ Complete ~54:PHARMACEUTICAL COMPOSITION FOR TREATING CHILDREN'S CHRONIC ALLERGIC RHINITIS AND PREPARATION METHOD THEREOF ~71:The Affiliated Hospital of Qingdao University, No.16 Jiangsu Road, Shinan District, Qingdao City, Shandong Province, People's Republic of China ~72: GAO Zezheng;QI Shubin;YIN Qian;ZHOU Jie~

2023/09539 ~ Complete ~54:MULTI-FIELD TEMPERATURE TRIAXIAL TEST DEVICE FOR COARSE-GRAINED SOIL ~71:CHINA CONSTRUCTION SECOND ENGINEERING BUREAU LTD., 251 Beiyangwa, Liyuan Town, Tongzhou District, Beijing, People's Republic of China;Hohai University, No.1 Xikang Road, Gulou District, Nanjing City, Jiangsu Province, People's Republic of China;THE CIVIL ENGINEERING GROUP CORPORATION OF CHINA CONSTRUCTION SECOND ENGINEERING BUREAU LTD., 1-3/F, No. 21 Liyuan North Street, Tongzhou District, Beijing, People's Republic of China ~72: DING Xuezheng;GAO Lei;HU Xiaochuan;LIAO Manping;YAO Zaifeng~ 33:CN ~31:2023204647706 ~32:13/03/2023

2023/09545 ~ Complete ~54:RAIL JOINT ~71:PENN-CLARKE, Craig, 505 Wonderboom Street, South Africa ~72: PENN-CLARKE, Craig~ 33:ZA ~31:2022/07748 ~32:13/07/2022

2023/09551 ~ Complete ~54:COMBINED MICROWAVE PYROLYSIS AND PLASMA METHOD AND REACTOR FOR PRODUCING OLEFINS ~71:MICROWAVE SOLUTIONS GMBH, CHRISCHONAWEG 99, 4125 RIEHEN, SWITZERLAND, Switzerland ~72: ROSSOUW, Mathys Johannes;STAPELA, Annelie~ 33:CH ~31:00312/21 ~32:24/03/2021

2023/09562 ~ Complete ~54:IMPROVED STABILITY OF INTER-CHANNEL TIME DIFFERENCE (ITD) ESTIMATOR FOR COINCIDENT STEREO CAPTURE ~71:TELEFONAKTIEBOLAGET LM ERICSSON (PUBL), SE-164 83, Sweden ~72: JANSSON TOFTGÅRD, Tomas;NORVELL, Erik~

2023/09568 ~ Complete ~54:TREATMENT OF NEUROPATHIC CORNEAL PAIN WITH NGF ~71:Dompé farmaceutici S.p.A., Via Santa Lucia 6, MILANO 20122 , ITALY, Italy;Tufts Medical Center, Inc., 800 Washington Streeet, BOSTON 02111, MA, USA, United States of America ~72: HAMRAH, Pedram;MANTELLI, Flavio~ 33:US ~31:63/174,163 ~32:13/04/2021

2023/09535 ~ Complete ~54:MEDICINE FOR RELIEVING POSTOPERATIVE SYNDROME OF RENAL ARTERY EMBOLIZATION ~71:CHEN, Hailin, Second Health Center, Wulihou, Luhua Office, Lucheng City, Changzhi City, Shanxi Province, 046000, People's Republic of China ~72: CHEN, Hailin;CHEN, Lingfeng~

2023/09547 ~ Complete ~54:NEURAL NETWORK MODEL-BASED PNEUMONIA FEATURE RECOGNITION METHOD AND APPARATUS, AND ELECTRONIC DEVICE ~71:NORTH CHINA UNIVERSITY OF SCIENCE AND TECHNOLOGY, No. 21, Bohai Avenue, Caofeidian New City,, Tangshan, Hebei, 063210, People's Republic of China ~72: FAN, Qiuhong;LI, Shuang;SHAN, Yan;ZHANG, Lixiang;ZHANG, Mei~ 33:CN ~31:202210844283.2 ~32:18/07/2022

2023/09554 ~ Complete ~54:ADENOSINE DEAMINASE VARIANTS AND USES THEREOF ~71:BEAM THERAPEUTICS INC., 238 Main Street, 9th Floor, Cambridge, Massachusetts, 02142, United States of America ~72: DIETER KA YEUNG LAM;NICOLE GAUDELLI;PATRICIA ROSA FELICIANO;SEUNG-JOO LEE~ 33:US ~31:63/166,778 ~32:26/03/2021;33:US ~31:63/229,057 ~32:03/08/2021

2023/09558 ~ Complete ~54:TORREFACTION UNIT AND METHOD ~71:RWE GENERATION NL B.V., Amerweg 1, 4931, NC Geertruidenberg, Netherlands ~72: JOHANNES THEODORUS GERARDUS MARIE EURLINGS~ 33:EP ~31:21200579.7 ~32:01/10/2021

2023/09565 ~ Complete ~54:EDIBLE NON-ANIMAL DAIRY SUBSTITUTE PRODUCT COMPRISING FIBROUS MYCELIUM AS PROTEIN AND INSOLUBLE FIBER COMPONENT AND METHODS OF PRODUCING SUCH ~71:Mushlabs GmbH, Humboldtstraβe 59, HAMBURG 22083, GERMANY, Germany ~72: ALBANESE, Guido;AYASS, Wassim W.;GODARD, Thibault;PREISSER, Anne-Cathrine;RIZK, Mazen~ 33:EP ~31:21168712.4 ~32:15/04/2021

2023/09548 ~ Complete ~54:A SYSTEM FOR RECOGNIZING UNSAFE BEHAVIORS IN INDUSTRIAL WORKPLACES BASED ON IMAGE RECOGNITION TECHNOLOGY ~71:Huaneng Chongqing Liangjiang Gas Turbine Power Generation Co. LTD, 3 Yunhan Avenue, Water and Soil High-tech Industrial Park,, Beibei District, Chongqing, 400700, People's Republic of China ~72: CHEN binghong;DENG yuehui;FENG pengyu;KANG qian;LI tao;LIU jing;SHI can;SU lin;WU changbing;XIANG dong;XU ke;ZHANG chenyu;ZHANG dayong;ZHANG shuang;ZHANG wei;ZHAO wenbo;ZHOU gang~ 33:CN ~31:2022116244481 ~32:16/12/2022

2023/09553 ~ Complete ~54:LINE-1 INHIBITORS TO TREAT CNS AND SYSTEMIC DISEASES ~71:TRANSPOSON THERAPEUTICS, INC., 4660 La Jolla Village Drive, Suites 100 & 200, San Diego, California, 92122, United States of America ~72: ECKARD WEBER;MICHAEL G CORDINGLEY~ 33:US ~31:63/161,050 ~32:15/03/2021

2023/09559 ~ Complete ~54:FUNGICIDAL PYRIDONES ~71:FMC CORPORATION, 2929 Walnut Street, Philadelphia, Pennsylvania, 19104, United States of America ~72: DANIEL AKWABOAH;JEFFREY KEITH LONG~ 33:US ~31:63/174,332 ~32:13/04/2021

2023/09564 ~ Complete ~54:UPAR ANTIBODIES AND FUSION PROTEINS WITH THE SAME ~71:ALKERMES, INC., 852 Winter Street, United States of America ~72: DONG, Jijun;GUREL, Pinar;HEIBER, Joshua;HU, Yuan~ 33:US ~31:63/165,313 ~32:24/03/2021

2023/09533 ~ Provisional ~54:CONNECTOR ASSEMBLY ~71:EVA-LAST HONG KONG LIMITED, 12/F TOWER 3, 33 CANTON RD, TSIMSHATSUI, Hong Kong ~72: BRANDON JAY HEUKELMAN;CAITLYNNE GAIL COLLENDER;GARETH WADE GADSBY CHAPMAN~

2023/09538 ~ Complete ~54:MASK WITH SPUTUM DISCHARGE FUNCTION AND SPUTUM DISCHARGE METHOD THEREOF ~71:THE AFFILIATED HOSPITAL OF GUIZHOU MEDICAL UNIVERSITY, No. 28, Guiyi

Street, Yunyan District, Guiyang City, Guizhou Province, 550025, People's Republic of China ~72: CAO, Yi;CHEN, Guangtang;CUI, Junshuan;FENG, Xiaoyun;SHI, Xueping;SONG, Wenxue;WANG, Xingsong;WU, Zeya;YANG, Yuanmei;ZENG, Xi;ZHUO, Yingquan~

2023/09541 ~ Complete ~54:LASER 3D PRINTING NOZZLE FOR METAL POWDER ~71:Changzhou Institute of Technology, No.666 Liaohe Road, Changzhou, Jiangsu Province, 213032, People's Republic of China ~72: Bai Jianhui;Guo Hun;He Yafeng;Xu Bo~

2023/09544 ~ Complete ~54:VEHICLE ARMOUR ~71:Biagi Saga Technologies (Pty) Limited, 45 Eva Road, Fairleads AH, South Africa;Meagan Grobler, 16 Hamilton Close, 65 Kirschner Road AH, South Africa ~72: Gerald Kuisis~

2023/09549 ~ Complete ~54:CEILING GRID HANGER HOLES ~71:USG INTERIORS, LLC, 550 West Adams Street Chicago, United States of America ~72: GULBRANDSEN, Peder J.;MATHIOT, Nathan;O'DONNELL, Michael P.~ 33:US ~31:17/227,891 ~32:12/04/2021

2023/09555 ~ Complete ~54:INHIBITORS OF THE MENIN-MLL INTERACTION ~71:SYNDAX PHARMACEUTICALS, INC., 35 Gatehouse Drive, Building D, Floor 3, Waltham, Massachusetts, 02451, United States of America;VITAE PHARMACEUTICALS, LLC, 1 North Waukegan Road, North Chigago, Illinois, 60064, United States of America ~72: GERARD M MCGEEHAN;NICHOLAS PAUL CAMP;SALVACION CACATIAN;SANTOSH S KULKARNI;SWAPAN KUMAR SAMANTA;VIRSINHA VENKAT REDDY;WILLIAM H MILLER~ 33:US ~31:63/188,704 ~32:14/05/2021

2023/09567 ~ Complete ~54:BINDING MOLECULE AGAINST DLL3 AND USE THEREOF ~71:Shanghai Qilu Pharmaceutical Research and Development Centre Ltd., Building 1, No. 576 Li Bing Road, No. 56 Faraday Road, China (Shanghai) Pilot Free Trade Zone, Pudong New Area, SHANGHAI 201203, CHINA (P.R.C.), People's Republic of China ~72: CHOU, Chuan-Chu;GU, Jinming;LI, Ruimei;YANG, Liuqing~ 33:CN ~31:202110499247.2 ~32:08/05/2021;33:CN ~31:202210460557.8 ~32:24/04/2022

2023/09537 ~ Complete ~54:ACUPOINT PATCH FOR TREATING LIVER CIRRHOSIS AND CIRRHOTIC ASCITES AND PREPARATION METHOD THEREOF ~71:CHEN, Hailin, Second Health Center, Wulihou, Luhua Office, Lucheng City, Changzhi City, Shanxi Province, 046000, People's Republic of China ~72: CHEN, Hailin;CHEN, Lingfeng~

2023/09542 ~ Complete ~54:AUTOMATIC TESTING DEVICE FOR BOTTOM PLATES OF OIL STORAGE TANK ~71:Xi'an Shiyou University, No. 18, East Section of Electronic Second Road, Xi'an City, Shaanxi Province, 710065, People's Republic of China ~72: Kang Simin~ 33:CN ~31:202211291316.1 ~32:19/10/2022

2023/09543 ~ Complete ~54:SYSTEMS AND METHODS FOR DAMAGE DETECTION ~71:BELRON INTERNATIONAL LIMITED, Milton Park Stroude Road, Egham, United Kingdom ~72: DAVIES, Christopher;FRANCIS, Kelly~ 33:GB ~31:1701924.1 ~32:06/02/2017

2023/09552 ~ Complete ~54:VARIABLE-PITCH INSTALLATION AND DEBUGGING SYSTEM AND OPERATION METHOD THEREOF ~71:ENVISION ENERGY CO., LTD, No.3 Shenzhuang Road, New Energy Industrial Park of JiangYin Harbor Economic Development District, Wuxi, Jiangsu, 214443, People's Republic of China ~72: CHUNGUO YANG;PENG LIU;XIAOYU WANG;ZHENHUA QIAN~

2023/09561 ~ Complete ~54:CUSTOMIZE JEWELRY DESIGN BY TRANSPOSITION OF DATES INTO TIMES ~71:STEVEN J BAUER, 113 Doubletree Drive, Venetia, Pennsylvania, 15367, United States of America ~72: STEVEN J BAUER~ 33:US ~31:17/210,208 ~32:23/03/2021

2023/09566 ~ Complete ~54:3,4-DIHYDRO-2,7-NAPHTHYRIDINE-1,6(2H,7H)-DIONES AS MEK INHIBITORS ~71:Pfizer Inc., 66 Hudson Boulevard East, NEW YORK 10001-2192, NY, USA, United States of America ~72: ALLEN, Shelley;BLAKE, James Francis;BLANCHE, Sydney Taylor;BOYS, Mark Laurence;CLARK, Wesley Dewitt;COWDREY, Connor James;DAHLKE, Joshua Ryan;DOERNER BARBOUR, Patrick Michael;FULTON, Jennifer Lynn;KELLUM, Alex Andrew;KNAPP, Ellen Margaret;MORENO, David Austin;O'LEARY, Jacob Matthew;REN, Li;WITKOS, Faith Elizabeth~ 33:US ~31:63/168,456 ~32:31/03/2021;33:US ~31:63/309,346 ~32:11/02/2022

2023/09536 ~ Complete ~54:TRADITIONAL CHINESE MEDICINE COMPOSITION FOR TREATING POSTOPERATIVE HILAR CHOLANGIOCARCINOMA AND CANCER METASTASIS ~71:CHEN, Hailin, Second Health Center, Wulihou, Luhua Office, Lucheng City, Changzhi City, Shanxi Province, 046000, People's Republic of China ~72: CHEN, Hailin;CHEN, Lingfeng~

2023/09557 ~ Complete ~54:EMULSIFIED CONDIMENT ~71:MCCORMICK & COMPANY, INCORPORATED, 24 Schilling Road, Suite 1, Hunt Valley, Maryland, 21031, United States of America ~72: BREANNE J MCDAVID;DENNIS DAVID ROBERTSON;JR RONALD MOORE~ 33:US ~31:17/212,305 ~32:25/03/2021

2023/09540 ~ Complete ~54:PROTEINS WITH CARDIOPROTECTIVE ACTIVITY ~71:INTERNATIONAL CENTRE FOR GENETIC ENGINEERING AND BIOTECHNOLOGY (ICGEB), AREA Science Park, Padriciano 99, 34149, Trieste, Italy ~72: FRANCESCA BORTOLOTTI;GIULIA RUOZI;MAURO GIACCA~ 33:GB ~31:1906052.4 ~32:30/04/2019

2023/09550 ~ Complete ~54:A SPORTS AID ~71:FERGUSON, Michelle, Marie, 5 GOLDEN ASH PLACE, FOURWAYS, SANDTON, 2191, SOUTH AFRICA, South Africa ~72: FERGUSON, Dominique, Micaela;FERGUSON, Michelle, Marie~ 33:ZA ~31:2021/01673 ~32:12/03/2021

2023/09556 ~ Complete ~54:METHOD AND SYSTEM FOR COATING FILTER MEDIA ~71:MOLECULAR PLASMA GROUP S.A., Technoport 4B - Rue du commerce, Foetz, 3895, Luxembourg ~72: JAN VANSANT;JOANNA BOREK-DONTEN;MAXIMILIEN LOPES;RÉGIS HEYBERGER~ 33:EP ~31:21175835.4 ~32:25/05/2021

2023/09560 ~ Complete ~54:METHOD FOR PRODUCING PHOSPHORYL OR THIOPHOSPHORYL TRIAMIDE, AND USE OF COMPOUND IN NITROGEN FERTILIZER FORMULATIONS ~71:NOVAEM BBTRADE, 44 rue Montmejean, 33100, Bordeaux, France ~72: BERNARD BEAL;BRUNO MONTAGNIER;ERIC BELLEPERCHE~ 33:FR ~31:2104347 ~32:27/04/2021

2023/09569 ~ Complete ~54:ONLINE REAL-TIME REGISTRATION METHOD FOR INCOMPLETE THREE-DIMENSIONAL SCANNING POINT CLOUD HAVING PLANE REFERENCE ~71:GUANGDONG SAMSUN TECHNOLOGY CO., LTD., Hongbai No. 3 Zhongnan S. Rd W., Shangsha Haibin Dist., Changan Town, Dongguan, Guangdong, 523846, People's Republic of China ~72: CHEN, Yingtao;LI, Zhenhan;LU, Shaowu;TAN, Hui;TANG, Shengshui;TANG, Xiaoqi;YAN, Changya;ZHANG, Qingxiang;ZHENG, Xiaoze;ZHOU, Xiangdong~ 33:CN ~31:202110498865.5 ~32:08/05/2021

. - APPLIED ON 2023/10/13 -

2023/09581 ~ Complete ~54:METHOD FOR IMPROVING IN VITRO MATURATION AND DEVELOPMENT RATE OF PORCINE OOCYTES ~71:Institute of Animal Husbandry , Henan Academy of Agricultural Sciences, NO.116,Huayuan Road, Jinshui District, Zhengzhou city, Henan Province, People's Republic of China ~72: LIU Hongbo;LU Qingxia;LV Lingyan;REN Qiaoling;SHEN Ming;WANG Xianwei;XING Baosong;YAN Xiangzhou;ZHANG Jiaqing~

2023/09584 ~ Complete ~54:QUENCHING AND TEMPERING METHOD FOR NAPHTHALENE MESOPHASE PITCH ~71:JINING KENENG NEW CARBON MATERIAL TECHNOLOGY CO., LTD, JIBEI HIGH-TECH INDUSTRIAL PARK, People's Republic of China;SHANDONG CHENYANG NEW CARBON MATERIALS RESEARCH INSTITUTE CO., LTD, IN THE COURTYARD OF CHENYANG COMPANY, NEW MATERIALS INDUSTRIAL PARK, People's Republic of China ~72: FENG, Guangqiang;YAN, Guilin;YAN, Ping;YU, Ping;ZHANG, Haixia;ZHANG, Lin~ 33:CN ~31:2023104794682 ~32:28/04/2023

2023/09590 ~ Complete ~54:PROCESS AND SYSTEM FOR PRODUCING A TARGET COMPOUND ~71:CLARIANT INTERNATIONAL LTD., Rothausstraße 61, Switzerland;LINDE GMBH, Dr.-Carl-von-Linde-Strasse 6-14, Germany ~72: MEISWINKEL, Andreas;MESTL, Gerhard;SCHECK, Peter;SCHUBERT, Martin;WÖHL, Anina;WANNINGER, Klaus;ZELLHUBER, Mathieu~ 33:DE ~31:10 2021 202 495.5 ~32:15/03/2021

2023/09592 ~ Complete ~54:PEPTIDES AND METHODS OF USE ~71:REALTA LIFE SCIENCES, INC., 5665 Lowery Road #100, United States of America ~72: CUNNION, Kenji;KRISHNA, Neel K.;THIENEL, Ulrich~ 33:US ~31:63/195,401 ~32:01/06/2021;33:US ~31:63/279,423 ~32:15/11/2021

2023/09607 ~ Complete ~54:MACROCYCLES AS CFTR MODULATORS ~71:Idorsia Pharmaceuticals Ltd, Hegenheimermattweg 91, ALLSCHWIL 4123, SWITZERLAND, Switzerland ~72: BOLLI, Martin;BROTSCHI, Christine;COMMANDEUR, Malgorzata;GATFIELD, John;KIMMERLIN, Thierry;SIENDT, Hervé;SPRINGER, Jasper;WAGNER, Clemens;WEGERT, Anita;WILLIAMS, Jodi T.~ 33:IB ~31:2021/056724 ~32:16/03/2021

2023/09616 ~ Complete ~54:RESET DYNAMIC ADDRESS TRANSLATION PROTECTION INSTRUCTION ~71:INTERNATIONAL BUSINESS MACHINES CORPORATION, New Orchard Road, United States of America ~72: BORNTRAEGER, Christian;GAERTNER, Ute;GIAMEI, Bruce;HELLER, Lisa;OSISEK, Damian;SLEGEL, Timothy;TZORTZATOS, Elpida;YOST, Christine~ 33:US ~31:17/335,224 ~32:01/06/2021

2023/09589 ~ Complete ~54:A DOWNHOLE ASSEMBLY WITH SPRING ISOLATION FILTER ~71:VECTOR MAGNETICS LLC, 236 Cherry Street, United States of America ~72: GARCIA, Mariano;KUCKES, Arthur F;THOMPSON, Morgan~

2023/09599 ~ Complete ~54:BIOMARKERS OF MUSCULOSKELETAL INJURY ~71:MARKER HOLDINGS AG, Bahnhofstrasse 20, 6300 Zug, Switzerland ~72: ANTONIO BELLI;VALENTINA DI PIETRO~ 33:US ~31:63/170,438 ~32:02/04/2021

2023/09613 ~ Complete ~54:METHOD FOR PRODUCING A SHAPED BODY FROM PLASTIC WASTE AND NATURAL FIBRES ~71:DANN, Reimund, Vohren 1a, WARENDORF D-48231, GERMANY, Germany;HUWE, Alexander, Martin-Luther-Straße 24, BAD VIBEL D-61118, GERMANY, Germany ~72: DANN, Reimund;HUWE, Alexander~ 33:DE ~31:10 2021 106 195.4 ~32:15/03/2021

2023/09615 ~ Complete ~54:LIQUID CANNON ~71:CLEAN PLANT PTY LTD, 187 Lawrence Street, Bedford, Australia ~72: MUNRO, Braydon~ 33:AU ~31:2021901243 ~32:27/04/2021

2023/09577 ~ Provisional ~54:TONOMETRY APPARATUS AND METHOD OF USE ~71:ANDERSON, Sean Glen, 16 Pepper Tree Lane, 55 1st St, Linden, Randburg 2104, SOUTH AFRICA, South Africa ~72: ANDERSON, Sean Glen~

2023/09579 ~ Complete ~54:POSTHARVEST METHOD FOR SIMUTANEOUSLY INDUCING PIGMENT ACCUMULATION IN PEEL AND PULP OF MANGOES ~71:Hainan University, No. 58, Renmin Avenue, Meilan District, Haikou City, Hainan Province, People's Republic of China ~72: Chengkun YANG;Kaibing ZHOU;Minjie QIAN;Qin DENG;Wencan ZHU;Xiaowen WANG~ 33:CN ~31:202311167412X ~32:12/09/2023

2023/09593 ~ Complete ~54:GAS-LIQUID-SOLID AND LIQUID-SOLID REACTOR CASCADE FOR CARRYING OUT CONTINUOUS-FLOW CHEMICAL REACTIONS UNDER HIGH PRESSURE AND/OR HIGH TEMPERATURE ~71:IPSOMEDIC, 1, Place Félix Baret 13006, Marseille, France ~72: EDITH LECOMTE-NORRANT~ 33:FR ~31:FR2104386 ~32:27/04/2021

2023/09595 ~ Complete ~54:ALPHA-1-ANTITRYPSIN (AAT) IN THE TREATMENT AND/OR PREVENTION OF NEUROLOGICAL DISORDERS ~71:AGERONIX SA, C/O ABCYS BUSINESS & CONSULTING SÀRL Rue du Tir-au-Canon 4, 1227, Carouge, Switzerland ~72: NIKOLAY ZHUKOVSKY~ 33:EP ~31:PCT/EP2021/061597 ~32:03/05/2021;33:EP ~31:21206096.6 ~32:02/11/2021;33:EP ~31:22168622.3 ~32:14/04/2022

2023/09597 ~ Complete ~54:PLURIPOTENT STEM CELL-DERIVED HEMATOPOIETIC LINEAGES ~71:GARUDA THERAPEUTICS, INC., 22 Strathmore Road, Suite 414, Natick, Massachusetts, 01760, United States of America ~72: DHVANIT SHAH~ 33:US ~31:63/168,360 ~32:31/03/2021

2023/09601 ~ Complete ~54:A COMPOSITION FOR USE IN THE TREATMENT OF URINARY OR FAECAL INCONTINENCE ~71:AALTO UNIVERSITY FOUNDATION SR, P.O. Box 11000, Aalto, 00076, Finland ~72: EIJA RAUSSI-LEHTO;JANI KUULA;ORLANDO ROJAS;RUBINA AJDARY;TOMI MIKKOLA~ 33:FI ~31:20217052 ~32:16/03/2021

2023/09608 ~ Complete ~54:MODULATORS OF BCL6 PROTEOLYSIS AND ASSOCIATED METHODS OF USE ~71:Arvinas Operations, Inc., 5 Science Park, NEW HAVEN 06511, CT, USA, United States of America ~72: BERLIN, Michael;DONG, Hanqing;SHERMAN, Dan;SNYDER, Lawrence B.;WANG, Jing;ZHANG, Wei~ 33:US ~31:63/175,678 ~32:16/04/2021

2023/09610 ~ Complete ~54:WEAR ASSEMBLY ~71:ESCO Group LLC, 2141 NW 25th Avenue, PORTLAND 97210-2578, OR, USA, United States of America ~72: GREWELL, Christopher E.;LEEDHAM, Cameron R.;SNYDER, Christopher D.;WOOD, Clinton A.~ 33:US ~31:63/176,065 ~32:16/04/2021

2023/09618 ~ Complete ~54:METHOD FOR OBTAINING PURIFIED SILICON METAL ~71:FERROGLOBE INNOVATION, S.L., Paseo de la Castellana, 259-D. Planta 49., Spain ~72: BERTHOLLET, Damien;COCCO, François;DIEGUEZ, Joaquín;FAY, Aurélie;MIGUEZ, José Manuel;ORDÁS, Ramón;RIVAT, Pascal;VARELA, Gonzalo~ 33:EP ~31:21382359.4 ~32:26/04/2021

2023/09572 ~ Provisional ~54:A FEEDSTOCK DELIVERY DEVICE FOR CONTINUOUS FEEDING OF A FEEDSTOCK TO A PYROLYSIS REACTOR ~71:ROOIKAT PROJECTS (PTY) LTD, 229 Protea Drive, Pinnacle Point, South Africa ~72: HOBBS, Mark~

2023/09573 ~ Provisional ~54:A CABLE HANDLING AND STEEL ROPE UNCOILING APPARATUS AND A METHOD OF HANDLING A CABLE OR STEEL ROPE ~71:JACOBS, Pieter Daniel, 29 Essenhot Avenue, Protea Park, RUSTENBURG 0305, North West Province, SOUTH AFRICA, South Africa ~72: JACOBS, Pieter Daniel~

2023/09574 ~ Provisional ~54:FUEL COMPOSITION FOR COMBUSTION ~71:The Trustees for the time being of the KMN FULFILMENT TRUST, 8 Kestrel Street, Ebotse Golf Estate, Rynfield, BENONI 1504, SOUTH AFRICA, South Africa ~72: MAKGERU, Kabu Walter~

2023/09580 ~ Complete ~54:METHOD FOR PREPARING LANGERHANS CELL-DERIVED EXOSOMES ~71:Jiangsu Vocational College of Medicine, No. 283, Jiefang South Road, Yancheng City, Jiangsu Province, 224008, People's Republic of China ~72: GE, Anxing~

2023/09583 ~ Complete ~54:PRODUCTION METHOD OF COAL PITCH BASED MELT-BLOWN CARBON FIBERS ~71:JINING KENENG NEW CARBON MATERIAL TECHNOLOGY CO., LTD, JIBEI HIGH-TECH INDUSTRIAL PARK, People's Republic of China;SHANDONG CHENYANG NEW CARBON MATERIALS RESEARCH INSTITUTE CO., LTD, IN THE COURTYARD OF CHENYANG COMPANY, NEW MATERIALS INDUSTRIAL PARK, People's Republic of China ~72: FENG, Guangqiang;YAN, Guilin;YAN, Ping;YAO, Degang;YU, Ping;ZHANG, Haixia;ZHANG, Lin~ 33:CN ~31:2023105163343 ~32:09/05/2023

2023/09586 ~ Complete ~54:A SYSTEM FOR HIDING DATA IN BINARY IMAGES TO PROVIDE SECRET AND SECURE COMMUNICATION ~71:Dr. Bindu R. Garg, Bharati Vidyapeeth(Deemed to be University), College of Engineering, Dhankawadi, Pune, Maharashtra, 411043, India;Gyankamal J. Chhajed, Vidya Prathishthan’s Kamalnayan Bajaj Institute of Engineering and Technology , Baramati, Pune, Maharashtra, 413133, India;Jitendra B. Chhajed, Schreiber Dynamix Dairies Pvt. Ltd., E-94, MIDC, Bhigwan Road, Baramati, Dist. Pune, Maharashtra, 413133, India;Neha J. Chhajed, Vidya Prathishthan’s Kamalnayan Bajaj Institute of Engineering and Technology , Baramati, Pune, Maharashtra, 413133, India ~72: Dr. Bindu R. Garg;Gyankamal J. Chhajed;Jitendra B. Chhajed;Neha J. Chhajed~

2023/09588 ~ Complete ~54:FURAN FUSED RING SUBSTITUTED GLUTARIMIDE COMPOUND ~71:MEDSHINE DISCOVERY INC., Room 218, No. 9 Gaoxin Road, Jiangbei New District, Nanjing, People's Republic of China ~72: CHEN, Shuhui;LEI, Maoyi;LI, Junmiao~ 33:CN ~31:202110286500.6 ~32:17/03/2021;33:CN ~31:202110712765.8 ~32:25/06/2021;33:CN ~31:202111314330.4 ~32:08/11/2021;33:CN ~31:202210187905.9 ~32:28/02/2022

2023/09594 ~ Complete ~54:DEVICE FOR PROVIDING IOT SERVICE AND METHOD THEREFOR ~71:SAMSUNG ELECTRONICS CO., LTD., 129, Samsung-ro, Yeongtong-gu, Suwon-si, Gyeonggi-do, 16677, Republic of Korea ~72: JIHWA PARK;JONGHWAN KIM~ 33:KR ~31:10-2021-0034140 ~32:16/03/2021

2023/09600 ~ Complete ~54:VIRUS VACCINE ~71:BIONTECH SE, An der Goldgrube 12, 55131, Mainz, Germany ~72: ALEXANDER MUIK;UGUR SAHIN~ 33:EP ~31:PCT/EP2021/060273 ~32:20/04/2021

2023/09602 ~ Complete ~54:SELF-LEARNING METHOD FOR SEMANTIC FEATURE WITH MAXIMUM GAP, AND COMPUTER DEVICE AND STORAGE MEDIUM ~71:Foshan JMA Aluminium Industry Co., Ltd, No. 1, Xiaotang Nanhai Nonferrous Metals Industrial Park, Shishan Town, Nanhai District, FOSHAN 528000, GUANGDONG, CHINA (P.R.C.), People's Republic of China;Guangdong JMA Aluminum Profile Factory (Group) Co., Ltd, Fengchi Industrial Area, Dali Town, Nanhai District, FOSHAN 528200, GUANGDONG, CHINA (P.R.C.), People's Republic of China ~72: CAO, Yongqiang;HU, Taocheng;LEI, Yi;LIU, Huili;YE, Qing~ 33:CN ~31:202111273714.6 ~32:29/10/2021

2023/09605 ~ Complete ~54:SYSTEM FOR HANDLING A NACELLE OF A WIND TURBINE AND RELATED METHODS ~71:Nordex Energy Spain S.A.U., P.O. Box, POLÍGONO INDUSTRIAL BARASOAIN, PARCELA 2, BARASOAIN (NAVARRA) 31395, SPAIN, Spain ~72: ABOITIZ GARROGUERRICAECHEBARRIA, Idoia;ARRAZTOA MAGAÑA, Unai;GONZALEZ LAHERA, Iñaki;PALACIOS BURGOS, Luis~ 33:EP ~31:21383200.9 ~32:22/12/2021

2023/09603 ~ Complete ~54:NEW CONTRAST AGENT FOR USE IN MAGNETIC RESONANCE IMAGING ~71:Bayer Aktiengesellschaft, Kaiser-Wilhelm-Allee 1, LEVERKUSEN 51373, GERMANY, Germany ~72: BERGER, Markus;BRUMBY, Thomas;FRENZEL, Thomas;GREEN, Claudia;HERBERT, Simon Anthony;JOST, Gregor;LOHRKE, Jessica;PANKNIN, Olaf;PIETSCH, Hubertus;WITTROCK, Sven~ 33:EP ~31:21162650.2 ~32:15/03/2021

2023/09657 ~ Provisional ~54:SAFETY TOILET ~71:Heine Beukes, Lot 738 Woodgrange Drive, South Africa ~72: Heine Beukes~

2023/09575 ~ Provisional ~54:URBAN SMART LIGHTING SYSTEM ~71:ECO-SOLUTIONS PROJECTS MANAGEMENT (PTY) LTD., Suite 2, 3 Rydall Vale Park, 1 Douglas Saunders Drive, LA LUCIA 4051, KwaZulu-Natal Province, SOUTH AFRICA, South Africa ~72: CHETTY, Raju~

2023/09576 ~ Provisional ~54:RESISTANCE EXERCISE APPARATUS ~71:FORTUIN, Newton Buchanon, 12 Jonkershoek Street, Northpine, Brackenfell, South Africa;VAN NIEKERK, Johannes Hermanus, 70 Firmount Road, Briza Estate, South Africa ~72: FORTUIN, Newton Buchanon;VAN NIEKERK, Johannes Hermanus~

2023/09578 ~ Provisional ~54:A SPINAL FIXATION SYSTEM AND METHOD ~71:Southern Medical (Pty) Ltd, 55 Regency Drive, Route 21 Corporate Park, South Africa ~72: DE VILLIERS, MALAN~

2023/09582 ~ Complete ~54:VERTICAL TAKE-OFF AND LANDING AERIAL VEHICLE ~71:BROUGHTON, Benjamin, Albert, 7 VERRESIG ESTATE, 59 ELAND STREET, MOOIKLOOF, 0181, SOUTH AFRICA, South Africa;PADAYACHEE, Kreelan, 193 MUSTANG AVENUE, PIERRE VAN RYNEVELD, CENTURION, 0157, SOUTH AFRICA, South Africa ~72: BROUGHTON, Benjamin, Albert;PADAYACHEE, Kreelan~ 33:ZA ~31:2022/06598 ~32:15/07/2022

2023/09587 ~ Complete ~54:PRODUCING ETHYLENE BY OXIDATIVELY DEHYDROGENATING ETHANE ~71:LINDE GMBH, Dr.-Carl-von-Linde-Strasse 6-14, Germany ~72: MEISWINKEL, Andreas;SCHUBERT, Martin;ZELLHUBER, Mathieu~ 33:EP ~31:21162659.3 ~32:15/03/2021

2023/09591 ~ Complete ~54:BUOYANT OFFSHORE PLATFORM AND A METHOD OF DEPLOYING BUOYANT OFFSHORE PLATFORMS ~71:MARINE POWER SYSTEMS LIMITED, Unit 11, Clarion Court, Swansea Enterprise Park, Swansea, United Kingdom ~72: FOSTER, Graham~ 33:GB ~31:2106575.0 ~32:07/05/2021;33:GB ~31:2203820.2 ~32:18/03/2022

2023/09585 ~ Complete ~54:COMPOSITION AND METHOD FOR SYNTHESIZING ISONIAZID-PYRIDAZINONE BASED DPRE1 INHIBITORS AS ANTI-TUBERCULAR AGENTS ~71:Abida Ash Mohd, Department of Pharmaceutical Chemistry, College of Pharmacy, Northern Border University, Rafha 91911, Saudi Arabia;Mohd Imran, Department of Pharmaceutical Chemistry, College of Pharmacy, Northern Border University, Rafha 91911, Saudi Arabia;Northern Border University, College of Pharmacy, Northern Border University, Rafha 91911, Saudi Arabia;Noura Yousif Alnaser, College of Pharmacy, Northern Border University, Rafha 91911, Saudi Arabia;Shams Saud Altimyat, College of Pharmacy, Northern Border University, Rafha 91911, Saudi Arabia ~72: Abida Ash Mohd;Mohd Imran;Noura Yousif Alnaser;Shams Saud Altimyat~

2023/09612 ~ Complete ~54:CHIMERIC ANTIGEN RECEPTORS TO TARGET CD5-POSITIVE CANCERS ~71:Board of Regents, The University of Texas System, 210 West 7th St., AUSTIN 78701, TX, USA, United States of America ~72: ACHARYA, Sunil;BASAR, Rafet;DAHER, May;ENSLEY, Emily;MARIN COSTA, David;NUNEZ CORTES, Ana Karen;REZVANI, Katy;SHPALL, Elizabeth;UPRETY, Nadima~ 33:US ~31:63/174,990 ~32:14/04/2021

2023/09596 ~ Complete ~54:LUBRICATION SYSTEM ~71:SKF LUBRICATION SYSTEMS GERMANY GMBH, Heinrich-Hertz-Straße 2-8, 69190, Walldorf, Germany ~72: ANDREAS SCHOENFELD;DENNIS ZAHN;DIETER HESS;JÜRGEN KREUTZKÄMPER;MARKUS MANDERA;STEFAN SCHUERMANN~ 33:DE ~31:10 2021 204 617.7 ~32:06/05/2021

2023/09598 ~ Complete ~54:LUBRICATING SYSTEM ~71:SKF LUBRICATION SYSTEMS GERMANY GMBH, Heinrich-Hertz-Straße 2-8, 69190, Walldorf, Germany ~72: ANDREAS SCHOENFELD;DENNIS ZAHN;DIETER HESS;JÜRGEN KREUTZKÄMPER;MARKUS MANDERA;STEFAN SCHÜRMANN~ 33:DE ~31:10 2021 204 619.3 ~32:06/05/2021

2023/09606 ~ Complete ~54:POST-TENSIONING SYSTEM FOR A TOWER OF A WIND TURBINE, POST-TENSIONED TOWER OF A WIND TURBINE AND METHOD OF POST-TENSIONING A TOWER OF A WIND TURBINE ~71:Nordex Energy Spain S.A.U., POLIGONO INDUSTRIAL BARASOAIN, PARCELA 2, BARASOAIN 31395, (NAVARRA), SPAIN, Spain ~72: ARLABÁN GABEIRAS, Teresa;GARDUÑO ESTEBANEZ, Aitor;NÚÑEZ POLO, Miguel~ 33:EP ~31:21383234.8 ~32:29/12/2021

2023/09609 ~ Complete ~54:CANISTER STATUS DETERMINATION FOR NEGATIVE PRESSURE WOUND THERAPY DEVICES ~71:T.J.Smith and Nephew, Limited, PO Box 81, 101 Hessle Road, HULL HU3 2BN, UNITED KINGDOM, United Kingdom ~72: ASKEM, Ben Alan;ELDER, David Michael;GREGORY, Robert;GUARDIOLA, David Garcia;HUNT, Allan Kenneth Frazer Grugeon;MAGGIORE, Andrea;MILNER, Christopher James;QUINTANAR, Felix Clarence;STRACHAN, Kirsty Margaret~ 33:EP ~31:21382346.1 ~32:21/04/2021

2023/09614 ~ Complete ~54:SUPPORT ELEMENT FOR A SEGMENT OF WIND TURBINE TOWERS, SUPPORT SYSTEM COMPRISING AT LEAST A SUPPORT ELEMENT AND METHOD OF SUPPORTING AT LEAST A SEGMENT OF WIND TURBINE TOWERS ~71:Nordex Energy Spain, S.A.U., Polígono Industrial Barasoain Parcela 2, BARASOAIN 31395 , NAVARRA, SPAIN, Spain ~72: ARRAZTOA MAGAÑA, Unai;CERRILLO GÓMEZ, Vanessa~ 33:EP ~31:21383237.1 ~32:30/12/2021

2023/09617 ~ Complete ~54:NEW PYRAZOLO[1,5-A]PYRIMIDINE DERIVATIVES AS SIGMA LIGANDS ~71:ACONDICIONAMIENTO TARRASENSE, C/ DE LA INNOVACIÓ, 2, 08225 TERRASSA, Spain ~72: ALMANSA-ROSALES, Carmen;LORENTE-CRIVILLÉ, Adriana~ 33:EP ~31:21382324.8 ~32:16/04/2021

2023/09604 ~ Complete ~54:MOLD PART FOR MANUFACTURING TOOTHED VERTICAL JOINTS OF KEYSTONES AND MOLD COMPRISING THE MOLD PART ~71:Nordex Energy Spain S.A.U., P.O. Box, Polígono Industrial Barasoain Parcela 2, BARASOAIN (NAVARRA) 31395 , SPAIN, Spain ~72: CAMARERO TABLADO, David;CERRILLO GÓMEZ, Vanessa~ 33:EP ~31:21383212.4 ~32:23/12/2021

2023/09611 ~ Complete ~54:FN3 DOMAIN-SIRNA CONJUGATES AND USES THEREOF ~71:Aro Biotherapeutics Company, 601 Walnut Street, Suite 740, PHILADELPHIA 19106 , PA, USA, United States of America ~72: ADDIS, Russell C.;ANDERSON, Stephen J.;DRUZINA, Zhanna;KOLAKOWSKI, Robert V.;KULKARNI, Swapnil;NADLER, Steven G.;O'NEIL, Karyn T.;XIN, Yao~ 33:US ~31:63/174,776 ~32:14/04/2021;33:US ~31:63/203,776 ~32:30/07/2021;33:US ~31:63/324,437 ~32:28/03/2022

. - APPLIED ON 2023/10/16 -

2023/09641 ~ Complete ~54:ANALYTICAL HPLC ~71:GE Healthcare Limited, Pollards Wood Nightingales Lane, CHALFONT ST. GILES HP8 4SP, BUCKINGHAMSHIRE, UNITED KINGDOM, United Kingdom ~72: CLARKE, Alan;ENGELBRECHT, Hendrik Petrus;GRIGG, Julian;KHAN, Imtiaz Ahmed;MCROBBIE, Graeme;WIKENE, Kristine~ 33:GB ~31:2105950.6 ~32:26/04/2021

2023/09648 ~ Complete ~54:CSF PHOSPHORYLATED TAU AND AMYLOID BETA PROFILES AS BIOMARKERS OF TAUOPATHIES ~71:WASHINGTON UNIVERSITY, One Brookings Drive, St. Louis, Missouri, 63130, United States of America ~72: CHIHIRO SATO;NICOLAS BARTHELEMY;RANDALL BATEMAN~ 33:US ~31:63/169,193 ~32:31/03/2021

2023/09653 ~ Complete ~54:5XXX ALUMINIUM SHEETS FOR CAN MAKING ~71:CONSTELLIUM MUSCLE SHOALS LLC, 4805 Second Street, Muscle Shoals, Alabama, 35661, United States of America;CONSTELLIUM NEUF-BRISACH, Z.I.P. Rhénane Nord RD 52, 68600, Biesheim, France;CONSTELLIUM ROLLED PRODUCTS SINGEN GMBH & CO.KG, Alusingen-Platz 1, 78224, Singen, Germany ~72: ALIREZA ARBAB;GILLES GUIGLIONDA~ 33:FR ~31:FR2104673 ~32:04/05/2021

2023/09622 ~ Provisional ~54:INDUSTRIAL PRESSURE CLEANER ~71:CRONJE, Estelle, 64 Seventh Street, South Africa;FOURIE, Margarietha Maria Susanna, 61A Seventh Street, South Africa ~72: CRONJE, Pieter Francois Johannes;FOURIE, Hans Jurgens~

2023/09625 ~ Complete ~54:INTELLIGENT ROBOT CAPABLE OF CARRYING OUT SOIL OPERATION AND CONTROL METHOD THEREOF ~71:JILIN AGRICULTURAL UNIVERSITY, 2888 Xincheng Street, Nanguan District, Changchun City, Jilin Province, 130118, People's Republic of China ~72: MA Yunhai;REN Lili;SONG Wei;WANG Jingli;WANG Liyan~

2023/09631 ~ Complete ~54:COUPLING DEVICE BETWEEN A TEST BOX AND A COMPANION TEST BOX FOR BACK-TO-BACK PLANETARY TESTING ~71:NO.703 Research Institute of CSSC, No. 35, Honghu Road, Qunli Development Zone, Harbin City, People's Republic of China ~72: CHANG, Shan;FU, Lin;JIANG, Lidong~ 33:CN ~31:202310576308.X ~32:22/05/2023

2023/09649 ~ Complete ~54:THERAPEUTIC INTERFERING PARTICLES FOR CORONA VIRUS ~71:THE J. DAVID GLADSTONE INSTITUTES, A TESTAMENTARY TRUST ESTABLISHED UNDER THE WILL OF J. DAVID GLADSTONE, 1650 Owens Street, San Francisco, California, 94158, United States of America;VXBIOSCIENCES, INC., 1569 Solano Ave #281, Berkeley, California 94707, United States of America ~72: LEOR S WEINBERGER;ROBERT RODICK;SONALI CHATURVEDI~ 33:US ~31:PCT/US2021/028809 ~32:23/04/2021

2023/09652 ~ Complete ~54:HUMAN WASTE PROCESSING APPARATUS AND METHOD ~71:CRANFIELD UNIVERSITY, College Road Cranfield Bedfordshire, MK43 0AL, United Kingdom ~72: LEON MATTHEW WILLIAMS~ 33:GB ~31:2104942.4 ~32:07/04/2021

2023/09620 ~ Provisional ~54:FLUIDISING REACTOR WITH VARYING RADIAL DIAMETER, AND VARYING SLOPE AND CURVATURE OF THE REACTOR WALL ~71:Neil Stacey, 5 Mount Fletcher Road, South Africa ~72: Cameron Mudley;Joshua Jose;Neil Stacey~

2023/09621 ~ Provisional ~54:IEPS (INVERTER, EMERGENCY, POWER, SYSTEM ~71:Anton Kobus Dreyer, 52A van Warmelo Street, Hospital Park, South Africa ~72: Anton Kobus Dreyer~

2023/09627 ~ Complete ~54:PHARMACEUTICAL COMPOSITION FOR TREATING CHORONIC GASTRITIS AND A PREPARATION METHOD THEREOF ~71:Shaanxi University of Chinese Medicine, No. 1, Weiyang Middle Road, Qindu District, Xianyang, Shaanxi, People's Republic of China ~72: Fangfang Liu;Heng Mu;Jiehong Wang;Jinzhi You;Li Li;Lizhi Zhao;Yanyan Yang;Yongpan Xu;Zhihui Sha~ 33:CN ~31:202211317914.1 ~32:26/10/2022

2023/09629 ~ Complete ~54:SHEET FORMING SYSTEM AND METHOD ~71:SAFINTRA SOUTH AFRICA (PTY) LTD, 9 Old Main Road, Kloof, South Africa ~72: BENECKE, Marnitz;BIRCHAM, John;ESTERHUYSE, Hendrik;JACKSON, Justin;KOCH, Mark;PILLAY, Adrian~ 33:ZA ~31:2022/07863 ~32:15/07/2022

2023/09630 ~ Complete ~54:PREDICTIVE HEALTH AND PREVENTATIVE EMERGENCY MONITORING WEARABLE, SYSTEM AND METHOD ~71:ANVIL DARRON NEL, 60 Hazeldene Avenue, Scottsdene, Kraaifontein, Western Cape, 7570, South Africa ~72: ANVIL DARRON NEL~ 33:ZA ~31:2022/07862 ~32:15/07/2022

2023/09643 ~ Complete ~54:DOUBLE FIRING MODE SEMI-AUTOMATIC HANDGUN ~71:Gestamen Kutatás Fejlesztés Zrt., Jókai u. 14., CSONGRÁD 6640, HUNGARY, Hungary ~72: BOZÓ, Gábor~ 33:HU ~31:P2100110 ~32:17/03/2021

2023/09651 ~ Complete ~54:COMPOSITIONS AND METHODS FOR TREATMENT OF OCULAR DISEASE ASSOCIATED WITH ANGIOGENESIS ~71:4D MOLECULAR THERAPEUTICS INC., 5858 Horton Street, Suite 455, Emeryville, California, 94608, United States of America ~72: CHRISTIAN BURNS;MELISSA CALTON;MEREDITH LEONG;PAUL SZYMANSKI~ 33:US ~31:63/180,247 ~32:27/04/2021

2023/09623 ~ Provisional ~54:VERRI VENDOR SA ~71:Noluvuyo Zaca, 2542 unit BB, South Africa ~72: Noluvuyo Zaca~ 33:ZA ~31:1 ~32:01/10/2023

2023/09633 ~ Complete ~54:COMPOSITIONS AND METHODS FOR ENHANCING VISUAL FUNCTION ~71:NOVARTIS AG, Lichtstrasse 35, Switzerland ~72: GUERIN, Karen I;KOTIN, Robert M;PASTOR, Eric;REN, Xiaozhi;YOUNG, Sharon~ 33:US ~31:63/191,525 ~32:21/05/2021;33:US ~31:63/292,746 ~32:22/12/2021

2023/09634 ~ Complete ~54:METHOD FOR DIAGNOSING AND TREATING SUBJECTS HAVING SINGLE NUCLEOTIDE POLYMORPHISMS IN CHROMOSOME 2, 2:107,510,000-107,540,000 LOCUS ~71:NEURIM PHARMACEUTICALS (1991) LTD., 27 HaBarzel Street, Israel ~72: LAUDON, Moshe;ZISAPEL, Nava~ 33:US ~31:63/187,078 ~32:11/05/2021

2023/09638 ~ Complete ~54:PYRIMIDINE-FUSED CYCLIC COMPOUND, PREPARATION METHOD THEREFOR AND USE THEREOF ~71:Genfleet Therapeutics (Shanghai) Inc., Level 2/3/4/5, Suite 8, 1206 Zhangjiang Road, China (Shanghai) Pilot Free Trade Zone, Pudong New Area, SHANGHAI 201203, CHINA (P.R.C.), People's Republic of China;Zhejiang Genfleet Therapeutics Co., Ltd., 4th Floor, No.3 South Building, Medical Technology Industrial Park No. 1 Yunhai Road, Lihai Town, Shaoxing Binhai New City, 312000, ZHEJIANG, CHINA (P.R.C.), People's Republic of China ~72: CAI, Lijian;JIANG, Tao;LAN, Jiong;LU, Qiang;YAN, Feng;ZHANG, Leitao;ZHAO, Jichen;ZHOU, Fusheng~ 33:CN ~31:202110285465.6 ~32:17/03/2021

2023/09661 ~ Complete ~54:DEPOSIT AND EXCHANGE SYSTEM AND METHOD ~71:EMMANUEL MOKUTU, 1046 MOEFI STREET, MAPETLA, South Africa ~72: Emmanuel Mokutu~

2023/09635 ~ Complete ~54:A PINCH VALVE ASSEMBLY ~71:ECOPINCH PTY LTD, 28 Norfolk Avenue,, Australia ~72: MINERS, Adam;MINERS, Allan~ 33:AU ~31:2021901225 ~32:26/04/2021

2023/09636 ~ Complete ~54:INITIATION OF SMALL DATA TRANSMISSION ~71:NOKIA TECHNOLOGIES OY, KARAKAARI 7, 02610 ESPOO, FINLAND, Finland ~72: KOSKINEN, Jussi-Pekka;TURTINEN, Samuli, Heikki;WU, Chunli~

2023/09640 ~ Complete ~54:APPARATUS AND METHOD FOR CONTROLLING FLUSHING IN ROCK DRILLING ~71:Sandvik Mining and Construction Oy, Pihtisulunkatu 9, TAMPERE 33330, FINLAND, Finland ~72: ANTTONEN, Pekka;KIVELÄ, Tuomo;LAUNIS, Sirpa;SETÄLÄ, Timo~ 33:EP ~31:21171309.4 ~32:29/04/2021

2023/09628 ~ Complete ~54:A GAMING SYSTEM ~71:Habanero Systems Limited, Level G , (Office 1/1143) Quantum House, 75, Abate Rigord Street, Malta ~72: Nickolas IOANNOY~

2023/09639 ~ Complete ~54:PHARMACEUTICAL COMPOSITION, AND PREPARATION METHOD THEREFOR AND APPLICATION THEREOF ~71:Qilu Pharmaceutical Co., Ltd., No.317, Xinluo Street, High Technical Zone, JINAN 250100 , SHANDONG, CHINA (P.R.C.), People's Republic of China ~72: CHENG, Lizhen;GENG, Weifeng;YANG, Qingmin;ZHENG, Xiaoqing~ 33:CN ~31:202110757316.5 ~32:05/07/2021;33:CN ~31:202210660192.3 ~32:13/06/2022

2023/09642 ~ Complete ~54:OLIGOSACCHARIDE COMPOSITIONS HAVING SUCROSE-LIKE CHARACTERISTICS AND RELATED METHODS ~71:Cambridge Glycoscience Ltd, c/o The Cambridge

Partnership Limited, The Dorothy Hodgkin Building, Babraham Research Campus, Babraham, CAMBRIDGE CB22 3AT, UNITED KINGDOM, United Kingdom ~72: BARTOSIAK-JENTYS, Jeremy;SIMMONS, Thomas J.~ 33:US ~31:63/176,223 ~32:17/04/2021

2023/09646 ~ Complete ~54:PLANT FOR TREATING HORTICULTURAL PRODUCTS ~71:UNITEC S.P.A., Via Provinciale Cotignola, 20/9, 48022, Lugo, Italy ~72: LUCA BENEDETTI~ 33:IT ~31:102021000009185 ~32:13/04/2021

2023/09650 ~ Complete ~54:TRANSMEMBRANE PROTEASE, SERINE 6 (TMPRSS6) IRNA COMPOSITIONS AND METHODS OF USE THEREOF ~71:ALNYLAM PHARMACEUTICALS, INC., 675 West Kendall Street, Henri A. Termeer Square, Cambridge, Massachusetts, 02142, United States of America ~72: AIMEE M DEATON;BENJAMIN P GARFINKEL;JAMES D MCININCH;JOHN MICHAEL GANSNER;MARK K SCHLEGEL~ 33:US ~31:63/179,607 ~32:26/04/2021;33:US ~31:63/278,227 ~32:11/11/2021

2023/09654 ~ Complete ~54:IMPROVED FLOTATION AND SOLID-LIQUID SEPARATION OF TAILINGS ~71:EXTRAKT PROCESS SOLUTIONS, LLC, 140 Turner Ct., Bowling Green, Kentucky, 42101, United States of America ~72: CHRISTIAN KUJAWA;PAUL C PAINTER;WILLIAM R FLORMAN~ 33:US ~31:63/182,305 ~32:30/04/2021

2023/09624 ~ Provisional ~54:A SYSTEM AND METHOD FOR SECURE COMMUNICATION ~71:HEIMDALL (PTY) LTD, 32 Chanteclair Avenue, Onrus, South Africa ~72: HUXHAM, Horatio Nelson~

2023/09637 ~ Complete ~54:TCM GEL AND PREPARATION METHOD AND APPLICATION THEREOF ~71:WEST ANHUI UNIVERSITY, Moon Island, Yunlu Bridge West, Lu'an, Anhui, 237012, People's Republic of China ~72: DUAN, Ranbin;DUAN, Ranzheng;REN, Anni;SU, Ting~ 33:CN ~31:202310811875.9 ~32:04/07/2023

2023/09644 ~ Complete ~54:HEAT SOURCE SYSTEM OF HOT AIR FURNACE FOR MATCHING GRAIN DRYER ~71:ANHUI CHENYU MACHINERY TECHNOLOGY CO, LTD, Yinque Road, Economic and Technological Development Zone, Lu'an City, People's Republic of China ~72: DUAN Xianwu;YANG Jian;ZHU Huangfu~ 33:CN ~31:202210558700.7 ~32:20/05/2022

2023/09645 ~ Complete ~54:WALL FRAMING BRACKET AND ASSEMBLY ~71:ETEX AUSTRALIA PTY LTD, 31 Military Road, Matraville, New South Wales, 2036, Australia;ETEX BUILDING PERFORMANCE INTERNATIONAL SAS, 500 rue Marcel Demonque, Zone du Pôle Technologique Agroparc, 84915, Avignon, France ~72: BENJAMIN NEIL WRIGHT~ 33:AU ~31:2021202304 ~32:16/04/2021

2023/09647 ~ Complete ~54:TOPICAL ANAESTHETIC COMPOSITION HAVING IMPROVED VASOCONSTRICTOR STABILITY ~71:ANIMAL ETHICS PTY LTD, 363 Steels Creek Road Yarra Glen, Victoria 3775, Australia ~72: LAURIE BATT~ 33:AU ~31:2021203856 ~32:10/06/2021

2023/09655 ~ Complete ~54:SEMI-SUPERVISED FAULT DETECTION AND ANALYSIS METHOD FOR MECHANICAL EQUIPMENT, DEVICE, TERMINAL AND MEDIUM THEREOF ~71:SHENZHEN TECHNOLOGY UNIVERSITY, No. 3002 Lantian Road, Shijing Street, Pingshan District, Shenzhen, People's Republic of China ~72: CHEN, Fei;MA, Boquan;QU, Zege;XU, Binbin;YANG, Zheng;ZHOU, Xin~ 33:CN ~31:202210598529.2 ~32:30/05/2022

2023/09626 ~ Complete ~54:A KIND OF ANTI-BACTERIAL, ANTI-VIRAL AND ANTI-FOULING POLYURETHANE MATERIAL AND ITS PREPARATION METHOD AND APPLICATION ~71:Anhui Polytechnic University, Middle Beijing Road, Wuhu City, Anhui Province, 241000, People's Republic of China ~72: Jingchao WANG;Peng WANG;Qingbo XU;Zhenzhen XU~

2023/09632 ~ Complete ~54:A TARGET SPECIFIC EXOSOME BASED DELIVERY VEHICLE AND A BIO-FORMULATION TO OBTAIN THE SAME ~71:DUTTA, Abhishek, 47/1 Deshpran Sasmal Road, Snehakunj APT. BL-A, India;PAUL, Swastika, TG,2/14B, Tegharia, Kolupukur, Abhinandan Apartment Flat 2A, India ~72: DUTTA, Abhishek;PAUL, Swastika~ 33:IN ~31:202131059239 ~32:20/12/2021

. - APPLIED ON 2023/10/17 -

2023/09674 ~ Complete ~54:STRUCTURAL COLUMN PORT-DETACHABLE DEVICE ~71:CHINA CONSTRUCTION SECOND ENGINEERING BUREAU LTD., 251 Beiyangwa, Liyuan Town, Tongzhou District, Beijing, 101101, People's Republic of China ~72: JIN-ZE XIANG;LEI-SEN ZHU;LIN XIAO;SHI-MIN WANG;ZHEN-LIN ZHANG~ 33:CN ~31:202310915804.3 ~32:25/07/2023

2023/09676 ~ Complete ~54:METHOD AND SYSTEM FOR CONSTRUCTION OF HIGH FILL SUBGRADE IN MOUNTAINOUS AREA ~71:CHINA CONSTRUCTION SECOND ENGINEERING BUREAU LTD., 251 Beiyangwa, Liyuan Town, Tongzhou District, Beijing, 101101, People's Republic of China ~72: BO MA;JI-MING ZHANG;WEI LONG;XIAO-DONG FANG;XIN JIANG~ 33:CN ~31:202310963363.4 ~32:02/08/2023

2023/09679 ~ Complete ~54:19-NOR C3,3-DISUBSTITUTED C21 -N-PYRAZOLYL STEROID FOR USE IN TREATING MAJOR DEPRESSIVE DISORDER AND POSTPARTUM DEPRESSION ~71:SAGE THERAPEUTICS, INC., 215 First Street, Cambridge, United States of America ~72: ADIWIJAYA, Bambang, Senoaji;ARNOLD, Ryan;BONTHAPALLY, Vijayveer;COLQUHOUN, Helen, Anne;DOHERTY, James;DUNBAR, Joi, Lisa;GUNDUZ-BRUCE, Handan;JONAS, Jeffrey, Martin;KANES, Stephen, Jay;LASSER, Robert, Alfonso~ 33:US ~31:63/181,743 ~32:29/04/2021;33:US ~31:63/197,025 ~32:04/06/2021;33:US ~31:63/210,810 ~32:15/06/2021;33:US ~31:63/239,096 ~32:31/08/2021;33:US ~31:63/285,812 ~32:03/12/2021;33:US ~31:63/289,506 ~32:14/12/2021

2023/09689 ~ Complete ~54:METHODS OF MANUFACTURING A HIGH MOLECULAR WEIGHT HEPARIN COMPOUND ~71:NexEos Diagnostics, Inc., P.O. Box 1209, POTTSTOWN 19464 , PA, USA, United States of America ~72: FU, Li;PAX, Jessica;WANG, Zhenyu~ 33:US ~31:63/187,624 ~32:12/05/2021

2023/09672 ~ Complete ~54:RAPID FIELD-DEPLOYABLE DETECTION OF SARS-COV-2 VIRUS ~71:THE J. DAVID GLADSTONE INSTITUTES, A TESTAMENTARY TRUST ESTABLISHED UNDER THE WILL OF J. DAVID GLADSTONE, 1650 Owens Street, San Francisco, California, 94158, United States of America;THE REGENTS OF THE UNIVERSITY OF CALIFORNIA, 1111 Franklin Street 12th Floor, Oakland, California, 94607-5200, United States of America ~72: DANIEL A FLETCHER;DAVID SAVAGE;EMERIC CHARLES;GAGANDEEP RENUKA KUMAR;JENNIFER A DOUDNA;MELANIE OTT;NEIL SWITZ;PARINAZ FOZOUNI;SUNGMIN SON~ 33:US ~31:62/991,827 ~32:19/03/2020;33:US ~31:63/057,082 ~32:27/07/2020;33:US ~31:62/706,488 ~32:19/08/2020;33:US ~31:63/081,168 ~32:21/09/2020;33:US ~31:63/158,297 ~32:08/03/2021

2023/09681 ~ Complete ~54:FUNCTIONALIZED CELLULOSE, METHOD OF ENZYMATIC FUNCTIONALIZATION OF CELLULOSE, PROCESS OF ENZYMATIC FUNCTIONALIZATION OF CELLULOSE USING AN ORGANIC ACID AND PROCESS FOR THE PRODUCTION OF A CELLULOSE WITH INCREASED HYDROPHOBICITY AND ARTICLE ~71:Suzano S.A., Avenida Professor Magalhães Neto, Nº 1.752, 10º andar, salas 1010 e 1011, Pituba, SALVADOR - BA 41810-012, BRAZIL, Brazil;Universidade de São Paulo - USP, Rua da Reitoria, 374, Cidade Universitária Armando de Salles Oliveira, BUTANTÃ - SP 05508-220, BRAZIL, Brazil ~72: ARANTES, Valdeir;MAROTTI, Braz De Souza;SIQUEIRA, Germano~ 33:BR ~31:102021005126-4 ~32:18/03/2021

2023/09687 ~ Complete ~54:TASTE MASKED COMPOSTIONS OF 2,4,6-TRIFLUORO- N-[6-(1-METHYL-PIPERIDINE-4-CARBONYL)-PYRIDIN-2- YL]-BENZAMIDE HEMISUCCINATE, AND ORALLY DISENTEGRATING TABLET COMPRISING THE SAME ~71:Eli Lilly and Company, Lilly Corporate Center,

INDIANAPOLIS 46206-6288, IN, USA, United States of America ~72: ALLGEIER, Matthew Carl;BUTTERBAUGH, Adam Shane;TERNIK, Robert Louis~ 33:US ~31:63/185,554 ~32:07/05/2021

2023/09658 ~ Provisional ~54:REGIMONEY ~71:Dineo Marumo, 5 Elmar Steyn Circle, South Africa ~72: Dineo Marumo~

2023/09660 ~ Provisional ~54:METHOD OF PRODUCING A FLEXIBLE CONTAINER WITH BAFFLES ~71:Lionel Nicolas Mantzivis, no 1 villa Tosca, Valencia St Uitzicht, South Africa ~72: Lionel Nicolas Mantzivis~

2023/09664 ~ Complete ~54:INTELLIGENT COAL SEAM GAS EXTRACTION SYSTEM BASED ON PLC ~71:HULUNBUIR UNIVERSITY, No. 26 Genghis Khan Middle Road, Hailar District, Hulunbuir, Inner Mongolia Autonomous Region, People's Republic of China ~72: Li WANG~

2023/09669 ~ Complete ~54:A NOVEL MONASCIN COMPOUND, ITS PREPARATION METHOD, AND APPLICATION ~71:Leshan Normal University, No. 778, Bin He Road, Shizhong District, Leshan City, People's Republic of China ~72: Chen Fengzheng;Li Shuhua~ 33:CN ~31:202211267314.9 ~32:18/10/2022

2023/09673 ~ Complete ~54:DETACHABLY ASSEMBLED FACTORY BUILDING STEEL STRUCTURE ~71:CHINA CONSTRUCTION SECOND ENGINEERING BUREAU LTD., 251 Beiyangwa, Liyuan Town, Tongzhou District, Beijing, 101101, People's Republic of China ~72: BO QIAN;HENG-WEI ZHAO;RUI JIANG;ZHI YANG;ZHI-LEI WANG~ 33:CN ~31:202310856565.9 ~32:13/07/2023

2023/09684 ~ Complete ~54:ACCELERATED METHOD OF MAKING LYOPHILIZED PROTEIN FORMUALTIONS ~71:Amgen Inc., One Amgen Center Drive, THOUSAND OAKS 91320-1799, CA, USA, United States of America ~72: MCAULEY, Arnold;MCCORMICK, Jeff~ 33:US ~31:63/195,265 ~32:01/06/2021

2023/09692 ~ Complete ~54:VORUCICLIB DOSING REGIMENS AND METHODS OF TREATMENT INCLUDING THE SAME ~71:MEI PHARMA, INC., 3611 Valley Centre Drive Suite 500 , San Diego, California, 92130, United States of America ~72: ALAN F PARR;DANIEL GOLD~ 33:US ~31:63/173,361 ~32:10/04/2021;33:US ~31:63/173,398 ~32:10/04/2021

2023/09656 ~ Provisional ~54:ANIXI HEALTH PLATFORM FOR CHRONIC CONDITIONS GLOBAL COMMUNITIES ~71:Rabia Bi Bi Cozijn, 10 Kyalami Hills Estate, South Africa ~72: Rabia Bi Bi Cozijn~ 33:ZA ~31:1 ~32:16/10/2023

2023/09671 ~ Complete ~54:METHODS AND COMPOSITIONS FOR GENERATING CHONDROCYTE LINEAGE CELLS AND/OR CARTILAGE LIKE TISSUE ~71:UNIVERSITY HEALTH NETWORK, Technology Development and Commercialization MaRS Centre, Heritage Building, 101 College Street, Suite 150, Toronto, Ontario, M5G 1L7, Canada ~72: APRIL M CRAFT;GORDON KELLER~ 33:US ~31:61/809,050 ~32:05/04/2013

2023/09688 ~ Complete ~54:ANTIMICROBIAL AND ANTICANCER AGENTS ~71:Geistlich Pharma AG, Bahnhofstrasse 40, WOLHUSEN CH-6110, SWITZERLAND, Switzerland ~72: COSTIN, James C.;MOEHLER, Hanns;MUELLER, Thomas~ 33:US ~31:63/181,492 ~32:29/04/2021

2023/09695 ~ Complete ~54:SUB-MIB TRANSMISSION SCHEMES ~71:ZTE CORPORATION, ZTE Plaza, Keji Road South, Hi-Tech Industrial Park, Nanshan, Shenzhen, Guangdong, 518057, People's Republic of China ~72: BO DAI;HUIYING FANG;KUN LIU;LUANJIAN BIAN;YOUJUN HU~

2023/09667 ~ Complete ~54:FERMENTED LIQUID STARTER FEED FOR LAMBS DURING LACTATION AND PREPARATION METHOD AND APPLICATION THEREOF ~71:Xinjiang Agricultural University, 311 Nongda East Road, Sayibak District, Urumqi City, Xinjiang, 830052, People's Republic of China ~72: Changjiang

ZANG;Fengming LI;Jiancheng LIU;Kailun YANG;Kaixu CHEN;Mengjian LIU;Mireguli YIMAMU;Shabila SHADEKEJIANG~

2023/09675 ~ Complete ~54:FABRICATED REINFORCED CONCRETE FRAME-BENT STRUCTURE FOR FACTORY BUILDING ~71:CHINA CONSTRUCTION SECOND ENGINEERING BUREAU LTD., 251 Beiyangwa, Liyuan Town, Tongzhou District, Beijing, 101101, People's Republic of China ~72: HENG-WEI ZHAO;RUI JIANG;XIN GAO;YI-QING HUANG;ZHI-LEI WANG~ 33:CN ~31:202322197555.7 ~32:16/08/2023

2023/09683 ~ Complete ~54:ANTIGEN BINDING PROTEINS SPECIFICALLY BINDING PRAME ~71:Immatics Biotechnologies GmbH, Paul-Ehrlich-Straße 15, TÜBINGEN 72076, GERMANY, Germany ~72: BUNK, Sebastian;HOFMANN, Martin;HUTT, Meike;JAWORSKI, Maike;MAURER, Dominik;PSZOLLA, Gabriele;SCHUSTER, Heiko;SCHWÖBEL, Frank;SCHWÖRER, Florian;UNVERDORBEN, Felix;WAGNER, Claudia~ 33:EP ~31:21172351.5 ~32:05/05/2021;33:US ~31:63/184,689 ~32:05/05/2021

2023/09691 ~ Complete ~54:PYRIDO[3,2-D]PYRIMIDINE COMPOUNDS USES THEREOF FOR TREATING A PROLIFERATIVE DISEASE ~71:UNIVERSITÉ DE MONTREAL, 2900 Edouard Montpetit Boulevard, Montréal, Québec, H3T 1J4, Canada ~72: DORIS SCHUETZ;EMELINE BENOIT;ERIC BEAULIEU;HUGO LAVOIE;JACQUES BANVILLE;JOANNE TAN;MICHAEL DORE;MUKUND GHAVRE;PIERRE LOUIS BEAULIEU;SASMITA TRIPATHY;YANNICK ROSE~ 33:US ~31:63/201,219 ~32:19/04/2021

2023/09659 ~ Provisional ~54:AN UMBRELLA ANCHORING SYSTEM ~71:DU PLOOY, Nicolaas Jacobus, 117 De Beers Road, Strand, Cape Town 7140, SOUTH AFRICA, South Africa ~72: DU PLOOY, Nicolaas Jacobus~

2023/09662 ~ Complete ~54:AUTOMATIC DISPLACEMENT COAXIAL STRUCTURE FOR GIS THREE-STATION ISOLATION MECHANISM AND CONTROL METHOD THEREOF ~71:Beijing Qingchang Power Technology Co., Ltd, Room 1111, Block C, No.9 Shangdi 3rd street, Haidian District, Beijing, 100085, People's Republic of China;North China Electric Power University, Huilongguan, Changping District, Beijing, People's Republic of China ~72: Dongxiao Niu;Huanfen Zhang;Huatian Wang~

2023/09666 ~ Complete ~54:METHOD FOR CONSTRUCTING MOLECULAR MAP OF INTESTINAL BACTERIAL COMMUNITY OF BACTROCERA DORSALIS ~71:Institute of Microbiology, Jiangxi Academy of Sciences (Jiangxi Institute of Watershed Ecology), No. 7777 Changdong Avenue, Nanchang City, Jiangxi Province, 330096, People's Republic of China ~72: FU, Ming;WANG, Hongxiu;YANG, Chunhua;YANG, Jian;ZHANG, Hongyu;ZHANG, Zhihong~

2023/09677 ~ Complete ~54:A COMPOSITION AND METHOD FOR SYNTHESIS OF HERBAL MOSQUITO REPELLENTMAT/DHOOP ~71:Dr. Monali S. Patbage-Ghurde, Department of Botany Vidya Bharati Mahavidyalaya, Amravati, Maharashtra, India;Dr. Sampatrao Balkrishna Suryawanshi, Principal Someshwar Vidnyan Mahavidyalaya, Someshwar nagar, Pune,412306, Maharashtra, India;Dr. Sururchi R. Kadu, Brijlal Biyani Science College, Amravati, 444605, Maharashtra, India;Dr.Amrut Gunwantrao Gaddamwar, Amolkachand Mahavidyalaya, Godhani Road Yavatmal, 445001, Maharashtra, India ~72: Dr. Monali S. Patbage-Ghurde;Dr. Sampatrao Balkrishna Suryawanshi;Dr. Sururchi R. Kadu;Dr.Amrut Gunwantrao Gaddamwar~

2023/09682 ~ Complete ~54:PESTICIDAL MIXTURES ~71:Adama Makhteshim Ltd., P. O. Box 60, BEER SHEVA 8410001, ISRAEL, Israel ~72: BENETTI , Ernesto;FAURE MLYNSKI , Mariela;KESTECHER, Dor;KULKARNI, Pradeep;PENNA BETTARELLO , Carlos Bruno;TURATTI , Cristiane Stecca;UEBEL , Juliano~ 33:IN ~31:202131015784 ~32:02/04/2021;33:IN ~31:202131015786 ~32:02/04/2021;33:IN ~31:202111028811 ~32:26/06/2021

2023/09686 ~ Complete ~54:DOSING REGIMEN FOR COMBINATION THERAPY TARGETING DLL3 AND PD-1 ~71:Amgen Inc., c/o Amgen Inc., One Amgen Center Drive, THOUSAND OAKS 91320-1799, CA, USA, United

States of America ~72: MINOCHA, Mukul;ROYCHOUDHURY, Siddhartha;SADRAEI, Nooshin Hashemi;SHETTY, Aditya;SMIT, Marie-Ann Damiette;WONG, Hansen~ 33:US ~31:63/186,569 ~32:10/05/2021

2023/09693 ~ Complete ~54:DECARBONATION PROCESS OF CARBONATED MATERIALS IN A MULTI-SHAFT VERTICAL KILN ~71:TECFORLIME, Bld de Lauzelle 65, 1348, Louvain-La-Neuve, Belgium ~72: ALEX AUBERT;CHARLES ROBIN;ETIENNE THIBEAUMONT;PIERRE-OLIVIER CAMBIER~ 33:EP ~31:21173257.3 ~32:11/05/2021;33:EP ~31:21173263.1 ~32:11/05/2021;33:EP ~31:21197037.1 ~32:16/09/2021;33:EP ~31:21197039.7 ~32:16/09/2021;33:EP ~31:21214128.7 ~32:13/12/2021

2023/09665 ~ Complete ~54:OXIDIZED ALGINATE/POLYACRYLAMIDE/CHITOSAN MEDICAL COMPOSITE HOMOGENEOUS SCAFFOLD MATERIAL AND PREPARATION METHOD THEREOF ~71:HAINAN NORMAL UNIVERSITY, No. 99 Longkun South Road, Haikou City, Hainan Province, 571100, People's Republic of China ~72: BU Yanan;CHEN Xiuqiong;LIN Qiang;WANG Hongcai;WU Ting;YAN Huiqiong~

2023/09670 ~ Complete ~54:SECURITY PROTOCOL SYSTEM AND METHOD ~71:HEIMDALL (PTY) LTD, 32 Chanteclair Avenue, Onrus, South Africa;MOELLER, Christoph, Wilbergstrasse 31, Germany ~72: HUXHAM, Horatio Nelson~ 33:ZA ~31:2022/11368 ~32:18/10/2022;33:ZA ~31:2023/09624 ~32:16/10/2023

2023/09680 ~ Complete ~54:GOLEXANOLONE FOR USE IN THE TREATMENT OF FATIGUE OR COGNITIVE IMPAIRMENT IN LIVER DISEASE PATIENTS ~71:Umecrine Cognition AB, Fogdevreten 2, SOLNA 171 65, SWEDEN, Sweden ~72: ÖHMAN, Lars;DOVERSKOG, Magnus;JOHANSSON, Maja;JONES, David~ 33:EP ~31:21169388.2 ~32:20/04/2021

2023/09694 ~ Complete ~54:PLANTS OF THE SPECIES BETA VULGARIS WITH RESISTANCE TO CERCOSPORA ~71:BEJO ZADEN B.V., Trambaan 1, 1749, CZ Warmenhuizen, Netherlands ~72: ALBERTUS JOHANNES MARIA SCHRIJVER;DORA LISA MOITA E COELHO;JACOB VAN DORP;ROSALINE ANNA MARIA JONG~

2023/09696 ~ Provisional ~54:METHOD OF PRODUCING A NO-ADDED SUGAR, NO-COOK FRUIT/VEGETABLE/PLANT SPREAD/CONDIMENT ~71:ANDRE STRYDOM, 22 DENNEKAMP, 359 MAIN RD, South Africa ~72: ANDRE STRYDOM~ 33:ZA ~31:1028548 ~32:16/10/2023

2023/09663 ~ Complete ~54:RIVER WATER ECOLOGICAL HEALTH MONITORING SYSTEM AND METHOD, DEVICE, AND MEDIUM ~71:Beijing Normal University, No. 19, Xinjiekou Outer Street, Beijing, 100875, People's Republic of China ~72: GAO, Ju;LI, Chunhui;LIU, Qiang;WANG, Xuan;YI, Yujun~ 33:CN ~31:2023111818766 ~32:13/09/2023

2023/09668 ~ Complete ~54:SPECIFIC PRIMERS AND PROBES FOR IDENTIFYING COMPONENTS DERIVED FROM ROSA ROXBURGHII ~71:Chinese Academy of Inspection and Quarantine, No. 11, Ronghua South Road, Daxing Yizhuang Economic and Technological Development Zone, Beijing, 100176, People's Republic of China ~72: LI Mingfu;REN Yongchao;SONG Yun;XU Jin;ZHAI Junfeng;ZHANG Mingzhe;ZHANG Yongjiang~

2023/09678 ~ Complete ~54:ASH ACOUSTIC CLEANING DEVICE FOR SCR DENITRATION CATALYST IN COAL-FIRED POWER PLANT ~71:CHANGSHA UNIVERSITY OF SCIENCE AND TECHNOLOGY, No. 960, SEC. 2, Wanjiali South Road, Yuhua District, Changsha City, People's Republic of China;NATIONAL ENERGY ZHIJIN POWER GENERATION CO., LTD, Guoneng Zhijin Power Generation Co., Ltd, Eight Bu Street, Zhijin County, Bijie City, People's Republic of China;SHAANXI DAI NAN NEW ENERGY ENGINEERING CO., LTD, Room 901-3, Building D, Wangdu, Jinye Road, High-tech Zone, Xi 'an, People's Republic of China ~72: CHENG, Libo;LU, Jinwen;MA, Dingbo;QIN, Rongjiang;QIU, Hongbao;WANG, Maosheng;YANG, Yanfeng;ZHAO, Yi~

2023/09685 ~ Complete ~54:CD20 AND CD22 TARGETING ANTIGEN-BINDING MOLECULES FOR USE IN PROLIFERATIVE DISEASES ~71:Amgen Research (Munich) GmbH, Staffelseestrasse 2, MUNICH 81477, GERMANY, Germany ~72: DEISTING, Wibke;GAEDTKE, Lars;HONER, Jonas;PANZER, Marc;RAU, Doris;RAUM, Tobias;WINKEL, Lisa~ 33:US ~31:63/201,634 ~32:06/05/2021

2023/09690 ~ Complete ~54:TARGETED THERAPIES IN CANCER ~71:ONCXERNA THERAPEUTICS, INC., 300 Fifth Avenue, Suite 6040, United States of America ~72: BENJAMIN, Laura E.;CVITKOVIČ, Robert;ROSENGARTEN, Rafael;STRAND-TIBBITTS, Kristen;ŠTAJDOHAR, Miha~ 33:US ~31:63/166,167 ~32:25/03/2021;33:US ~31:63/188,321 ~32:13/05/2021

2023/09743 ~ Provisional ~54:JALUSI SME PROCUREMENT PORTAL ~71:Thandiwe Shema, 29 Karen Road,, South Africa ~72: Thandiwe Shema~

. - APPLIED ON 2023/10/18 -

2023/09697 ~ Provisional ~54:A CONVERTIBLE TROLLEY ~71:MATJILA, Mokhine, John, Matthews, 25 Amandelboom Street, Extension 4 Zwartkop, Centurion, 0157, South Africa ~72: MATJILA, Mokhine, John, Matthews~

2023/09703 ~ Complete ~54:SYSTEM FOR REMOTE TEACHING OR CONSULTATION OF VASCULAR INTERVENTIONAL OPERATION ~71:THE AFFILIATED HOSPITAL OF GUIZHOU MEDICAL UNIVERSITY, No. 28, Guiyi Street, Yunyan District, Guiyang City, Guizhou Province, 550025, People's Republic of China ~72: CHEN, Zhu;CUI, Junshuan;FENG, Xiaoyun;HE, Longcai;LIU, Xianqi;LU, Junling;MING, Jiang;SONG, Wenxue;WANG, Xiang;WU, Zeya;XIANG, Xin;XU, Kaya;YANG, Hua;ZENG, Xi;ZHOU, Xingwang~

2023/09711 ~ Complete ~54:COMPOSITIONS HAVING IMPROVED BIOAVAILABILITY OF THERAPEUTICS ~71:TRX BIOSCIENCES LIMITED, THE WALBROOK BUILDING, 25 WALBROOK, LONDON EC4N 8AF, UNITED KINGDOM, United Kingdom ~72: BANNISTER, Robin, M.;BREW, John;GOODING, Daniel~ 33:US ~31:63/166,995 ~32:27/03/2021;33:US ~31:63/269,330 ~32:14/03/2022

2023/09715 ~ Complete ~54:A SCHOOL BADGE WITH MOTION TRACKING FUNCTIONALITY ~71:Chongqing University of Education, No. 1, Chongjiao Road, Nanshan Street, Nan’an District, Chongqing City, 400065, People's Republic of China ~72: Yong Sui~

2023/09728 ~ Complete ~54:METHOD FOR PRODUCING CULTURE CELLS REQUIRING A SUPPLY OF FERRIC IRON ~71:ERYPHARM, 27 rue de Chaligny, 75012, Paris, France ~72: FLORENT MATHIEU;GUILLAUME ROUSSEAU;MARIE-CATHERINE GIARRATANA~ 33:FR ~31:FR2102786 ~32:19/03/2021

2023/09731 ~ Complete ~54:PPO POLYPEPTIDES TOLERANT TO PPO-INHIBITING HERBICIDES AND USE THEREOF ~71:QINGDAO KINGAGROOT CHEMICAL COMPOUND CO., LTD., No.53, Qinglonghe Road, Huangdao District, Qingdao, Shandong, 266000, People's Republic of China ~72: BO CHEN;GUIZHI LIU;LEI WANG;QIQI HOU;SUDONG MO~ 33:CN ~31:202110361141.6 ~32:02/04/2021;33:CN ~31:202210136187.2 ~32:15/02/2022

2023/09708 ~ Complete ~54:METHOD FOR PREPARING ENANTIOMERICALLY ENRICHED 2-[2-(2-CHLOROTHIAZOL-5-YL)-2-HYDROXY-ETHYL]SULFANYL-6-HYDROXY-3-METHYL-5-PHENYL-PYRIMIDIN-4-ONE BY HYDROGENATION OF THE 2-OXO DERIVATIVE IN THE PRESENCE OF A CHIRAL TRANSITION METAL CATALYST ~71:BASF SE, CARL BOSCH STRASSE 38, 67056 LUDWIGSHAFEN AM RHEIN, GERMANY, Germany ~72: GOETZ, Roland;KADUSKAR, Rahul;KORADIN, Christopher;MCLAUGHLIN, Martin, John;SHINDE, Harish~ 33:EP ~31:21164908.2 ~32:25/03/2021

2023/09712 ~ Complete ~54:PHARMACEUTICAL COMBINATIONS FOR TREATING CANCER ~71:T3 PHARMACEUTICALS AG, HEGENHEIMERMATTWEG 167A, 4123 ALLSCHWIL, SWITZERLAND, Switzerland ~72: AMSTUTZ, Marlise;DUVAL, Mélodie;ITTIG, Simon;KASPER, Christoph;SAUPE, Falk~ 33:EP ~31:21164882.9 ~32:25/03/2021

2023/09716 ~ Complete ~54:TASIPIMIDINE FORMULATIONS AND USE THEREOF ~71:Orion Corporation, Orionintie 1, ESPOO FI-02200, FINLAND, Finland ~72: KUJALA, Johanna;LEHTISALO, Jenni;SALMIA, Jukka;SINERVO, Kai~ 33:FI ~31:20215311 ~32:19/03/2021

2023/09723 ~ Complete ~54:HIGH-EFFICIENT TANK-TYPE HEAT EXCHANGER WITH OIL RETURN FUNCTION FOR HEAT PUMP UNIT ~71:MAANSHAN NBWAVE THERMAL ENERGY TECHNOLOGY CO., LTD, No.1166, Bijiashan Road, Huashan Industrial Estate, Maanshan, Anhui, 243099, People's Republic of China ~72: Shifeng,Yan~ 33:CN ~31:202210978493.0 ~32:16/08/2022

2023/09734 ~ Complete ~54:METHODS FOR INHIBITING RAS ~71:REVOLUTION MEDICINES, INC., 700 Saginaw Drive, Redwood City, California, 94063, United States of America;THE GENERAL HOSPITAL CORPORATION, 55 Fruit Street, Boston, Massachusetts, 02114, United States of America ~72: ROBERT J NICHOLS;RYAN B CORCORAN~ 33:US ~31:63/170,292 ~32:02/04/2021;33:US ~31:63/192,843 ~32:25/05/2021

2023/09730 ~ Complete ~54:TOOTH FORMATION AND TOOTH PICK FORMATION ~71:MMD GROUP LIMITED, The House of Sizers, The Promenade Laxey, IM4 7DB, United Kingdom ~72: CHRISTOPHER PEARSON~ 33:GB ~31:2107129.5 ~32:19/05/2021

2023/09736 ~ Complete ~54:COMPOSITION ~71:UNILEVER GLOBAL IP LIMITED, Port Sunlight, Wirral, Merseyside, CH62 4ZD, United Kingdom ~72: CHUNHUI BAO;JUN SHEN;QIN YIN~ 33:CN ~31:PCT/CN2021/093363 ~32:12/05/2021;33:EP ~31:21181559.2 ~32:24/06/2021

2023/09738 ~ Complete ~54:PACKAGE CONTAINING WATER-SOLUBLE CAPSULES ~71:UNILEVER GLOBAL IP LIMITED, Port Sunlight, Wirral, Merseyside, CH62 4ZD, United Kingdom ~72: KIERAN DEAN OWENS;ROSS DAVID ASHTON~ 33:EP ~31:21173810.9 ~32:14/05/2021

2023/09698 ~ Provisional ~54:RAZOR WIRE ~71:COCHRANE INDUSTRIES UK LIMITED, 132 Hartlebury Trading Estate, Hartlebury, United Kingdom ~72: BUCARIZZA, Vlado~

2023/09702 ~ Complete ~54:PREPARATION METHOD FOR FROZEN NAAN DOUGH ~71:Institute of Agro-Products Storage and Processing, Xinjiang Academy of Agricultural Sciences, No. 403 Nanchang Road, Saybagh District, Urumqi City, Xinjiang Uygur Autonomous Region, 830000, People's Republic of China ~72: KANG, Feng;MENG, Xintao;XIAO, Li;ZHANG, Ping;ZHANG, Qian;ZHANG, Ting;ZHAO, Zhixia;ZOU, Shuping~

2023/09704 ~ Complete ~54:CRAWLER CHASSIS DEVICE ~71:Jinhua Polytechnic, No. 1188, Wuzhou Street, Wucheng District, Jinhua City, Zhejiang Province, 321000, People's Republic of China ~72: DING, Zhao;SU, Zhan;TIAN, Liquan;WANG, Zhiming;XIONG, Yongsen~

2023/09710 ~ Complete ~54:METHOD FOR MANUFACTURING METAL FIBERS, MORE PARTICULARLY STEEL FIBERS ~71:HACANOKA GMBH, PFÄLZER STRAßE 14, 89269 VÖHRINGEN, GERMANY, Germany ~72: STAHL, Hansjörg;STAHL, Karl-Hermann~ 33:DE ~31:10 2021 001 946.6 ~32:14/04/2021

2023/09714 ~ Complete ~54:AN INSULATING PROTECTIVE BOX FOR ELECTRICAL EQUIPMENT ~71:Anhui Lutai Electric Technology Co., Ltd., No.12401, Haixinsha Building, Pihe Road, Jin'an District, Lu'an City, Anhui Province, 237010, People's Republic of China ~72: Yanxue Zhang~

2023/09719 ~ Complete ~54:MINE HOIST MONITORING SYSTEM ~71:ABB Schweiz AG, Bruggerstrasse 66, BADEN 5400, SWITZERLAND, Switzerland ~72: DAVIS, Mike;KEEN, Stephen;KENT-RODGMAN, Christopher;MARTIN, Sean~

2023/09727 ~ Complete ~54:PROCESS FOR PREPARING A SPRAY DRIED DETERGENT PARTICLE ~71:UNILEVER GLOBAL IP LIMITED, Port Sunlight, Wirral, Merseyside, CH62 4ZD, United Kingdom ~72: ABRAHAM CHACKO;GIRISH KUMAR;KUNAL SHANKAR PAWAR;NADEEM SHAIKH;SATYENDRA PRASAD SINGH;SHARAVAN KUMAR~ 33:EP ~31:21174569.0 ~32:19/05/2021

2023/09733 ~ Complete ~54:THIONUCLEOSIDES AS ANTIVIRAL AGENTS ~71:EMORY UNIVERSITY, 1599 Clifton Road, NE 4th Floor, Atlanta, Georgia, 30322, United States of America ~72: FRANCK AMBLARD;KEIVAN ZANDI;RAYMOND SCHINAZI;ZHE CHEN~ 33:US ~31:63/173,354 ~32:09/04/2021;33:US ~31:63/175,673 ~32:16/04/2021;33:US ~31:63/210,246 ~32:14/06/2021;33:US ~31:63/288,163 ~32:10/12/2021;33:US ~31:63/298,836 ~32:12/01/2022

2023/09717 ~ Complete ~54:TASIPIMIDINE FORMULATIONS AND USE THEREOF ~71:Orion Corporation, Orionintie 1, ESPOO 02200, FINLAND, Finland ~72: KUJALA, Johanna;LEHTISALO, Jenni;SALMIA, Jukka;SINERVO, Kai~ 33:FI ~31:20215311 ~32:19/03/2021

2023/09729 ~ Complete ~54:PROCESS FOR PREPARING A SPRAY DRIED DETERGENT PARTICLE ~71:UNILEVER GLOBAL IP LIMITED, Port Sunlight, Wirral, Merseyside, CH62 4ZD, United Kingdom ~72: ABRAHAM CHACKO;GIRISH KUMAR;KUNAL SHANKAR PAWAR;NADEEM SHAIKH;SHARAVAN KUMAR~ 33:EP ~31:21174577.3 ~32:19/05/2021

2023/09737 ~ Complete ~54:IMPROVED CATALYTIC REACTOR SYSTEM AND CATALYST FOR CONVERSION OF CAPTURED CO2 AND RENEWABLE H2 INTO LOW-CARBON SYNGAS ~71:INFINIUM TECHNOLOGY, LLC, 2020 L Street, Suite 120 Sacramento, California 95811-4260, United States of America ~72: DENNIS SCHUETZLE;GLENN MCGINNIS;MATTHEW CALDWELL;ORION HANBURY;RAMER RODRIGUEZ;ROBERT SCHUETZLE~ 33:US ~31:17/300,261 ~32:03/05/2021

2023/09721 ~ Complete ~54:THERAPEUTIC DRUG FOR MYOTONIC DYSTROPHY TYPE 1 ~71:EditForce, Inc., 1-9-17, Tenjin, Chuo-ku, FUKUOKA-SHI 8100001, FUKUOKA, JAPAN, Japan ~72: IMAI , Takayoshi;NAKAMORI, Masayuki;NINOMIYA, Risa;OKII, Erika;TAMAI , Takayuki;YAGI , Yusuke~ 33:JP ~31:2021-077262 ~32:30/04/2021

2023/09724 ~ Complete ~54:COEFFICIENT ENCODING/DECODING METHOD, ENCODER, DECODER, AND COMPUTER STORAGE MEDIUM ~71:GUANGDONG OPPO MOBILE TELECOMMUNICATIONS CORP., LTD., No. 18, Haibin Road, Wusha, Chang'an, Dongguan, Guangdong 523860, People's Republic of China ~72: FAN WANG;ZHIHUANG XIE~

2023/09726 ~ Complete ~54:PROCESS FOR PREPARING A SPRAY DRIED DETERGENT PARTICLE ~71:UNILEVER GLOBAL IP LIMITED, Port Sunlight, Wirral, Merseyside, CH62 4ZD, United Kingdom ~72: ABRAHAM CHACKO;GIRISH KUMAR;KUNAL SHANKAR PAWAR;NADEEM SHAIKH;SHARAVAN KUMAR~ 33:EP ~31:21174575.7 ~32:19/05/2021

2023/09732 ~ Complete ~54:NUCLEOSIDES AND NUCLEOTIDES ANALOGS AS ANTIVIRAL AGENTS ~71:EMORY UNIVERSITY, 1599 Clifton Road, NE 4th Floor, Atlanta, Georgia, 30322, United States of America

~72: FRANCK AMBLARD;JUNXING SHI;KEIVAN ZANDI;LONGHU ZHOU;MAHESH KASTHURI;NICOLAS BITEAU;RAYMOND SCHINAZI~ 33:US ~31:63/173,354 ~32:09/04/2021;33:US ~31:63/175,673 ~32:16/04/2021;33:US ~31:63/210,246 ~32:14/06/2021;33:US ~31:63/288,163 ~32:10/12/2021;33:US ~31:63/298,836 ~32:12/01/2022

2023/09701 ~ Provisional ~54:A SECURITY SOLUTION FOR GATED COMMUNITIES ~71:Jenwick (Pty) Ltd T/A KhaZin Enterprises, 136 Penny Way, Glenwood Village, Lynwood, South Africa ~72: Reginald Sydney Helwick (ID No. 4308255031083)~

2023/09707 ~ Complete ~54:SECURITY PANEL ~71:WIID, Louis August, 30 Flamboyant Street, Wilkoppies, South Africa ~72: WIID, Louis August~

2023/09718 ~ Complete ~54:METHOD FOR PRODUCING FLOAT GLASS FROM UNPROCESSED MINERAL MATERIALS ~71:Saint-Gobain Glass France, Tour Saint-Gobain, 12 Place de l'Iris, COURBEVOIE 92400, FRANCE, France ~72: CINTORA GONZALEZ, Octavio;COCHARD, Jean-Patrick;DI PIERRO, Simonpietro~ 33:FR ~31:2104436 ~32:28/04/2021

2023/09699 ~ Provisional ~54:FENCE POST ~71:COCHRANE STEEL PRODUCTS (PTY) LTD, 125 Fitter Road, Spartan, South Africa ~72: COCHRANE, Richard Bruce~

2023/09706 ~ Complete ~54:LINEAR ENGINE OPERATION ~71:MARCUS, Dean Shane, 65 Serenade Road, Elandsfontein, South Africa;MARCUS, Stanley, 65 Serenade Road, Elandsfontein, South Africa ~72: MARCUS, Dean Shane;MARCUS, Stanley~ 33:ZA ~31:2022/11014 ~32:10/10/2022

2023/09700 ~ Provisional ~54:A SECURITY SOLUTION FOR GATED COMMUNITIES ~71:Jenwick (Pty) Ltd T/A KhaZin Enterprises, 136 Penny Way, Glenwood Village, Lynwood, South Africa ~72: Reginald Sydney Helwick (ID No. 4308255031083)~

2023/09705 ~ Complete ~54:COVER TENSIONING APPARATUS AND COVER MOUNTING SYSTEM FOR A VEHICLE BODY ~71:VALUE LOGISTICS (PTY) LTD, 49 Brewery Road, Isando, South Africa ~72: COULSON, Richard;MARAIS, Daniel Christoffel;WILLEM, Jacobus Steyn~ 33:ZA ~31:2022/10861 ~32:03/10/2022

2023/09709 ~ Complete ~54:METHOD AND APPARATUS FOR HANDLING COLLISION ~71:TELEFONAKTIEBOLAGET LM ERICSSON (PUBL), SE-164 83 STOCKHOLM, SWEDEN, Sweden ~72: LIN, Zhipeng;SU, Ling~ 33:CN ~31:PCT/CN2021/082489 ~32:23/03/2021

2023/09713 ~ Complete ~54:PHARMACEUTICAL FORMULATIONS ~71:SPEPHARM AG, Werftestrasse 3, Switzerland ~72: EDWARDS, Luke;MENCUCCINI, Lorenzo;SAUNDERS, Susanna;SMITH, Samuel~ 33:GB ~31:2106497.7 ~32:06/05/2021;33:GB ~31:2112820.2 ~32:08/09/2021

2023/09720 ~ Complete ~54:COMPOSITIONS ~71:Givaudan SA, Chemin de la Parfumerie 5, VERNIER 1214, SWITZERLAND, Switzerland ~72: ANTONI, Gaetan;CALAFAT, Stéphanie;FANÇA-BERTHON, Pascale Elizabeth Renée;HEBERT, Yoann;LECOZANNET, Romain;NAVARRO, Rosa;RANZINI, Cristina Maria~ 33:US ~31:63/182,551 ~32:30/04/2021

2023/09722 ~ Complete ~54:METHOD FOR UPDATING A DATABASE OF A GEOLOCATION SERVER ~71:UnaBiz, 425, rue Jean Rostand, LABEGE 31670, FRANCE, France ~72: BOITE, Julien;CHEVALLIER, Robert;ISSON, Olivier;MARTY, Renaud;TREGARO, Maxime;ZUNIGA, Juan Carlos~ 33:FR ~31:2104083 ~32:20/04/2021

2023/09725 ~ Complete ~54:PESTICIDAL GENES AND METHODS OF USE ~71:AGBIOME, INC., P.O. Box 14069, Durham, North Carolina, 27709, United States of America ~72: FRANCOIS TORNEY;JESSICA PARKS;REBECCA E THAYER;REBEKAH DETER KELLY~ 33:US ~31:63/185,123 ~32:06/05/2021

2023/09735 ~ Complete ~54:COMPOSITION ~71:UNILEVER GLOBAL IP LIMITED, Port Sunlight, Wirral, Merseyside, CH62 4ZD, United Kingdom ~72: CHUNHUI BAO;QIN YIN~ 33:CN ~31:PCT/CN2021/093361 ~32:12/05/2021;33:EP ~31:21181575.8 ~32:24/06/2021

2023/09739 ~ Complete ~54:METHOD AND SYSTEM FOR BIOHYDROGEN ALKANE CO-PRODUCING FERMENTATION WITH NEGATIVE CARBONACEOUS EMISSIONS ~71:HENAN AGRICULTURAL UNIVERSITY, No.95, Wenhua Road, Jinshui District, Zheng zhou, People's Republic of China ~72: JIANG, Danping;JING, Yanyan;LI, Yameng;LU, Chaoyang;YUE, Jianzhi;ZHANG, Huan;ZHANG, Quanguo;ZHANG, Tian;ZHANG, Yang;ZHANG, Zhiping~ 33:CN ~31:202111375268.X ~32:19/11/2021

. - APPLIED ON 2023/10/19 -

2023/09754 ~ Complete ~54:A DETACHABLE SMART CONTAINER ~71:ETO MOTORS PVT LTD., 5th Floor, Block - II, My Home Hub, Hitec City, India;KETO MOTORS PVT. LTD., 9-1-83 & 84, Amarchand Sharma Complex, S. D. Road, India ~72: MEDIMI, Raj Kumar~ 33:IN ~31:202241054469 ~32:23/10/2022

2023/09772 ~ Complete ~54:TITANIA BASED GENERATORS FOR AC-225 GENERATION ~71:TERRAPOWER, LLC, 15800 Northup Way, Bellevue, Washington, 98008, United States of America ~72: CHRISTOPHER P DUNCKLEY;KEN CZERWINSKI;PYOUNGCHUNG KIM;RUSSELL LUDWIG;SAYANDEV CHATTERJEE;VLADISLAV P VLASENKO;ZUOLEI LIAO~ 33:US ~31:63/177,037 ~32:20/04/2021;33:US ~31:63/284,941 ~32:01/12/2021

2023/09780 ~ Complete ~54:HYPOIMMUNOGENIC CELLS COMPRISING ENGINEERED HLA-E OR HLA-G ~71:SANA BIOTECHNOLOGY, INC., 188 East Blaine Street, Suite 400, Seattle, Washington, 98102, United States of America ~72: EDWARD REBAR;SONJA SCHREPFER~ 33:US ~31:63/194,106 ~32:27/05/2021;33:US ~31:63/255,912 ~32:14/10/2021

2023/09749 ~ Complete ~54:AN AUTOMATED GEAR SHIFTING SYSTEM FOR BICYCLES ~71:VISHWAKARMA INSTITUTE OF TECHNOLOGY, 666, UPPER MARKET RD, UPPER INDIRA NAGAR, BIBWEWADI, PUNE, MAHARASHTRA - 411037, India ~72: DHONDE, Shreyansh;DHORAGE, Prathamesh;JOSHI, Kalpesh V.;KSHIRASAGAR, Dhruv;MAHAJAN, Chandrashekhar M.;PATEL, Dhruv;RAIKWAR, RaJesh G.;THAKKAR, Dhruv~

2023/09751 ~ Complete ~54:A METHOD TO IDENTIFY AND SYNTHESIZE SUITABLE T-CELL EPITOPES ON E1 GLYCOPROTEIN AS POTENTIAL SUBUNIT VACCINE CANDIDATES AGAINST HEPATITIS C. ~71:Dr. Kunal Laxman Turukmane, Department of Botany, Vidya Prasarak Mandal Kinhavali's Arts, Commerce and Science College, Kinhavali Tal. Shahapur Dist. Thane- 421403, Maharashtra, India;Dr. Rahul Ashokrao More, Department of Microbiology, Dayanand Science College, Latur -413512, Maharashtra, India;Dr. Rohan Janardhan Meshram, Bioinformatics Centre, Savitribai Phule Pune University, Ganeshkhind, Pune-411007, Maharashtra, India;Prof. Raju Nivarti Gacche, Department of Biotechnology, Savitribai Phule Pune University, Ganeshkhind, Pune-411007, Maharashtra, India;Sagar Narayan Dakhane, Department of Chemistry, MES Abasaheb Garware College, Pune -411004, Maharashtra, India;Suvarna Vyankatrao Gaikwad, Department of Botany, Dada Patil Mahavidyalaya, Karjat, Dist. Ahmednagar-414402, Maharashtra, India ~72: Dr. Kunal Laxman Turukmane;Dr. Rahul Ashokrao More;Dr. Rohan Janardhan Meshram;Prof. Raju Nivarti Gacche;Sagar Narayan Dakhane;Suvarna Vyankatrao Gaikwad~

2023/09766 ~ Complete ~54:OPTICAL CABLE ~71:Huawei Technologies Co., Ltd., Huawei Administration Building, Bantian, Longgang District, SHENZHEN 518129, GUANGDONG, CHINA (P.R.C.), People's Republic of China ~72: LAI, Jianfei;LI, Hanguo;LIAO, Yuancai~ 33:CN ~31:202110665310.5 ~32:16/06/2021

2023/09767 ~ Complete ~54:A METHOD FOR SELECTION OF CRYOPRESERVED CORD BLOOD UNITS FOR THE MANUFACTURE OF ENGINEERED NATURAL KILLER CELLS WITH ENHANCED POTENCY AGAINST CANCER ~71:Board of Regents, The University of Texas System, 210 West 7th St., AUSTIN 78701, TX, USA, United States of America ~72: MARIN COSTA, David;REZVANI, Katy;SHPALL, Elizabeth~ 33:US ~31:63/164,379 ~32:22/03/2021;33:US ~31:63/243,669 ~32:13/09/2021

2023/09773 ~ Complete ~54:METHODS AND SYSTEMS FOR ANALYZING NUCLEIC ACID MOLECULES ~71:THE BOARD OF TRUSTEES OF THE LELAND STANFORD JUNIOR UNIVERSITY, Building 170, Third Floor Main Quad, P.O. Box 20386, Stanford, California, 94305-2038, United States of America ~72: ARASH ASH ALIZADEH;DAVID M KURTZ;JACOB J CHABON;MAXIMILIAN DIEHN~ 33:US ~31:17/308,958 ~32:05/05/2021;33:US ~31:63/188,410 ~32:13/05/2021;33:US ~31:63/224,795 ~32:22/07/2021

2023/09779 ~ Complete ~54:TUNDISH WITH FILTER MODULE ~71:VESUVIUS U S A CORPORATION, 1404 Newton Drive, Champaign, Illinois, 61822, United States of America ~72: ABHISHEK CHAKRABORTY;JOHAN RICHAUD;JOHN ROGLER;MARTIN KREIERHOFF~ 33:EP ~31:21172786.2 ~32:07/05/2021

2023/09757 ~ Complete ~54:VON WILLEBRAND FACTOR (VWF) INHIBITORS ~71:IP2IPO INNOVATIONS LTD, 2nd Floor 3 Pancras Square, United Kingdom ~72: CLEMO, Nadine;LEWIS, Alan;MCKINNON, Tom~ 33:GB ~31:2105625.4 ~32:20/04/2021

2023/09761 ~ Complete ~54:CATIONIC LIPIDS AND COMPOSITIONS THEREOF ~71:Generation Bio Co., 301 Binney Street, 4th Floor, CAMBRIDGE 02142, MA, USA, United States of America ~72: MILSTEAD, Andrew;NOLTING, Birte;STANTON, Matthew G.~ 33:US ~31:63/176,943 ~32:20/04/2021;33:US ~31:63/217,869 ~32:02/07/2021

2023/09782 ~ Complete ~54:A PROCESS FOR PRECIPITATING PARTICLES OF PLATINUM GROUP METALS ~71:KATHOLIEKE UNIVERSITEIT LEUVEN, KU Leuven R&D, Waaistraat 6 - Box 5105, Belgium;VITO NV, Boeretang 200, Belgium ~72: DOMINGUEZ, Xochitl;FRANSAER, Jan;MARTINEZ-MORA, Omar~ 33:EP ~31:21165681.4 ~32:29/03/2021

2023/09763 ~ Complete ~54:POLYPROPYLENE POLYMER COMPOSITIONS AND ARTICLES MADE FROM THE SAME ~71:Milliken & Company, 920 Milliken Road (M-495), SPARTANBURG 29303, SOUTH CAROLINA, USA, United States of America ~72: DOTSON, Darin;SUN, Hua;TSAI, Chi-Chun;Williams , Corey;XU, Xiaoyou~ 33:US ~31:63/178,238 ~32:22/04/2021

2023/09771 ~ Complete ~54:RHABDOVIRUS-NEGATIVE SPODOPTERA FRUGIPERDA INSECT CELL LINE, AND SCREENING, IDENTIFICATION AND APPLICATION THEREOF ~71:WESTVAC BIOPHARMA CO., LTD., No. 552 Fenghuang Road, Chengdu Tianfu International Bio-Town, Shuangliu District Chengdu, Sichuan, 610000, People's Republic of China ~72: GUOBO SHEN;LI YANG;XIAWEI WEI;YUQUAN WEI~ 33:CN ~31:202210194024.X ~32:01/03/2022

2023/09774 ~ Complete ~54:COMBINATION OF ANTI-GALECTIN-9 ANTIBODIES AND CHEMOTHERAPEUTICS FOR USE IN CANCER THERAPY ~71:PURETECH LYT, INC., 6 Tide Street Suite 400, Boston, Massachusetts, 02210, United States of America ~72: ALEKSANDRA FILIPOVIC;ERIC ELENKO~ 33:US ~31:63/182,519 ~32:30/04/2021;33:US ~31:63/193,381 ~32:26/05/2021;33:US ~31:63/313,882 ~32:25/02/2022

2023/09781 ~ Complete ~54:WATER-SOLUBLE TOPICAL OPHTHALMIC PREPARATION CONTAINING LUTEIN AND PRODUCTION METHOD THEREOF ~71:OMISAN FARMACEUTICI S.R.L., Via Galileo Galilei SNC, 00012, Guidonia Montecelio (RM), Italy ~72: GIUSEPPE DEL VECCHIO;NEVIO VONA;WALTER QUATTROCCHI~ 33:IT ~31:102021000006839 ~32:22/03/2021

2023/09740 ~ Provisional ~54:REFRACTORY LINING MATERIAL FOR IRON-MAKING ~71:METIX (PROPRIETARY) LIMITED, 204 Rivonia Road, Morningside, South Africa ~72: LOUW, Stephan Christiaan;TERBLANCHE, Gerhardus Scholtz;WEBB, Ruan~

2023/09741 ~ Provisional ~54:A METHOD FOR ENABLING OFFLINE MARKETPLACES ONLINE ~71:ANGUS POHL, 334 Mint Avenue, 7 Belvedere, South Africa ~72: ANGUS POHL~

2023/09742 ~ Provisional ~54:MULTIDISCIPLINARY PROFESSION PROTECTION ~71:ALUWANI NGCWETI MABUZA DUMA, 1 Pioneer Drive, Unit 45, Bluelakes Estate, South Africa;Andile Gumbi, Lot 905, Chrishunny road, South Africa;BONGANI ROBERT MOKGOANE, 22 WESTERN ROAD, South Africa;NDALO DUMA, Lot 905, Chrishunny road, South Africa;Preference Boniswa Duma, 01 Pioneer Drive, Unit 45, Blue Lakes Estate, Benoni, South Africa;Siyanda Mokgoane, 22 WESTERN ROAD, South Africa ~72: Preference Boniswa Duma~

2023/09748 ~ Complete ~54:CONSTRUCTION METHOD FOR REDUCING REBOUND RATE OF SHOTCRETE ~71:CHINA RAILWAY TUNNEL GROUP BEIJING CTG CONSTRUCTION CO., LTD., Yard 9, Guangqumenwai Street, Chaoyang District, Beijing, 100022, People's Republic of China;CHINA RAILWAY TUNNEL GROUP CO., LTD., No. 2, West Side of Gongye 4th Road, Mingzhuwan Starting Area, Nansha District, Guangzhou, Guangdong, 511458, People's Republic of China;CHINA RAILWAY TUNNEL GROUP ROAD & BRIDGE ENGINEERING CO., LTD., No. 86, Zhonghuan West Road, (Airport Economic Zone) Pilot Free Trade Zone, Tianjin, 300308, People's Republic of China ~72: CHAO CHEN;DEHU DONG;FAZHU DONG;FENGRONG CHEN;GUOQIANG WANG;HONG ZHANG;HUAWEI LI;LING QIN;QINFENG YANG;RUI HE;WENLONG ZHENG;XIAO CHEN;YAHUI WEI;YAJUN ZHANG;YIMING LIU;YU CHEN;YUQIANG ZHANG;ZHENGGANG LIU;ZHIYONG LI~ 33:CN ~31:202211294208.X ~32:21/10/2022

2023/09765 ~ Complete ~54:METHODS OF TREATING ESOPHAGEAL STRICTURES ~71:Ellodi Pharmaceuticals, L.P., 325 Sentry Parkway, Building 5 West, Suite 200, BLUE BELL 19422, PA, USA, United States of America ~72: EAGLE, Gina~ 33:US ~31:63/177,064 ~32:20/04/2021

2023/09769 ~ Complete ~54:CHARGING DEVICE, CHARGING PORT COVER CONTROL DEVICE, CHARGING SYSTEM, AND RELATED METHOD ~71:CHANGCHUN JETTY AUTOMOTIVE TECHNOLOGY CO., LTD., No. 957, Shunda Road, High-tech Development Zone, Chaoyang District, People's Republic of China ~72: WANG, Chao~ 33:CN ~31:202110451756.8 ~32:26/04/2021

2023/09776 ~ Complete ~54:CHIMERIC NEWCASTLE DISEASE VIRUS EXPRESSING APMV HN AND F PROTEINS ~71:ICAHN SCHOOL OF MEDICINE AT MOUNT SINAI, One Gustave L. Levy Place, New York, New York, 10029, United States of America ~72: ADOLFO GARCIA-SASTRE;FLORIAN KRAMMER;IGNACIO MENA;PETER PALESE;WEINA SUN~ 33:US ~31:63/179,994 ~32:26/04/2021;33:US ~31:63/302,434 ~32:24/01/2022

2023/09762 ~ Complete ~54:DEVICE FOR LIQUEFYING GASEOUS DIHYDROGEN FOR OFFSHORE OR ONSHORE STRUCTURE ~71:Gaztransport et Technigaz, 1 Route de Versailles, SAINT REMY LES CHEVREUSE 78470 , FRANCE, France ~72: AOUN, Bernard;BORISEVICH, Pavel~ 33:FR ~31:2104153 ~32:21/04/2021

2023/09752 ~ Complete ~54:A DEVICE FOR CONTROLLING ENGINE SPEED ~71:VISHWAKARMA INSTITUTE OF TECHNOLOGY, 666, UPPER MARKET RD, UPPER INDIRA NAGAR, BIBWEWADI, PUNE, MAHARASHTRA - 411037, India ~72: GAWALI, Rohit;HULWAN, D. B.;WAIKAR, Rahul~

2023/09755 ~ Complete ~54:FC VARIANT WITH ENHANCED AFFINITY TO FC RECEPTORS AND IMPROVED THERMAL STABILITY ~71:SANOFI, 46 Avenue de la Grande, France ~72: BENINGA, Jochen;CAMERON, Béatrice;FOCKEN, Ingo;KATHURIA, Sagar;LANGE, Christian;MASIERO, Alessandro;PARK, Sunghae;TILLMANN, Bodo~ 33:US ~31:63/193,665 ~32:27/05/2021;33:EP ~31:21315127.7 ~32:15/07/2021

2023/09745 ~ Complete ~54:A COOLING ELECTRICAL CABINET CONTROLLED BY ELECTRICAL AUTOMATION ~71:Na Wei, No. 18, Electronic Second Road, Xi'an Shiyou University, Yanta District, Xi'an City, Shaanxi Province, 710065, People's Republic of China ~72: Na Wei~

2023/09746 ~ Complete ~54:IN SITU TREATMENT OF SEED IN FURROW ~71:FMC Corporation, FMC Tower AT Cira Centre South, 2929 Walnut Street, PHILADELPHIA 19104, PA, USA, United States of America ~72: MARTIN, Timothy M.~ 33:US ~31:62/387,263 ~32:23/12/2015

2023/09753 ~ Complete ~54:THE INVENTION RELATES TO A CHINESE MEDICINE COMPOSITION AND APPLICATION FOR PREVENTION AND TREATMENT OF PESTE PETIT RUMINANT AND ANIMAL VIRAL DISEASES ~71:HUNAN GREAT WORLD VENTURE BIOTECHNOLOGY CO., LTD, Room 406, Unit 3, Building 9, Area A, Xingsha Jinying Electromechanical Market, Changsha County, Changsha City, People's Republic of China ~72: Hao LIU;Lianxiang XU;Ming XIAO;Mingan TAN;Wei LIU;Wen XIAO;Xiaobin XIAO~ 33:CN ~31:2023110257266 ~32:15/08/2023

2023/09756 ~ Complete ~54:METHODS, APPARATUSES, AND COMPUTER READABLE MEDIA FOR CONFIGURING MEASUREMENT GAP PATTERNS ~71:NOKIA TECHNOLOGIES OY, KARAKAARI 7, 02610 ESPOO, FINLAND, Finland ~72: DALSGAARD, Lars;DU, Lei;HE, Jing;YUAN, Ping~

2023/09770 ~ Complete ~54:CHARGING COVER CONTROL METHOD AND DEVICE FOR ELECTRIC VEHICLE, AND ELECTRIC VEHICLE ~71:CHANGCHUN JETTY AUTOMOTIVE TECHNOLOGY CO., LTD., No. 957, Shunda Road, High-tech Development Zone, Chaoyang District, People's Republic of China ~72: WANG, Chao~ 33:CN ~31:202110452772.9 ~32:26/04/2021

2023/09775 ~ Complete ~54:ANTI-GALECTIN-9 ANTIBODIES AND THERAPEUTIC USES THEREOF ~71:PURETECH LYT, INC., 6 Tide Street Suite 400, Boston, Massachusetts, 02210, United States of America ~72: ALEKSANDRA FILIPOVIC;ERIC ELENKO~ 33:US ~31:63/182,521 ~32:30/04/2021;33:US ~31:63/193,357 ~32:26/05/2021;33:US ~31:63/313,879 ~32:25/02/2022

2023/09778 ~ Complete ~54:NUCLEIC ACID ENRICHMENT AND DETECTION ~71:BIOFIDELITY, 330 Cambridge Science Park, Milton Road, Cambridge, Cambridgeshire, CB4 0WN, United Kingdom ~72: BARNABY BALMFORTH;MAGDALENA STOLAREK-JANUSZKIEWICZ;ROBERT OSBORNE~ 33:GB ~31:2105388.9 ~32:15/04/2021;33:GB ~31:2105405.1 ~32:15/04/2021;33:GB ~31:2111381.6 ~32:06/08/2021

2023/09783 ~ Complete ~54:POWER SUPPLY MODE DETERMINATION METHOD AND APPARATUS, AND TRANSMISSION CONTROL SYSTEM AND ELECTRONIC DEVICE ~71:ZHUZHOU CRRC TIMES ELECTRIC CO., LTD., No.169, Shidai Road, Shifeng District Zhuzhou, People's Republic of China ~72: CHEN, Zhibo;GAN, Weiwei;GUO, Wei;LI, Xueming;LIANG, Xingyuan;WANG, Yu;WU, Changyou~ 33:CN ~31:202111154578.9 ~32:29/09/2021

2023/09747 ~ Complete ~54:CONSTRUCTION METHOD FOR ON-SITE FORMING OF THE CENTRAL DITCH OF HIGHWAY TUNNEL ~71:CHINA RAILWAY TUNNEL GROUP BEIJING CTG CONSTRUCTION CO., LTD.,

Yard 9, Guangqumenwai Street, Chaoyang District, Beijing, 100022, People's Republic of China;CHINA RAILWAY TUNNEL GROUP CO., LTD., No. 2, West Side of Gongye 4th Road, Mingzhuwan Starting Area, Nansha District, Guangzhou, Guangdong, 511458, People's Republic of China;CHINA RAILWAY TUNNEL GROUP ROAD & BRIDGE ENGINEERING CO., LTD., No. 86, Zhonghuan West Road, (Airport Economic Zone) Pilot Free Trade Zone, Tianjin, 300308, People's Republic of China ~72: CHAO CHEN;DEHU DONG;FENGRONG CHEN;JIANLUO HE;QINFENG YANG;QINGCHENG JIANG;RUI HE;SHAOBO WANG;WENLONG ZHENG;XIANG JI;XIAONING ZHONG;YAJUN ZHANG;YANG LI;YIMING LIU;YONGLIANG MA;YU CHEN;YUQIANG ZHANG;ZENGYIN XIA;ZHENGGANG LIU;ZHIYONG LI~ 33:CN ~31:202211294403.2 ~32:21/10/2022

2023/09764 ~ Complete ~54:AAVRH74 VECTORS FOR GENE THERAPY OF MUSCULAR DYSTROPHIES ~71:University of Florida Research Foundation, Incorporated, 223 Grinter Hall, GAINESVILLE 32611, FL, USA, United States of America ~72: BYRNE, Barry John;QING, Keyun;SRIVASTAVA, Arun~ 33:US ~31:63/179,097 ~32:23/04/2021;33:US ~31:63/327,410 ~32:05/04/2022

2023/09768 ~ Complete ~54:PHOTOCATALYTIC APPARATUS ~71:FLINDERS UNIVERSITY, Sturt Road, Bedford Park, Australia;THE UNIVERSITY OF ADELAIDE, North Terrace, Adelaide, Australia ~72: ALVINO, Jason;ANDERSSON, Gunther;METHA, Gregory;OSBORN, D.J.~ 33:AU ~31:2021900997 ~32:06/04/2021

2023/09777 ~ Complete ~54:THORIUM PEROXIDE-BASED GENERATOR FOR AC-225 GENERATION ~71:TERRAPOWER, LLC, 15800 Northup Way, Bellevue, Washington, 98008, United States of America ~72: HILARY FITZGERALD;KEN CZERWINSKI~ 33:US ~31:63/187,728 ~32:12/05/2021

2023/09750 ~ Complete ~54:AN ALCOHOL DETECTION AND ENGINE LOCKING SYSTEM FOR VEHICLES ~71:VISHWAKARMA INSTITUTE OF TECHNOLOGY, 666, UPPER MARKET RD, UPPER INDIRA NAGAR, BIBWEWADI, PUNE, MAHARASHTRA - 411037, India ~72: JADAHAVAR, Deepak;JADHAV, Shivam;JADHAV, Shrinivas;JADHAV, Vedanti;JADHAV, Yogesh;JALNEKAR, Rajesh M.;MAHAJAN, Chandrashekhar M.;RAJPUT, Vaishhali~

2023/09744 ~ Complete ~54:METHOD FOR FULL-SIZE ENHANCED SULFIDIZATION AND CLASSIFIED FLOTATION RECOVERY OF ZINC OXIDE ORE ~71:Kunming University of Science and Technology, No. 253 Xuefu Road, Wuhua District, Kunming City, Yunnan Province, 650093, People's Republic of China ~72: FENG, Qicheng;HAN, Guang;LIAO, Runpeng;LIU, Dianwen;MIAO, Yongchao;WEN, Shuming;ZHANG, Ga;ZHANG, Yingchao;ZHAO, Guanghu;ZHAO, Wenjuan~ 33:CN ~31:202211347011.8 ~32:31/10/2022

. - APPLIED ON 2023/10/20 -

2023/09784 ~ Provisional ~54:ECLRT REMOVAL TOOL ~71:Stephanus Johannes Ferreira, 3 Poppy Place, Doornpoort, Pretoria, South Africa ~72: Stephanus Johannes Ferreira~ 33:ZA ~31:2006.01 ~32:12/10/2023

2023/09788 ~ Complete ~54:METHOD, DEVICE, ELECTRONIC EQUIPMENT AND STORAGE MEDIUM FOR PREDICTING LAND-USE TYPES ~71:SHIHEZI UNIVERSITY, No.221 Beisi Road, Shihezi City, Xinjiang, People's Republic of China ~72: DING Mingrui;LIU Pengshuai;MA Anqiang;PAN Shaoliang;SHU Jikai;WANG Dimeng;WANG Jiaojiao;WU Pengjie;YIN Xiaojun~ 33:CN ~31:2022113138512 ~32:25/10/2022

2023/09804 ~ Complete ~54:MODIFIED ANTI-TSLP ANTIBODIES ~71:Amgen Inc., One Amgen Center Drive, THOUSAND OAKS 91320-1799, CA, USA, United States of America ~72: BONDARENKO, Pavel;SHI, Liuqing;ZHANG, Hao~ 33:US ~31:63/178,915 ~32:23/04/2021

2023/09807 ~ Complete ~54:HDAC6 INHIBITORS FOR USE IN THE TREATMENT OF DILATED CARDIOMYOPATHY ~71:Tenaya Therapeutics, Inc., 171 Oyster Point Boulevard, Suite 500, SOUTH SAN

FRANCISCO 94080, CA, USA, United States of America ~72: HOEY, Timothy C.;MANDEGAR, Mohammad A.;YANG, Jin~ 33:US ~31:63/178,901 ~32:23/04/2021

2023/09794 ~ Complete ~54:ANTIBODY-PEPTIDE FUSION PROTEINS FOR TREATING AMYLOID DISORDERS ~71:ATTRALUS, INC., 337 Beach Road, Suite C, Burlingame, United States of America;UNIVERSITY OF TENNESSEE RESEARCH FOUNDATION, 400 W Summit Hill Dr., UT Tower 961A, United States of America ~72: FOSTER, James, S.;GUTHRIE, Spencer;KLEIN, Michael L.;PONS, Jaume;WALL, Jonathan, S.~ 33:US ~31:63/190,191 ~32:18/05/2021

2023/09800 ~ Complete ~54:A COMPOSITE FERMENTATION BACTERICIDE FOR CONTROLLING RICE PLANTHOPPER AND A PREPARATION METHOD THEREOF ~71:HUBEI MAOSHENG BIOLOGY CO., LTD., Group 6, Qinlao Community, Lishan Town, Suixian County, Suizhou city, Hubei Province, 441300, People's Republic of China ~72: Jie Huang;Qi Liu;Yixin Zhou;Yu Jiang~

2023/09810 ~ Complete ~54:POLYETHYLENE POLYMER COMPOSITIONS AND ARTICLES MADE FROM THE SAME ~71:Milliken & Company, 920 Milliken Road, M-495, SPARTANBURG 29303, SC, USA, United States of America ~72: DOTSON, Darin;FORRISTER, Walter;SUN, Hua;XU, Xiaoyou~ 33:US ~31:63/178,217 ~32:22/04/2021

2023/09818 ~ Complete ~54:AMPLIFICATION TECHNIQUES FOR NUCLEIC ACID CHARACTERIZATION ~71:ILLUMINA CAMBRIDGE LIMITED, 19 Granta Park, Great Abington, United Kingdom;ILLUMINA, INC., 5200 Illumina Way, United States of America ~72: GORMLEY, Niall Anthony;WANG, Clifford Lee~ 33:US ~31:63/181,769 ~32:29/04/2021

2023/09793 ~ Complete ~54:METHOD AND SYSTEMS FOR USING SENSORS TO DETERMINE CHARACTERISTICS OF SEEDS OR PARTICLES ~71:PRECISION PLANTING LLC, 23207 Townline Road, Tremont, United States of America ~72: FRANK, William;STRNAD, Michael~ 33:US ~31:63/260,162 ~32:11/08/2021

2023/09797 ~ Complete ~54:PEPTIDE-FC FUSIONS FOR TREATING AMYLOID DISORDERS ~71:ATTRALUS, INC., 337 Beach Road, Suite C, Burlingame, United States of America;UNIVERSITY OF TENNESSEE RESEARCH FOUNDATION, 400 W Summit Hill Dr., UT Tower 961A, United States of America ~72: FOSTER, James, S.;PONS, Jaume;WALL, Jonathan, S.~ 33:US ~31:63/184,682 ~32:05/05/2021;33:US ~31:63/186,605 ~32:10/05/2021

2023/09802 ~ Complete ~54:PRESSURE RELIEF VALVE SYSTEM AND PRESSURE RELIEF METHOD ~71:Shanghai Nuclear Engineering Research & Design Institute Co., Ltd., No. 29 Hongcao Road, SHANGHAI 200233, XUHUI DISTRICT, CHINA (P.R.C.), People's Republic of China ~72: CAO, Kemei;FU, Tingzao;GUO, Ning;LIU, Zhan;YANG, Bo;ZHANG, Kun~ 33:CN ~31:202110302346.7 ~32:22/03/2021

2023/09816 ~ Complete ~54:MAGNETIC INTERACTION SYSTEM BETWEEN ROTORS FOR PRODUCTION AND STORAGE OF KINETIC ENERGY ~71:NEODYMOTORS GMBH, Forststrasse 1, 80997, Munich, Germany ~72: PAULO EDUARDO DE SOUSA PEREIRA~

2023/09792 ~ Complete ~54:COVER OPENING INSPECTION DEVICE FOR GEARBOX SPLINE SHAFT AND SECONDARY SUN GEAR OF WIND TURBINE GENERATOR SYSTEM ~71:Huaneng Tongliao Wind Power Co. Ltd, Intersection of Qinglongshan Street and Shengli North Road, Tongliao City 028000, Inner Mongolia, CHINA (P.R.C.), People's Republic of China ~72: Li, Shibin;Li, Zheng;Ma, Wenbin;Wang, Fengqi;Wang, Jianguo;Zhang, Lianwu~ 33:CN ~31:202310942433.8 ~32:30/07/2023

2023/09805 ~ Complete ~54:ANTI-TSLP ANTIBODY COMPOSITIONS AND USES THEREOF ~71:Amgen Inc., One Amgen Center Drive, THOUSAND OAKS 91320-1799, CA, USA, United States of America ~72: ABRAMS, Kristin;FITZPATRICK, Kelly;JOUBERT, Marisa;POLOZOVA, Alla;XIANG, Dong;ZHANG, Hao~ 33:US ~31:63/178,938 ~32:23/04/2021

2023/09808 ~ Complete ~54:POLYETHYLENE POLYMER COMPOSITIONS AND ARTICLES MADE FROM THE SAME ~71:Milliken & Company, 920 Milliken Road (M-495), SPARTANBURG 29303, SOUTH CAROLINA, USA, United States of America ~72: DOTSON, Darin;FORRISTER, Walter;SUN, Hua;XU, Xiaoyou~ 33:US ~31:63/178,217 ~32:22/04/2021

2023/09785 ~ Provisional ~54:SATELLITE ANTENNA RECEIVING AND TRANSMITTING SIGNALS FOR BROADCASTING TELEVISION AND VIDEO CALLING. ~71:AHMED WASEEF SAIB, 24 Park Avenue, Desainager, South Africa ~72: AHMED WASEEF SAIB~

2023/09799 ~ Complete ~54:BACILLUS THURINGIENSIS BIOCONTROL AGENT FOR INHIBITING REPRODUCTION OF CORN BORER AND A PREPARATION METHOD THEREOF ~71:HUBEI MAOSHENG BIOLOGY CO., LTD., Group 6, Qinlao Community, Lishan Town, Suixian County, Suizhou city, Hubei Province, 441300, People's Republic of China ~72: Jie Huang;Qi Liu;Yixin Zhou;Yu Jiang~

2023/09809 ~ Complete ~54:POLYETHYLENE POLYMER COMPOSITIONS AND ARTICLES MADE FROM THE SAME ~71:Milliken & Company, 920 Milliken Road (M-495), SPARTANBURG 29303, SOUTH CAROLINA, USA, United States of America ~72: DOTSON, Darin;FORRISTER, Walter;SUN, Hua;XU, Xiaoyou~ 33:US ~31:63/178,217 ~32:22/04/2021

2023/09817 ~ Complete ~54:METHODS AND KITS FOR DIAGNOSING COVID-19 DISEASE ~71:STELLENBOSCH UNIVERSITY, Admin B, Victoria Street, Stellenbosch, Western Cape, 7600, South Africa ~72: ETHERESIA PRETORIUS~ 33:GB ~31:2105644.5 ~32:20/04/2021

2023/09790 ~ Complete ~54:FLOOR TILE DEVICE FOR FIRE ESCAPE ~71:Zhejiang University of Science and Technology, No.318 Liuhe Road, Xihu District, Hangzhou City, Zhejiang Province, 310023, People's Republic of China ~72: Chuitao Sun;Chunxiang Yu;Jian Zhou;Pengfei Cheng;Xin Jin;Yijie Wang;Zhenyu Zhang~

2023/09801 ~ Complete ~54:SUBSTITUTED PYRROLIDIN-2-ONES, SALTS THEREOF AND THEIR USE AS HERBICIDALLY ACTIVE SUBSTANCES ~71:Bayer Aktiengesellschaft, Kaiser-Wilhelm-Allee 1, LEVERKUSEN 51373, GERMANY, Germany ~72: ARVE, Lars;BOLLENBACH-WAHL, Birgit;DIETRICH, Hansjörg;DITTGEN, Jan;FRACKENPOHL, Jens;GATZWEILER, Elmar;HEINEMANN, Ines;REINGRUBER, Anna Maria;SCHMUTZLER, Dirk~ 33:EP ~31:21163986.9 ~32:22/03/2021

2023/09811 ~ Complete ~54:MULTI-SPECIFIC ANTIBODY TARGETING BCMA ~71:CHIA TAI TIANQING PHARMACEUTICAL GROUP CO., LTD., No. 369 Yuzhou South Rd., Lianyungang, Jiangsu, 222062, People's Republic of China ~72: BING ZHANG;JUNXIAO XI;MEIJUAN XIE;MIN DU;WEI ZHAO;XIN SONG;XIN WANG;XIUZHEN DU;YAMIN LU;ZIPENG ZHEN~ 33:CN ~31:202110405638.3 ~32:15/04/2021

2023/09815 ~ Complete ~54:ANTIBODIES ~71:UCB BIOPHARMA SRL, 60, Allée de la Recherche, 1070, Brussels, Belgium ~72: ANASTASIOS SPILIOTOPOULOS;DANIEL JOHN LIGHTWOOD;IRENA KADIU;JAMES MARTIN KEANEY;JAN ABENDROTH;PALLAVI BHATTA;PETER CHARLES ELLIOTT;SILVIA L DELKER~ 33:US ~31:63/183,280 ~32:03/05/2021

2023/09787 ~ Provisional ~54:SHADOW-SHIELD COLLIMATOR SYSTEM FOR NEONATAL RADIOGRAPHY ~71:CENTRAL UNIVERSITY OF TECHNOLOGY, FREE STATE, 20 President Brand Street, South Africa;UNIVERSITY OF PRETORIA, Lynnwood Road, South Africa ~72: VAN DER LINDE, Beatrix~

2023/09812 ~ Complete ~54:USE OF ANTIBODY IN ANTI-TUMOR TREATMENT ~71:AD PHARMACEUTICALS CO., LTD., 162 Kexuedadao, Chuangyidasha B2, Unit 1101, Guangzhou New And Hi-Tech Industrial Development Zone, Guangzhou Guangdong, 510530, People's Republic of China;AKESO PHARMACEUTICALS, INC., 158 Kangyao Road South, Huangpu, Guangzhou, Guangdong 510799, People's Republic of China ~72: BAIYONG LI;YU XIA;ZHONGMIN MAXWELL WANG~ 33:CN ~31:202110404963.8 ~32:14/04/2021

2023/09819 ~ Complete ~54:ANTIGEN-BINDING PROTEIN TARGETING STREPTOCOCCUS PNEUMONIAE HEMOLYSIN AND USE THEREOF ~71:STARMAB BIOLOGICS (SHANGHAI) CO., LTD, Building 3 and 4, No. 2666 Panjing Road, Baoshan District, People's Republic of China;STARMAB BIOLOGICS (SUZHOU) CO., LTD, Room 208, Building 2 No. 40, Suhong West Road, People's Republic of China ~72: AN, Maomao;CHEN, Simin;GUO, Shiyu;LI, Bohua;QIU, Xiran~ 33:CN ~31:202110301731.X ~32:22/03/2021

2023/09796 ~ Complete ~54:ANTI-SIRP-ALPHA ANTIBODIES ~71:BOEHRINGER INGELHEIM INTERNATIONAL GMBH, Binger Strasse 173, Germany;OSE IMMUNOTHERAPEUTICS SA, 1 rue Gaston Veil, 44035 Nantes, France ~72: BOETTCHER, Jark;GUPTA, Pankaj;GUPTA, Priyanka;HABTE, Habtom;HUANG, Yining;KUMAR, Sandeep;PHOENIX, Kathryn;RALPH, Kerry-Leigh;TROMBETTA, Eduardo Sergio;TSANG, Wing Pan Kenny~ 33:US ~31:63/197,259 ~32:04/06/2021;33:US ~31:63/325,828 ~32:31/03/2022;33:US ~31:63/339,326 ~32:06/05/2022

2023/09786 ~ Provisional ~54:A SCARECROW ~71:BAD BIRDY (PTY) LTD, 11 Simba Street, Sebenza, Edenvale, South Africa ~72: VAN BILJOEN, Jeffrey;VAN BILJOEN, Kyle Liam~

2023/09798 ~ Complete ~54:GIS PARTIAL DISCHARGE DIAGNOSING METHOD, MODEL TRAINING METHOD, DEVICE AND SYSTEM ~71:ZHUHAI ELECTAC HIGH TECHNOLOGY CO., LTD, No. 2, Pingdong 2nd Road, Nanping Science Park, Xiangzhou District, Zhuhai, People's Republic of China ~72: FANG, Laijin;HAN, Maowen;HUANG, haojian;LIN, Hairong;MIAO, Chusheng;WU, Jianming;YANG, Kai;Yi, Xiaobo;ZHANG, Hua~ 33:CN ~31:202211062539.0 ~32:01/09/2022

2023/09806 ~ Complete ~54:METHOD OF IDENTIFYING A SOIL-BORNE PATHOGEN ON A TARGET CROP IN AN AGRICULTURAL PARCEL ~71:Syngenta Crop Protection AG, Rosentalstrasse 67, BASEL 4058, SWITZERLAND, Switzerland ~72: JOALLAND, Samuel;SNAPIR, Boris~ 33:EP ~31:21169924.4 ~32:22/04/2021

2023/09814 ~ Complete ~54:PRODUCTION PROCESS FOR PRODUCING BIOGAS BY MEANS OF ANAEROBIC CO-DIGESTION ~71:ECONWARD TECH, S.L.U., Alcalá, 21 - 10º Derecha , 28014, Madrid, Spain ~72: ALBERTO SALGUERO CARVAJAL;JAVIER MENA SANZ;JULIÁN ALBERTO SOLER;JULIO CÉSAR APARICIO GAYA;RUBÉN GARCÍA CANO~

2023/09791 ~ Complete ~54:SWING-TYPE VALVE PLATE FINISHING MACHINE ~71:Hefei Anxin Reed Precision Manufacturing Co., Ltd., No.15, Feiyang South Road, Dayang Town, Luyang District, Hefei City, Anhui Province, 230061, People's Republic of China ~72: BU Shuai;GU Yunhui;GUO Yuxiang;MEI Ya;XU Haibing;ZHANG Rui~ 33:CN ~31:202211722311.X ~32:30/12/2022

2023/09789 ~ Complete ~54:FIRE ESCAPE INTELLIGENT FLOOR TILE DEVICE ~71:Zhejiang University of Science and Technology, No.318 Liuhe Road, Xihu District, Hangzhou City, Zhejiang Province, 310023, People's Republic of China ~72: Chuitao Sun;Chunxiang Yu;Jian Zhou;Pengfei Cheng;Xin Jin;Yijie Wang;Zhenyu Zhang~

2023/09795 ~ Complete ~54:ENVIRONMENTALLY-CLEAN WATER-BASED FIRE INHIBITING AND EXTINGUISHING COMPOSITIONS, AND METHODS OF AND APPARATUS FOR APPLYING THE SAME ~71:MIGHTY FIRE BREAKER LLC, 2200 Allentown Road Lima, United States of America ~72: CONBOY, Stephen~ 33:US ~31:17/167,084 ~32:04/02/2021;33:US ~31:17/176,670 ~32:16/02/2021;33:US ~31:17/233,461 ~32:17/04/2021

2023/09803 ~ Complete ~54:COMPOUNDS AS PD1/PD-L1 INHIBITORS AND METHODS THEREOF ~71:Jubilant Prodel LLC, 1430 US Highway 206, Suite 110, Bedminster, NEW JERSEY 07921, NJ, USA, United States of America ~72: MOHD, Zainuddin;RAJAGOPAL, Sridharan;SADHU, Naveen;SIVANANDHAN, Dhanalakshmi~ 33:IN ~31:202141018688 ~32:22/04/2021

2023/09813 ~ Complete ~54:SACRIFICIAL COMPOSITE PART THAT ABSORBS ENERGY DURING A VEHICLE COLLISION ~71:HUTCHINSON, 2, Rue Balzac, 75008, Paris, France ~72: GUY VALEMBOIS~ 33:FR ~31:FR2104352 ~32:27/04/2021

ASSIGNMENTS IN TERMS OF SECTION 60-REGULATIONS 58-60 AND 64 (1)

Application Number	Assignor	Assignee
2022/11389	SMILEBIOTEK ZHUHAI LIMITED	SMILEBIOTEK GUANGZHOU LIMITED
2022/11546	KINDRED BIOSCIENCES, INC.	ELANCO US INC.
2019/05492	KINDRED BIOSCIENCES, INC.	ELANCO US INC.
2019/06820	KINDRED BIOSCIENCES, INC.	ELANCO US INC.
2020/00677	KINDRED BIOSCIENCES, INC.	ELANCO US INC.
2021/01705	KINDRED BIOSCIENCES, INC.	ELANCO US INC.
2022/09687	KINDRED BIOSCIENCES, INC.	ELANCO US INC.
2022/09687	KINDRED BIOSCIENCES, INC.	ELANCO US INC.
2018/07020	UNIVERSITE PARIS DESCARTES and UNIVERSITE PARIS DIDEROT – PARIS 7	UNIVERSITE DE PARIS
2012/01752	UNIVERSITE PARIS DIDEROT – PARIS 7	UNIVERSITE DE PARIS
2018/00804	UNIVERSITE PARIS DIDEROT – PARIS 7	UNIVERSITE DE PARIS
2014/07718	METSO OUTOTEC SWEDEN AB	METSO OUTOTEC USA INC.
2019/08501	METSO MINERALS INDUSTRIES, INC.	METSO OUTOTEC USA INC.
2019/08501	METSO OUTOTEC USA INC.	METSO OUTOTEC SWEDEN AB
2018/03878	METSO MINERALS INDUSTRIES, INC.	METSO OUTOTEC USA INC.
2018/03878	METSO OUTOTEC USA INC.	METSO OUTOTEC SWEDEN AB
2019/04586	UNIVERSITE PARIS-SUD 11	UNIVERSITE PARIS-SACLAY
2019/04586	UNIVERSITE PARIS DIDEROT – PARIS 7	UNIVERSITE DE PARIS
2013/07390	UNIVERSITE PARIS DESCARTES	UNIVERSITE DE PARIS
2019/05470	UNIVERSITE PARIS DESCARTES	UNIVERSITE DE PARIS
2009/00148	ENCYCLE CORPORATION	ENCYCLE TECHNOLOGIES, INC.
2013/06293	ENCYCLE CORPORATION	ENCYCLE TECHNOLOGIES, INC.
2015/08923	POLYWASTE INTELLECTUAL PROPERTY PTY LIMITED	PLASTECH RECYCLING PROPRIETARY LIMITED
2019/08531	BAYER BUSINESS SERVICES GMBH	BAYER AKTIENGESELLSCHAFT
2022/13265	FOCHON PHARMACEUTICALS, LTD.	FOCHON BIOSCIENCES, LTD.
2018/02132	UNIVERSITE PARIS DESCARTES	UNIVERSITE DE PARIS
2018/00804	UNIVERSITE PARIS-SUD 11	UNIVERSITE PARIS-SACLAY
2015/08647	DAVID HANNS	DRILLTERRA TECHNOLOGIES PTY LTD

Application Number	Assignor	Assignee
2010/04885	HI TECH ROBOTIC SYSTEMZ LTD	NOVUS HI-TECH ROBOTIC SYSTEMZ PRIVATE LTD
2018/01598	HI TECH ROBOTIC SYSTEMZ LTD	NOVUS HI-TECH ROBOTIC SYSTEMZ PRIVATE LTD
2013/03477	HI TECH ROBOTIC SYSTEMZ LTD	NOVUS HI-TECH ROBOTIC SYSTEMZ PRIVATE LTD
2019/04733	CORVIDIA THERAPEUTICS, INC.	NOVO NORDISK A/S, and THE UNITED STATES OF AMERICA, AS REPRESENTED BY THE SECRETARY, DEPARTMENT OF HEALTH & HUMAN SERVICES
201801596	HI TECH ROBOTIC SYSTEMZ LTD	NOVUS HI-TECH ROBOTIC SYSTEMZ PRIVATE LTD
2018/01597	HI TECH ROBOTIC SYSTEMZ LTD	NOVUS HI-TECH ROBOTIC SYSTEMZ PRIVATE LTD
2018/01599	HI TECH ROBOTIC SYSTEMZ LTD	NOVUS HI-TECH ROBOTIC SYSTEMZ PRIVATE LTD
2018/01285	HI TECH ROBOTIC SYSTEMZ LTD	NOVUS HI-TECH ROBOTIC SYSTEMZ PRIVATE LTD
2023/06164	ZHONGFAN HAOXING (BEIJING) NEW ENERGY TECHNOLOGY CO., LTD.	HUNAN SHANFENG VANADIUM INDUSTRY CO., LTD.
2023/01157	CONCERT PHARMACEUTICALS, INC.	SUN PHARMACEUTICAL INDUSTRIES, INC.
2023/06749	K2022830940 (SOUTH AFRICA) (PTY) LTD	V2 FAMILY TRUST
2019/06827	INL – INTERNATIONAL IBERIAN NANOTECHNOLOGY LABORATORY	SOGRAPE VINHOS, S.A.
2022/05002	M.E.D ENERGY INC.	GOZERTA LLC
2011/04678	TETRONICS (INTERNATIONAL) LIMITED	PLASMA PROCESSING UK LTD
2011/04926	PHONOVATION LIMITED	PAMGO SOLUTIONS LIMITED
2015/08371	MARCHMONT PTY LIMITED	REDCAT GROUP PTY LTD (AS TRUSTEES FOR THE REDCAT INDUSTRIES UNIT TRUST) CAN 660 479 283
2019/08500	METSO MINERALS INDUSTRIES, INC.	METSO OUTOTEC USA INC.
2019/08500	METSO OUTOTEC USA INC.	METSO OUTOTEC SWEDEN AB
2020/03143	METSO OUTOTEC SWEDEN AB	METSO OUTOTEC USA INC.
2021/04153	METSO OUTOTEC SWEDEN AB	METSO OUTOTEC USA INC.
2016/07329	VERTIGO MEDIA, INC.	SGPH, LLC
2016/04558	VERTIGO MEDIA, INC.	SGPH, LLC
2020/03144	METSO OUTOTEC SWEDEN AB	METSO OUTOTEC USA INC.
2021/03646	SWEDISH STIRLING AB	TEXEL TECHNOLOGIES AB
2022/06313	SWEDISH STIRLING AB	TEXEL TECHNOLOGIES AB
2019/07928	KINDRED BIOSCIENCES, INC.	ELANCO USA INC.
2020/03694	BRITISH AMERICAN TOBACCO (INVESTMENTS) LIMITED	NICOVENTURES TRADING LIMITED
2019/02328	POLICLINICO SAN DONATO S.P.A. – ISTITUTO DI RICOVERO E CURA A CARATTERE SCIENTIFICO	MULTIMEDICA S.P.A.

Application Number	Assignor	Assignee
2010/00285	EVODOS B.V.	BIORGANICS UFT B.V.
2021/09785	COMMONWEALTH SCIENTIFIC AND INDUSTRIAL RESEARCH ORGANISATION	PPB TECHNOLOGY PTY LTD
2020/01215	BRITISH AMERICAN TOBACCO (INVESTMENTS) LIMITED	NICOVENTURES TRADING LIMITED
2020/01138	NICOVENTURES HOLDINGS LIMITED	NICOVENTURES TRADING LIMITED
2013/08103	PEKEIJA OY	HANKONEN MANAGEMENT OY
2016/02967	ENN COAL GASIFICATION MINING CO., LTD.	ENN SCIENCE AND ECHNOLOGY DEVELOPMENT CO., LTD.
2016/05974	ENN COAL GASIFICATION MINING CO., LTD.	ENN SCIENCE AND ECHNOLOGY DEVELOPMENT CO., LTD.
2016/02763	ENN COAL GASIFICATION MINING CO., LTD.	ENN SCIENCE AND ECHNOLOGY DEVELOPMENT CO., LTD.
2016/02060	ENN COAL GASIFICATION MINING CO., LTD.	ENN SCIENCE AND ECHNOLOGY DEVELOPMENT CO., LTD.
2016/05975	ENN COAL GASIFICATION MINING CO., LTD.	ENN SCIENCE AND ECHNOLOGY DEVELOPMENT CO., LTD.
2015/09226	ENN COAL GASIFICATION MINING CO., LTD.	ENN SCIENCE AND ECHNOLOGY DEVELOPMENT CO., LTD.
2015/07868	SCHENCK PROCESS EUROPE GMBH	SANDVIK MINING AND CONSTRUCTION DEUTSCHLAND GMBH
2015/07868	SANDVIK MINING AND CONSTRUCTION DEUTSCHLAND GMBH	SCHENCK PROCESS AUSTRALIA PTY LIMITED
2015/07883	SCHENCK PROCESS EUROPE GMBH	SANDVIK MINING AND CONSTRUCTION DEUTSCHLAND GMBH
2015/07883	SANDVIK MINING AND CONSTRUCTION DEUTSCHLAND GMBH	SCHENCK PROCESS AUSTRALIA PTY LIMITED
2016/01657	SCHENCK PROCESS EUROPE GMBH	SANDVIK MINING AND CONSTRUCTION DEUTSCHLAND GMBH
2016/01657	SANDVIK MINING AND CONSTRUCTION DEUTSCHLAND GMBH	SCHENCK PROCESS AUSTRALIA PTY LIMITED
2016/03989	SCHENCK PROCESS EUROPE GMBH	SANDVIK MINING AND CONSTRUCTION DEUTSCHLAND GMBH
2016/03989	SANDVIK MINING AND CONSTRUCTION DEUTSCHLAND GMBH	SCHENCK PROCESS AUSTRALIA PTY LIMITED
2019/03201	SWEDISH BIOMETRICS 3000 LIMITED	NOVA LABORATORIES LIMITED
2019/03201	NOVA LABORATORIES LIMITED	NOVA PRIMARY MANUFACTURING LIMITED
2017/05664	PROTHENA BIOSCIENCES LIMITED	NEOTOPE NEUROSCIENCE LIMITED
2022/06063	KOEHLER INNOVATION & TECHNOLOGY GMBH and SUNCOAL INDUSTRIES GMBH	SUNCOAL INDUSTRIES GMBH
2017/05663	PROTHENA BIOSCIENCES LIMITED	NEOTOPE NEUROSCIENCE LIMITED
2017/05663	NEOTOPE NEUROSCIENCE	NOVO NORDISK A/S

Application Number	Assignor	Assignee
	LIMITED	
2018/00530	THE UNIVERSITY OF SYDNEY	KINOXIS THERAPEUTICS PTY LTD
2017/05664	PROTHENA BIOSCIENCES LIMITED	NEOTOPE NEUROSCIENCE LIMITED
2017/05664	NEOTOPE NEUROSCIENCE LIMITED	NOVO NORDISK A/S
2011/04528	SWEDISH BIOMETRICS 3000 LIMITED	NOVA LABORATORIES LIMITED
2011/04528	NOVA LABORATORIES LIMITED	NOVA PRIMARY MANUFACTURING LIMITED
2017/05662	PROTHENA BIOSCIENCES LIMITED	NEOTOPE NEUROSCIENCE LIMITED
2017/05662	NEOTOPE NEUROSCIENCE LIMITED	NOVO NORDISK A/S
2020/02141	PROTHENA BIOSCIENCES LIMITED	NEOTOPE NEUROSCIENCE LIMITED
2020/02141	NEOTOPE NEUROSCIENCE LIMITED	NOVO NORDISK A/S
2020/02137	PROTHENA BIOSCIENCES LIMITED	NEOTOPE NEUROSCIENCE LIMITED
2020/02137	NEOTOPE NEUROSCIENCE LIMITED	NOVO NORDISK A/S
2022/07581	BIOHAVEN PHARMACEUTICAL HOLDING COMPANY LTD.	PFIZER IRELAND PHARMACEUTICALS
2019/04290	THE UNIVERSITY OF SYDNEY	KINOXIS THERAPEUTICS PTY LTD
2023/00169	KOEHLER INNOVATION & TECHNOLOGY GMBH and SUNCOAL INDUSTRIES GMBH	SUNCOAL INDUSTRIES GMBH
2023/05137	SEMIOND, DOROTHEE	SANOFI-AVENTIS U.S. LLC.
2023/05137	THAI, HOAI-THU and VEYRAT-FOLLET, CHRISTINE	SANOFI-AVENTIS RECHERCHE & DEVELOPPEMENT
2023/05137	SANOFI-AVENTIS RECHERCHE & DEVELOPPEMENT	SANOFI-AVENTIS U.S. LLC.
2023/05137	VAN DE VELDE, HEIGI	SANOFI-BELGIUM NV-SA
2023/05137	SANOFI-BELGIUM NV-SA	SANOFI-AVENTIS U.S. LLC.
2019/03043	THE MEDICINES COMPANY	NOVARTIS AG
2023/04733	SANDVIK MINING AND CONSTRUCTION DEUTSCHLAND GMBH	SCHENCK PROCESS AUSTRALIA PTY LTD

CHANGE OF NAME IN TERMS OF REGULATION 39

Application Number	In the name of	New name
2021/00202	UNIVERSITE DE PARIS	UNIVERSITE PARIS CITE
2021/10224	ENOCHIAN BIOPHARMA, INC.	RENOVARO BIOPHARMA INC.
2018/07020	UNIVERSITE DE PARIS	UNIVERSITE PARIS CITE
2018/00804	UNIVERSITE DE PARIS	UNIVERSITE PARIS CITE
2014/07718	METSO MINERALS (SWEDEN) AB	METSO SWEDEN AB

Application Number	In the name of	New name
2014/07718	METSO SWEDEN AB	METSO OUTOTEC SWEDEN AB
2019/04586	UNIVERSITE DE PARIS	UNIVERSITE PARIS CITE
2013/07390	UNIVERSITE DE PARIS	UNIVERSITE PARIS CITE
2019/05470	UNIVERSITE DE PARIS	UNIVERSITE PARIS CITE
2018/02132	UNIVERSITE DE PARIS	UNIVERSITE PARIS CITE
2011/04678	PLASMA PROCESSING UK LTD	TETRONICS TECHNOLOGIES LIMITED
2020/03143	METSO SWEDEN AB	METSO OUTOTEC SWEDEN AB
2020/03144	METSO SWEDEN AB	METSO OUTOTEC SWEDEN AB
2023/01635	GUBRA APS	GUBRA A/S
2018/00998	ADAMIS PHARMACEUTICALS CORPORATION	DMK PHARMACEUTICALS CORPORATION
2023/06655	IBEX BIOSCIENCES, LLC	IBEX BIOSCIENCES, INC.
2012/06804	PLASMA WATER SOLUTIONS LLC	PLASMA WATER SOLUTIONS INC.
2020/02614	MS BIOTECH, INC.	AXIOTA U.S. INC.
2019/05595	MS BIOTECH, INC.	AXIOTA U.S. INC.
2018/03827	TRICHORD LTD.	PERIGON UK LIMITED

PATENT LICENSES IN TERMS OF SECTION 60-REGULATIONS 58-60 AND 64

Application Number	Licensor	Licensee
2019/08429	SEAN WILLIAM HONEYWELL	WEMVULA FINTECH (PTY) LTD

PATENT APPLICATIONS ABANDONED OR WITHDRAWN

Application Number	Not Open	Date
2022/10545	WITHDRAWN	15/09/2023
2022/11015	WITHDRAWN	12/10/2023
2023/08119	WITHDRAWN	24/08/2023

APPLICATION FOR RESTORATION OF A LAPSED PATENT

No records available

THE PATENTS ACT, No. 57 OF 1978

VOLUNTARY SURRENDER OF A PATENT UNDER SECTION 64 (1), REGULATION 67 OF THE ACT

No records available

APPLICATIONS TO AMEND SPECIFICATION

THE PATENTS ACT, 1978

APPLICATIONS TO AMEND SPECIFICATION

Applicant: HANMI PHARM. CO., LTD OF **214 MUHA-RO PALTAN-MYEON HWASEONG-SI, GYEONGGI-DO, 445-910, REPUBLIC OF KOREA.** Request permission to amend the specification of letters patent no: **2014/05583** of **29 JULY 2014** for **THIENO[3,2-D]PYRIMIDINE DERIVATIVES HAVING INHIBITORY ACTIVITY FOR PROTEIN KINASES**

A copy of the original specification on which the proposed amendment is indicated in red, is now available for public inspection at the Patent Office.

Any notice of opposition (on Patent Form 19) must be lodged at the Patent Office within two months from the date hereof.

Registrar of Patents

Applicant: SUZHOU RIBO LIFE SCIENCE CO., LTD 168 YUANFENG ROAD, YUSHAN TOWN, KUNSHAN, JIANGSU 215300, CHINA. Request permission to amend the specification of letters patent no: **2020/03833** of **24 JUNE 2020** for **CONJUGATES AND PREPARATION AND USE THEREOF.**

A copy of the original specification on which the proposed amendment is indicated in red, is now available for public inspection at the Patent Office.

Any notice of opposition (on Patent Form 19) must be lodged at the Patent Office within two months from the date hereof.

Registrar of Patents

Applicant: NOKIA TECHNOLOGIES OY KARAKAARI 7, 02610 ESPOO, FINLAND. Request permission to amend the specification of letters patent no: **2019/02530** of **23 APRIL 2019** for **RADIO BEARER SWITCHING IN RADIO ACCESS**.

A copy of the original specification on which the proposed amendment is indicated in red, is now available for public inspection at the Patent Office.

Any notice of opposition (on Patent Form 19) must be lodged at the Patent Office within two months from the date hereof.

Registrar of Patents

Applicant: NOVO NORDISK A/S Novo Alle, 2880 Bagsvaerd. Request permission to amend the specification of letters patent no: **2007/07261** of **28/08/2007** for **ACYLATED GLP-1 COMPOUNDS.**

A copy of the original specification on which the proposed amendment is indicated in red, is now available for public inspection at the Patent Office.

Any notice of opposition (on Patent Form 19) must be lodged at the Patent Office within two months from the date hereof.

Registrar of Patents

Applicant: COCHRANE STEEL PRODUCTS (PTY) LIMITED 125 Fitter Road, Spartan 1619 Kempton Park. Request permission to amend the specification of letters patent no: **21/02/2017** of **2017/01282** for **BARRIER.**

A copy of the original specification on which the proposed amendment is indicated in red, is now available for public inspection at the Patent Office.

Any notice of opposition (on Patent Form 19) must be lodged at the Patent Office within two months from the date hereof.

Registrar of Patents

Applicant: TAIGEN BIOTECHNOLOGY CO., LTD. 7F, 138 Shin Ming Rd. Neihu District, Taipei 114. Request permission to amend the specification of letters patent no: **2020/02037** of **04 MAY 2020** for **CAP-DEPENDENT ENDONUCLEASE INHIBITORS**.

A copy of the original specification on which the proposed amendment is indicated in red, is now available for public inspection at the Patent Office.

Any notice of opposition (on Patent Form 19) must be lodged at the Patent Office within two months from the date hereof.

Registrar of Patents

Applicant: NOKIA TECHNOLOGIES OY KARAKAARI 7, 02610 ESPOO, FINLAND. Request permission to amend the specification of letters patent no: **2020/02126** of **04 MAY 2020** for **SESSION CONTEXT CONVERSION**.

A copy of the original specification on which the proposed amendment is indicated in red, is now available for public inspection at the Patent Office.

Any notice of opposition (on Patent Form 19) must be lodged at the Patent Office within two months from the date hereof.

Registrar of Patents

INSPECTION OF SPECIFICATIONS

A complete specification may, after acceptance is advertised, be inspected during office hours at the Patent Office, Pretoria, at a charge of **R4, 00.** Please note, that in terms of section 43 (3) if the acceptance of an application which claims priority in terms of section 31 (1) (c) is not published in terms of section 42 within 18 months from the earliest priority claimed from the relevant application in a convention country, it shall be opened to public inspection after the expiration of 18 months from the earliest priority so claimed.

COPIES OF DOCUMENTS

The Patent Office, Private Bag X400, Pretoria, supplies copies of all patent and trade mark documents at the following rate:

Photocopies: **R1, 00 per page**

COMPLETE SPECIFICATIONS ACCEPTED AND ABRIDGEMENTS OR ABSTRACTS THEREOF

Complete specifications in respect of the under mentioned applications for letters Patent have been accepted by the Registrar of Patents.

THE PATENTS ACT, 1978 (ACT NO. 57 OF 1978)

In terms of section 42 (b) of the Patents Act, 1978, a patent shall be deemed to have been sealed and granted as from the date of publication of the acceptance.

The numerical references denote the following: **(21)** Number of application. **(22)** Date of application. **(DA)** Date of acceptance. **(51)** Class. **(71)** Name of applicant(s). **(72)** Name of all inventors. **(33)** Country. **(31)** Number and **(32)** Date of convention application. **(54)** Title of invention. **(00)** Number of sheets.

Registrar of Patents

21: 2013/00697. 22: 2013/01/25. 43: 2023/08/02
51: H04B; H04J
71: SUN PATENT TRUST
72: MURAKAMI, Yutaka, KIMURA, Tomohiro, OUCHI, Mikihiro
33: JP 31: 2010-234061 32: 2010-10-18
54: TRANSMISSION METHOD, TRANSMISSION DEVICE, RECEPTION METHOD, AND RECEPTION DEVICE
00: -
A precoding method that generates a plurality of precoded signals from a plurality of baseband signals, said precoded signals being transmitted in the same frequency band at the same time. One matrix is selected from among N matrices (F[i], with i = 0, 1, 2, …, N) for the aforementioned plurality of baseband signals, and a first precoded signal (z1) and second precoded signal (z2) are generated. A first encoded block and second encoded block are generated using a prescribed error-correction-block encoding scheme. One M-symbol baseband signal is generated from the first encoded block and another from the second encoded block. Then, a precoding process is performed on the combination of the baseband signal generated from the first encoded block and the baseband signal generated from the second encoded block, thereby generating an M-slot precoded signal.

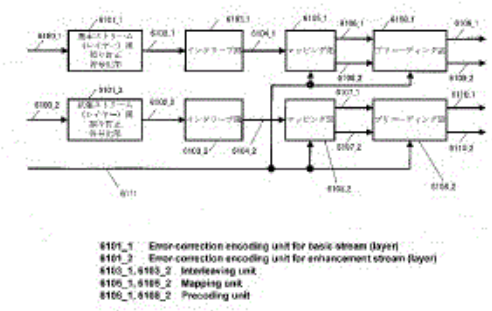

21: 2014/06369. 22: 2014/08/29. 43: 2023/09/07
51: A61K; A61P
71: VANDA PHARMACEUTICALS INC.
72: PHADKE, Deepak, WOLFGANG, Curt, D., POLYMEROPOULOS, Mihael, H., FEENEY, John, Joseph, BIRZNIEKS, Gunther
33: US 31: 61/610,664 32: 2012-03-14
54: AN ILOPERIDONE METABOLITE FOR USE IN THE TREATMENT OF PSYCHIATRIC DISORDERS
00: -
R-P88 is used for the treatment of disorders amenable to treatment with an atypical antipsychotic.

21: 2014/08080. 22: 2014/11/04. 43: 2023/08/02
51: G06F
71: International Business Machines Corporation
72: GREINER, Dan, SLEGEL, Timothy, JACOBI, Christian, RELSON, Peter Jeremy, PHILLEY, Randall William
33: US 31: 13/524,871 32: 2012-06-15
54: PROCESSOR ASSIST FACILITY
00: -
An operation is provided to signal a processor that action is to be taken to facilitate execution of a transaction that has aborted one or more times. The operation is specified within an instruction or is itself an instruction. The instruction is executed based on detecting an abort of the transactions, and includes a field indicating how many times the transaction has aborted. The processor uses this information to determine what action is to be taken.

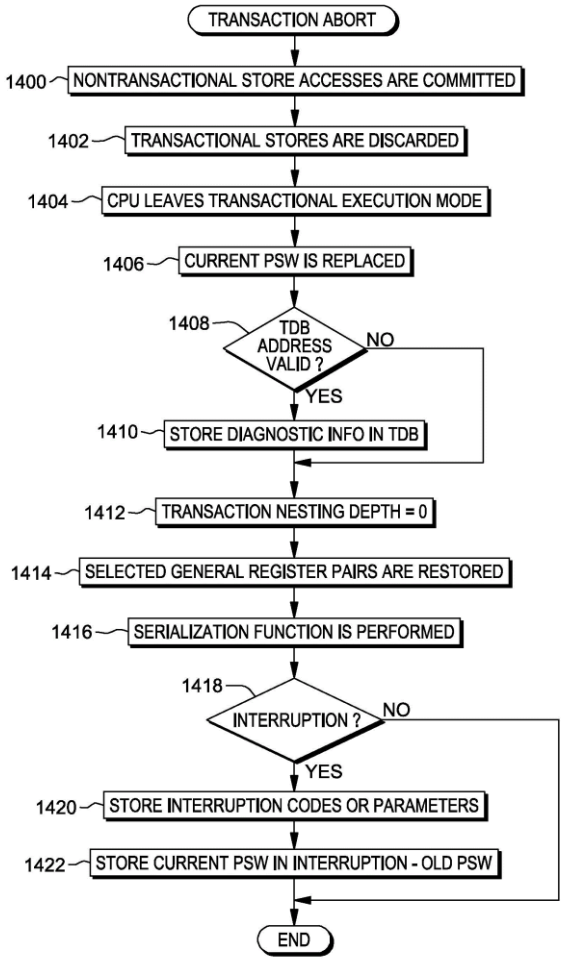

21: 2015/02327. 22: 2015/04/08. 43: 2018/09/05
51: H02K; H02P
71: GIULIANO RES
72: Giuliano RES
33: AU 31: 2014901266 32: 2014-04-08
54: SELF EXCITING ALTERNATOR CIRCUIT
00: -
The invention discloses an alternator having a voltage boosting circuit driven by at least two stator winding conductors. The output of the voltage boosting circuit is connected to a signal conditioning circuit which adjusts the voltage boosting signal to deliver a suitable signal to turn on a current controller. The current controller controls the current through a field coil which produces a magnetic field. The magnetic field induces a corresponding electric current in the stator windings due to the spinning of the rotor. The alternator further comprises a rectifier circuit for rectifying and smoothing the stator windings output.

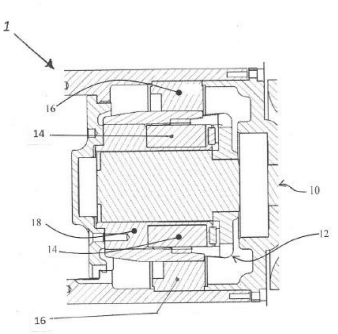

21: 2015/07732. 22: 2015/10/15. 43: 2023/08/16
51: A23D; C11B; A23P; A23L
71: COMMONWEALTH SCIENTIFIC AND INDUSTRIAL RESEARCH ORGANISATION
72: SANGUANSRI, LUZ, AUGUSTIN, MARY ANN, SHEN, ZHIPING
33: AU 31: 2013901379 32: 2013-04-19
54: ENCAPSULATION METHOD
00: -
A method of preparing an encapsulated phospholipid oil-in-water emulsion comprising: preparing an oil-in-water pre-emulsion comprising a phospholipid-containing oil and mixing the oil-in-water pre-emulsion with an encapsulant material.

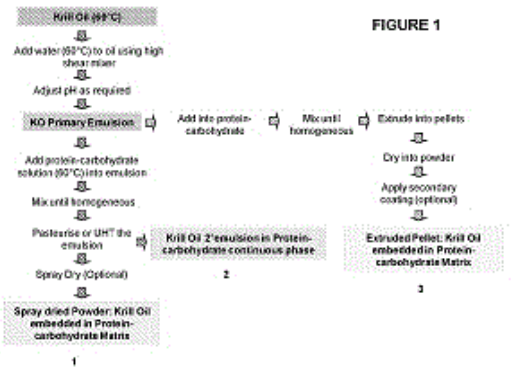

FIGURE 1

21: 2015/08924. 22: 2015/12/07. 43: 2023/09/15
51: A61K
71: BOEHRINGER INGELHEIM VETMEDICA GMBH
72: AVEN, MICHAEL, LUKAS, TIM
33: EP 31: 13177268.3 32: 2013-07-19
54: PRESERVED ETHERIFIED CYCLODEXTRIN DERIVATIVES CONTAINING LIQUID AQUEOUS PHARMACEUTICAL COMPOSITION
00: -
The present invention is directed to a preserved liquid aqueous pharmaceutical composition comprising one or more etherified cyclodextrin derivatives; one or more water-soluble preservatives; preferably selected from the group consisting of sorbic acid or salts thereof, preferably sodium sorbate, potassium sorbate, calcium sorbate; benzoic acid or salts thereof, preferably sodium benzoate; benzalkonium chloride; benzethonium chloride; cetylpyridinium chloride; sodium metabisulfite; sodium acetate; parabenes and salts thereof, preferably methylparabene, ethylparabene, propylparabene, butylparabene, butylparabene sodium; or combinations thereof; and at least one pharmaceutically active compound which is poorly water-soluble, very poorly water-soluble or water-insoluble. The liquid aqueous pharmaceutical composition provides an acceptable solubility of the pharmaceutically active compound, such as pimobendan, in aqueous solution whereby the water- soluble preservatives retain their effectiveness in the presence of the etherified cyclodextrin derivatives allowing the use in an oral administration form.

21: 2016/05657. 22: 2016/08/16. 43: 2023/09/29
51: A61K; C12N; A61P
71: NOVARTIS AG, THE TRUSTEES OF THE UNIVERSITY OF PENNSYLVANIA
72: BROGDON, Jennifer, BYRD, John, DUBOVSKY, Jason, FRAIETTA, Joseph, GILL, Saar, GLASS, David, JOHNSON, Amy, JUNE, Carl, H., KENDERIAN, Saad, MANNICK, Joan, MAUS, Marcela, MURPHY, Leon, MUTHUSAMY, Natarajan, PORTER, David L., RUELLA, Marco, SELLERS, William Raj, WASIK, Mariusz
33: US 31: 61/976,396 32: 2014-04-07
33: US 31: 62/007,309 32: 2014-06-03
33: US 31: 62/036,493 32: 2014-08-12
33: US 31: 62/076,238 32: 2014-11-06
33: US 31: 62/087,888 32: 2014-12-05
33: US 31: 62/097,278 32: 2014-12-29
54: TREATMENT OF CANCER USING ANTI-CD19 CHIMERIC ANTIGEN RECEPTOR
00: -
The invention provides compositions and methods for treating diseases associated with expression of CD19, e.g., by administering a recombinant T cell comprising the CD19 CAR as described herein, in combination with a kinase inhibitor, e.g., a kinase inhibitor described herein. The invention also provides kits and compositions described herein.

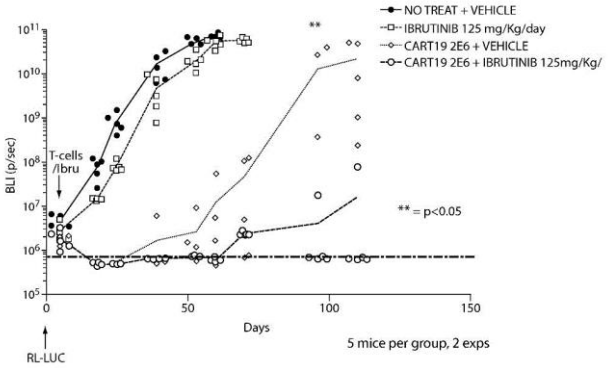

21: 2017/01334. 22: 2017/02/22. 43: 2023/08/11
51: A01C; A01N; A01P
71: Novozymes BioAg A/S
72: HABIB, Ahsan, WOODS, Kristi, FRODYMA, Michael, SEMONES, Shawn
33: US 31: 62/027,950 32: 2014-07-23
54: COMPOSITIONS CONTAINING LIPO-CHITOOLIGOSACCHARIDE AND MICROORGANISM FOR ENHANCING PLANT GROWTH
00: -
The application relates to compositions for enhancing plant growth, comprising at least one lipo-chitooligosaccharide (LCO) compound; and one beneficial microorganism selected from

Streptomyces, Trichoderma or Bacillus and optionally further pesticide and to the methods for enhancing plant growth and treating seeds with said compositions.

21: 2017/02974. 22: 2017/04/28. 43: 2023/08/04
51: F25C
71: ICEBREAKER NORDIC ApS
72: JENSEN, Kim
33: DK 31: PA201470615 32: 2014-10-06
33: DK 31: PA201470616 32: 2014-10-06
33: DK 31: PA201470617 32: 2014-10-06
33: DK 31: PA201470618 32: 2014-10-06
33: DK 31: PA201470619 32: 2014-10-06
54: ICE CUBE PRODUCING UNIT
00: -
An ice cube producing unit (1) comprising an ice cube tray (5, 5a, 5b) having at least two ice cube compartments, a lid (6a, 6b) which is suitable for being mounted on the tray to seal water or other liquid inside said at least two ice cube compartments. Said ice cube producing unit (1) further comprises a displacing arrangement connecting the tray and the lid and having two positions: a first position where the lid is held in a position where it abuts the ice cube tray to seal the contents of the at least two ice cube compartments inside the compartments and a second position where the lid (6a, 6b) is held in a position where it is separated from the tray (5, 5a, 5b) so that ice cubes formed in the tray can leave the tray.

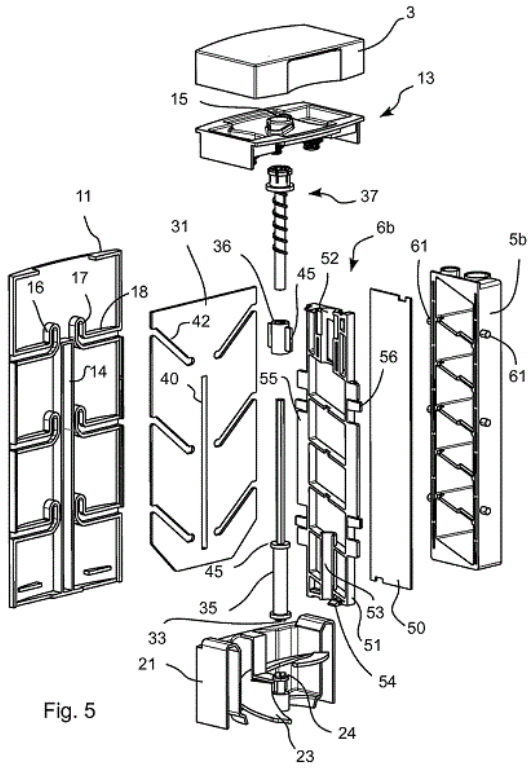

Fig. 5

21: 2017/03409. 22: 2017/05/17. 43: 2023/09/07
51: A61K
71: CONCENTRIC ANALGESICS, INC.
72: HUSFELD, Craig, DONOVAN, John F.
33: US 31: 62/084,515 32: 2014-11-25
33: US 31: 14/743,375 32: 2015-06-18
54: PRODRUGS OF PHENOLIC TRPV1 AGONISTS
00: -
Described herein are compounds, pharmaceutical compositions and medicaments that include such compounds, and methods of using such compounds to modulate transient receptor potential vanilloid 1 receptor (TRPV1) activity.

21: 2017/04338. 22: 2017/06/26. 43: 2023/06/21
51: C07D
71: PHARMACYCLICS LLC, JANSSEN PHARMACEUTICA NV
72: BENHAIM, Cyril, CHEN, Wei, GOLDMAN, Erick, HORVATH, Andras, PYE, Philip, SMYTH, Mark, S., VERNER, Erik, J.
33: US 31: 62/103,507 32: 2015-01-14
54: SYNTHESIS OF A BRUTON'S TYROSINE KINASE INHIBITOR
00: -

Described herein is the synthesis of Bruton's tyrosine kinase (Btk) inhibitor 1-((R)-3(4-amino-3 -(4-phenoxyphenyl)- 1H-pyrazolo [3,4-d]pyrimidin-1-yl)piperidin-1-yl)prop-2-en-1-one.

21: 2017/04903. 22: 2017/07/19. 43: 2023/09/18
51: C12N
71: PROTALIX LTD.
72: CHEN ZELTSBURG, Lilach, RUDERFER, Ilya, SHULMAN, Avidor, FUX, Liat, UGORTSEV, Yulia, NETA, Hagit, GELLEY, Sivan, LAVEE LAVIAD, Elad, SHAALTIEL, Yoseph
33: US 31: 62/099,565 32: 2015-01-04
33: US 31: 62/099,560 32: 2015-01-04
33: US 31: 62/163,497 32: 2015-05-19
33: US 31: 62/169,724 32: 2015-06-02
33: US 31: 62/247,856 32: 2015-10-29
54: MODIFIED DNASE AND USES THEREOF
00: -
Modified DNase I protein in which one or more amino acids of a DNase I protein are modified non-cellularly, are provided. The modified DNase I protein exhibits a DNA hydrolytic activity in the presence of actin and an improved DNA hydrolytic activity compared to a homologous non-modified DNase I protein. Processes of preparing the modified DNase I protein and uses thereof in, for example, reducing a DNA content in sputum and/or in treating a disease or condition associated with excess extracellular DNA in a fluid, secretion or tissue of a subject, are also provided.

21: 2017/06790. 22: 2017/10/09. 43: 2023/07/31
51: A23N
71: JANON TRADING (PTY) LTD
72: BERLEIN, Antony Walter, HARWOOD, Geoffrey Peter
33: ZA 31: 2015/01130 32: 2015-03-11
54: APPARATUS AND METHOD FOR CRACKING STONE FRUIT NUTS
00: -
Disclosed is an apparatus and method for cracking stone fruit nuts. The apparatus comprises a frame (2) supporting a set of spaced apart jaw comprising a first jaw (4) and a second jaw (5) defining between them a gap (6), which is tapered down from the inlet (7) to the outlet (8). The first jaw (4) is adjustably secured to the frame (2) for adjustment of the size of the gap (6). The second jaw (5) is movably supported by the frame (2) and secured to drive means configured to rotatably move the second jaw (5) relative to the first jaw (4) with a tangential motion resulting in the continuously change of the size of the gap (6). To crack the shell, the stone fruit nut is located between the jaws and repeatedly pressed and rolled between the jaws from the inlet (7) to the outlet (8).

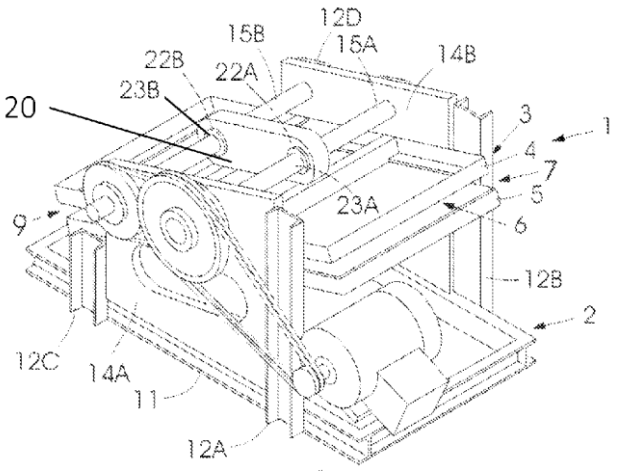

21: 2017/07152. 22: 2017/10/20. 43: 2023/08/16
51: C07D
71: SOUND AGRICULTURE COMPANY
72: BAYER, TRAVIS SCOTT, DAVIDSON, ERIC ALAN, HLEBA, YONEK
33: US 31: 62/152,555 32: 2015-04-24
33: US 31: 62/152,100 32: 2015-04-24
54: METHODS FOR HYDRAULIC ENHANCEMENT OF CROPS
00: -
Disclosed herein are compounds, salts, solvates of Formula (1), and any formulation thereof. Also disclosed are methods of eliciting hydraulic enhancement and/or increasing yield of a plant by contacting a plant with compounds, salts, solvates of Formula (1), or any formulation thereof.

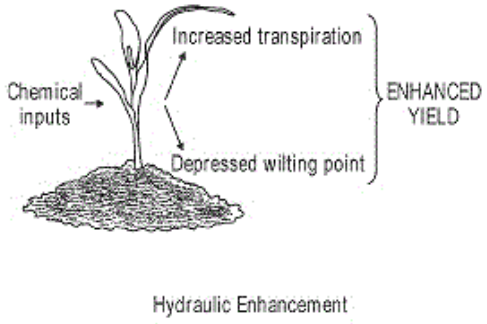

Hydraulic Enhancement

21: 2017/07500. 22: 2017/11/06. 43: 2023/08/11
51: C40B; G06F
71: UNIVERSITY OF UTAH RESEARCH FOUNDATION
72: FLYGARE, STEVEN, SIMMON, KEITH, MILLER, CHASE, QIAO, YI, EILBECK, KAREN, MARTH, GABOR, YANDELL, MARK, SCHLABERG, ROBERT, OSBORNE, EDWARD J
33: US 31: 62/152,782 32: 2015-04-24
54: METHODS AND SYSTEMS FOR MULTIPLE TAXONOMIC CLASSIFICATION
00: -
Described herein are methods of identifying a plurality of polynucleotides, as well as detecting presence, absence, or abundance of a plurality of taxa in a sample. Also provided are systems for performing methods of the disclosure.

21: 2017/07645. 22: 2017/11/10. 43: 2023/08/23
51: C07K; A61K; A61P
71: CYTOMX THERAPEUTICS, INC.
72: SAGERT, JASON GARY, TIPTON, KIMBERLY ANN, TERRETT, JONATHAN ALEXANDER, SINGH, SHWETA, WEAVER, ANNIE YANG, DESNOYERS, LUC ROLAND
33: US 31: 62/257,321 32: 2015-11-19
33: US 31: 62/277,775 32: 2016-01-12
33: US 31: 62/315,276 32: 2016-03-30
33: US 31: 62/310,553 32: 2016-03-18
33: US 31: 62/257,484 32: 2015-11-19
33: US 31: 62/156,838 32: 2015-05-04
54: ANTI-CD71 ANTIBODIES, ACTIVATABLE ANTI-CD71 ANTIBODIES, AND METHODS OF USE THEREOF
00: -
The invention relates generally to antibodies that bind CD71, activatable antibodies that specifically bind to CD71 and methods of making and using these anti-CD71 antibodies and anti-CD71 activatable antibodies in a variety of therapeutic, diagnostic and prophylactic indications.

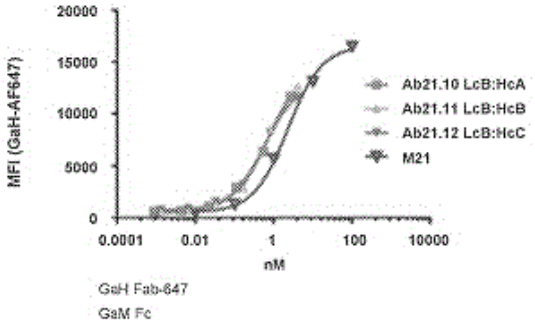

GaH Fab-647
GaM Fc

21: 2017/07673. 22: 2017/11/13. 43: 2023/08/01
51: A01N; C02F
71: Innovative Water Care, LLC
72: HANI, Rahim, SWEENY, Philip Gerdon, AKANDE, Janet
33: US 31: 62/161,352 32: 2015-05-14
54: SLOW DISSOLVING HYPOCHLORITE CONTAINING TABLET
00: -
It has now been discovered that forming a shaped article from a blend of calcium hypochlorite and lime, wherein the lime content is greater than 10% by weight, based on the total weight of the shaped article, the resulting solid shaped article has a favorable dissolution (solubility) profile and the solid shaped article maintains structural integrity during use in an aqueous environment.

21: 2017/07869. 22: 2017/11/20. 43: 2023/08/11
51: A61K; A61P; C07K
71: SEAGEN INC.
72: LEWIS, TIMOTHY, WESTENDORF, LORI, SUSSMAN, DJANGO, LAW, CHE-LEUNG
33: US 31: 62/186,596 32: 2015-06-30
33: US 31: 62/321,849 32: 2016-04-13
54: ANTI-NTB-A ANTIBODIES AND RELATED COMPOSITIONS AND METHODS
00: -
Disclosed are antibodies, including antibody drug conjugates, that specifically bind to NTB-A. Also disclosed are methods for using the anti-NTB-A antibodies to detect or modulate activity of (e.g., inhibit proliferation of) an NTB-A-expressing cell, as well as for diagnoses or treatment of diseases or disorders (e.g., cancer) associated with NTB-A-

expressing cells, such as multiple myeloma, non-Hodgkin lymphoma and acute myeloid leukemia.

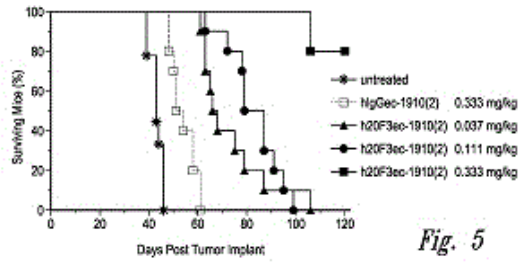

Fig. 5

21: 2017/08420. 22: 2017/12/12. 43: 2023/08/11
51: F16G
71: MLT Minet Lacing Technology
72: JAKOB, Horst
33: FR 31: 15/01342 32: 2015-06-25
54: CLIPS FOR JOINTING DEVICES OF THE ENDS OF A CONVEYOR BELT
00: -
The invention relates to clips (1) which comprise a generally U-shaped part intended for being attached so as to straddle one end of a conveyor belt with the curved front portion - or nose (1') - of the clip projecting beyond same. A tube (3) intended for being attached in the front concave portion (1'') of each clip comprises, attached to the side ends thereof, two flanges (4') of a bracket (4). Said flanges (4') are joined at the rear by a linking portion (4''). The flanges are attached by threading bores (4'b) on the side ends of the tube (3). The arms (2', 2'') of the clips are provided with through-holes (7) intended for rod attachment means (5). The arms (2', 2'') of every second clip are of different lengths.

Fig. 1

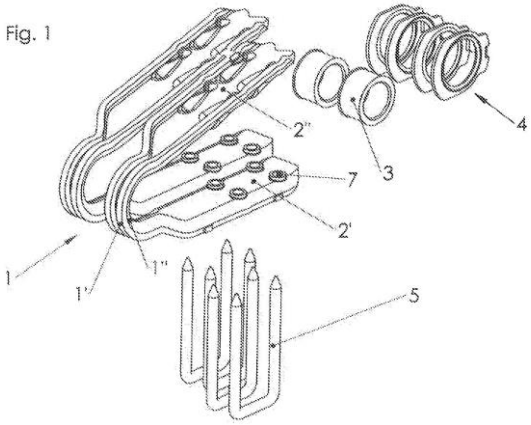

21: 2018/00056. 22: 2018/01/04. 43: 2023/08/16
51: A61K; C07H
71: Elysium Health, Inc.
72: MARCOTULLI, Eric Alexander, ALMINANA, Daniel Antonio, BOWEN, Paul Michael
33: US 31: 62/173,733 32: 2015-06-10
54: NICOTINAMIDE RIBOSIDE AND PTEROSTILBENE COMPOSITIONS AND METHODS FOR TREATMENT OF SKIN DISORDERS
00: -
Compositions containing a combination of nicotinamide riboside and pterostilbene for treating skin disorders, and methods of treating skin disorders using these compositions and their equivalents are described. The skin disorders that are treated using these compositions or methods include sun exposure-related skin disorders, inflammatory skin disorders, autoimmune disease-related skin disorders and cancer-related skin disorders. In one embodiment, the compositions containing a combination of nicotinamide riboside and pterostilbene are prepared as oral formulations.

21: 2018/00194. 22: 2018/01/10. 43: 2023/08/16
51: A01M; A01N; A01P
71: The New Zealand Institute for Plant and Food Research Limited
72: EL-SAYED, Ashraf M.
33: NZ 31: 709050 32: 2015-06-11
54: COMPOSITION AND SYSTEM FOR ATTRACTING LEPIDOPTEROUS INSECTS
00: -
The invention relates to a composition for attracting Lepidopterous insects comprising a vapour blend of acetic acid and one or more compounds of formula

(I), (I) wherein R is selected from the group comprising -CH_2OH, -CN, -NC, and -OH; and to methods of using the composition to attract, detect, survey, monitor and/or control Lepidopterous insects.

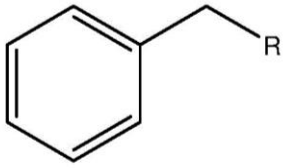

I

21: 2018/00215. 22: 2018/01/11. 43: 2023/09/21
51: C12N; C12P
71: FERMENTALG, ADISSEO FRANCE SAS
72: CAGNAC, Olivier, ROLS, Cyril, PAGLIARDINI, Julien, CALLEJA, Pierre, GADY, Cécile, VANDEPLAS, Sabrina
33: FR 31: 1556791 32: 2015-07-17
54: PROTEIN-RICH BIOMASS OF THRAUSTOCHYTRIDS, CULTURING METHOD AND USES
00: -
The invention is in the field of cultures of microalgae, in particular thraustochytrids. The invention relates to a protein-rich biomass of thraustochytrids, to a method of obtaining said biomass, and to the uses thereof.

21: 2018/01676. 22: 2018/03/12. 43: 2023/08/01
51: H04L
71: Huawei Technologies Co., Ltd.
72: LIN, Meilu, GAN, Ming, LIU, Le, ZHU, Jun, YU, Jian
33: CN 31: 201510555654.5 32: 2015-09-01
54: METHOD AND APPARATUS FOR TRANSMITTING WIRELESS LOCAL AREA NETWORK INFORMATION
00: -
Provided is a method for sending a wireless local area network packet structure, comprising: determining a packet structure, with the packet structure comprising an HE-SIGA and an HE-SIGB and the HE-SIGA including indication information, wherein when a current transmission mode is MU-MIMO transmission of the whole bandwidth, the indication information is used for indicating the number of scheduled users, and in other transmission modes, the indication information is used for indicating the number of symbols of the HE-SIGB; and sending the packet structure.



AA SIGA: NON-OFDMA/THE NUMBER OF SCHEDULED USERS BEING FOUR
BB STA1 SCHEDULING INFORMATION
CC STA2 SCHEDULING INFORMATION
DD STA3 SCHEDULING INFORMATION
EE STA4 SCHEDULING INFORMATION
FF HE-STF/HE-LTF/FOUR-USER MU-MIMO

图 13

21: 2018/03002. 22: 2018/05/08. 43: 2023/08/16
51: A01N
71: CORTEVA AGRISCIENCE LLC
72: BATRA, ASHISH, ADRIAN, DAVID J, BOUCHER, RAYMOND E, HERCAMP, JOSEPH C, DAVE, HITESHKUMAR, SHEN, HAO
54: SOLID HERBICIDE COMPOSITIONS CONTAINING FLUROXYPYR-MEPTYL
00: -
The present disclosure concerns herbicide granules and powders containing a high-load of fluroxypyr-meptyl. The granules exhibit good storage stability and good herbicidal efficacy when added to water and applied by spray application to control unwanted plant growth.

21: 2018/03243. 22: 2018/05/16. 43: 2023/08/18
51: B01D
71: METSO OUTOTEC FINLAND OY
72: VÄNTTINEN, KARI, JUVONEN, ISMO, HINDSTRÖM, ROLF, EKBERG, BJARNE, ILLI, MIKA, VROMAN, EDWARD, SIMOLA, LAURA, HÖGNABBA, OLLI
54: FILTER ELEMENT FOR A FILTER APPARATUS
00: -
A filter element (1) for a filter apparatus (2) comprises at least one filter member (3)and a frame member (4) arranged to support the at least one filter member (3) in such a manner that the internal cavity (12) is formed. The filter member (3) comprises a permeable membrane layer and has a first filter surface (9a) for receiving a pressure and directed towards an internal cavity (12) arranged inside the filter element (1), and a second filter surface (9b) for receiving solid particles filtered from a feed. The filter member (3) forms a capillary filter.

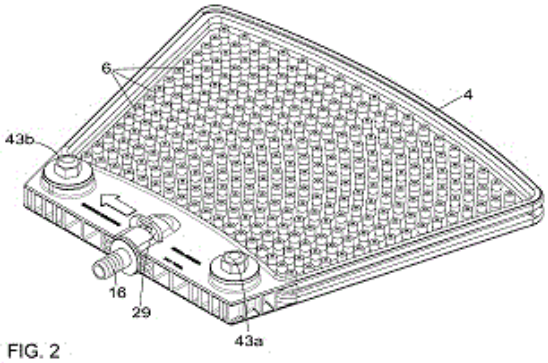

FIG. 2

21: 2018/03475. 22: 2018/05/25. 43: 2023/08/02
51: A01N; A01P; C07D
71: Bayer CropScience Aktiengesellschaft
72: FISCHER, Rüdiger, HAGER, Dominik, HOFFMEISTER, Laura, KAUSCH-BUSIES, Nina, WILCKE, David, WILLOT, Matthieu, GÖRGENS, Ulrich, ILG, Kerstin, MOSRIN, Marc, PORTZ, Daniela, TURBERG, Andreas
33: EP(DE) 31: 15191440.5 32: 2015-10-26
54: CONDENSED BICYCLIC HETEROCYCLE DERIVATIVES AS PEST CONTROL AGENTS
00: -
The invention relates to novel compounds of formulae (I) or (Γ) (formula I, II) wherein R^1, R^2, R^3, Aa, Ab, Ac, Ad, Ae, Q and n have the meanings indicated in the description, to the use thereof as acaricides and/or insecticides for controlling animal pests, and to methods and intermediate products for the production thereof.

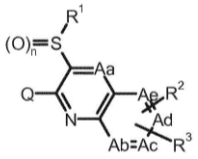
(I)

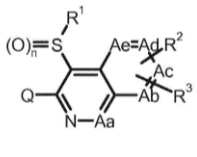
(I')

21: 2018/04189. 22: 2013/12/04. 43: 2023/08/11
51: A61M
71: MALLINCKRODT HOSPITAL PRODUCTS IP LIMITED
72: FLANAGAN, Craig, FREED, Simon, KLAUS, John, KOHLMANN, Thomas, MEGLASSON, Martin, D., NAIDU, Manesh, SHAH, Parag
33: US 31: 61/733,134 32: 2012-12-04
33: US 31: 61/784,238 32: 2013-03-14
33: US 31: 61/856,367 32: 2013-07-19
54: CANNULA FOR MINIMIZING DILUTION OF DOSING DURING NITRIC OXIDE DELIVERY
00: -
The present invention generally relates to, amongst other things, systems, devices, materials, and methods that can improve the accuracy and/or precision of nitric oxide therapy by, for example, reducing the dilution of inhaled nitric oxide (NO). As described herein, NO dilution can occur because of various factors. To reduce the dilution of an intended NO dose, various exemplary nasal cannulas, pneumatic configurations, methods of manufacturing, and methods of use, etc. are disclosed.

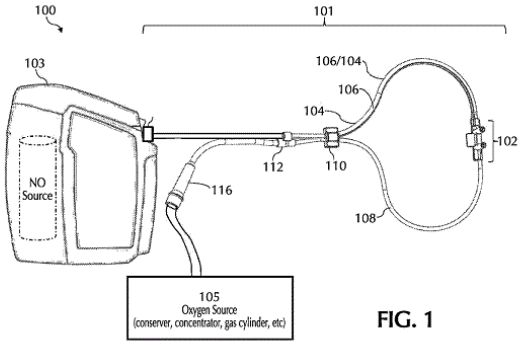

FIG. 1

21: 2018/04829. 22: 2018/07/18. 43: 2023/09/27
51: C07K
71: AMGEN RESEARCH (MUNICH) GMBH
72: Tobias RAUM, Markus MUENZ, Johannes BROZY, Peter KUFER, Patrick HOFFMANN, Matthias FRIEDRICH, Benno RATTEL, Pamela BOGNER, Andreas WOLF, Cornelius POMPE
33: US 31: 62/290,875 32: 2016-02-03
54: PSMA AND CD3 BISPECIFIC T CELL ENGAGING ANTIBODY CONSTRUCTS
00: -
The present invention provides bispecific antibody constructs of a specific Fc modality characterized by comprising a first domain binding to PSMA, a second domain binding to an extracellular epitope of the human and the Macaca CD3 E chain and a third domain, which is the specific Fc modality. Moreover, the invention provides a polynucleotide, encoding the antibody construct, a vector comprising this polynucleotide, host cells, expressing the construct and a pharmaceutical composition comprising the same.

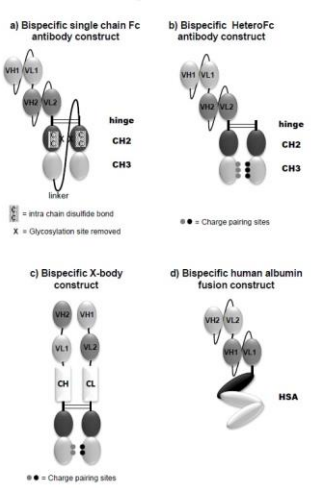

21: 2018/05009. 22: 2018/07/25. 43: 2023/08/16
51: A01C; A01N; A01P; C09D; C12N; C12R
71: Novozymes BioAg A/S, Monsanto Technology LLC
72: GREENSHIELDS, Dave, MARTIN, Vincent, SELNESS, Shaun Raj, HAN, Hui
33: US 31: 62/271,857 32: 2015-12-28
54: STABLE INOCULANT COMPOSITIONS AND METHODS FOR PRODUCING SAME
00: -
The present disclosure provides non-aqueous inoculant compositions and methods for enhancing the survival and/or stability of microbial spores in an inoculant composition. In some embodiments, inoculant compositions of the present disclosure comprise microbial spores, one or more dispersants, one or more protectants and a non-aqueous liquid carrier

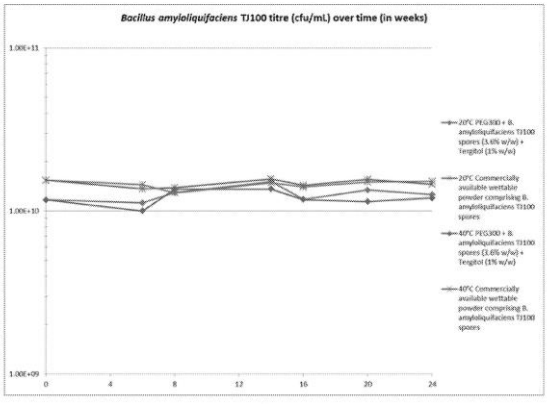

21: 2018/06566. 22: 2018/10/03. 43: 2023/08/22
51: B63B; F03B
71: Novige AB
72: SKJOLDHAMMER, Jan
33: SE 31: 1650352-6 32: 2016-03-16
54: FLOATING PLATFORM
00: -
A floating platform for a wave energy converter (WEC), comprising a hollow body, in which energy converting machinery may be positioned. The floating platform has an underside facing the water in use, an upper side facing the opposite direction and a first long-side forming a front and a second long-side forming a back, and two short-sides, at least one aligning means is provided, configured to align the front of the floating platform with the wave front, i.e. perpendicular to the direction of the wave, the front of the floating platform is at least 30 m long, the length of the front is at least two times the length of the side, the height of the floating platform is at least 1 m, wherein the floating platform is made up by means of a composite sandwich construction and the platform is configured to work in waves of deep sea shape at a sea depth of more than 1.3 times the highest probable monster wave in the relevant area.

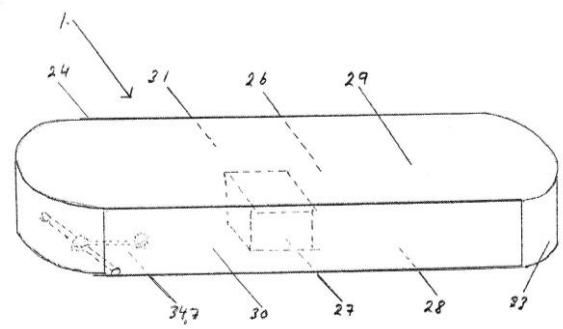

21: 2018/06690. 22: 2018/10/08. 43: 2023/08/17
51: B01J; B01D
71: BASF CORPORATION
72: WEI, XINYI, GERLACH, OLGA, SCHULMAN, EMILY, SUNDERMANN, ANDREAS, ROTH, STANLEY A, AN, LIMIAO
33: CN 31: 201610232574.0 32: 2016-04-14
54: OXIDATION CATALYST FOR LEAN COMPRESSED NATURAL GAS ENGINE
00: -
The present invention provides an oxidation catalyst composition suitable for at least partial conversion of gaseous hydrocarbon emissions, e.g., methane. The oxidation catalyst composition includes at least one platinum group metal (PGM) component supported

onto a porous zirconia-containing material that provides an effect on hydrocarbon conversion activity. The porous zirconia-containing material is at least 90% by weight in the monoclinic phase. Furthermore, the PGM component can comprise at least one platinum group metal in the form of colloidally deposited nanoparticles. The oxidation catalyst composition can be used in the treatment of emissions from lean compressed natural gas engines.

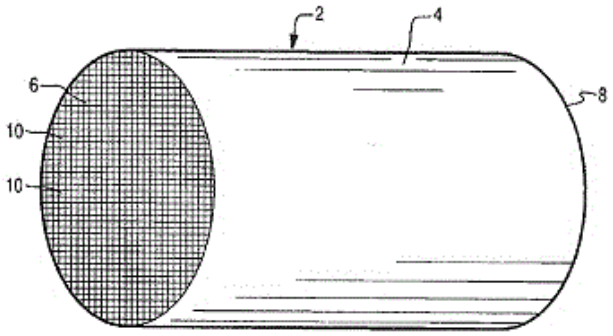

21: 2018/06973. 22: 2018/10/18. 43: 2023/08/17
51: B01J; C01B; C07C; C10L
71: HALDOR TOPSØE A/S
72: MORTENSEN, PETER MØLGAARD, ØSTBERG, MARTIN, DAHL, PER JUUL
33: DK 31: PA 2016 00543 32: 2016-09-16
33: DK 31: PA 2016 00343 32: 2016-06-10
54: CO RICH SYNTHESIS GAS PRODUCTION
00: -
The invention relates to a chemical reactor and reformer tubes for reforming a first feed stream comprising a hydrocarbon gas and steam. The chemical reactor comprises a shell with a heat source and one or more reformer tubes. The reformer tube is arranged to house catalyst material and is arranged to being heated by the heat source. The reformer tube comprises a first inlet for feeding said first feed stream into a first reforming reaction zone of the reformer tube, and a feed conduct arranged to allow a second feed stream into a second re- forming reaction zone of the reformer tube. The second reforming reaction zone is positioned downstream of the first reforming reaction zone. The feed conduct is configured so that the second feed stream is only in contact with catalyst material in the second reforming reaction zone. The invention also relates to a process of producing CO rich synthesis gas at low S/C conditions.

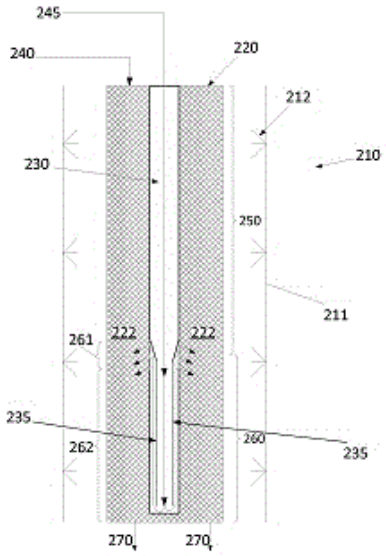

21: 2018/07031. 22: 2018/10/22. 43: 2023/08/17
51: A61K; A61P
71: EAGLE PHARMACEUTICALS, INC.
72: CHEN, FENG-JING, KRILL, STEVEN L, SHMEIS, RAMA ABU
33: US 31: 62/420,555 32: 2016-11-10
33: US 31: 62/332,842 32: 2016-05-06
54: FULVESTRANT FORMULATIONS AND METHODS OF THEIR USE
00: -
The disclosure is directed to fulvestrant formulations including suspensions of fulvestrant particles suitable for injection. The formulations can comprise fulvestrant particles having an LD Dv(10) less than about 3 microns, for example, between about 1 micron to about 3 microns, an LD Dv(50) less than about 35 microns, for example, between about 2 microns and about 35 microns, and an LD Dv(90) less than about 120 microns, for example, between about 4 microns and about 120 microns. The formulations can comprise fulvestrant particles having a CE Dv(90) less than about 200 microns, for example, between about 10 microns and about 200 microns, a CE Dv(50) less than about 60 microns, for example, between about 5 microns and about 60 microns, and a CE Dv(10) less than about 25 microns, for example, between about 1 micron and about 25 microns.

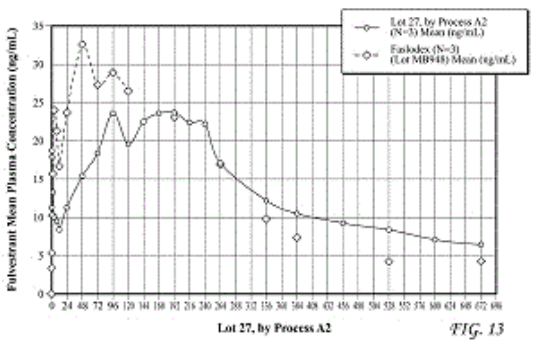

FIG. 13

21: 2018/07214. 22: 2018/10/29. 43: 2023/08/16
51: A61P; G06F; G06N
71: TAKEDA PHARMACEUTICAL COMPANY LIMITED
72: KUCHIMANCHI, KAMESWARA RAO, LOEW-BASELLI, ALEXANDRA, SPOTTS, GERALD, OH, MYUNGSHIN, HALE, MICHAEL DON, WOLFSEGGER, MARTIN
33: US 31: 62/323,015 32: 2016-04-15
54: METHOD AND APPARATUS FOR PROVIDING A PHARMACOKINETIC DRUG DOSING REGIMENT
00: -
Systems and methods for providing a clotting factor VIII (CFVIII) dosing regimen include collecting two blood samples from a patient after an infusion of CFVIII and determining a CFVIII clearance based on the two blood samples, and determining if a patient has a half-life greater than a predetermined threshold. A pharmacokinetic (PK) profile of the patient is determined using a Bayesian model of pharmacokinetic profiles of sampled patients having similar body weight or age of the patient. A first weight is applied to the Bayesian model of pharmacokinetic profiles of sampled patients if the half-life of the patient is greater than the predetermined threshold, and a second weight, less than the first weight, is applied to the Bayesian model of pharmacokinetic profiles of sampled patients if the half-life of the patient is less than the predetermined threshold. A dosing regimen is determined for the patient based on the PK profile.

21: 2018/07393. 22: 2018/11/05. 43: 2023/09/14
51: A61K; A61P
71: UNIVERSITAT BASEL, TORQUR AG
72: HEBEISEN, Paul, FABBRO, Doriano, HILLMANN¿WULLNER, Petra, SELE, Alexander, NGUYEN, Hoa Huu Phuc, LÖSCHER, Wolfgang, BRANDT, Claudia, RAGEOT, Denise, BEAUFILS, Florent
33: EP 31: 16170107.3 32: 2016-05-18
54: TREATMENT OF NEUROLOGICAL DISORDERS
00: -
The present invention is relates to a compound of formula (I), wherein X1, X2 andX3 are, independently of each other, N or CH; with the proviso that at least two of X1X2andX3 areN; Y is N or CH; R1 and R2 are independently of each other (iii)a morpholinyl of formula (II) wherein the arrow denotes the bond in formula (I); and wherein R3 and R4 are independently of each other H, C1-C3alkyl optionally substituted with one or two OH, C1-C2fhioroalkyl, C1-C2alkoxy, C1-C2alkoxyC1-C3alkyl, CN, or C(0)0-C1- C2alkyl; or R3 and R4 form together a bivalent residue -R5R6- selected from Ci-C3alkylene optionally substituted with 1 to 4 F, -CH2-0-CH2-, -CH2-NH-CH2-, or any of the structures wherein the arrows denote the bonds in formula (II); or (iv) a saturated 6-membered heterocyclic ring Z selected from thiomorpholinyl and piperazinyl, optionally substituted by 1 to 3 R7; wherein R7 is independently at each occurrence Ci-C3alkyl optionally substituted with one or two OH, C1-C2fluoroalkyl, C1- C2alkoxyC1-C3alkyl, C3-C6cycloalkyl; or two R7 substituents form together a bivalent residue -R8R9- selected from C1-C3alkylene optionally substituted with 1 to 4 F, -CH2-0-CH2- or -O- CH2CH2-0-; with the proviso that at least one of R1 and R2 is a morpholinyl of formula II; and prodrugs, metabolites, tautomers, solvates and pharmaceutically acceptable salts thereof, for use in the prevention or treatment of a neurological disorder in a subject.

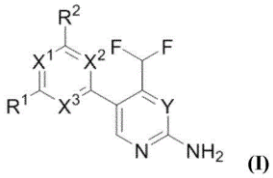
(I)

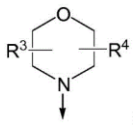
(II)


;

21: 2018/07626. 22: 2018/11/13. 43: 2023/08/16
51: C07K; C12N

71: PRESIDENT AND FELLOWS OF HARVARD COLLEGE
72: DONG, MIN, BARKHO, SULYMAN, TAO, LIANG
33: US 31: 62/336,958 32: 2016-05-16
54: METHOD FOR PURIFICATION AND ACTIVATION OF BOTULINUM NEUROTOXIN
00: -
Disclosed herein are methods for the isolation and purification of a botulinum neurotoxin (BoNT) protein, or a polypeptide comprising a receptor binding domain of BoNT, from a solution. The method comprises contacting the solution containing the protein or polypeptide to a matrix which has attached thereto a non-toxic non-hemagglutinin (NTNHA) under conditions appropriate for binding, washing the matrix to thereby remove unbound materials, and eluting the protein or polypeptide with a solution that dissociates the bound protein from the NTNHA. Conditions appropriate for binding are a pH of less than 7.5 (e.g, 6). Conditions appropriate for dissociation are a pH greater than or equal to 7.5 (e.g., 8). Compositions specific to the methods are also disclosed.

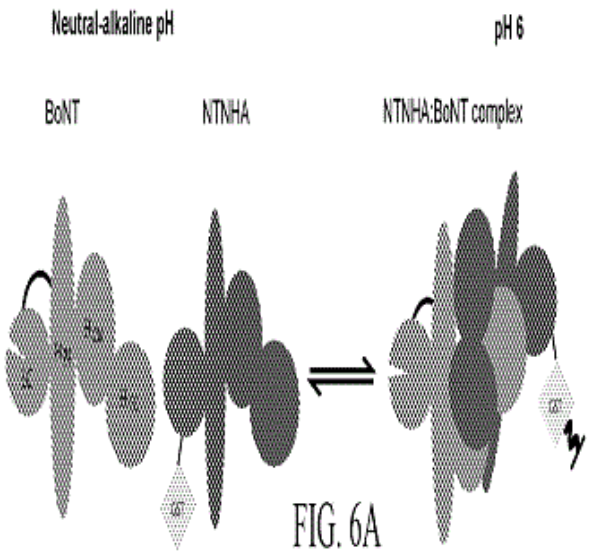

FIG. 6A

21: 2018/07992. 22: 2018/11/26. 43: 2023/08/16
51: A61K
71: CHEMOCENTRYX, INC.
72: MIAO, ZHENHUA, CHARO, ISRAEL
33: US 31: 62/345,086 32: 2016-06-03
54: METHOD OF TREATING LIVER FIBROSIS
00: -
A method of treating liver fibrosis with CCR2 antagonists is provided. The liver fibrosis may be associated with non-alcoholic steatohepatitis (NASH), non-alcoholic fatty liver disease (NAFLD), emerging cirrhosis, non-cirrhotic hepatic fibrosis, type 2 diabetes mellitus (T2DM) or metabolic syndrome (MS).

Figure 1: Change in body weight in HFD/fructose-induced NASH model

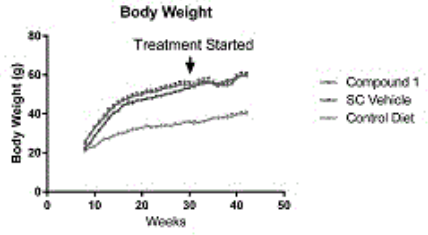

21: 2018/08054. 22: 2018/11/28. 43: 2023/08/11
51: C07D; A61K
71: ORION OPHTHALMOLOGY LLC
72: CHEN, AUSTIN CHIH-YU, GOMEZ, ROBERT, OBALLA, RENATA MARCELLA, POWELL, DAVID ANDREW, ROPPE, JEFFREY ROGER, SEIDERS, THOMAS JON, SHENG, TAO
33: US 31: 62/352,965 32: 2016-06-21
54: ALIPHATIC PROLINAMIDE DERIVATIVES
00: -
This invention is directed to novel aliphatic prolinamide derivatives of Formula I, and pharmaceutically acceptable salts, solvates, solvates of the salt and prodrugs thereof, useful in the prevention (e.g., delaying the onset of or reducing the risk of developing) and treatment (e.g., controlling, alleviating, or slowing the progression of) of age-related macular degeneration (AMD) and related diseases of the eye. These diseases include dry-AMD, wet-AMD, geographic atrophy, diabetic retinopathy, retinopathy of prematurity, polypoidal choroidal vasculopathy, and degeneration of retinal or photoreceptor cells. The invention disclosed herein is further directed to methods of prevention, slowing the progress of, and treatment of dry-AMD, wet-AMD, and geographic atrophy, diabetic retinopathy, retinopathy of prematurity, polypoidal choroidal vasculopathy, and degeneration of retinal or photoreceptor cells, comprising: administration of a therapeutically effective amount of compound of the invention. The compounds of the invention are inhibitors of HTRAl. Thus, the compounds of the

invention are useful in the prevention and treatment of a wide range of diseases mediated (in whole or in part) by HTRAl. The compounds of the invention are also useful for inhibiting HTRAl protease activity in an eye or locus of an arthritis or related condition.

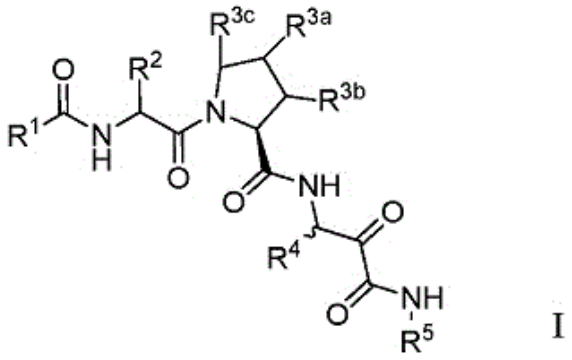

I

21: 2018/08214. 22: 2018/12/05. 43: 2023/08/16
51: C07K
71: UNIVERSITY OF CAPE TOWN
72: MEYERS, ANN ELIZABETH, RYBICKI, EDWARD PETER, HITZEROTH, INGA ISABEL
33: GB 31: 1609235.5 32: 2016-05-25
54: PRODUCTION OF A HORSERADISH PEROXIDASE-IGG FUSION PROTEIN
00: -
The present invention relates to a fusion protein consisting of a scFv linked to a horseradish peroxidase enzyme or to an alkaline phosphatase enzyme by a peptide linker. The fusion protein also includes a histidine tag and optionally an endoplasmic reticulum retention signal. The invention also includes nucleic acids encoding the fusion protein, expression vectors containing the nucleic acids, plant cells transformed with the expression vectors and methods of producing the fusion proteins of the invention.

21: 2018/08537. 22: 2018/12/18. 43: 2023/08/16
51: A61K; A61P
71: INFINITY PHARMACEUTICALS, INC.
72: KUTOK, JEFFERY L
33: US 31: 62/354,637 32: 2016-06-24
54: COMBINATION THERAPIES
00: -
Provided herein are pharmaceutical compositions comprising a phosphatidylinositol 3-kinase inhibitor, or pharmaceutically acceptable form thereof, in combination with a second agent, or a pharmaceutically acceptable form thereof, wherein the second agent is chosen from one or more of 1) a checkpoint modulator, 2) an XPO1 inhibitor, 3) an anti-CD19 antibody, 4) a TLR agonist, 5) a STING agonist, or 6) a Flt3 ligand, or a combination thereof. Also provided herein are methods of treatment comprising administration of the compositions, and uses of the compositions, e.g., for treatment of cancer.

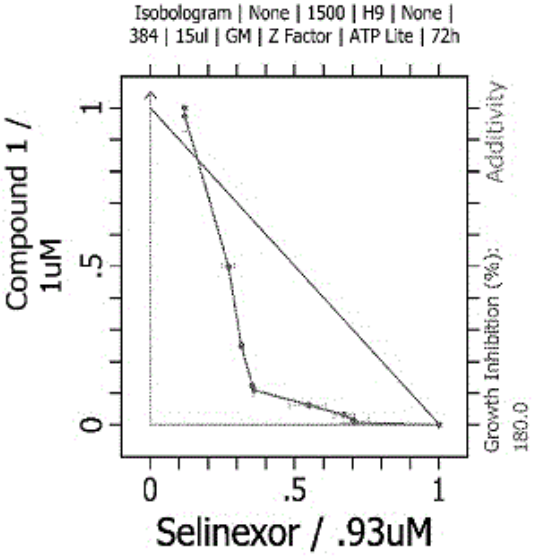

21: 2019/00447. 22: 2019/01/22. 43: 2023/08/04
51: A61K; A61Q
71: Colgate-Palmolive Company
72: MYERS, Carl, BEGUM-GAFUR, Rehana, DUCHEMIN, Katelyn, MUIR, Melissa
33: US 31: 62/373,567 32: 2016-08-11
54: ORAL CARE COMPOSITIONS
00: -
This application provides, among other things, novel aqueous oral care compositions useful for combining and delivering poorly compatible ingredients, for example to deliver effective levels of cationic antibacterial agents in combination with short chain polyphosphate salts that protect against erosion and staining, by addition of a stabilizing amount of an anionic surfactant and methods for making and using the same.

21: 2019/00512. 22: 2019/01/24. 43: 2023/08/04
51: G06F; G06Q; H04W
71: nChain Holdings Limited

72: ALLEN, Gavin
33: GB 31: 1613188.0 32: 2016-07-29
33: GB 31: 1613148.4 32: 2016-07-29
33: GB 31: 1613177.3 32: 2016-07-29

54: BLOCKCHAIN-IMPLEMENTED METHOD AND SYSTEM

00: -

The invention provides a computer-implemented control method and corresponding system. The method may control or influence a device, system or other resource such as a technical process. The invention can provide a mechanism for emulating or otherwise executing the functionality of a logic gate via a computer-based distributed ledger (blockchain). This may be the Bitcoin blockchain or an alternative network/protocol. The invention provides logic embedded within a redeem script such that it determines which particular private keys have been used to sign an unlocking script, and then interprets the provision of those keys in accordance with a predetermined function. In a preferred embodiment, the method may comprise the steps of providing a blockchain Transaction comprising a redeem script for an output, wherein the redeem script: i) specifies a plurality of public keys, each associated with a corresponding private key; and wherein each public key is uniquely associated with a potential state of at least one data source; and ii) comprises logic arranged to provide a result based on which of the plurality of associated private key(s) is used to sign the unlocking script; wherein a minimum number of said private keys must be used to sign an unlocking script of a further blockchain Transaction in order to spend the output. Preferably, the logic is arranged to implement the functionality of a logic gate such as a NOT, AND, OR, NOR, XOR, IMPLY, NAND, NONIMPLY or XNOR gate.

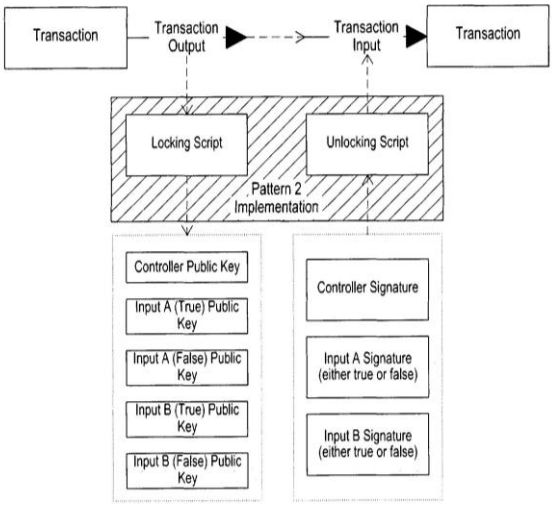

21: 2019/01781. 22: 2019/03/22. 43: 2023/08/16
51: A61K; A61P; C07K; C12N; G01N
71: CCTQ-Akeso (ShangHai) Biomed. Tech. Co., Ltd.
72: LI, Baiyong, XIA, Yu, WANG, Zhongmin Maxwell, ZHANG, Peng
33: CN 31: 201610705763.5 32: 2016-08-23

54: ANTI-PD1 MONOCLONAL ANTIBODY, PHARMACEUTICAL COMPOSITION THEREOF AND USE THEREOF

00: -

An anti-PD1 (programmed cell death 1) monoclonal antibody or an antigen-binding fragment thereof, a pharmaceutical composition thereof and use thereof. The heavy chain variable region of the monoclonal antibody comprises CDRs (complementary determining region) of amino acid sequences as shown in SEQ ID NO:9-11; and/or the light chain variable region of the monoclonal antibody comprises CDRs of amino acid sequences as shown in SEQ ID NO:12-14. The monoclonal antibody can bind to PD1 specifically, relieve immunosuppression of PD1 on an organism specifically and activate T lymphocytes.

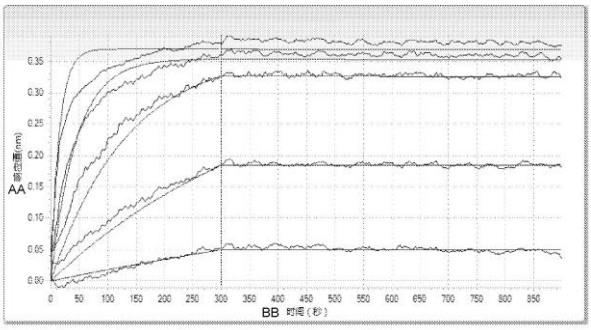

图 2

AA TIME (SECOND)
BB RESPONSE VALUE

21: 2019/01785. 22: 2019/03/22. 43: 2023/08/07
51: A61F
71: Hypothermia Devices, Inc., The Regents of the University of California
72: VERGARA, Julio L., ESTRADA, Daniel, KALRA, Mayank, PADULA, Andrew, CUADRA, Daniel Edward, COHN, Ryan Christopher
33: US 31: 62/400,986 32: 2016-09-28
54: HEAT EXCHANGE MODULE, SYSTEM AND METHOD
00: -
A heat exchange module having a heat transfer fluid channel and a heat transfer plate in heat transfer relation with fluid in the channel. The reference side of a thermoelectric cooler (TEC) is in thermal contact with the plate. A heat transfer tile is in thermal contact with a user side of the TEC. The module is configured to be operatively positionable with the tile in heat transfer relation with skin of a patient.

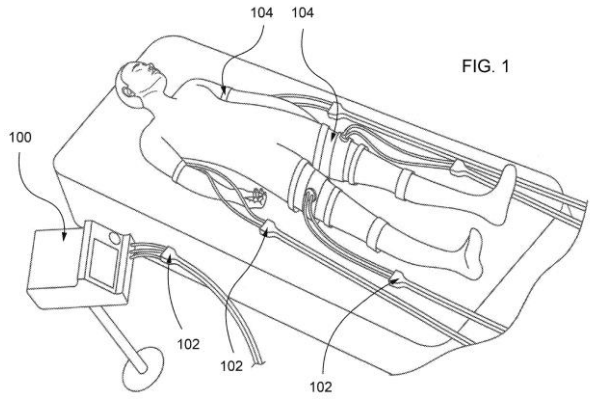

FIG. 1

21: 2019/01912. 22: 2019/03/27. 43: 2023/08/01
51: A61K; C07K
71: AMRYT ENDO, INC.
72: PATOU, GARY
33: US 31: 62/410,971 32: 2016-10-21
33: US 31: 62/472,291 32: 2017-03-16
54: TERLIPRESSIN COMPOSITIONS AND THEIR METHODS OF USE
00: -
Methods are disclosed of treating or preventing hypotension (e.g., neurogenic orthostatic hypotension or postprandial hypotension) or portal hypertension (e.g., bleeding esophageal varices associated with portal hypertension) or ascites (e.g., ascites associated with liver cirrhosis), by oral administration to affected subjects of compositions comprising a therapeutically effective amount of terlipressin or a pharmaceutically acceptable salt thereof.

21: 2019/02056. 22: 2019/04/02. 43: 2023/08/07
51: A23K
71: Hill's Pet Nutrition, Inc., DSM IP Assets B.V.
72: PANICKAR, Kiran, JEWELL, Dennis, GORALCZYK, Regina, PIUSSI, Jenny, MOHAJERI, Hasan
33: US 31: 62/421,006 32: 2016-11-11
54: COMPOSITIONS AND METHODS OF PET FOOD
00: -
Disclosed herein are pet food compositions comprising steviol. Methods of making and using the compositions are also provided.

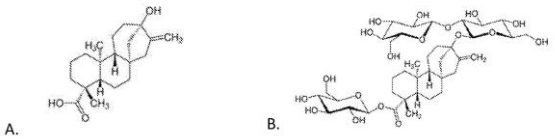

Figure 1.

21: 2019/02531. 22: 2019/04/23. 43: 2023/08/03
51: A01F A01D B02C
71: SEED TERMINATOR HOLDINGS PTY LTD
72: BERRY, Nicholas, Kane
33: AU 31: 2016903873 32: 2016-09-23
54: A MULTISTAGE HAMMER MILL AND A RESIDUE PROCESSING SYSTEM INCORPORATING SAME
00: -
A multistage hammer mill (10) has a plurality of milling stages arranged concentrically about each other. The plurality of milling stages arranged so that substantially all material in a first inner most of the

milling stages passes through all subsequent adjacent milling stages. The milling stages include a first milling stage and a second milling stage. A central feed opening (12) enables material flow into a primary impact zone (14) of the first milling stage. The first milling stage has an impact mechanism (16) and a first screen arrangement (20a). The impact mechanism (16) rotates about a rotation axis (18). The first screen arrangement (20a) is disposed circumferentially about and radially spaced from the impact mechanism (16) and is provided with a plurality of apertures (22) through which impacted material of a first size range can pass. The second milling stage has a second arrangement (20b) disposed circumferentially about and radially spaced from the first screen arrangement (20a) and a circular array of impact elements (50a) disposed between the first screen arrangement (20a) and the second screen arrangement (20b).

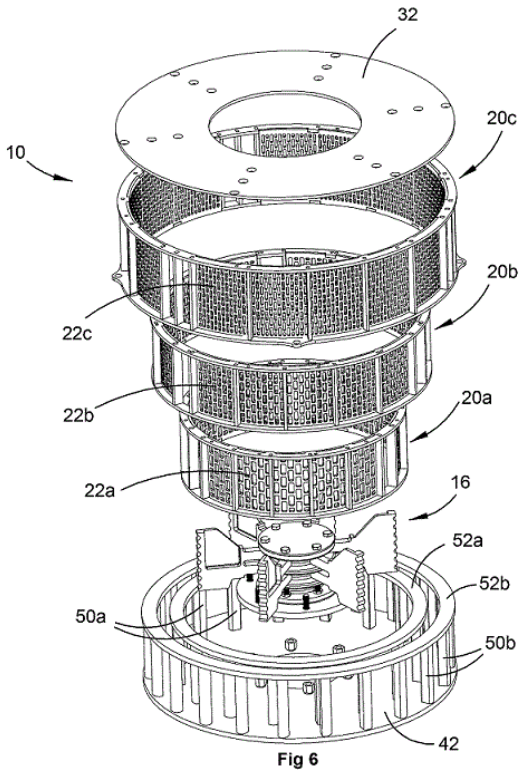

Fig 6

21: 2019/02932. 22: 2019/05/10. 43: 2023/09/07
51: C10J; F01K; F02C
71: 8 RIVERS CAPITAL, LLC
72: ALLAM, Rodney John, RAFATI, Navid
33: US 31: 62/419,552 32: 2016-11-09

54: SYSTEMS AND METHODS FOR POWER PRODUCTION WITH INTEGRATED PRODUCTION OF HYDROGEN

00: -

The present disclosure relates to systems and methods useful for power production. In particular, a power production cycle, comprising a first combustor (102) and a turbine (103), utilizing CO_2 as a working fluid may be configured for simultaneous hydrogen production in an additional hydrogen production unit. Beneficially, substantially all carbon arising from combustion in power production and hydrogen production is captured in the form of carbon dioxide. Further, produced hydrogen (optionally mixed with nitrogen (160) received from an air separation unit) can be input as fuel in a gas turbine combined cycle unit for additional power production therein without any atmospheric CO_2 discharge.

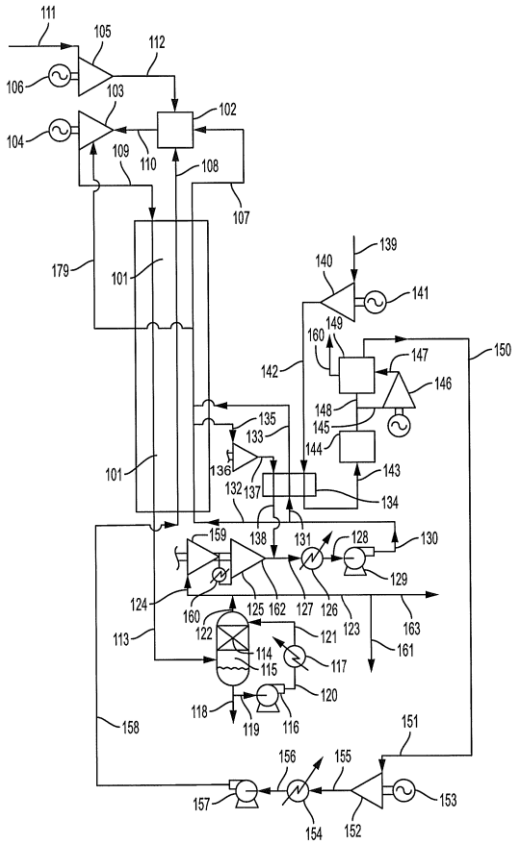

21: 2019/03096. 22: 2019/05/17. 43: 2023/08/04
51: B01J
71: BASF SE
72: PARVULESCU, Andrei-Nicolae, MÜLLER, Ulrich, LÜTZEL, Hans-Jürgen, UHL, Georg, TELES, Joaquim, Henrique, RIEDEL, Dominic, URBANCZYK, Daniel, WEGERLE, Ulrike, WEBER, Markus, WOERZ, Nicolai, Tonio, MUELLER, Christian

33: EP 31: 16205265.8 32: 2016-12-20
54: A PROCESS FOR PREPARING AN EXTRUDABLE COMPOSITION COMPRISING A TITANIUM-CONTAINING ZEOLITIC MATERIAL HAVING FRAMEWORK TYPE MWW
00: -
A process for preparing an extrudable composition comprising a titanium-containing zeo- litic material having framework type MWW, the process comprising providing a titanium- containing zeolitic material having framework type MWW, having a water absorption ca- pacity of at least 11 weight-%, subjecting the titanium-containing zeolitic material having framework type MWW an acid treatment, optionally incorporating zinc in the acid-treated titanium-containing zeolitic material having framework type MWW; preparing a composi- tion comprising the titanium-containing zeolitic material having framework type MWW obtained from (ii) or (iii), a precursor of a silica binder, water, and a kneading agent, wherein the composition does not comprise a polyethylene oxide.

21: 2019/03291. 22: 2019/05/24. 43: 2023/08/01
51: A61K; A61P; C07D
71: Rapport Therapeutics, Inc.
72: AMERIKS, Michael K., GYURIS, Mário, LAFORTEZA, Brian Ngo, LEBOLD, Terry Patrick, MEYER, Stephen Todd, RAVULA, Suchitra, SAVALL, Brad M., SHIREMAN, Brock T., WADE, Warren Stanfield, GERENCSÉR, János
33: US 31: 62/412,868 32: 2016-10-26
54: FUSED BICYLIC PYRIDINE COMPOUNDS AND THEIR USE AS AMPA RECEPTOR MODULATORS
00: -
Provided herein are compounds of Formula (I), and pharmaceutically acceptable salts, N-oxides, or solvates thereof, (I) Also provided herein are pharmaceutical compositions comprising compounds of Formula (I) and methods of using compounds of Formula (I).

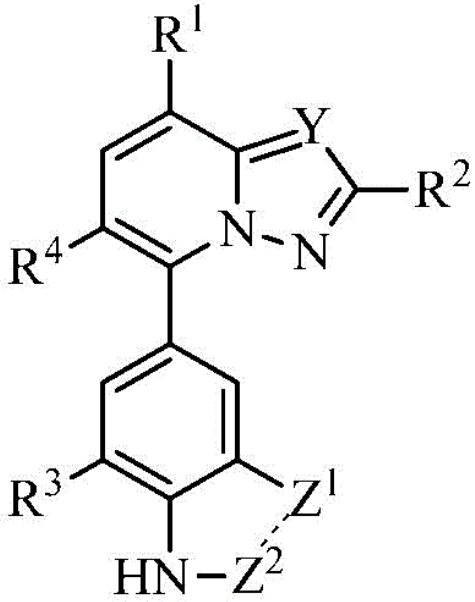

(I)

21: 2019/04279. 22: 2019/06/28. 43: 2023/08/28
51: E04B
71: Gripple Limited
72: FISHER, Thomas Edward Francis
33: GB 31: 1701736.9 32: 2017-02-02
54: SECURING ASSEMBLY
00: -
A securing assembly (10) for use in suspending an article, the securing assembly comprising an insertion arrangement (14) for insertion into the article, and an attaching arrangement (12) for attaching the insertion arrangement to a connector (104). The connector is configured to connect the securing assembly (10) to an elongate suspending member (100). Each of the insertion arrangement (14) and the attaching arrangement (12) define a respective through passage (46, 48) to allow the suspending member (100) to be inserted through the securing assembly (10).

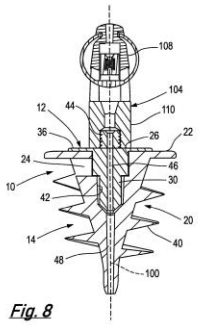

Fig. 8

21: 2019/04647. 22: 2019/07/16. 43: 2023/08/22
51: C07C
71: BASF SE
72: LANG, Ortmund, METZEN, Bernd, HECHLER, Claus
33: EP 31: 16205953.9 32: 2016-12-21
54: METHOD FOR OBTAINING PURE BUTYL ACRYLATE FROM RAW BUTYL ACRYLATE BY DISTILLATION, WHEREIN BUTYL STANDS FOR N-BUTYL OR ISOBUTYL
00: -
The invention relates to a method for obtaining pure butyl acrylate from raw butyl acrylate by distillation, wherein butyl stands for n-butyl or isobutyl, characterized in that the method is carried out in a dividing wall column (1) having dividing built-in components and an evaporator (7), in which dividing wall column a dividing wall (8) is arranged in the column longitudinal direction in such a way that an upper common column region (9), a lower common column region (14), a feed part (10, 12) having a side feed point (2) and a removal part (11, 13) having a side removal point (3) are formed, the column has a number of theoretical separating stages in the range of 20 to 80, wherein the number of theoretical separating stages of the dividing wall column (1) refers to the sum of the theoretical separating stages in the common upper column region (9), the common lower column region (14) and the feed part (10, 12), the side feed point (2) for the raw butyl acrylate is arranged at a theoretical separating stage in the region beginning at least two theoretical separating stages above the bottommost theoretical separating stage and ending at least two theoretical separating stages below the topmost theoretical separating stage, the side removal point (3) for the pure butyl acrylate is arranged at a theoretical separating stage in the region beginning at least two theoretical separating stages above the bottommost theoretical separating stage and ending at least two theoretical separating stages below the topmost theoretical separating stage, and the dividing wall (8) is arranged in the column in the region beginning at least one theoretical separating stage above the bottommost theoretical separating stage and ending at least one theoretical separating stage below the topmost theoretical separating stage, wherein the liquid amount ratio at the upper end of the dividing wall (8) to the enriching section (10) and to the stripping section (11) of the column is set in a range of 1:0.2 to 1:5.

21: 2019/05265. 22: 2019/08/08. 43: 2023/08/24
51: H01H
71: LUCY ELECTRIC (EMS) LIMITED
72: SONAR, Rahul, S., Ramesh, NOVAK, Balazs
33: GB 31: 1702172.6 32: 2017-02-09
54: ARC SPLITTER PLATE
00: -
An arc splitter plate, for a switch having a fixed contact and dual movable contacts, comprises a body having a length being a distance between a first set of two parallel planes defined at a proximal end and a distal end respectively with reference to the dual movable contacts, and a width being a distance between a second set of two parallel planes defined at sides of the body, each plane of the second set being perpendicular to the planes of the first set, the body defining a substantially U-shaped recess in the proximal end of the body with reference to the dual movable contacts, the recess having side walls, a projection at the vertex of the recess extending into the recess and a notch either side of the projection.

Figure 4

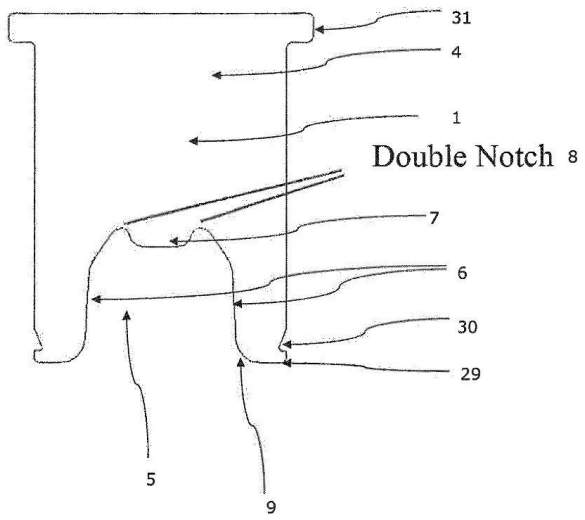

21: 2019/05866. 22: 2019/09/05. 43: 2023/08/28
51: A61K; C07K; C12N
71: The Trustees of the University of Pennsylvania
72: SONG, Wenchao, SATO, Sayaka, MIWA, Takashi, GUILLIPALLI, Damodar
33: US 31: 62/467,498 32: 2017-03-06
54: ANTI-C5 ANTIBODIES AND USES THEREOF
00: -
This invention relates to inhibition of the complement signaling using an C5 antibody. Specifically, the invention relates to methods of treating a complement- mediated disease or complement-mediated disorder in an individual by contacting the individual with an anti-C5 antibody.

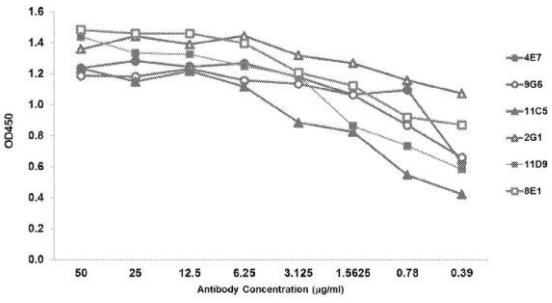

21: 2019/06082. 22: 2019/09/13. 43: 2023/08/22
51: A01N; A01P; C07D
71: Syngenta Participations AG
72: HOFFMAN, Thomas James, STIERLI, Daniel, BEAUDEGNIES, Renaud, POULIOT, Martin, HAAS, Ulrich Johannes
33: EP(CH) 31: 17164335.6 32: 2017-03-31
54: FUNGICIDAL COMPOSITIONS
00: -
A fungicidal composition comprising a mixture of components (A) and (B), wherein components (A) and (B) are as defined in claim 1, and use of the compositions in agriculture or horticulture for controlling or preventing infestation of plants by phytopathogenic microorganisms, preferably fungi.

21: 2019/06085. 22: 2019/09/13. 43: 2023/08/22
51: A01K; A23N
71: CTB, Inc.
72: MARK, Wayne R.
33: US 31: 62/471,357 32: 2017-03-14
54: BROILER PAN FEEDER
00: -
An adjustable feeder pan system for feeding poultry and a related method is provided. The feeder pan system includes a cone portion, an excluder portion that includes a number of anti- rake and radially disposed fins, a skirt, a feed pan, a cap, and optionally a feed shut-off component. The cone includes a pair of stops that may selectively engage with one of a number of pairs of corresponding slots of varying depths on the excluder portion so as to provide multiple feed levels as desired and depending upon the size and age of the poultry being fed.

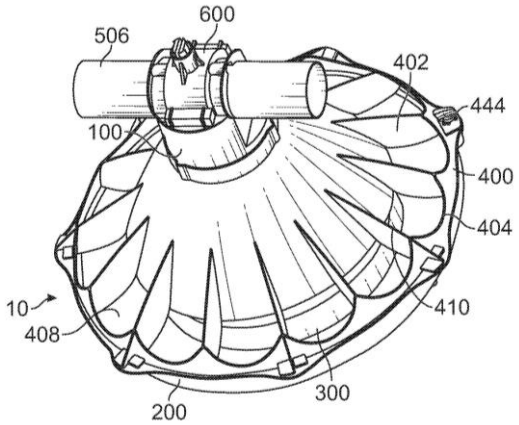

21: 2019/06787. 22: 2019/10/15. 43: 2023/08/22
51: E05B; G07C
71: Abloy Oy
72: KURKI, Antti, HAVUKAINEN, Pauli, DAUBITZ, Matthias, WAHL, Markus
54: CYLINDER LOCK
00: -
The cylinder lock (100) according to the invention comprises a body (1) and, inside it, an inner cylinder

unit (2) provided with an inner cylinder (3). The cylinder lock also comprises a generator (7) for generating electricity from the movement of a key inserted in the cylinder lock. The electricity generated is used to identify the key, and the electricity generated is also used in the electric means if opening the cylinder lock (100) is allowed on the basis of the identification of the key. In connection with the generator (7) are also generator shaft system (10), a channel axis (11) and transmission parts (12) from the channel axis to the generator.

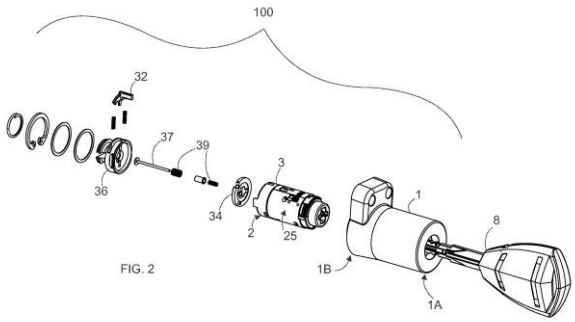

FIG. 2

21: 2019/06854. 22: 2019/10/17. 43: 2023/08/22
51: C21B; F27B
71: Systems Spray-Cooled, Inc.
72: FERGUSON, Scott A., TEMKINA, Marina K., WARD, Troy D.
33: US 31: 15/490,472 32: 2017-04-18
54: COOLING SYSTEM FOR A SURFACE OF A METALLURGICAL FURNACE
00: -
A cooling system to cool a surface of a tilting metallurgical furnace including an inner plate of the surface, a plurality of nozzles, and a drain manifold is disclosed. The inner plate has an external surface and an internal surface. The plurality of nozzles is configured to be fluidly connected to a coolant supply pipe. At least a first nozzle of the plurality of spray conduits is configured to spray coolant against the external surface of the inner plate. The drain manifold positioned to receive coolant from the external surface of the inner plate. At least a second nozzle of the plurality of nozzles is configured to spray coolant directly into the drain manifold.

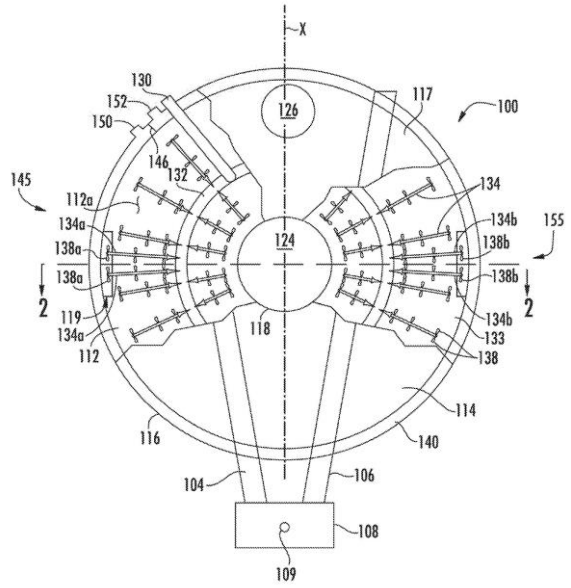

21: 2019/06881. 22: 2019/10/18. 43: 2023/08/22
51: A61M
71: Terumo BCT, Inc.
72: FELT, Thomas J., HLAVINKA, Dennis J., HOLMES, Brian M., O'BRIEN, Peter, POLODNA, Taylor
33: US 31: 62/488,404 32: 2017-04-21
54: METHODS AND SYSTEMS FOR HIGH-THROUGHPUT BLOOD COMPONENT COLLECTION
00: -
Described are embodiments that include devices for separating components from blood. Embodiments may involve the separation of plasma from whole blood. Also described are embodiments that include methods and devices for positioning portions, e.g., loops, of disposables in medical devices. Embodiments may involve use of surfaces for automatically guiding loops to position them into a predetermined position.

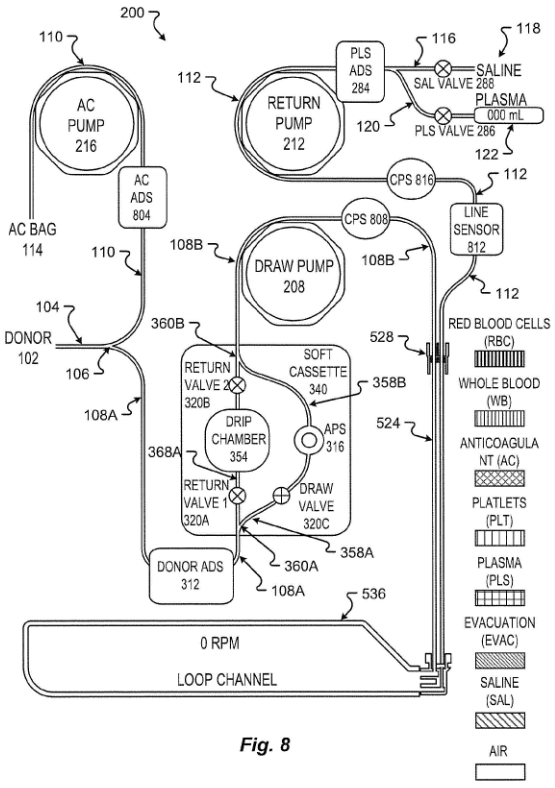

Fig. 8

21: 2019/06992. 22: 2019/10/23. 43: 2023/08/22
51: H04L
71: Huawei Technologies Co., Ltd.
72: CHEN, Ying, ZHANG, Gongzheng, HUANG, Lingchen, LI, Rong, ZHANG, Huazi, LUO, Hejia
33: CN 31: 201710184322.X 32: 2017-03-24
54: A COMMUNICATION METHOD AND APPARATUS
00: -
Provided are an encoding method, a decoding method, an apparatus and a device. The method comprises: a sending device acquiring a target structure sequence, the target structure sequence comprising a ranking sequence and/or a quantisation sequence, the ranking sequence being a sequence acquired after ranking a sequence number of a channel according to channel reliability, and the quantisation sequence being a sequence acquired after performing normalisation processing on the channel reliability and then ranking the result of normalisation; the sending device determining, according to the target structure sequence, a position set, the position set being used for indicating the position, in the channel, of an information bit sequence; the sending device encoding, according to the position set, an information bit sequence to be encoded to obtain an encoded bit sequence; and the sending device sending the encoded bit sequence to a receiving device. The present application can improve the flexibility of acquiring an information bit position set.

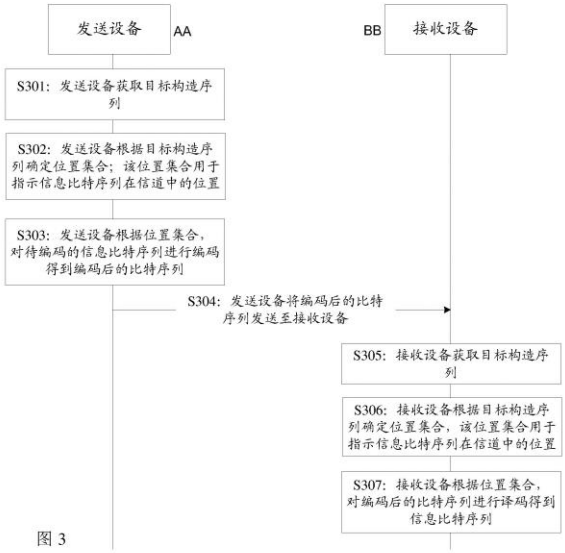

图 3

S301 A sending device acquires a target structure sequence
S302 The sending device determines, according to the target structure sequence, a position set, the position set being used for indicating the position, in a channel, of an information bit sequence
S303 The sending device encodes, according to the position set, an information bit sequence to be encoded to obtain an encoded bit sequence
S304 The sending device sends the encoded bit sequence to a receiving device
S305 The receiving device receives the target structure sequence
S306 The receiving device determines, according to the target structure sequence, a position set, the position set being used for indicating the position, in the channel, of an information bit sequence
S307 The receiving device decodes, according to the position set, the encoded bit sequence to obtain the information bit sequence
AA Sending device
BB Receiving device

21: 2019/07028. 22: 2019/10/24. 43: 2023/08/22
51: C11D
71: Colgate-Palmolive Company
72: BAUTISTA CID, Oscar, CARDENAS ALPIZAR, Erick, MALDONADO, Raul Arellano, BUCIO, Jose, URAY, Alp, TOVAR PESCADOR, Jose Javier, SANCHEZ, Sandra Paola
33: US 31: 62/530,493 32: 2017-07-10
54: FABRIC CARE COMPOSITION
00: -
A fabric care composition, including a fabric softening agent including esterquat and a co-softening agent including polyquaternium-7.

21: 2019/07070. 22: 2019/10/25. 43: 2023/08/22
51: C21C; C21D; F23C
71: Linde Aktiengesellschaft
72: ADENDORFF, Martin, VON SCHEELE, Joachim

54: METHOD AND BURNER FOR HEATING A FURNACE FOR METAL PROCESSING

00: -

A method for heating a furnace (40) used for metal processing by combusting a fuel in the furnace (40) by supplying an oxidizing gas through an oxidizing gas supply line (20) into the furnace (40) and by supplying a fuel through a fuel supply line (30) into the furnace (40), wherein the oxidizing gas is supplied in form of a central oxidizing gas flow (24) together with a first shroud gas flow (25), and/or the fuel is supplied in form of a central fuel flow (34) together with a second shroud gas flow (35), and to a corresponding burner (10).

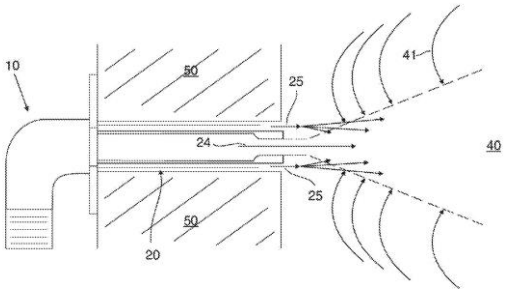

21: 2019/07113. 22: 2019/10/28. 43: 2023/08/23
51: B01J
71: Umicore AG & Co. KG
72: KRAUS, John, MARCUS, Williams
33: US 31: 15/642,614 32: 2017-07-06

54: METHOD OF APPLYING A MULTILAYER WET-ON-WET COATING TO A SUBSTRATE

00: -

A method of coating a substrate includes distributing a first catalyst slurry having a first catalytic composition and a first initial viscosity within the substrate to form a first catalyst layer within the substrate; adjusting the viscosity of the first catalyst layer such that the first catalyst layer is made to have a first adjusted viscosity that is greater than the first initial viscosity of the first catalyst slurry; distributing a second catalyst slurry having a second catalytic composition and a second initial viscosity within the substrate to form a second catalyst layer within the substrate, the second initial viscosity being made to be less than the first adjusted viscosity; the second catalyst slurry being distributed within the substrate while the first catalyst layer is in a wet state such that the second catalyst layer is formed as a wet-on-wet coating that at least partially overlaps the first catalyst layer.

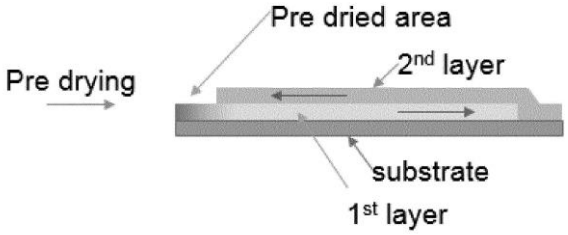

21: 2019/07144. 22: 2019/10/29. 43: 2023/08/22
51: A61P; C07D
71: Merck Patent GmbH
72: LANGE, Michael, KUEHN, Clemens, FUCHSS, Thomas, MAILLARD, David, BREUNING, Marcel, POMA, Marco, BURINI, Edoardo
33: EP(DE) 31: 17163826.5 32: 2017-03-30

54: SOLID FORM OF (S)-[2-CHLORO-4-FLUORO-5-(7-MORPHOLIN-4-YLQUINAZOLIN-4-YL)PHENYL]-(6-METHOXY-PYRIDAZIN-3-YL)METHANOL

00: -

The present invention relates to anhydrous disordered crystalline (S)-[2-chloro-4-fluoro-5-(7-morpholin-4-ylquinazolin-4-yl)phenyl]-(6-methoxy-pyridazin-3-yl)methanol, as well as a method of making same, and pharmaceutical compositions and medical uses thereof.

21: 2019/07520. 22: 2019/11/13. 43: 2023/08/28
51: A01N; A01P
71: UPL LTD
72: VAN DER LAAN, Alexander Cornelis, SHIRSAT, Rajan, SHROFF, Jaidev Rajnikant, SHROFF, Vikram Rajnikant
33: IN 31: 201731017542 32: 2017-05-18

54: STABLE LIQUID FORMULATIONS OF PROTHIOCONAZOLE

00: -

A formulation comprising prothioconazole and a stabilizing amount of a transition metal salt, optionally a co-pesticide, optionally two co-pesticides, a process for the preparation thereof, a method of use thereof and kit comprising the components thereof is disclosed.

21: 2019/07746. 22: 2019/11/22. 43: 2023/09/27
51: C07D
71: CHEMOCENTRYX, INC.

72: FAN, Pingchen, LANGE, Christopher W., LUI, Rebecca M., MALATHONG, Viengkham, MALI, Venkat Reddy, PUNNA, Sreenivas, SINGH, Rajinder, TANAKA, Hiroko, ZENG, Yibin, ZHANG, Penglie
33: US 31: 62/513,010 32: 2017-05-31

54: 6-5 FUSED RINGS AS C5A INHIBITORS

00: -

The present disclosure provides, inter alia, Compounds of Formula (I) (I) or pharmaceutically acceptable salts thereof that are modulators of the C5a receptor. Also provided are pharmaceutical compositions and methods of use including the treatment of diseases or disorders involving pathologic activation from C5a and non-pharmaceutical applications.

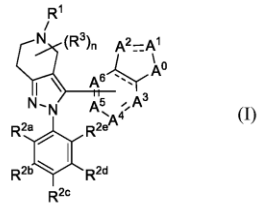

(I)

21: 2019/07789. 22: 2019/11/25. 43: 2023/08/18
51: A61K
71: Novo Nordisk A/S
72: VEGGE, Andreas, SCHÉELE, Susanne, BJERREGAARD, Simon
33: EP(DK) 31: 17175131.6 32: 2017-06-09

54: SOLID COMPOSITIONS FOR ORAL ADMINISTRATION

00: -

The present invention relates to solid compositions for oral administration comprising (i) a GLP-1 derivative and the SGLT2 inhibitor dapagliflozin or (ii) a GLP-1 derivative and a salt of NAC in combination with an SGLT2 inhibitor.

21: 2019/07838. 22: 2019/11/26. 43: 2023/08/23
51: G06Q
71: nChain Holdings Limited
72: BARTOLUCCI, Silvia, JOSEPH, Daniel
33: GB 31: 1709871.6 32: 2017-06-20
33: GB 31: 1709868.2 32: 2017-06-20

54: SYSTEM AND METHOD OF MULTI-ROUND TOKEN DISTRIBUTION USING A BLOCKCHAIN NETWORK

00: -

A computer-implemented method to initiate a token transfer process for transferring respective first quantities of tokens between a plurality of pairs of sender nodes and respective recipient nodes using a blockchain.The method includes: determining a number of transaction rounds in the token transfer process; generating a set (TT) of indirect token transactions based on the respective first quantities of tokens and the number of transaction rounds, wherein execution of all of the indirect token transactions in the set results in net transfer of the respective quantities of tokens from the sender nodes to their respective recipient nodes and wherein the set of indirect token transactions includes randomized pairings of the sender nodes and recipient nodes in which each may be an input node or an output node for a particular indirect token transaction; and for each of the sender and recipient nodes, transmitting a subset of the set of indirect token transactions to that node, the subset including those transactions for which that node is either the input node or the output node.

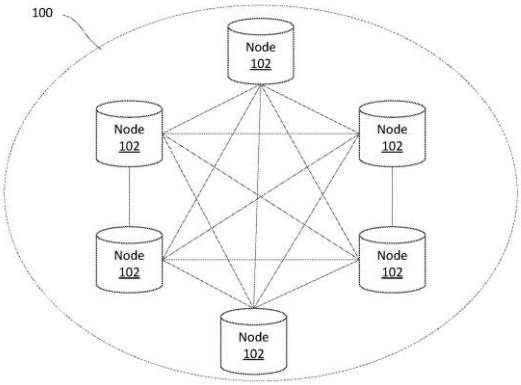

21: 2019/08218. 22: 2019/12/10. 43: 2023/08/02
51: B02C
71: FLSmidth A/S
72: SCHROERS, Frank
33: DE 31: 10 2017 208 014.0 32: 2017-05-11

54: ROLLER MILL AND METHOD FOR OPERATING A ROLLER MILL

00: -

The invention relates to a roller mill (10) for comminuting a granular material, having a first mill roller (12) and a second mill roller (14) which are arranged opposite each other and can be driven in opposite directions. A mill gap (16) is formed between the mill rollers (12, 14), and at least one of the mill rollers (12, 14) has an edge element (18, 20)

at an end region (22, 24, 26, 28) of the mill roller (12, 14), said edge element being designed such that the edge element extends over the mill gap (16) and at least partly covers the end face of the opposing mill roller (12, 14). A scraping element (42, 44) for at least partly removing material is arranged on the end region (22, 24, 26, 28) of the mill roller (12, 14) that is provided with an edge element (18, 20). The invention also relates to a method for operating a roller mill (10), said method having at least the step of: at least partly removing material from an end region of a mill roller (12, 14).

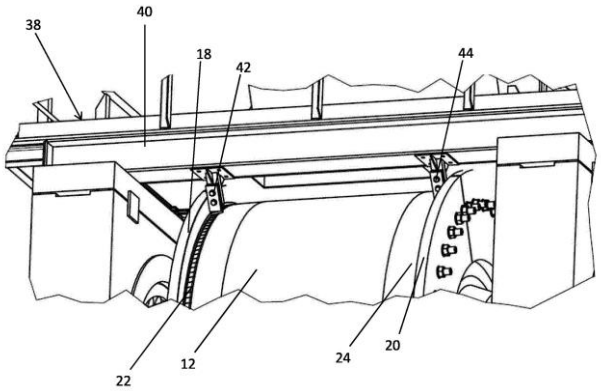

21: 2019/08405. 22: 2019/12/17. 43: 2023/08/08
51: D01H; D02G
71: Südwolle Group GmbH
72: KAMINSZKY, Robert Daniel, MAGALHAES DE SA ALCINO, Miguel, THOUVAY, Stéphane
33: DE 31: 10 2017 124 659.2 32: 2017-10-23
54: METHOD AND APPARATUS FOR PRODUCING A YARN
00: -
The invention relates to a method for producing a yarn (3) formed by spinning together at least two individual threads (2a-2c), comprising the following steps of: - providing at least two individual threads (2a-2c) to be spun together to form the yarn (3) to be produced, - feeding the at least two provided threads (2a-2c) to a spinning device (6), comprising at least one spindle or bobbin element (10), via a guide device (5) comprising a plurality of, in particular cylinder-like or cylindrical, guide elements (5a-5e), - spinning together the fed threads (2a, 2b) in the spinning device (6), forming the yarn (3) to be produced, wherein the at least two threads (2a, 2b) are fed to the spinning device (6) via at least two separate, in particular cylinder-like or cylindrical, guide elements (5d, 5e) that are arranged in a manner spatially separated from one another in at least one spatial direction.

FIG 1

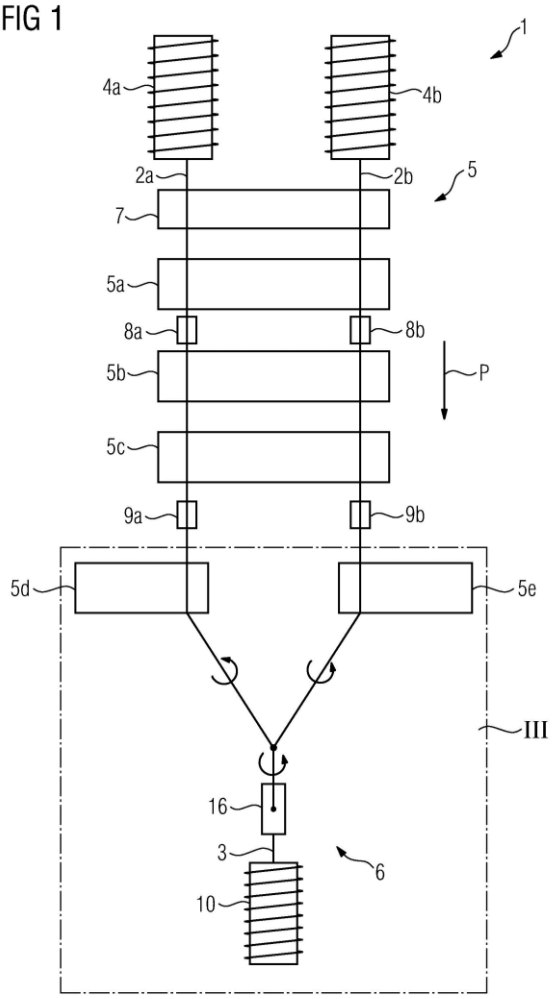

21: 2019/08446. 22: 2019/12/18. 43: 2023/08/01
51: A61K; A61P
71: Les Laboratoires Servier, Novartis AG
72: WEI, Andrew, MOUJALLED, Donia, POMILIO, Giovanna, GENESTE, Olivier, MARAGNO, Ana-Leticia
33: US 31: 62/523,389 32: 2017-06-22
54: COMBINATION OF A MCL-1 INHIBITOR AND A STANDARD OF CARE TREATMENT FOR HEMATOLOGIC CANCERS, USES AND PHARMACEUTICAL COMPOSITIONS THEREOF
00: -
A combination comprising a Mcl-1 inhibitor and a second anticancer agent, wherein the second anticancer agent is selected from anthracyclines, cytarabine and hypomethylating agents, and compositions and uses thereof.

21: 2019/08488. 22: 2019/12/19. 43: 2023/08/07
51: A61K; A61P; C07D
71: Bristol-Myers Squibb Company
72: YADAV, Navnath Dnyanoba, BHIDE, Rajeev S., BORA, Rajesh Onkardas, GUNAGA, Prashantha, PANDA, Manoranjan, PRIESTLEY, Eldon Scott, RICHTER, Jeremy
33: IN 31: 201711019293 32: 2017-06-01
54: SUBSTITUTED NITROGEN CONTAINING COMPOUNDS
00: -
Disclosed are compounds of Formula (I): or a salt thereof, Formula (II) wherein R^1 is: or; each W is independently NR1b or O; Z is a bond or CHR^{1d}; and R^1, R^2, Rd, R^{3a}, R^{3b}, L^1, B, V, Y, and n are defined herein. Also disclosed are methods of using such compounds as inhibitors of ROMK, and pharmaceutical compositions comprising such compounds. These compounds are useful in treating cardiovascular diseases.

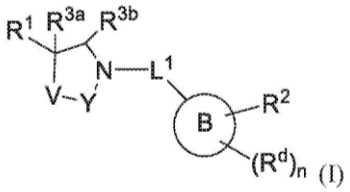

(I)

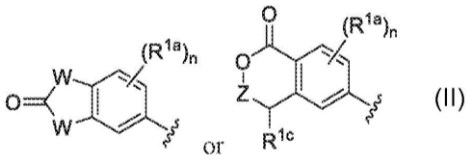

(II)

21: 2019/08551. 22: 2019/12/20. 43: 2023/08/04
51: G06F
71: nChain Holdings Limited
72: GAMAROFF, Lorien Benjamin, BROWN, Angus James Farquharson Campbell
33: ZA 31: 2017/04853 32: 2017-07-18
54: SYSTEMS AND METHODS FOR BLOCKCHAIN-DEPENDENT OPERATION SETS
00: -
Systems and methods for performing a plurality of operations, in which at least one operation comprises a blockchain transaction, are described. A request to perform a plurality of operations is received, where the operations comprise a blockchain transaction and a second transaction of a type other than a block chain transaction. A conversion factor is obtained from a service and a blockchain transaction is recorded based on the conversion factor. The recorded blockchain transaction comprises an amount of a digital asset (e.g., Bitcoin) based on the conversion factor, a generated blockchain address, and an interstitial change address. The second transaction is performed as a result of the blockchain transaction having been validated.

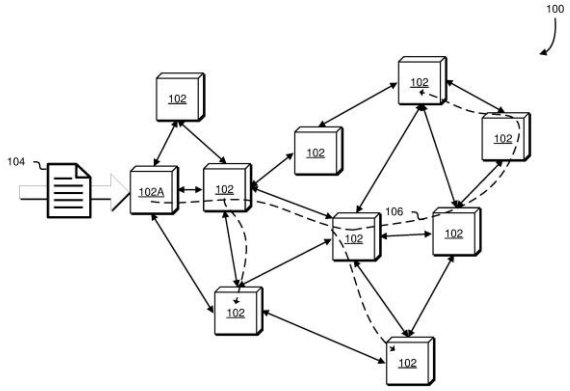

21: 2019/08610. 22: 2019/12/23. 43: 2023/09/27
51: A61K; A61P
71: JIANGSU HENGRUI MEDICINE CO., LTD., SHANGHAI HENGRUI PHARMACEUTICAL CO., LTD.
72: WU, Tingting, LI, Hao, LIU, Xun
33: CN 31: 201710611317.2 32: 2017-07-25
54: IL-15 PROTEIN COMPLEX PHARMACEUTICAL COMPOSITION AND USES THEREOF
00: -
The present disclosure relates to a pharmaceutical composition, which comprises an IL-15 protein complex and a citrate buffer solution. In addition, the pharmaceutical composition may also comprise a sugar and a non-ionic surfactant. The pharmaceutical composition in the present disclosure demonstrates a high degree of stability even after being stored at 2-8 °C for several months.

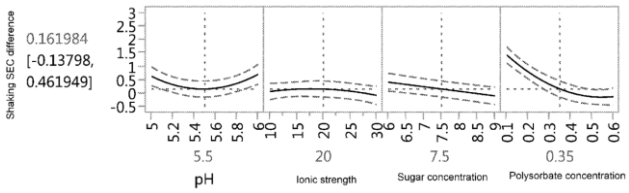

21: 2020/00027. 22: 2020/01/02. 43: 2023/08/23
51: C07K; G01N; A61K; A61P
71: EUREKA THERAPEUTICS, INC.
72: ZHANG, PENGBO, XU, YIYANG, MORALES, JAVIER, NAKANO, YOKO, LIU, HONG, XIANG, JINGYI, ACKER, TIMOTHY
33: US 31: 62/490,586 32: 2017-04-26
54: CONSTRUCTS SPECIFICALLY RECOGNIZING GLYPICAN 3 AND USES THEREOF
00: -
The present application provides constructs comprising an antibody moiety specifically recognizing Glypican 3 (GPC3), such as a cell surface-bound GPC3. Also provided are methods of making and using these constructs.

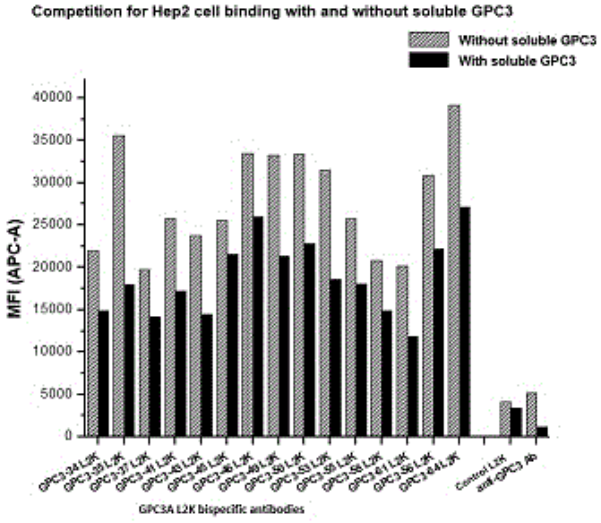

21: 2020/00409. 22: 2020/01/21. 43: 2023/08/23
51: A61K; C07K
71: THE GENERAL HOSPITAL CORPORATION
72: TANZI, RUDOLPH E, QUINTI, LUISA, KIM, DOO YEON
33: US 31: 62/535,589 32: 2017-07-21
33: US 31: 62/530,125 32: 2017-07-08
54: SCREENING PLATFORM TO IDENTIFY THERAPEUTIC DRUGS OR AGENTS FOR TREATMENT OF ALZHEIMER'S DISEASE
00: -
Disclosed are methods and compositions for screening candidate substances for the prevention or treatment of neurodegenerative disorders such as Alzheimer's disease. The disclosure also relates to identifying the mechanisms of action for known or suspected Alzheimer's disease drugs and generally to compositions and methods for modulating the function of cells expressing CD33.

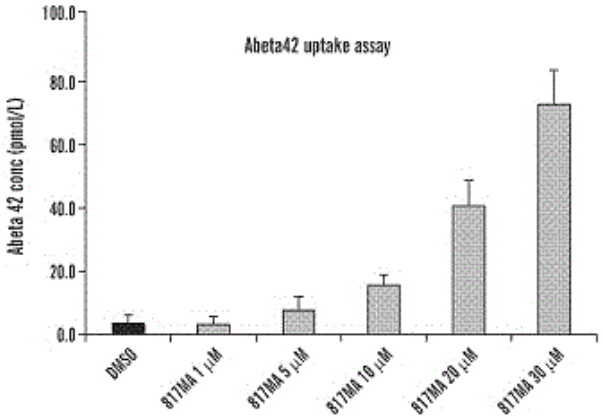

21: 2020/00411. 22: 2020/01/21. 43: 2023/08/23
51: C07D; A01N
71: ADAMA MAKHTESHIM LTD.
72: GRABARNICK, MICHAEL, SUEZ, GAL, NEMET, ZOLTÁN, ALASIBI, SAMAA
33: US 31: 62/533,509 32: 2017-07-17
54: POLYMORPHS OF 5-FLUORO-4-IMINO-3-METHYL-1-TOSYL-3,4-DIHYDROPYRIMIDIN-2-ONE
00: -
The present subject matter provides a crystalline form of the compound having the following structure: Formula (I), wherein the crystalline form is a polymorph, hydrate or solvate.

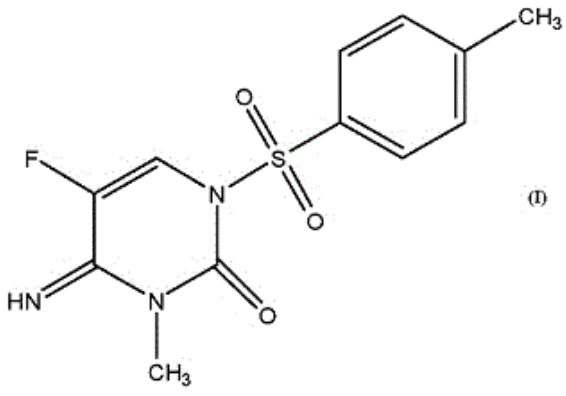

21: 2020/00432. 22: 2020/01/22. 43: 2023/08/23
51: A61B
71: COMMSCOPE TECHNOLOGIES LLC
72: DIEPSTRATEN, PATRICK JACQUES ANN, HERRERA, DANIEL EDUARDO, ATKINSON, DARREN CRAIG, KAMENIK, ROMAN, ALTAMIRANO ESCOBEDO, EMMANUEL ALBERTO
33: US 31: 62/536,823 32: 2017-07-25
54: HARDENED FAN-OUT ARRANGEMENT
00: -
The present disclosure relates to a hardened fiber optic fan-out arrangement including a fan-out housing. A plurality of fiber optic pigtails projects outwardly from the fan-out housing. The fiber optic pigtails have free ends including hardened de-mateable fiber optic connection interfaces. A fiber optic feeder cable also projects outwardly from the fan-out housing. The fiber optic feeder cable is optically coupled to the fiber optic pigtails.

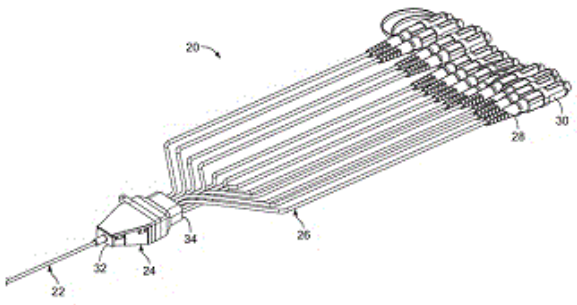

21: 2020/00433. 22: 2020/01/22. 43: 2023/08/23
51: F16H; B65G; F16G
71: LIFTWAVE, INC. DBA RISE ROBOTICS
72: SESSIONS, BLAKE
33: US 31: 62/530,420 32: 2017-07-10
54: NORMALIZING TENSION DISTRIBUTION AND MINIMIZING SIDEWALL ABRASION WITHIN ANGULAR DRIVE BELT SYSTEMS
00: -
This disclosure relates to methods and apparatuses of employing belts for an angular drive. A twisted geometry is applied to a first free span of the belt. A sheave supports the first free span of the belt at a first extremity of the first free span and sheave is at least one of positioning and orienting the rotating sheave or the driven sheave so as to misalign a geometric centerline of the first free span of belt at a given fleet angle with respect to a second extremity of the first free span.

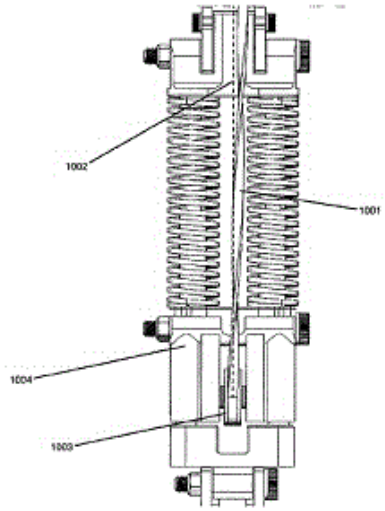

21: 2020/00548. 22: 2020/01/27. 43: 2023/08/23
51: A01N
71: CORTEVA AGRISCIENCE LLC
72: VOGLEWEDE, CHRISTOPHER J, MANN, RICHARD K, OUSE, DAVID G, MCVEIGH-NELSON, ÄNDREA CHRISTINE, GIFFORD, JAMES M, RUEN, DAVE C
33: US 31: 62/543,504 32: 2017-08-10
54: HERBICIDAL COMPOSITIONS COMPRISING 4-AMINO-3-CHLORO-5-FLUORO-6-(4-CHLORO-2-FLUORO-3-METHOXYPHENYL) PYRIDINE-2-CARBOXYLIC ACID OR A DERIVATIVE THEREOF AND TEMBOTRIONE AND/OR TOPRAMEZONE
00: -
Provided herein are herbicidal compositions and methods of controlling undesirable vegetation utilizing (a) a compound of formula (I): or an agriculturally acceptable salt or ester thereof, and (b) tembotrione and/or topramezone. The compositions and methods provided herein provide control of undesirable vegetation, e.g., in corn crops such as field corn, field corn grown for seed, and popcorn, sweet corn, sorghum, and any other crops that are naturally tolerant to or contain herbicide tolerant traits to these active ingredients.

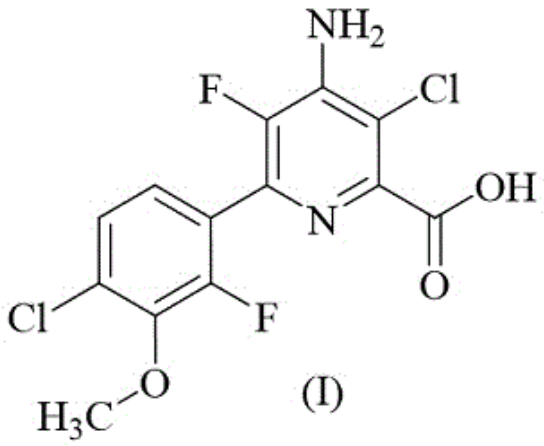

(I)

21: 2020/00674. 22: 2020/01/31. 43: 2023/08/23
51: C12Q
71: Mast Group Limited
72: HOBSON, Jonathan Anthony, COLEBORN, Matilda May, DAVIES, Mya, ANYAKWO, Andrew Chuka
33: GB 31: 1712671.5 32: 2017-08-07
54: DETECTION OF CARBAPENEMASE-PRODUCING ENTEROBACTERIALES, PSEUDOMONAS AND ACINETOBACTER SPECIES USING A CHROMOGEN
00: -

The present application relates to a method for detecting the presence of carbapenemase- producing Enterobacteriales, *Pseudomonas* and *Ancinetobacter* in a sample, comprising; providing a sample suspected of having carbapenemase-producing Enterobacteriales, *Pseudomonas* or *Acinetobacter*; reacting the sample with a solution of (7R)-7-[(z)-2-(2-aminothiazol-4-yl)-(Z)-2(methoxyimino)acetamide]-3-(2,4-dinitrostyryl)-3-cephem-4 carboxylic acid) or a salt thereof, and detecting a color change in the reaction medium when carbapenemase-producing Enterobacteriales, *Pseudomonas* or *Acinetobacter* are present in the test sample.

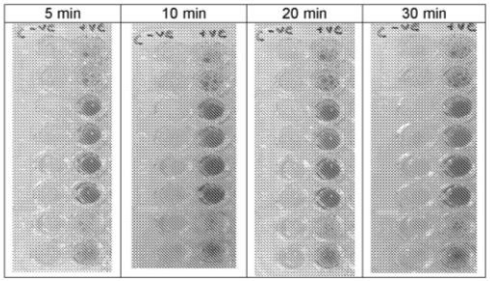

21: 2020/00704. 22: 2020/02/03. 43: 2023/08/23
51: E21B
71: EPIROC ROCK DRILLS AKTIEBOLAG
72: SJÖHOLM, OSKAR, ANDERSSON, FREDRIK A, KUMLIN, PER-ANDERS, ALMQVIST, MARCUS
33: SE 31: 1751089-2 32: 2017-09-08
54: MINING OR CONSTRUCTION VEHICLE
00: -

A mining or construction vehicle (10) comprising a boom (12) extending in a first direction (D1), which boom (12), via a first and a second rotation device (15,16), is connected to a hydraulic device arranged on a mounting device (11) arranged at a free end of said boom (12), the first rotation device (15) being arranged to provide a rotation around a first axis (A1) that is substantially parallel to the first direction (D1), and a second rotation device (16) being arranged to provide a rotation around a second axis (A2) that is arranged at an angle with respect to the first axis (A1). Hydraulic conduits (17) for supply of hydraulic fluid to said hydraulic device on said mounting device (11) are arranged through at least one of the first and second rotation devices (15, 16).

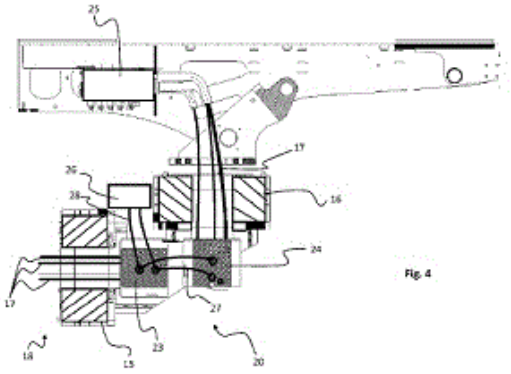

Fig. 4

21: 2020/00852. 22: 2020/02/10. 43: 2023/08/23
51: C12N; A61K; C07K
71: NATIONAL UNIVERSITY OF SINGAPORE
72: KAMIYA, TAKAHIRO, CAMPANA, DARIO
33: US 31: 62/543,735 32: 2017-08-10
54: T CELL RECEPTOR-DEFICIENT CHIMERIC ANTIGEN RECEPTOR T-CELLS AND METHODS OF USE THEREOF
00: -

The present invention provides compositions comprising a protein expression blocker or PEBL comprising a target-binding molecule and localizing domain, and methods of using such compositions in cancer therapy. PEBLs are useful as a blockade of expression of target surface receptors (peptides or antigens) in immune cells. Also provided herein are CD3/TCRαβ- deficient T cells and CD3/TCRαβ-deficient chimeric antigen receptor T cells that express such PEBLs.

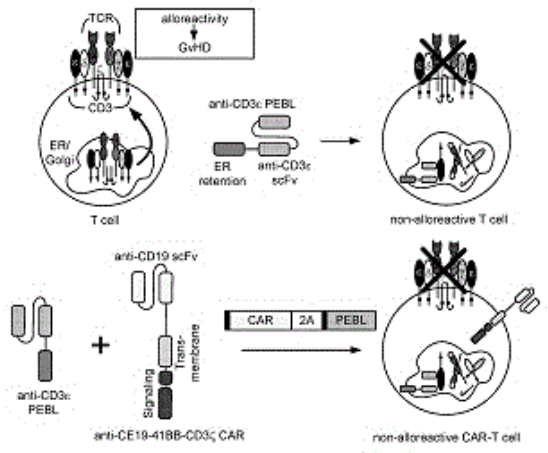

21: 2020/00857. 22: 2020/02/10. 43: 2023/08/23
51: F23D; C23C
71: HALDOR TOPSØE A/S, NATIONAL INSTITUTE FOR AEROSPACE TECHNOLOGY (INTA)
72: ØSTERGÅRD, MARIA JOSÉ LANDEIRA, AGÜERO BRUNA, ALINA, GUTIÉRREZ DEL OLMO, MARCOS, GYDE THOMSEN, SØREN
33: ES 31: P 201731139 32: 2017-09-22
54: BURNER WITH A SLURRY COATING, WITH HIGH RESISTANCE TO METAL DUSTING
00: -
At least a part of a burner for a catalytic reactor is coated with a silicate based nickel aluminide slurry diffusion coating.

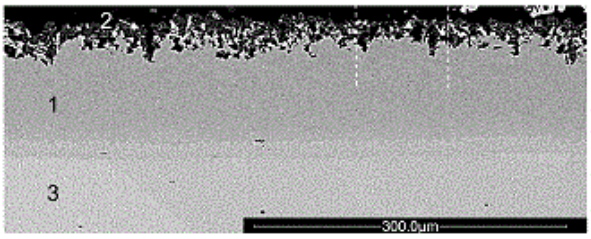

21: 2020/00931. 22: 2020/02/13. 43: 2023/08/23
51: H04L H04B
71: KRATOS INTEGRAL HOLDINGS, LLC
72: PEARCE, Stephen, POTTER, Robert
33: US 31: 15/670,996 32: 2017-08-07
54: SYSTEM AND METHOD FOR INTERFERENCE REDUCTION IN RADIO COMMUNICATIONS
00: -
This disclosure provides a system and method for separating a first signal from a second signal of a plurality of constituent signals within a composite signal. The method can include receiving a first portion of the composite signal at a first clock rate and exponentiating it to detect the first signal and the second signal within the composite signal and determine modulation estimates of the first and second signals and at least one symbol rate. The method can include resampling the first portion based on the modulation estimates at x-times the symbol rate to determine symbol trajectory, modulation type, and offset information between the first and second signals. The method can include determining a synthesized first signal and a synthesized second signal representing the first signal and the second signal within the first period of time at a second clock rate that is a multiple of the first clock rate.

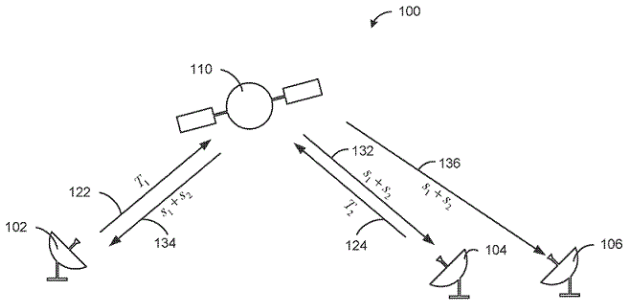

21: 2020/01000. 22: 2020/02/17. 43: 2023/08/08
51: G06F
71: SONTIQ, INC.
72: VAN DYKE, JAMES
33: US 31: 62/548,656 32: 2017-08-22
54: DATA BREACH SCORE AND METHOD
00: -
Assessing a consumer's risk of harms related to a data breach includes determining, for the particular data breach, a data breach score, referred to as a Breach Clarity™ (BC) score, indicative of the risk of harm related to the particular breach. A data structure pairs a breached information element with at least one potential harm. Algorithms assign a harm risk score to the harm, determine an element risk score for the information element-harm pair, and determine a BC score using the harm risk and element risk scores, and an exposure rating. The BC score can be modified by a scaling algorithm to generate a relative BC score. The system identifies and rank orders mitigation actions for the breach and outputs these with the BC score to the consumer. A consumer's demographic and/or behavioral characteristics can be factored into the exposure rating and ranking of the mitigation actions.

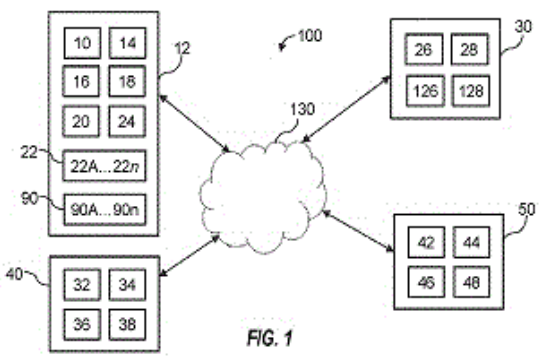

FIG. 1

21: 2020/01027. 22: 2020/02/18. 43: 2023/08/11
51: A61K; A61P; C07D
71: BlackThorn Therapeutics, Inc.
72: CHAMBERS, Mark, HARDICK, David, TIERNEY, Jason, KNIGHT, Chris, LOCK, Chris, BRANDT, Gary, JONES, Robert M., URBANO, Mariangela
33: US 31: 62/554,452 32: 2017-09-05
54: VASOPRESSIN RECEPTOR ANTAGONISTS AND PRODUCTS AND METHODS RELATED THERETO
00: -
Compounds are provided that antagonize vasopressin receptors, particularly the V1a receptor products containing such compounds, as well as to methods of their use and synthesis. Such compounds have the structure of Formula (I), or a pharmaceutically acceptable isomer, racemate, hydrate, solvate, isotope, or salt thereof: (I) wherein Q^1, Q^2, Q^3, R^{2a}, R^{2b}, R^3 and X are as defined herein

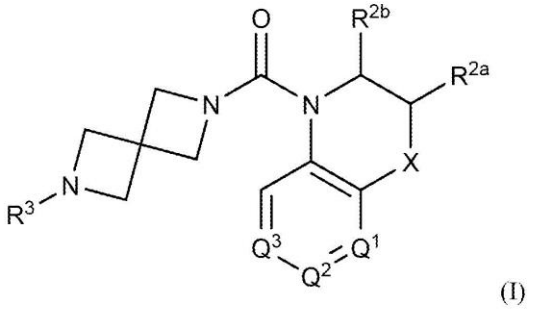
(I)

21: 2020/01057. 22: 2020/02/19. 43: 2023/08/11
51: C07D
71: FORMA Therapeutics, Inc.
72: CARAVELLA, Justin, HAN, Bingsong, LIU, Cuixian, IOANNIDIS, Stephanos, BUCKMELTER, Alexandre Joseph, RICHARD, David James, MARTIN, Matthew W., MISCHKE, Steven, MENTE, Scot
33: US 31: 62/569,177 32: 2017-10-06
54: INHIBITING UBIQUITIN SPECIFIC PEPTIDASE 30
00: -
The present disclosure relates to chemical entities useful as inhibitors of Ubiquitin Specific Peptidase 30 (USP30), pharmaceutical compositions comprising the chemical entities, and methods of using the chemical entities. The chemical entities as disclosed herein can be useful in the treatment of a disease, disorder, or condition involving mitochondrial dysfunction, including neurodegenerative diseases, motor neuron diseases, metabolic disorders, and cancers, among other ailments.

21: 2020/01074. 22: 2020/02/20. 43: 2023/08/23
51: C07D; A61K
71: TES PHARMA S.R.L.
72: PELLICCIARI, ROBERTO, AUWERX, JOHAN, RAFFAELLI, NADIA
33: US 31: 62/043,853 32: 2014-08-29
54: INHIBITORS OF A-AMINO-B-CARBOXYMUCONIC ACID SEMIALDEHYDE DECARBOXYLASE
00: -
The present disclosure discloses compounds capable of modulating the activity of α-amino-β-carboxymuconic acid semialdehyde decarboxylase (ACMSD), which are useful for the prevention and/or the treatment of diseases and disorders associated with defects in NAD^+biosynthesis,*e.g.*, metabolic disorders, neurodegenerative diseases, chronic inflammatory diseases, kidney diseases, and diseases associated with ageing. The present application also discloses pharmaceutical compositions comprising said compounds and the use of such compounds as a medicament.

21: 2020/01086. 22: 2020/02/20. 43: 2023/08/23
51: H05H; G21G; A61K
71: ZEISLER, STEFAN, KUMLIN, JOEL OSCAR OLSSON
72: ZEISLER, STEFAN, KUMLIN, JOEL OSCAR OLSSON
33: US 31: 62/538,954 32: 2017-07-31
54: SYSTEM, APPARATUS AND METHOD FOR PRODUCING GALLIUM RADIOISOTOPES ON PARTICLE ACCELERATORS USING SOLID TARGETS AND GA-68 COMPOSITION PRODUCED BY SAME

00: -
The present invention is directed to a system, apparatus, and method for producing gallium radioisotopes on particle accelerators using solid targets and a Ga-68 composition produced by this method. The solid target assembly apparatus has a metal disc and a zinc portion on the top of the disc. The apparatus is made by preparing a quantity of zinc, depositing it onto a metal disc, melting the zinc, and allowing it to cool and solidify. The disc surface may be prepared before applying zinc to it in order to facilitate bonding between the substrate and the zinc. Ga-68 is produced by placing the apparatus in a cyclotron target irradiation station, irradiating it, separating it from the irradiated Zn, and collecting and storing the separated Ga-68. The Ga-68 composition has the following quotient of activity quantity ratios: Ga-67/Ga-68 less than 1, and Ga-67/Ga-68 less than 1.

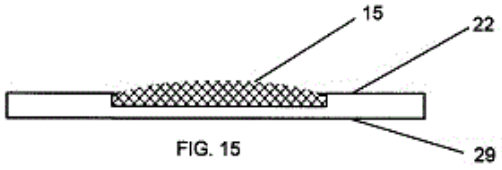

FIG. 15

21: 2020/01152. 22: 2020/02/24. 43: 2023/08/23
51: C02F
71: EVOQUA WATER TECHNOLOGIES LLC
72: OLSON, BRANDON MARTIN
33: US 31: 62/558,570 32: 2017-09-14
54: SIMULTANEOUS NITRIFICATION/DENITRIFICATION (SNDN) IN SEQUENCING BATCH REACTOR APPLICATIONS
00: -
A method of operating a sequencing batch reactor process includes introducing wastewater to be treated into the sequencing batch reactor and subjecting the wastewater to treatment in the sequencing batch reactor in an aerated anoxic mode in in which a quantity of oxygen is supplied at a level insufficient to meet a biological oxygen demand of the wastewater, but sufficient to cause simultaneous nitrification and denitrification reactions to occur in the wastewater.

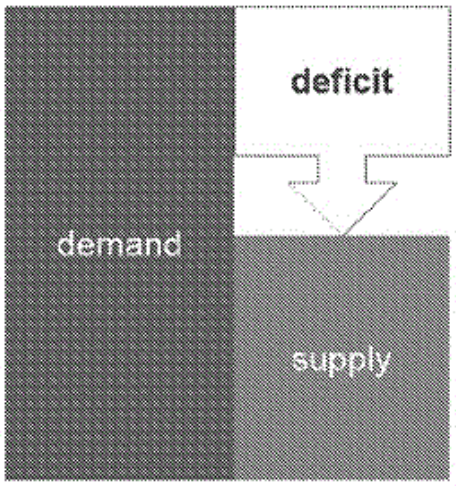

21: 2020/01256. 22: 2020/02/27. 43: 2023/08/23
51: A61K; A61P; C07K; C12N
71: MITSUBISHI TANABE PHARMA CORPORATION, HYOGO COLLEGE OF MEDICINE
72: YOSHIMOTO, TOMOHIRO, PALUMBO, JOSEPH M, STONE, I VIOLETTA, KATO, TORU, YASUDA, KOUBUN
33: US 31: 62/552,594 32: 2017-08-31
54: IL-33 ANTAGONIST-CONTAINING THERAPEUTIC AGENT FOR ENDOMETRIOSIS
00: -
To provide a therapeutic agent for endometriosis and adenomyosis. IL-33 was identified as an exacerbating factor in endometriosis and adenomyosis, and an IL-33 antagonist, which is capable of inhibiting the function of IL-33, was found to be useful for treating, preventing or alleviating endometriosis and uterine adenomyosis.

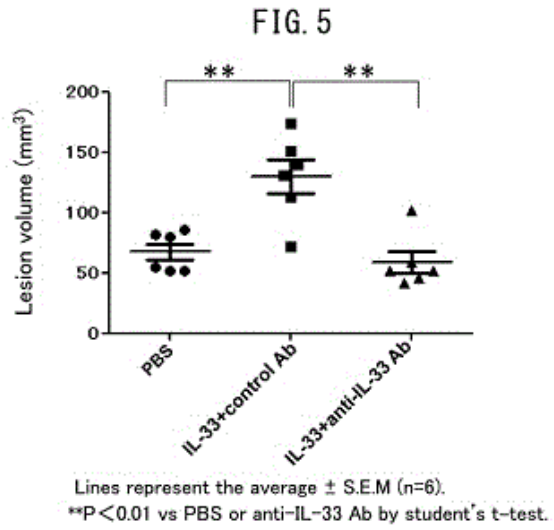

21: 2020/01258. 22: 2020/02/27. 43: 2023/08/23
51: A61K; A61P
71: EAGLE PHARMACEUTICALS, INC.
72: HEPNER, ADRIAN
33: US 31: 62/554,049 32: 2017-09-05
33: US 31: 62/674,406 32: 2018-05-21
54: METHODS OF USING DANTROLENE TO TREAT NERVE AGENT EXPOSURE
00: -
The disclosure is directed to methods of treating subjects exposed to nerve agents with dantrolene, or a pharmaceutically acceptable salt thereof.

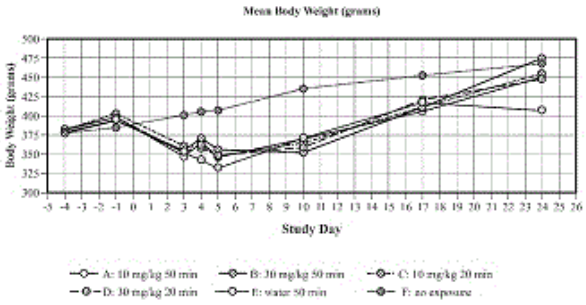

21: 2020/01315. 22: 2020/02/28. 43: 2023/08/23
51: C11D; D06M
71: UNILEVER GLOBAL IP LIMITED
72: BOARDMAN, CHRISTOPHER, UNALI, GIOVANNI FRANCESCO
33: EP 31: 18173611.7 32: 2018-05-22
33: EP 31: 17196293.9 32: 2017-10-13
54: AQUEOUS SPRAY COMPOSITION
00: -
An aqueous fabric spray composition, comprising: a. 1 - 10 w.t. % silicone, wherein the silicone is in the form of an emulsion b. 0.01 - 1.5 w.t.% setting polymer.

21: 2020/01320. 22: 2020/02/28. 43: 2023/08/23
51: A61K; C07D
71: OPTIKIRA LLC, THE REGENTS OF THE UNIVERSITY OF CALIFORNIA
72: KEENAN, RICHARD M, BACKES, BRADLEY J, MALY, DUSTIN J, REYNOLDS, CHARLES, WHITTAKER, BEN, KNIGHT, JAMIE, SUTTON, JON, HYND, GEORGE, PAPA, FEROZ R, OAKES, SCOTT A
33: US 31: 62/553,320 32: 2017-09-01
54: COMPOUNDS AND COMPOSITIONS FOR IRE1 INHIBITION
00: -
The present invention provides novel compounds, compositions and methods for treating or preventing an IRE1α-related disease or disorder. In certain embodiments, the disease or disorder is selected from the group consisting of a neurodegenerative disease, a demyelinating disease, cancer, an eye disease, a fibrotic disease, and diabetes.

21: 2020/01321. 22: 2020/02/28. 43: 2023/08/23
51: C07D; A61P; A61K
71: VANDERBILT UNIVERSITY
72: CONN, P JEFFREY, LINDSLEY, CRAIG W, FELTS, ANDREW, NISWENDER, COLLEEN M, CAPSTICK, RORY A, SPEARING, PAUL K, BOLLINGER, SEAN
33: US 31: 62/546,290 32: 2017-08-16
54: INDAZOLE COMPOUNDS AS MGLUR4 ALLOSTERIC POTENTIATORS, COMPOSITIONS, AND METHODS OF TREATING NEUROLOGICAL DYSFUNCTION
00: -
Indazole compounds which are useful as allosteric potentiators/positive allosteric modulators of the metabotropic glutamate receptor subtype 4 (mGluR4); synthetic methods for making the compounds; pharmaceutical compositions comprising the compounds; and methods of using the compounds, for example, in treating neurological and psychiatric disorders or other disease states associated with glutamate dysfunction.

21: 2020/01417. 22: 2020/03/05. 43: 2023/08/23
51: B01J; B01D; F01N
71: BASF CORPORATION

72: PETROVIC, IVAN, PRASAD, SUBRAMANIAN, PALAMARA, JOSEPH PHILIP
33: US 31: 62/555,215 32: 2017-09-07
54: ZEOLITE WITH REDUCED EXTRA-FRAMEWORK ALUMINUM
00: -
The present disclosure generally provides a catalyst composition comprising a zeolite containing iron and/or copper with a reduced amount of extra-framework aluminum. The catalyst composition is useful to catalyze the reduction of nitrogen oxides in exhaust gas in the presence of a reductant.

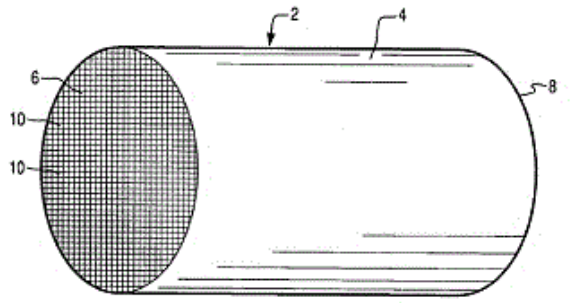

21: 2020/01445. 22: 2020/03/06. 43: 2023/08/22
51: A61K; A61P; C12N
71: TAIHO PHARMACEUTICAL CO., LTD.
72: ABE, NAOMI, HASAKO, SHINICHI
33: JP 31: 2017-168606 32: 2017-09-01
54: EXON 18 AND/OR EXON 21 MUTANT EGFR SELECTIVE INHIBITOR
00: -
An anti-tumor agent for treating patients with malignant tumors that express EGFR having at least one mutation selected from the group consisting of exon 18 G719X mutations, exon 18 E709X mutations, and exon 21 L861X mutations, the anti-tumor agent containing (S)-N-(4-amino-6-methyl-5-(quinolin-3-yl)-8,9-dihydropyrimido[5,4-b]indolizin-8-yl)acrylamide or a salt thereof. [X represents a discretionary amino acid residue.]

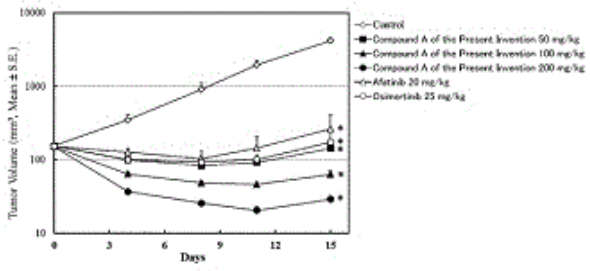

21: 2020/01571. 22: 2020/03/12. 43: 2023/08/22
51: A01N; A01P
71: CORTEVA AGRISCIENCE LLC
72: BELL, JARED, BUYSSE, ANN M, DAEUBLE, JOHN F, ECKELBARGER, JOSEPH D, EPP, JEFFREY B, IRVINE, NICHOLAS M, KISTER, JEREMY, LO, WILLIAM C, LOSO, MICHAEL R, LOWE, CHRISTIAN T, ROHANNA, JOHN C, SATCHIVI, NORBERT M, SIDDALL, THOMAS L, STEWARD, KIMBERLY M, YERKES, CARLA N
33: US 31: 62/577,972 32: 2017-10-27
54: PYRIDINE AND PYRIMIDINE CARBOXYLATE HERBICIDES AND METHODS OF USE THEREOF
00: -
Provided herein are pyridine and pyrimidine carboxylates and their derivatives, and compositions and methods of use thereof as herbicides.

21: 2020/01681. 22: 2020/03/17. 43: 2023/08/23
51: G06T; G06F
71: CMTE DEVELOPMENT LIMITED
72: SENNERSTEN, CHARLOTTE, LINDLEY, CRAIG A, EVANS, BEN, GRACE, ALEX, WISE, JULIAN
33: AU 31: 2017903626 32: 2017-09-07
54: SPATIAL DATA PROCESSING SYSTEM AND METHOD
00: -
A system for handling 3 dimensional spatial information, the system including: a specialised application layer for the production of visual interactive applications associated with the 3 dimensional spatial information; a generic foundation client layer providing 3 dimensional spatial information interrogation routines, including a message passing interface; and a voxel server for interconnected to said generic foundation client via said message passing interface for the storage of 3 dimensional spatial information as a voxel data base.

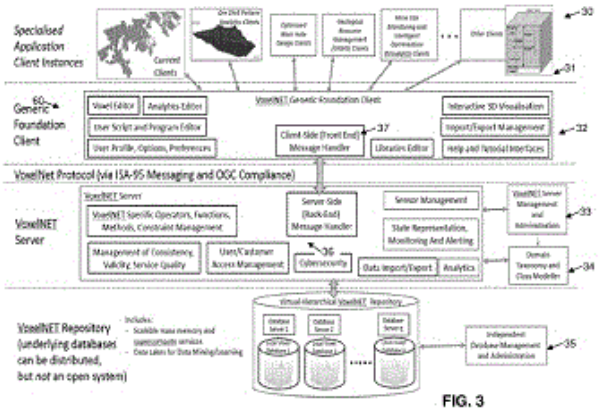

FIG. 3

21: 2020/01720. 22: 2020/03/18. 43: 2023/08/11
51: A61K; A61Q
71: Colgate-Palmolive Company
72: FEI, Lin, MANDADI, Prakasarao, CHOPRA, Suman
54: ORAL CARE COMPOSITIONS AND METHODS FOR INCREASING STABILITY OF THE SAME
00: -
Anhydrous oral care compositions and methods for preventing phase separation in the anhydrous oral care composition are disclosed. The oral care composition may include an orally acceptable vehicle, a thickening system, and a whitening agent. The orally acceptable vehicle may include propylene glycol, and the thickening system may include a polymeric thickener. The polymeric thickener may be or include a copolymer of 2-acrylamidomethylpropanesulphonic acid or a salt thereof.

21: 2020/01755. 22: 2020/03/19. 43: 2023/08/11
51: A61K; A61Q
71: Colgate-Palmolive Company
72: PAN, Guisheng, ONTUMI, Dennis, FEI, Lin, CHOPRA, Suman, BRINZARI, Tatiana, STRANICK, Michael, PAN, Long
33: US 31: 62/592,874 32: 2017-11-30
54: ORAL CARE COMPOSITIONS
00: -
Compounds and methods for preparing and using the compounds are disclosed herein. The method for preparing the compounds may include contacting a metal ion or salt thereof with an alkali metal polyphosphate salt in an aqueous medium. The method may also include adding a base to increase a pH of the aqueous medium.

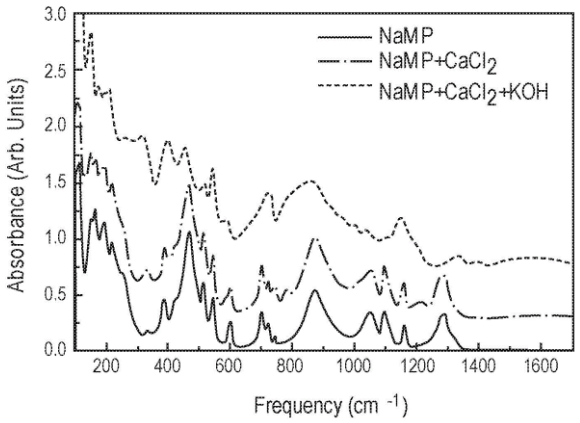

21: 2020/01816. 22: 2020/03/23. 43: 2023/08/11
51: A61K; A61Q
71: Colgate-Palmolive Company
72: SZEWCZYK, Gregory, EVANS, Lauren
54: DENTIFRICE COMPRISING ZINC - AMINO ACID COMPLEX
00: -
Disclosed herein are dentifrices comprising a zinc - amino acid complex together with a thickening system comprising a non-ionic thickening agent, which have a pH greater than 8.0. Methods of using the dentifrices are also provided.

21: 2020/01824. 22: 2020/03/23. 43: 2023/08/18
51: A61K; A61P; A61Q; C11D
71: Colgate-Palmolive Company
72: DUBOVOY, Viktor, MAO, Junhong, SUBRAMANYAM, Ravi, PAN, Long, BRINZARI, Tatiana
33: US 31: 62/607,355 32: 2017-12-19
54: PERSONAL CARE COMPOSITIONS
00: -
Described herein are complexes comprising a cationic antibacterial agent and a metal salt, personal care compositions comprising same; along with methods of making and using these complexes and compositions.

21: 2020/01909. 22: 2020/03/24. 43: 2023/08/02
51: A61K; A61Q
71: GABA International Holding GmbH
72: FONTERS, Jessie, LOETSCHER, Jeannine, BRUNELLA, Andre
54: ORAL CARE COMPOSITIONS
00: -
Oral care compositions and methods for reducing dental sensitivity or at least partially occluding dentin

tubules of teeth in a subject are described herein. The oral care compositions may include an orally acceptable vehicle and a silica blocking agent configured to at least partially occlude dentin tubules of teeth. The silica blocking agents may include silica particles having a particle size distribution (D95) less than or equal to 7 μm and a BET surface area of greater than or equal to 150 m2/g.

21: 2020/02074. 22: 2020/05/04. 43: 2023/08/23
51: H04N
71: VID SCALE, INC.
72: XIU, XIAOYU, HE, YUWEN, YE, YAN
33: US 31: 62/580,184 32: 2017-11-01
33: US 31: 62/623,001 32: 2018-01-29
33: US 31: 62/678,576 32: 2018-05-31
33: US 31: 62/690,661 32: 2018-06-27
54: SUB-BLOCK MOTION DERIVATION AND DECODER-SIDE MOTION VECTOR REFINEMENT FOR MERGE MODE
00: -
Systems, methods, and instrumentalities for sub-block motion derivation and motion vector refinement for merge mode may be disclosed herein. Video data may be coded (e.g., encoded and/or decoded). A collocated picture for a current slice of the video data may be identified. The current slice may include one or more coding units (CUs). One or more neighboring CUs may be identified for a current CU. A neighboring CU (e.g., each neighboring CU) may correspond to a reference picture. A (e.g., one) neighboring CU may be selected to be a candidate neighboring CU based on the reference pictures and the collocated picture. A motion vector (MV) (e.g., collocated MV) may be identified from the collocated picture based on an MV (e.g., a reference MV) of the candidate neighboring CU. The current CU may be coded (e.g., encoded and/or decoded) using the collocated MV.

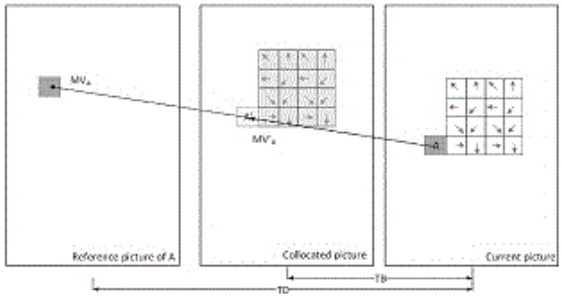

21: 2020/02083. 22: 2020/05/04. 43: 2023/08/07
51: C07K
71: BIO-SOURCING S.A.
72: FREICHELS, Régine, FAVRE-BULLE, Olivier, CÔTE, François, MÉROT, Bertrand
33: EP 31: 17201536.4 32: 2017-11-14
54: ANTIBODY PURIFICATION
00: -
The present invention relates to methods for purifying heterologous antibodies from caprine milk, such as goat milk. The present invention includes protein A based affinity chromatography to obtain purified transgenically expressed antibodies, in particular concentrates free from endogenous caprine antibodies.

21: 2020/02129. 22: 2020/05/04. 43: 2023/08/22
51: A61K A61P
71: TUBE PHARMACEUTICALS GMBH, MECOX CUREMED CO., LTD.
72: RICHTER, Wolfgang
33: EP 31: 17194987.8 32: 2017-10-05
54: ORAL BENDAMUSTINE FORMULATIONS
00: -
The present invention relates to an oral pharmaceutical composition comprising bendamustine in combination with a modified cyclodextrin, such as, e.g., methyl-ß-cyclodextrin or hydroxypropyl-ß-cyclodextrin. It has surprisingly been found in the context of the invention that such compositions exhibit a greatly improved oral bioavailability, which renders them particularly advantageous for oral therapeutic application, e.g., in the treatment of cancer.

21: 2020/02213. 22: 2020/05/04. 43: 2023/08/11
51: B29D; E02D
71: Tensar Technologies Limited
72: CURSON, Andrew

33: GB 31: 1715202.6 32: 2017-09-20
54: GEOGRIDS
00: -
There is disclosed a geogrid in the form of an integral, mesh structure comprising molecularly orientated polymeric material, the mesh structure formed of interconnecting mesh defining elements including elongate tensile elements wherein the molecular orientation of the mesh structure is uniform throughout the extent thereof. A method of making the geogrid is also described and its use in stabilizing, reinforcing or strengthening a mass of particulate material.

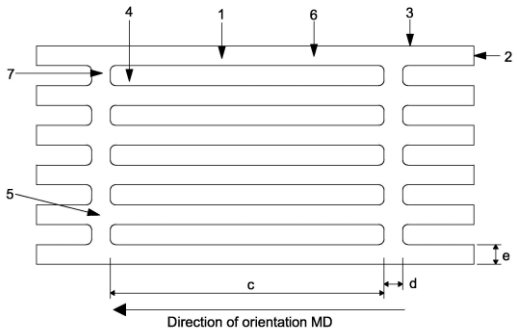

21: 2020/02317. 22: 2020/05/04. 43: 2023/08/22
51: B01L; G01N
71: HEMOCUE AB
72: WAHLQVIST, CAROLINE, JÖNSSON, PATRIK, WERNERSSON, OLA
33: SE 31: 1730309-0 32: 2017-11-09
54: SAMPLE ACQUIRING DEVICE HOLDER FOR A HOUSING OF AN ANALYSIS APPARATUS
00: -
The invention relates to a sample acquiring device holder (3) for a housing (2) of an analysis apparatus (1). The sample acquiring device holder (3) may comprise an activating element (5) and a reception recess (11) for receiving a sample acquiring device (4). A first portion (10) of the activating element (5) may protrude into the reception recess (11), if the activating element (5) is in a non-activating position. The activating element (5) may be adapted to be moved into an activating position by the sample acquiring device (4), if the sample acquiring device (4) is inserted into an intended measurement position within the reception recess (11). The activating element (5) may be adapted to activate a measurement triggering element (15), if the activating element (5) is in its activating position, such that the measurement triggering element (15) activates a measurement of the analysis apparatus (1).

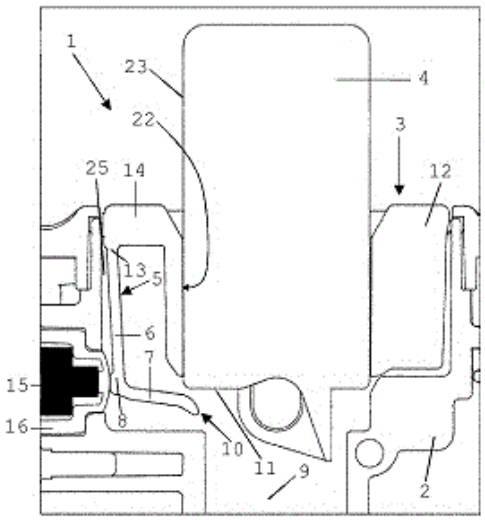

21: 2020/02325. 22: 2020/05/04. 43: 2023/08/22
51: C07K; A61P
71: MAVERICK THERAPEUTICS, INC.
72: MAY, CHAD, DUBRIDGE, ROBERT B, VINOGRADOVA, MAIA, PANCHAL, ANAND
33: US 31: 62/586,627 32: 2017-11-15
33: US 31: 62/587,318 32: 2017-11-16
33: US 31: 62/555,943 32: 2017-09-08
54: CONSTRAINED CONDITIONALLY ACTIVATED BINDING PROTEINS
00: -
The invention relates to COnditional Bispecific Redirected Activation constructs, or COBRAs, that are administered in an active pro-drug format. Upon exposure to tumor proteases, the constructs are cleaved and activated, such that they can bind both tumor target antigens (TTAs) as well as CD3, thus recruiting T cells expressing CD3 to the tumor, resulting in treatment.

21: 2020/02361. 22: 2020/05/04. 43: 2023/08/22
51: A61K; A61P; C07D
71: Daiichi Sankyo Company, Limited
72: TANIGUCHI, Toru, IWAMOTO, Osamu, SAITO, Keiji, NAKAJIMA, Katsuyoshi, OGAWA, Yasuyuki, KURIKAWA, Nobuya, NAGATA, Seiko, ITO, Kaori, KIOI, Eriko
33: JP 31: 2017-176891 32: 2017-09-14
54: COMPOUND HAVING CYCLIC STRUCTURE
00: -

The present invention addresses the problem of providing a compound having an anti-inflammatory effect, a pharmacologically acceptable salt thereof, etc. The means for solution according to the present invention is a compound represented by general formula (I) or a pharmacologically acceptable salt thereof. (The symbols in the formula are defined as follows. A: benzene, etc.; E: -CH2-, etc.; G: a five-membered aromatic heterocycle, etc.; X: cyclohexane, etc.; J: a five-membered aromatic heterocycle, etc.; Y: a phenyl group, etc.; R1, R2, and R3: a halogen atom, etc.; R4: a C1-6 alkyl group, etc.; R5: a hydrogen atom, etc.; R6a, R6b, R6c, and R6d: a hydrogen atom, etc.; R7: a hydrogen atom, etc.; R8: a hydrogen atom, etc.; n1, n2, n3: 1, etc.)

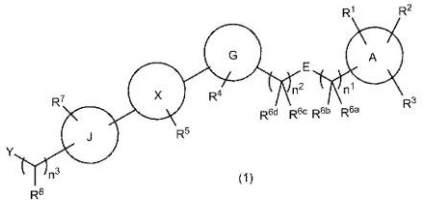

(1)

21: 2020/02372. 22: 2020/05/04. 43: 2023/08/23
51: A61K; C07D
71: Boehringer Ingelheim International GmbH, Hydra Biosciences, LLC
72: BOUYSSOU, Thierry, GOTTSCHLING, Dirk, HEINE, Niklas, SMITH KEENAN, Lana Louise, LOWE, Michael D., RAZAVI, Hossein, SARKO, Christopher Ronald, SURPRENANT, Simon, TAKAHASHI, Hidenori, TURNER, Michael Robert, WU, Xinyuan
33: US 31: 62/577,883 32: 2017-10-27
54: PYRIDINE CARBONYL DERIVATIVES AND THERAPEUTIC USES THEREOF AS TRPC6 INHIBITORS
00: -
The invention relates to compounds of formula (I), and pharmaceutically acceptable salts thereof, wherein R1 to R7, A, Y and L are as defined herein. The invention also relates to pharmaceutical compositions comprising these compounds, methods of using these compounds in the treatment of various diseases and disorders, processes for preparing these compounds and intermediates useful in these processes.

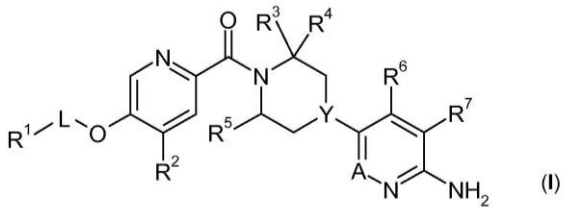

(I)

21: 2020/02378. 22: 2020/05/04. 43: 2023/08/23
51: A61K
71: Bayer Consumer Care AG, Bayer Pharma Aktiengesellschaft
72: FREUNDLIEB, Julia, JACOBS, Tia
33: EP(DE) 31: 17190117.6 32: 2017-09-08
54: FORMULATIONS OF COPANLISIB
00: -
The present invention relates to : a method of preparing a stable, copanlisib-containing aqueous bulk solution suitable for lyophilisation and for therapeutic applications; a stable, copanlisib-containing bulk solution, of increased solubility which is directly suitable for lyophilisation; a method of lyophilizing such a copanlisib-containing aqueous bulk solution; a stable, lyophilized, copanlisib-containing solid, in particular powder or cake, particularly containing a therapeutic dose of copanlisib in one or two containers, particularly one sealed container; a method of reconstituting such lyophilisates; and a stable, reconstituted, copanlisib-containing solution of increased solubility, suitable for further dilution and for therapeutic applications.

21: 2020/02456. 22: 2020/05/05. 43: 2023/08/22
51: B01J; B01D; C01B
71: BASF SE
72: RIEMANN, CHRISTIAN, PARVULESCU, ANDREI-NICOLAE, BOEHLING, RALF, MUELLER, ULRICH, LUETZEL, HANS-JUERGEN, CLADE, STEFANIE, SCHAPPERT, CHRISTOPH
33: EP 31: 17203017.3 32: 2017-11-22
54: ZEOLITE SYNTHESIS IN A REACTOR WITH CONTROLLED VELOCITY PROFILE
00: -
The present invention relates to a process for the preparation of a zeolitic material, as well as to a catalyst per se as obtainable or obtained according to said process. Furthermore, the present invention relates to the use of the zeolitic material, in particular as a catalyst.

21: 2020/02531. 22: 2020/05/07. 43: 2023/08/23
51: A61K; A61P; C07F
71: Principia Biopharma Inc.
72: LOU, Yan, OWENS, Timothy Duncan, BRAMELD, Kenneth Albert, GOLDSTEIN, David Michael
33: US 31: 62/587,376 32: 2017-11-16
54: IMMUNOPROTEASOME INHIBITORS
00: -
Provided herein are compounds, such as a compound of Formula (I), or a pharmaceutically acceptable salt thereof, that are immunoproteasome (such as LMP2 and LMP7) inhibitors. The compounds described herein can be useful for the treatment of diseases treatable by inhibition of immunoproteasomes. Also provided herein are pharmaceutical compositions containing such compounds and processes for preparing such compounds.

21: 2020/02550. 22: 2020/05/07. 43: 2023/08/22
51: B01F
71: THE FALCON PROJECT LTD
72: JUBB, DANIEL, PRICE, MARK, PRICE, DAVID, LEWTAS, KENNETH
33: GB 31: 1716490.6 32: 2017-10-09
54: ACOUSTIC MIXERS
00: -
A processing vessel (1) provided with a material inlet (2, 3, 4, 5) and a processed material outlet (25) wherein the material flows continuously through the vessel which is split into a series of zones (6, 7, 8) through which the material passes wherein the zones are shielded from each other by controlling the rate at which the material flows and an increasing level of vacuum is applied in consecutive zones and the system is provided with acoustic energy which imparts energy to the process material by virtue of the contact between the zone dividers and the process material and processing material in such a vessel.

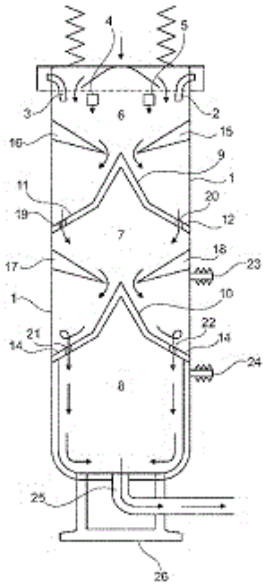

21: 2020/02595. 22: 2020/05/08. 43: 2023/08/03
51: H04W H04L
71: TELEFONAKTIEBOLAGET LM ERICSSON (PUBL)
72: DA SILVA, Icaro L. J., MÄÄTTÄNEN, Helka-Liina, SIOMINA, Iana, KAZMI, Muhammad, FAN, Rui
33: US 31: 62/587,360 32: 2017-11-16
54: RADIO LINK MONITORING/RADIO LINK FAILURE RE-CONFIGURATION UPON BANDWIDTH PARTS SWITCHING
00: -
A method in a user equipment (UE) (110) is disclosed. The method comprises obtaining (701) one or more radio link monitoring configurations, each radio link monitoring configuration associated with at least one bandwidth part. The method comprises determining (702) that the UE is to switch from a source bandwidth part to a target bandwidth part. The method comprises performing (703) radio link monitoring on the target bandwidth part according to an obtained radio link monitoring configuration associated with the target bandwidth part.

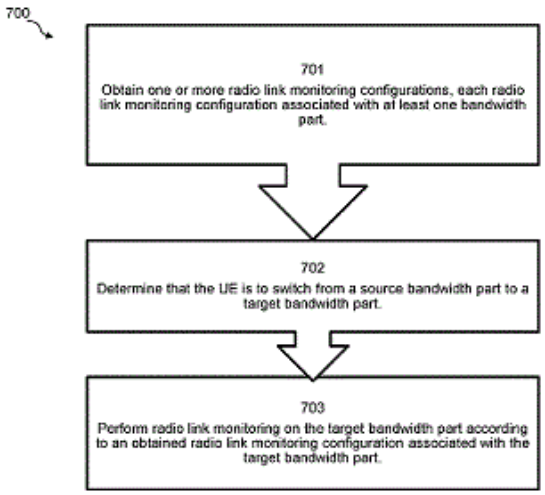

21: 2020/02611. 22: 2020/05/11. 43: 2023/08/23
51: C07D; A61K
71: F. HOFFMANN-LA ROCHE AG, GENENTECH, INC.
72: IDING, HANS, REENTS, REINHARD, SCALONE, MICHELANGELO, GOSSELIN, FRANCIS
33: EP 31: 13193030.7 32: 2013-11-15
54: PROCESSES FOR THE PREPARATION OF PYRIMIDINYLCYCLOPENTANE COMPOUNDS
00: -
The present invention relates to a process for the preparation of a compound of formula (I), wherein $R^1$is as defined herein, which is useful as an intermediate in the preparation of active pharmaceutical compounds.

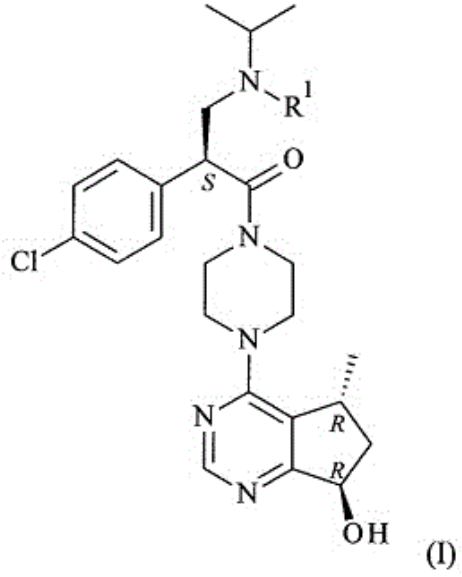

(I)

21: 2020/02746. 22: 2020/05/13. 43: 2023/08/23
51: B32B; C09J; G09F
71: Actega North America Technologies, Inc.
72: MUNNELLY, Heidi M., VOICECHOVSKI, Nikolai A., LUX, Benjamin
33: US 31: 62/588,027 32: 2017-11-17
54: THIN FILM ADHESIVE LABELS AND METHODS OF MAKING THEREOF
00: -
Thin film labels, systems, and methods of making and using thereof are described. The thin film systems contain a label and a carrier film, where the label contains an overprint layer, indicia, and an adhesive layer. The carrier film may be coated on one or both sides with a release liner. The adhesive layer can be any suitable adhesive, such as a pressure sensitive adhesive, a fluid activatable adhesive, a heat activated adhesive, or a contact activated adhesive. The label is formed by printed or coating one or more layers of precursor material on the carrier film using standard printers. Suitable precursor materials include, but are not limited to epoxys, solvent cast films, polyurethane dispersions, such as acrylic-urethane hybrid polymer dispersions and polyester-polyurethane dispersions. After the overprint layer dries or is cured, the indicia are printed onto the overprint layer, then the adhesive is coated on top of the indicia.

21: 2020/02779. 22: 2020/05/14. 43: 2023/08/22
51: C07D; A61P; A61K
71: EAGLE RESEARCH LABS LIMITED
72: WESCOTT, CHARLES, HEPNER, ADRIAN, LARSON, ALYSSA
33: US 31: 62/674,422 32: 2018-05-21
33: US 31: 62/575,124 32: 2017-10-20
54: DANTROLENE PRODRUGS AND METHODS OF THEIR USE
00: -
The disclosure is directed to dantrolene prodrugs, compositions thereof, and methods of their use in the treatment of disease.

21: 2020/02832. 22: 2020/05/15. 43: 2023/08/21
51: A01N; A01P
71: Bayer Aktiengesellschaft
72: CEREZO-GALVEZ, Silvia, MARIENHAGEN, Christian, WECKWERT, Holger, THIELERT, Wolfgang, JOHN, Marita
33: EP(DE) 31: 17197085.8 32: 2017-10-18
54: ACTIVE COMPOUND COMBINATIONS HAVING INSECTICIDAL/ACARICIDAL PROPERTIES
00: -
The present invention relates to novel active compound combinations comprising at least one known compound of the formula (I) and at least one further active compound, which combinations are highly suitable for controlling animal and microbial pests such as unwanted insects and/or unwanted acarids and/or unwanted nematodes.

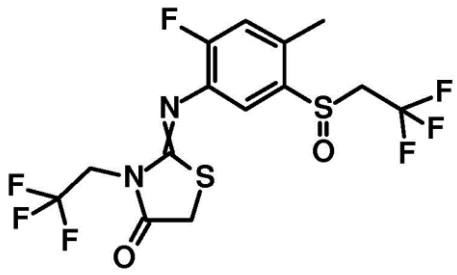

(I)

21: 2020/02845. 22: 2020/05/15. 43: 2023/08/22
51: F01N; B01J
71: BASF CORPORATION
72: HALLSTROM, KEVIN, YOUNGREN, DAVID, LI, YUEJIN
33: US 31: 62/584,341 32: 2017-11-10
54: CATALYZED SOOT FILTER WITH REDUCED AMMONIA OXIDATION
00: -
The present disclosure is directed to a system for treating an exhaust gas stream from an engine, which includes a diesel oxidation catalyst (DOC) located downstream of the engine and adapted for oxidation of hydrocarbons and carbon monoxide, an injector adapted for the addition of a reductant to the exhaust gas stream located downstream of the DOC, a catalyzed soot filter (CSF) located downstream of the 5 injector, and a selective catalytic reduction component adapted for the oxidation of nitrogen oxides located downstream of the CSF. The CSF is adapted for oxidizing hydrocarbons and includes a selective oxidation catalyst composition on a filter with high selectivity ratio for hydrocarbon oxidation: ammonia oxidation (e.g., at least 0.6).

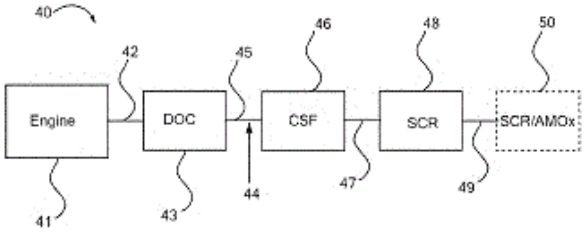

21: 2020/02897. 22: 2020/05/18. 43: 2023/08/22
51: A61K
71: EAGLE PHARMACEUTICALS, INC.
72: CHEN, FENG-JING, KRILL, STEVEN L, SHMEIS, RAMA ABU, HEPNER, ADRIAN, WESCOTT, CHARLES, JASKOWSKI, TARA, JOYCE, MICHAEL
33: US 31: 62/583,403 32: 2017-11-08
54: FULVESTRANT FORMULATIONS AND METHODS OF THEIR USE
00: -
The present disclosure provides methods of treating breast cancer including administering aqueous suspensions comprising solubilized fulvestrant, non-solubilized fulvestrant particles having one or more of an LD Dv(10) between about 1.5 and about 2.1 microns, an LD Dv(50) between about 5.5 and about 9.0 microns, and an LD Dv(90) between about 15 and about 35 microns, with the aqueous suspensions further including a surfactant, a polyvinylpyrrolidone, and a sugar alcohol, and a water-soluble excipient. The water-soluble excipient

can be an aryl-Ci-6alk-OH, a Ci-6alkyl-OH, a buffering salt, a polysorbate, a polyalkylene glycol, a Ci-i2alkylene glycol, a phosphatidylcholine, or a combination thereof.

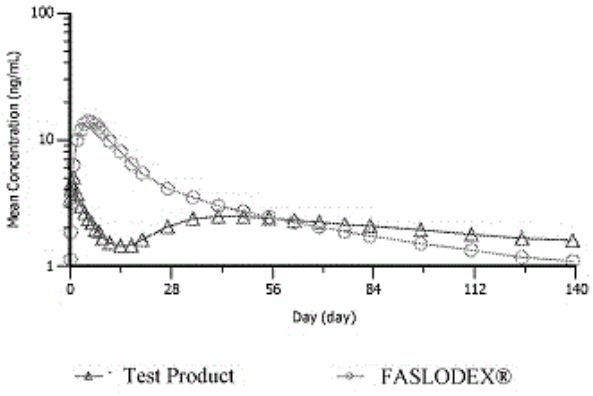

21: 2020/02951. 22: 2020/05/20. 43: 2023/08/22
51: C07K; A61K; A61P
71: CENTURION BIOPHARMA CORPORATION
72: KRATZ, FELIX, ABU AJAJ, KHALID, WARNECKE, ANNA, NOLLMANN, FRIEDERIKE I, KOESTER, STEPHAN DAVID, GARCIA FERNANDEZ, JAVIER, PES, LARA, WALTER, HEIDI-KRISTIN, MAGNUSSON, JOHANNES PALL, CHERCHEJA, SERGHEI, PEREZ GALAN, PATRICIA, MEDDA, FEDERICO, DAUM, STEFFEN JOSEF
33: US 31: 62/592,721 32: 2017-11-30
54: ALBUMIN-BINDING PRODRUGS OF AURISTATIN E DERIVATIVES
00: -
The present disclosure provides for albumin-binding prodrugs of auristatin E derivatives and uses thereof.

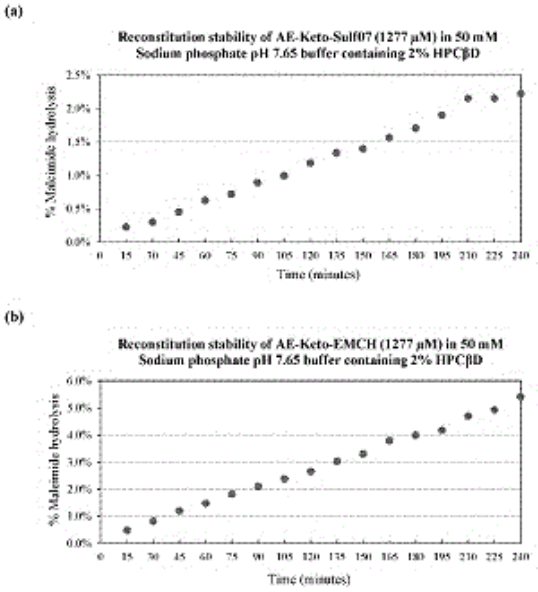

21: 2020/03001. 22: 2020/05/21. 43: 2023/08/22
51: A24F
71: Nicoventures Trading Limited
72: BRUTON, Connor, DICKENS, Colin, MOLONEY, Patrick, KORUS, Anton, SPENCER, Alfred Vincent, BLICK, Kevin David, AZZOPARDI, Anna, HEPWORTH, Richard, HARVEY, Lisa
33: GB 31: 1721447.9 32: 2017-12-20
54: ELECTRONIC AEROSOL PROVISION SYSTEM
00: -
Described is an aerosol provision device for generating aerosol for user inhalation, the aerosol provision device comprising: a first aerosol generating area and a second aerosol generating area each for receiving an aerosol precursor material; a mouthpiece from which a user inhales generated aerosol during use, wherein the mouthpiece comprises first and second mouthpiece openings; a first pathway extending from the first aerosol generating area to the first mouthpiece opening for transporting a first aerosol generated from the aerosol precursor material in the first aerosol generating area; and a second pathway extending from the second aerosol generating area chamber to the second mouthpiece opening for transporting a second aerosol generated from the aerosol precursor material in the second aerosol generating area, wherein the first and second pathways are physically isolated from one another to prevent mixing of the first and second aerosols as

the first and second aerosols are transported along the respective pathways.

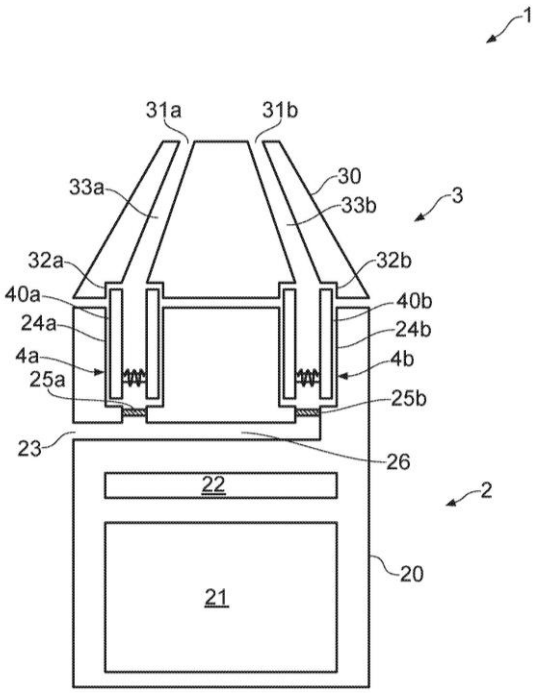

21: 2020/03022. 22: 2020/05/22. 43: 2023/08/22
51: C07H; A61K
71: MEMORIAL SLOAN-KETTERING CANCER CENTRE
72: GIN, DAVID Y, CHEA, ERIC K, FERNANDEZ-TEJADA, ALBERTO, TAN, DEREK S, LEWIS, JASON S, GARDNER, JEFFREY R, PILLARSETTY, NAGAVARAKISHORE
33: US 31: 62/005,302 32: 2014-05-30
54: MINIMAL SAPONIN ANALOGUES, SYNTHESIS AND USE THEREOF
00: -
Truncated triterpene saponin analogues containing a trisaccharide or tetrasaccharide ester are disclosed. Also disclosed are pharmaceutical compositions comprising truncated saponin analogues and synthetic methods of producing the truncated saponin analogues. Another aspect of the present application relates to a method for immunizing a subject, comprising administering to the subject the pharmaceutical composition comprising a minimal saponin analogue and an antigen.

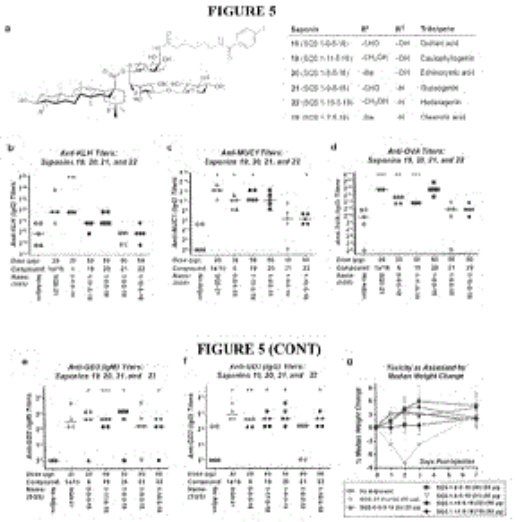

21: 2020/03146. 22: 2020/05/27. 43: 2023/08/23
51: A01N
71: SUMITOMO CHEMICAL ENVIRO-AGRO ASIA PACIFIC SDN. BHD.
72: YEE, WAI SUN, SERIT, MUNEY
33: MY 31: PI 2017001802 32: 2017-12-06
54: MOSQUITO REPELLENT COMPOSITION
00: -
The current invention relates to an insect repellent composition comprising: a vapour-active pyrethroid; a flammable bulk material; and a binder; wherein the vapour-active pyrethroid is selected from one or more of the group selected from metofluthrin, transfluthrin, dimefluthrin, meperfluthrin, renofluthrin and heptafluthrin. The invention also includes a method of preparing an insect repellent composition, an article comprising the composition, a kit comprising such an article and a method of repelling insects by igniting the composition.

21: 2020/03189. 22: 2020/05/28. 43: 2023/08/28
51: B61H
71: Westinghouse Air Brake Technologies Corporation
72: VENKATASUBRAMANIAN, Sathya Vagheeswar, WILSON, M. Frank
33: US 31: 15/829,423 32: 2017-12-01
54: SYSTEM AND METHOD FOR ADAPTIVE BRAKING
00: -
In a method of braking a number of rail cars of a train travelling on a mainline track, in response to a unique braking command provided to each rail car of

a first subset of rail cars, wherein each braking command includes a level or percentage of braking the brakes of the rail car are to assume, the brakes of the rail car are set to level or percentage of braking included in the unique braking command provided to the rail car. Thereafter, in response to a unique braking command provided to each rail car of a second, different subset of rail cars, the brakes of the rail car are set to level or percentage of braking included in the unique braking command provided to the rail car.

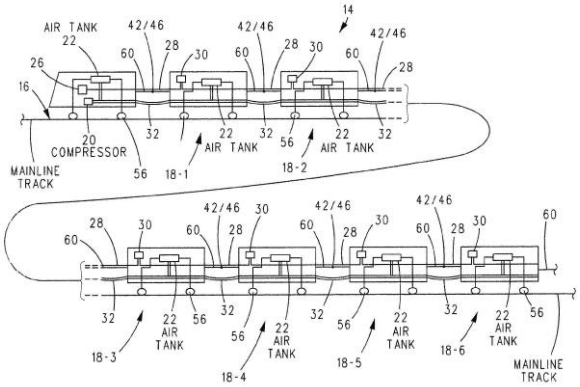

21: 2020/03249. 22: 2020/05/29. 43: 2023/08/23
51: G01N; B01D; C07K
71: REGENERON PHARMACEUTICALS, INC.
72: WANG, SHUNHAI
33: US 31: 62/624,352 32: 2018-01-31
54: A DUAL-COLUMN LC-MS SYSTEM AND METHODS OF USE THEREOF
00: -
Methods for achieving complete sequence coverage of monoclonal antibodies by trypsin digestion and dual-column LC-MS system are provided. The disclosed method improves upon current techniques for standard peptide mapping.

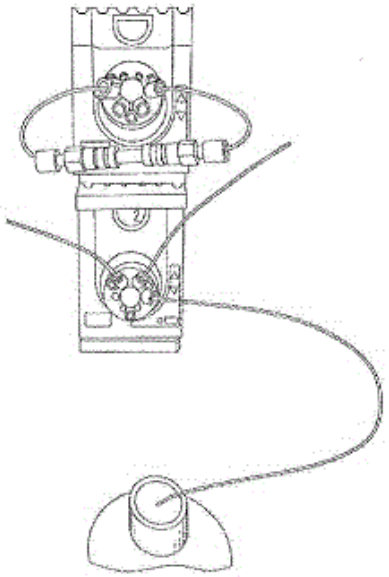

21: 2020/03281. 22: 2020/06/02. 43: 2023/09/07
51: A61K; C07D
71: Amplyx Pharmaceuticals, Inc.
72: TRZOSS, Michael, COVEL, Jonathan, SHAW, Karen Joy, WEBB, Peter
33: US 31: 62/595,894 32: 2017-12-07
33: US 31: 62/649,225 32: 2018-03-28
54: HETEROCYCLE SUBSTITUTED PYRIDINE DERIVATIVE ANTIFUNGAL AGENTS
00: -
Described herein are heterocycle substituted pyridine derivative antifungal agents and pharmaceutical compositions comprising said compounds. The subject compounds and compositions are useful for the treatment of fungal diseases and infections.

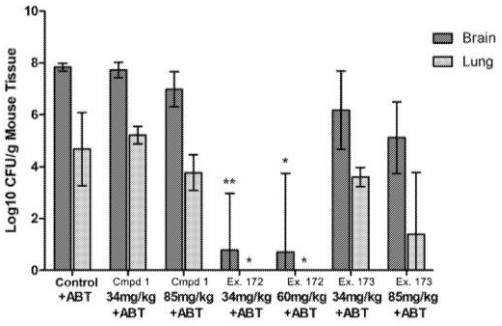

21: 2020/03320. 22: 2020/06/03. 43: 2023/08/23
51: C07K; G01N
71: REGENERON PHARMACEUTICALS, INC.
72: WANG, SHUNHAI
33: US 31: 62/624,338 32: 2018-01-31

54: GLUCURONYLATION AS ACIDIC POST-TRANSLATIONAL MODIFICATION ON THERAPEUTIC MONOCLONAL ANTIBODIES
00: -
Compositions and methods for identifying glucuronylated protein drug products are provided.

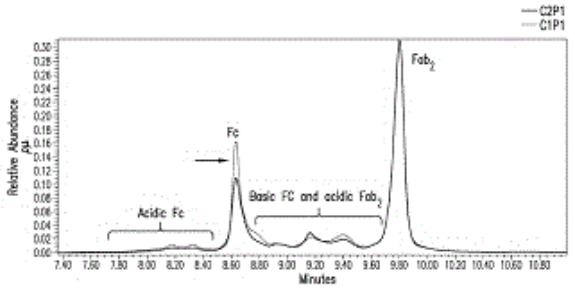

21: 2020/03475. 22: 2020/06/10. 43: 2023/08/22
51: A61K
71: IO THERAPEUTICS, INC.
72: CHANDRARATNA, Roshantha, A., VULIGONDA, Vidyasagar, Pradeep, JACKS, Thomas, WADE, Peter, THOMPSON, Andrew
33: US 31: 62/588,163 32: 2017-11-17
33: US 31: 62/671,137 32: 2018-05-14
54: COMPOUNDS AND SYNTHETIC METHODS FOR THE PREPARATION OF RETINOID X RECEPTOR-SPECIFIC RETINOIDS
00: -
Provided herein are compounds useful for the preparation of compounds that have retinoid-like biological activity. Also provided herein are processes for the preparation of compounds that have retinoid-like biological activity.

21: 2020/03596. 22: 2020/06/15. 43: 2023/08/23
51: F16B
71: VÄLINGE INNOVATION AB
72: DERELÖV, PETER
33: SE 31: 1751626-1 32: 2017-12-22
54: A SET OF PANELS, A METHOD FOR ASSEMBLY OF THE SAME AND A LOCKING DEVICE FOR A FURNITURE PRODUCT
00: -
A method, a locking device and a set of panels (1), preferably for a furniture product, including a panel (2) and an adjacent panel (3), wherein the panel (2) includes a groove (21) and at least one hole (22) connected to the groove (21) via an opening (23), the adjacent panel (3) includes a first edge (31) that is configured to be arranged in the groove (21) of the panel (2), and the panel (2) includes a locking device (4) configured to lock the first edge (31) of the adjacent panel (3) in the groove (21) of the panel (2), wherein the locking device (4) includes a cylinder (41) and a lever (42) connected to the cylinder (41), the cylinder (41) is configured to be arranged in the hole (22) in the panel (2), the cylinder (41) is an eccentric cylinder (41) including a top and bottom base(43, 44) and a locking surface (45) connecting the top and bottom base (43, 44), the cylinder (41) is configured to act as a cam when the cylinder (41) is turned about an axis (A) in the hole (22), and the lever (42) is configured to, when turned, turn the cylinder (41) about the axis (A) between a mounting position and a locking position, wherein in the mounting position the first edge (31) of the adjacent panel (3) is free to be arranged in the groove (21) of the panel (2) and in the locking position a part (45a) of the locking surface (45) of the locking device (4) extend into the groove (21) through the opening (23) and lock the adjacent panel (3) in the groove (21).

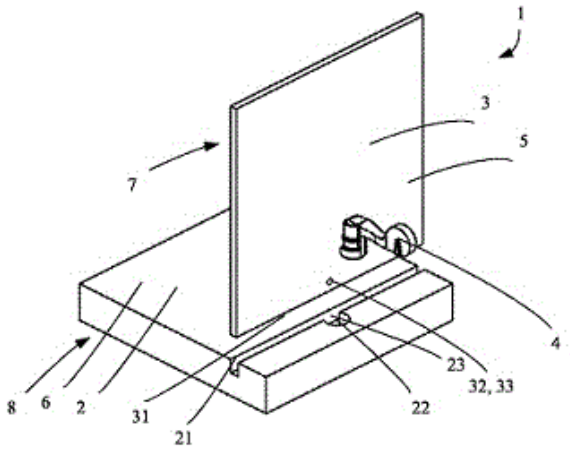

21: 2020/03638. 22: 2020/06/17. 43: 2023/08/28
51: A01N; A01P
71: Laboratoires Goëmar
72: CONAN, Céline, POTIN, Philippe, GUIBOILEAU, Anne, BESSE, Samantha, JOUBERT, Jean-Marie
33: FR 31: 17 62345 32: 2017-12-18
54: METHOD OF IDENTIFYING AND ISOLATING BIOACTIVE COMPOUNDS FROM SEAWEED EXTRACTS
00: -
A method of isolating and purifying bioactive compounds in an extract obtained from seaweed. The method involves the steps of: (a) circulating the extract through an ultrafiltration membrane having a suitable molecular weight cutoff; (b) collecting filtrate

from the extract to obtain a first filtrate fraction and a retentate; and (c) rinsing the retentate to obtain one or more additional filtrate fractions. The bioactivity of the first filtrate fraction and the additional filtrate fractions can then be evaluated to determine their efficacy on plant growth. One or more bioactive molecules isolated from an algal specie are also described in which the one or more bioactive molecules have a molecular weight in the range of about 0.15 k Da to about 1.0 k Da and are capable of enhancing or improving plant growth.

21: 2020/03831. 22: 2020/06/24. 43: 2023/08/07
51: C12N A01H A61K A61P C07K C12P
71: MEDICAGO INC.
72: LAVOIE, Pierre-Olivier, D'AOUST, Marc-André
33: US 31: 62/593,006 32: 2017-11-30
33: US 31: 62/712,744 32: 2018-07-31
54: MODIFIED NOROVIRUS VP1 PROTEINS AND VLPS COMPRISING MODIFIED NOROVIRUS VP1 PROTEINS
00: -
Nucleic acids encoding modified norovirus VP1 proteins, and VLPs comprising one or more of the modified norovirus VP1 proteins are provided. Methods for modified norovirus VP1 protein, and norovirus VLP, production in plants, portions of the plant or a plant cell, are also described.

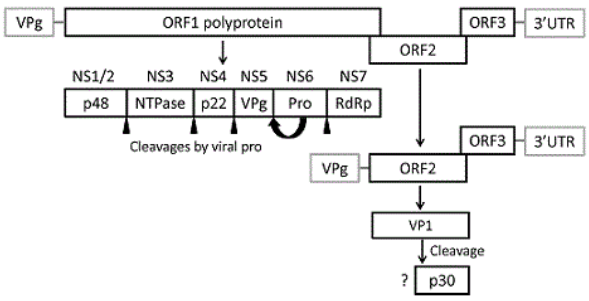

21: 2020/03848. 22: 2020/06/24. 43: 2023/08/23
51: A01H
71: CARLSBERG A/S
72: DOCKTER, CHRISTOPH, PEDAS, PAI ROSAGER, KNUDSEN, SØREN, OLSEN, OLE, MARRI, LUCIA, KRUCEWICZ, KATARZYNA, LOK, FINN, WENDT, TONI, CARCIOFI, MASSIMILIANO, THOMSEN, HANNE, RASMUSSEN, MAGNUS
33: EP 31: 17210964.7 32: 2017-12-28
54: BARLEY WITH INCREASED HYDROLYTIC ENZYME ACTIVITY
00: -
The invention relates to barley plants having a high α-amylase activity. The barley plants of the invention may for example carry a mutation in one or more α-amylase promoters, in the HRT gene, in the HBL12 gene and/or in the WRKY38 gene. The invention further provides plant products prepared from said barley plants.

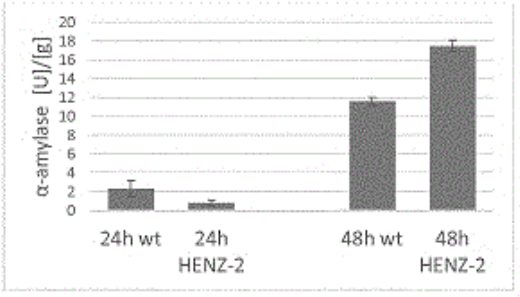

21: 2020/04022. 22: 2020/07/01. 43: 2023/08/07
51: C04B
71: CONSTRUCTION RESEARCH & TECHNOLOGY GMBH
72: MATSUMOTO, Toshimi, MAHADEVAN, Viswanath, LEI, Fang, Hua
33: CN 31: PCT/CN2017/115036 32: 2017-12-07
54: A DISPERSANT COMPOSITION
00: -
This invention provides a dispersant composition comprising: a). at least one polymer constituted of monomers having naphthalene ring and/or melamine; b). at least one polymer having carboxylic acid and/or phosphoric acid group and/or any group that is hydrolyzed into carboxylic or phosphoric; and c). at least one polymer having a structure of Formula (I): R1 is hydrogen or alky group having carbon number not less than 1, cycloalkyl or cycloalkenyl group having carbon number not less than 3, alkenyl group having carbon number not less than 2, aryl group having carbon number not less than 6; R2 is hydrogen or alky group having carbon number from 1 to 3; A is alkylene group having carbon number from3 or 4; m and n are positive numbers wherein m is more than n and the sum of m and n is more than 9 and less than 12. 1 This invention also provides a use of the dispersant composition in a mortar or concrete, and the weight percentage of the dispersant composition is from 0.01% to 2.5% based on the weight of cement in

mortar. This invention further provides an aqueous composition comprising the dispersant composition.

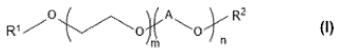

(I)

21: 2020/04176. 22: 2020/07/08. 43: 2023/08/18
51: C07D
71: BASF SE
72: MISSKE, Andrea, FLECKENSTEIN, Christoph, KLUEGLEIN, Matthias
33: EP 31: 17207791.9 32: 2017-12-15
54: PROCESS FOR PRODUCING GLYCEROL CARBONATE METHACRYLATE
00: -
The invention relates to a process for producing glycerol carbonate methacrylate, in which glycidyl methacrylate is reacted with carbon dioxide in the presence of a catalyst and a solvent, characterized in that the catalyst is potassium iodide, the solvent is acetonitrile, one or more mono-alcohols, or an arbitrary mixture of acetonitrile and one or more mono-alcohols, and the reaction of glycidyl methacrylate with carbon dioxide takes place at a pressure of 0.5 to 5 bar.

21: 2020/04221. 22: 2020/07/09. 43: 2023/08/23
51: C03B
71: OWENS-BROCKWAY GLASS CONTAINER INC.
72: GRANT, EDWARD A, KIRKMAN, THOMAS R, ROOK, RONALD
33: US 31: 15/867,261 32: 2018-01-10
54: PARISON PLUNGER ACTUATION
00: -
An apparatus (10) and a method of actuating a parison plunger includes transforming linear force applied to a plunger extension (54) into roto-translational motion of the plunger extension (54) via a cam path (98) between the plunger extension (54) and a piston (94).

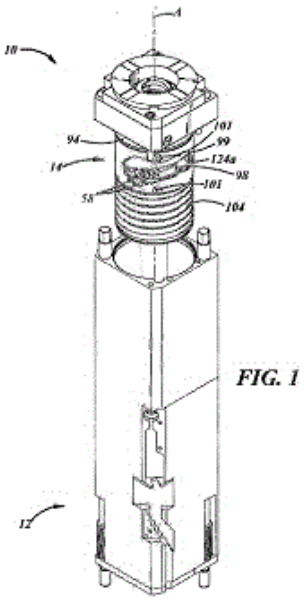

FIG. 1

21: 2020/04253. 22: 2020/07/10. 43: 2023/08/28
51: G06F
71: nChain Holdings Limited
72: CHAN, Ying, KRAMER, Dean
33: GB 31: 1720767.1 32: 2017-12-13
54: BLOCKCHAIN-IMPLEMENTED SYSTEMS AND METHODS FOR CONCURRENT BYTECODE INTERPRETATION
00: -
Computer implemented methods are provided that create and/or validate a spending blockchain transaction that includes i) a plurality of locking scripts each representing an instance of an execution thread (which can be execution threads that are forked from an execution thread represented by a locking script of a previous blockchain transaction and/or execution threads of at least one previous blockchain transaction that are managed and/or controlled for inter-thread communication and control) or ii) a locking script representing an instance of an execution thread joined from a plurality of execution threads represented at least one previous blockchain transaction. Once created and/or validated, the spending blockchain transaction can be communicated on a blockchain network for storage in a blockchain ledger. The blockchain transactions can implement thread-specific locking scripts and associated fork, join and barrier constructs for concurrent or asynchronous threads of execution. The transactions can be validated and stored in a blockchain ledger. The

blockchain transactions can be used as part of a smart contract.

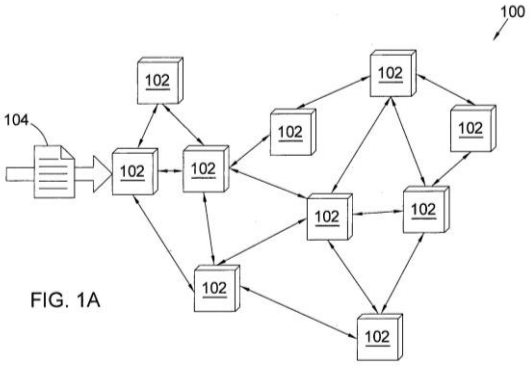

FIG. 1A

21: 2020/04344. 22: 2020/07/15. 43: 2023/08/07
51: A61K A61P
71: NANOBIOTIX
72: MEYRE, Marie-Edith, LEVY, Laurent, POTTIER, Agnès
33: EP 31: 17306826.3 32: 2017-12-19
54: NANOPARTICLES FOR USE FOR TREATING A NEURONAL DISORDER
00: -
The present invention relates to the medical field, in particular to the treatment of neurological disorders. More specifically the present invention relates to a nanoparticle or nanoparticles' aggregate for use in prevention or treatment of a neurological disease or at least one symptom thereof in a subject without exposure of the nanoparticle or nanoparticles' aggregate to an electric field, and preferably without exposure thereof to any other external activation source, wherein the nanoparticle's or nanoparticles' aggregate's material is selected from a conductor material, a semiconductor material, an insulator material with a dielectric constant eijk equal to or above 200, and an insulator material with a dielectric constant eijk equal to or below 100. It further relates to compositions and kits comprising such nanoparticles and/or nanoparticles' aggregates as well as to uses thereof without exposure thereof to an electric field, and preferably without exposure thereof to any other external activation source.

21: 2020/04386. 22: 2020/07/16. 43: 2023/08/23
51: H04L; H04W
71: TELEFONAKTIEBOLAGET LM ERICSSON (PUBL)
72: JINGYA LI, JOHAN AXNÄS, ASBJÖRN GRÖVLEN, NAGA VISHNU KANTH IRUKULAPATI, XINGQIN LIN, HONGXIA ZHAO
33: US 31: 62/710,563 32: 2018-02-16
54: METHODS PROVIDING RACH OCCASION INDICATION FOR RANDOM ACCESS PROCEDURE INITIATED BY PDCCH ORDER AND RELATED WIRELESS TERMINALS AND BASE STATIONS
00: -
A method may be provided to operate a wireless terminal (800) in communication with a network node (900). The method may include receiving (1001) a Physical Downlink Control Channel, PDCCH, order from the network node (900). The PDCCH order may include an identification for a Random Access CHannel RACH occasion to be used for a RACH message 1 preamble transmission. Moreover, the identification may include a first index that indicates a set of RACH occasions and a second index that indicates the RACH occasion associated with the set. The method may also include transmitting (1003) a Message 1 preamble to the network node (900) using the RACH occasion responsive to the PDCCH order.

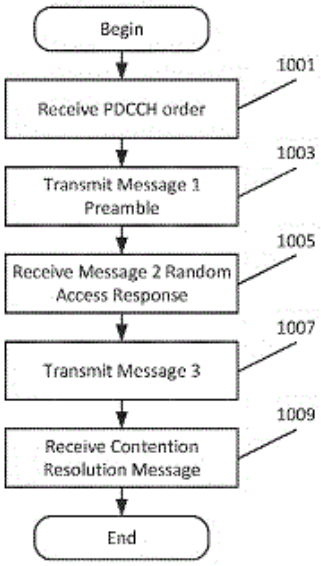

21: 2020/04559. 22: 2020/07/23. 43: 2023/09/27
51: A61K; A61P
71: UNIVERSITY OF JOHANNESBURG
72: SIMELANE, Mthokozisi
33: ZA 31: 2019/04950 32: 2019-07-29
54: PHYTOCONSTITUENT FOR TREATING DIABETES
00: -

This invention relates to an isolated phytoconstituent of Warburgia salutaris, in particular (Bertol.f.) Chiov., for use in the treatment and/or prevention of diabetes, a method of extraction thereof and a method of use thereof.



(1)

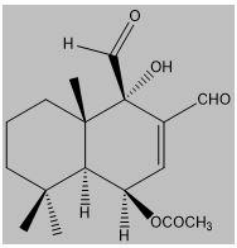

(2)

21: 2020/04679. 22: 2020/07/29. 43: 2023/08/18
51: C12N A01H
71: KWS SAAT SE & Co. KGaA, BASF SE
72: PACHECO VILLALOBOS, David, KOCH, Wolfgang, POLLET, Bruno, SCHMITZ, Oliver, KONG, Jixiang, MARTIN-ORTIGOSA, Susana
33: EP 31: 18150187.5 32: 2018-01-03
54: REGENERATION OF GENETICALLY MODIFIED PLANTS
00: -
The present invention relates to the field of plant breeding and in particular to the generation of plants from cells and other tissues. More particularly, the invention provides methods and means for improving plant regeneration, especially from transformed or genetically modified plant cells.

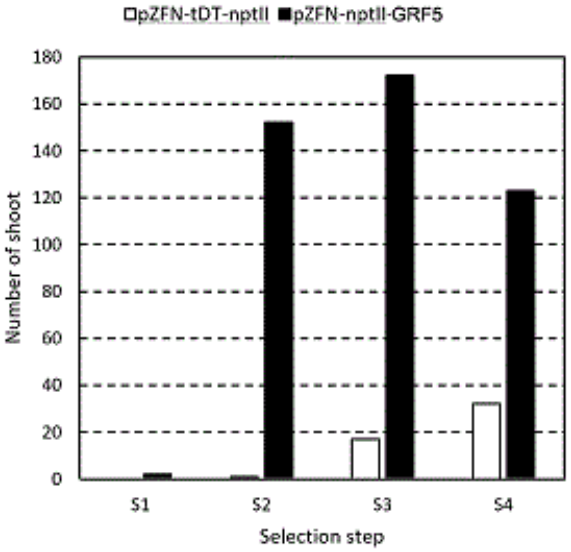

21: 2020/04979. 22: 2020/08/12. 43: 2023/08/22
51: A24F
71: Nicoventures Trading Limited
72: YILMAZ, Ugurhan, POTTER, Mark
33: GB 31: 1802591.6 32: 2018-02-16
54: AEROSOL GENERATION ARTICLE
00: -
There is described an an aerosol provision article (200) for use in an aerosol provision system (100) for generating an inhalable medium comprising an aerosol when a user draws on the aerosol provision system. The aerosol provision article comprises a structure (240) for transporting liquid from a liquid reservoir and heating the transported liquid to generate a flow of aerosol and a region (230) for receiving a substance which, in use, the flow of aerosol passes through and heats the substance before exiting the aerosol provision article, wherein the substance modifies a property of the flow of aerosol and wherein the structure is positioned so that when it heats the transported liquid to generate the flow of aerosol it also provides additional heat to the substance in the region.

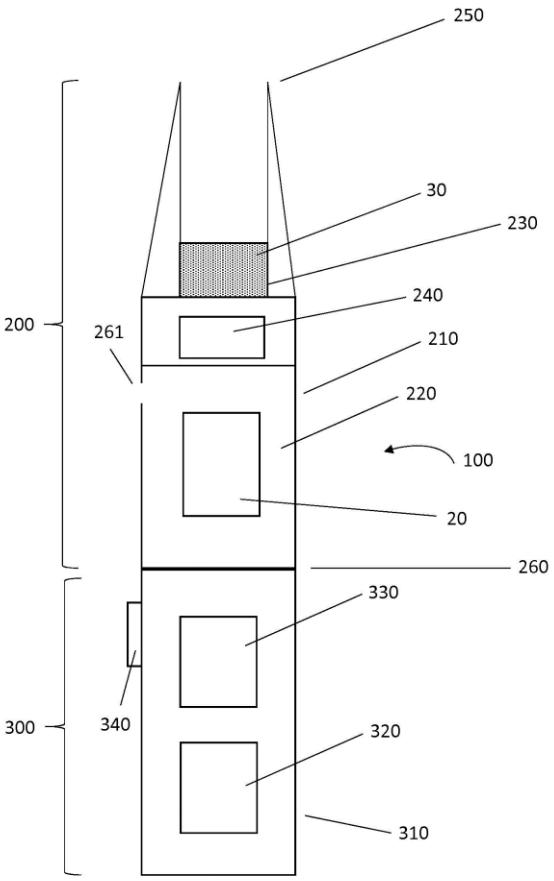

21: 2020/05242. 22: 2020/08/24. 43: 2023/09/15
51: A01G
71: LYSAA HOLDING AS
72: LYSAA, Per Aage
33: US 31: 62/625,014 32: 2018-02-01
54: HIGH-DENSITY PLANT CULTIVATION SYSTEMS AND RELATED APPARATUSES AND METHODS
00: -
A gravity-driven plant cultivation system includes: (a) a frame; (b) a plurality of vertically stacked conveyor assemblies mounted to the frame. Each conveyor assembly includes at least one gravity conveyor extending along a conveyor axis. The conveyor axis slopes downwards relative to a horizontal plane from a frame upstream end to a frame downstream end of the frame. The system further includes (c) a plurality of plant cultivation trays rollingly supported on each gravity conveyor and urged to translate along a respective conveyor axis toward the frame downstream end via gravitational force.

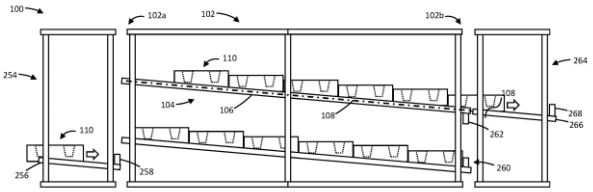

FIG. 14A

21: 2020/05400. 22: 2020/08/28. 43: 2023/08/22
51: B23B; E21B
71: J.H. FLETCHER & CO.
72: BURGESS, William Andrew, BURGESS, Timothy D., CRUM, Lyle Abraham, BISE, Douglas Edward
33: US 31: 62/625,605 32: 2018-02-02
33: US 31: 62/743,196 32: 2018-10-09
54: QUICK-RELEASE COUPLING FOR DRILLING AND RELATED METHODS
00: -
An apparatus in the form of an adapter for forming a connection comprising a first part adapted for coupling with a second part by a quick-release coupling formed by a first projection of the first part having an at least partial dovetail shape and a recess of the second part having an at least partial dovetail shape. An opening in the recess is adapted for receiving the projection in an axial direction. In other embodiments, the adapter is: (1) frictionally enhanced for engaging an internal portion of the drilling element; (2) includes a radial projection elongated in an axial direction for engaging the internal portion of the one drilling element; and/or (3) has a cutter for scoring an internal portion of the one drilling element upon being inserted therein and rotated. An adapter is also disclosed for use with a drill chuck, including for creating a "twist lock" connection.

21: 2020/06225. 22: 2020/10/07. 43: 2023/08/16
51: G06Q; H04W
71: HOVER DEVELOPER SERVICES, INC.
72: KUTALEK, DAVID LEWIS, LYON, BENJAMIN MORRIS, BENEDICT, MICHAEL SCOTT
33: US 31: 15/943,248 32: 2018-04-02
54: SYSTEM AND METHOD FOR WIRELESS TRANSACTIONS
00: -
A system and method for wireless transactions provides a software development kit (SDK) that provides accessibility to inherent communication capabilities within a wireless communication device.

The communication capabilities are normally not accessible to a software developer. However, the SDK provides an appropriate interface that permits a software developer to create application programs for a variety of transactions between the wireless communication device and a mobile network operator (MNO). In some transactions, the MNO may function as a financial service provider in which a user has an account with an associated monetary value. The SDK provides a simplified technique for executing a financial transaction, such as making a payment or transferring money by presenting easy-to-use menus that avoid the difficulty of memorizing transaction codes, user phone numbers, and the like.

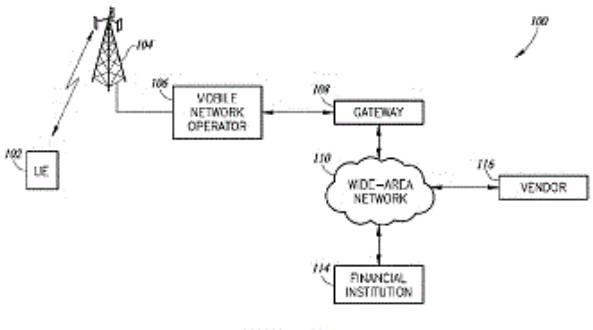

21: 2020/06397. 22: 2020/10/15. 43: 2023/08/23
51: G06T
71: MICROTEC S.R.L.
72: URSELLA, ENRICO, GIUDICEANDREA, FEDERICO
33: IT 31: 102019000019454 32: 2019-10-21
54: METHOD AND APPARATUS FOR PERFORMING A TOMOGRAPHIC EXAMINATION OF AN OBJECT
00: -
A method and a related apparatus for performing a tomographic examination of an object (2) which advances through an examination area (6), wherein the examination area (6) is irradiated with x-rays transversally to a motion trajectory of the object (2) and the residual intensity of the x-rays which have crossed the object (2) is repeatedly detected to obtain, for each detection, an electronic two-dimensional pixel map, the two-dimensional maps thus obtained being processed by a computer to obtain a three-dimensional tomographic reconstruction of the object (2); wherein, during the advancement, the object (2) is made or let rotate, at least partly uncontrolled, in such a way that the object (2) rotates around one or more rotation axes which are transversal both to the motion trajectory and to the propagation directions of the x-rays crossing it; and wherein a computer also determines the spatial position in which the object (2) is located relative to the one or more emitters (4) and/or the one or more detectors (5) at the instant when each two-dimensional map is detected, and factors this in the tomographic reconstruction.

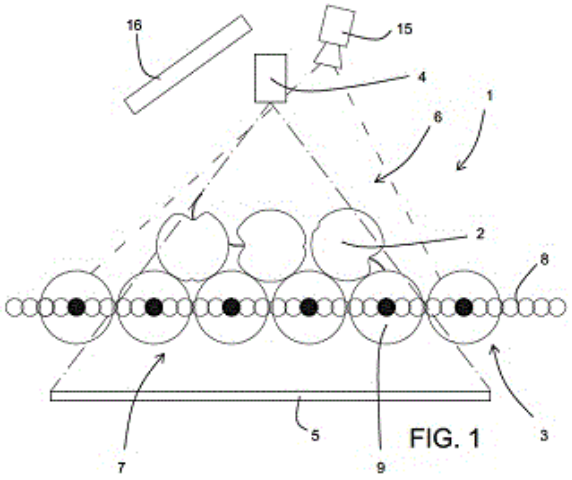

FIG. 1

21: 2020/06517. 22: 2020/10/20. 43: 2023/08/23
51: G10L
71: DOLBY INTERNATIONAL AB
72: KJOERLING, KRISTOFER, VILLEMOES, LARS, PURNHAGEN, HEIKO, EKSTRAND, PER
33: US 31: 62/662,296 32: 2018-04-25
54: INTEGRATION OF HIGH FREQUENCY RECONSTRUCTION TECHNIQUES WITH REDUCED POST-PROCESSING DELAY
00: -
A method for decoding an encoded audio bitstream is disclosed. The method includes receiving the encoded audio bitstream and decoding the audio data to generate a decoded lowband audio signal. The method further includes extracting high frequency reconstruction metadata and filtering the decoded lowband audio signal with an analysis filterbank to generate a filtered lowband audio signal. The method also includes extracting a flag indicating whether either spectral translation or harmonic transposition is to be performed on the audio data and regenerating a highband portion of the audio signal using the filtered lowband audio signal and the high frequency reconstruction metadata in

accordance with the flag. The high frequency regeneration is performed as a post-processing operation with a delay of 3010 samples per audio channel.

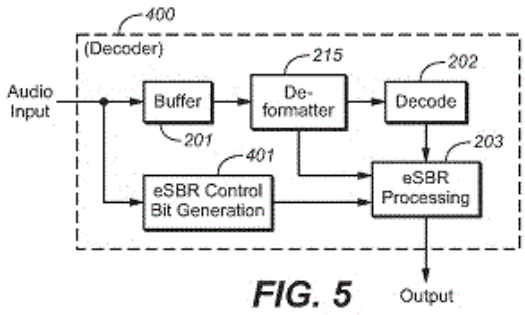

FIG. 5

21: 2020/06518. 22: 2020/10/20. 43: 2023/08/23
51: G10L
71: DOLBY INTERNATIONAL AB
72: KJOERLING, KRISTOFER, VILLEMOES, LARS, PURNHAGEN, HEIKO, EKSTRAND, PER
33: EP 31: 18169156.9 32: 2018-04-25

54: INTEGRATION OF HIGH FREQUENCY AUDIO RECONSTRUCTION TECHNIQUES

00: -

A method for decoding an encoded audio bitstream is disclosed. The method includes receiving the encoded audio bitstream and decoding the audio data to generate a decoded lowband audio signal. The method further includes extracting high frequency reconstruction metadata and filtering the decoded lowband audio signal with an analysis filterbank to generate a filtered lowband audio signal. The method also includes extracting a flag indicating whether either spectral translation or harmonic transposition is to be performed on the audio data and regenerating a highband portion of the audio signal using the filtered lowband audio signal and the high frequency reconstruction metadata in accordance with the flag. The high frequency regeneration is performed as a post-processing operation with a delay of 3010 samples per audio channel.

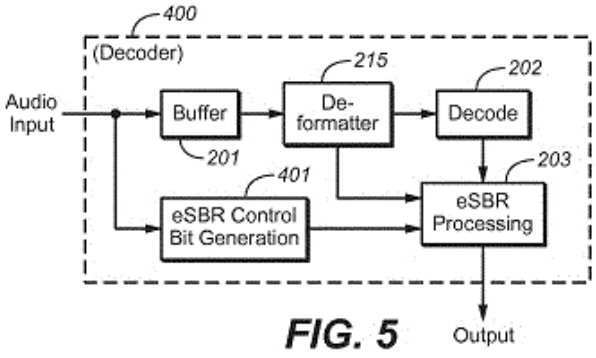

FIG. 5

21: 2020/06632. 22: 2020/10/23. 43: 2021/07/15
51: G02F; G09G
71: Jessica Tshabalala
72: Jessica Tshabalala

54: AN APPARATUS OPERABLE TO DISPLAY ONE OR MORE DIGITAL ARTWORK/S

00: -

According to a first aspect of the invention, there is provided an apparatus operable to display one or more moving artwork/s wherein said apparatus includes one or more of the following: 5 a liquid crystal display (LCD) or a light-emitting diode (LED) display screen; a control board; an operating system and/or firmware; a wireless networking module; a wireless remote control; and one or more databases, operable to store information. In an embodiment of the invention, said apparatus is operable to display said one or more moving artwork/s on either a wall, floor, ceiling,roof and/or any suitable surface, in use.

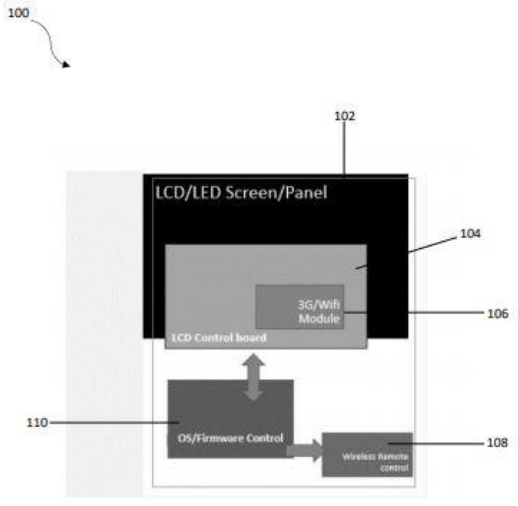

21: 2020/07418. 22: 2020/11/27. 43: 2023/08/11
51: A61K; A61Q

71: Colgate-Palmolive Company
72: CHEN, Xiang, CHOPRA, Suman
54: ORAL CARE COMPOSITION
00: -
An oral care composition, including a structurant including a carboxypolymethylene polymer, a humectant including glycerin, a whitening agent including hydrogen peroxide, and a carrier including water, wherein the oral care composition has a pH from about 4 to about 6, a transmission rate of at least 58 %, a refraction index of about 1.40 or less, and a transmission loss rate of 2 % or less at a surface interface due to refraction of light, for light in the wavelength of about 400 nm to about 420 nm.

21: 2020/07572. 22: 2020/12/04. 43: 2023/08/16
51: A61K; A61P; C07D
71: Pfizer Inc.
72: ASPNES, Gary Erik, BAGLEY, Scott W., CURTO, John M., EDMONDS, David James, FLANAGAN, Mark E., FUTATSUGI, Kentaro, GRIFFITH, David A., HUARD, Kim, LIAN, Yajing, LIMBERAKIS, Chris, LONDREGAN, Allyn T., MATHIOWETZ, Alan M., PIOTROWSKI, David W., RUGGERI, Roger B.
33: US 31: 62/684,696 32: 2018-06-13
54: GLP-1 RECEPTOR AGONISTS AND USES THEREOF
00: -
Provided herein are 6-carboxylic acids of benzimidazoles and 4-aza- 5-aza-, and 7-aza-benzimidazoles as GLP-1 R agonists, processes to make said compounds, and methods comprising administering said compounds to a mammal in need thereof (Formula I).

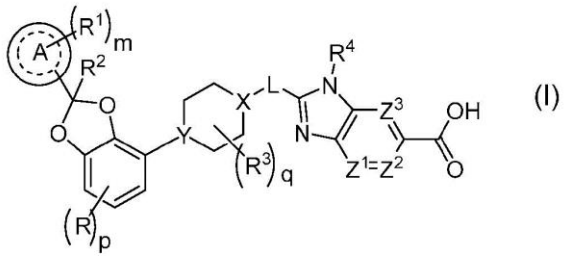

(I)

21: 2020/07714. 22: 2020/12/10. 43: 2023/08/16
51: G06N; G06Q
71: UNIVERSITY OF JOHANNESBURG
72: PAUL, DIPANJAN, TSHILIDZI, MARWALA, PAUL, SATYAKAMA
33: ZA 31: 2018/03463 32: 2018-05-25

54: SYSTEM AND METHOD FOR REAL TIME PREDICTION OF WATER LEVEL AND HAZARD LEVEL OF A DAM
00: -
The invention relates to a water level prediction system for a dam. The system includes a water level prediction module which is configured to (a) receive time series data, which relates to a water level of the dam, in real-time; and (b) predict, in real-time, a future water level of the dam by processing the received time series data in one or more predictive models/formula(s)/algorithm(s). The one or more predictive models/formula(s)/algorithm(s) may include a recurrent neural network (RNN) or RNN model/algorithm which is configured/trained to predict, in real-time, a future water level of the dam by using the received time series data in the RNN or RNN model/algorithm. The water level prediction module may also include at least one statistical model/algorithm which is configured/trained to predict, in real-time, a future water level of the dam by using the received time series data in the statistical model/algorithm.

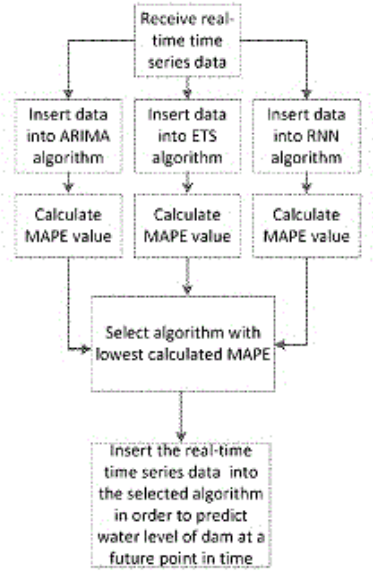

21: 2021/00014. 22: 2021/01/04. 43: 2023/08/16
51: H04N
71: VID SCALE, INC.
72: HE, YUWEN, XIU, XIAOYU, YE, YAN, HANHART, PHILIPPE
33: US 31: 62/734,728 32: 2018-09-21
33: US 31: 62/778,055 32: 2018-12-11
33: US 31: 62/691,770 32: 2018-06-29

54: ADAPTIVE CONTROL POINT SELECTION FOR AFFINE MOTION MODEL BASED VIDEO CODING

00: -

Systems, methods, and instrumentalities are disclosed for motion vector clipping when affine motion mode is enabled for a video block. A video coding device may determine that an affine mode for a video block is enabled. The video coding device may determine a plurality of control point affine motion vectors associated with the video block. The video coding device may store the plurality of clipped control point affine motion vectors for motion vector prediction of a neighboring control point affine motion vector. The video coding device may derive a sub-block motion vector associated with a sub-block of the video block, clip the derived sub-block motion vector, and store it for spatial motion vector prediction or temporal motion vector prediction. For example, the video coding device may clip the derived sub-block motion vector based on a motion field range that may be based on a bit depth value.

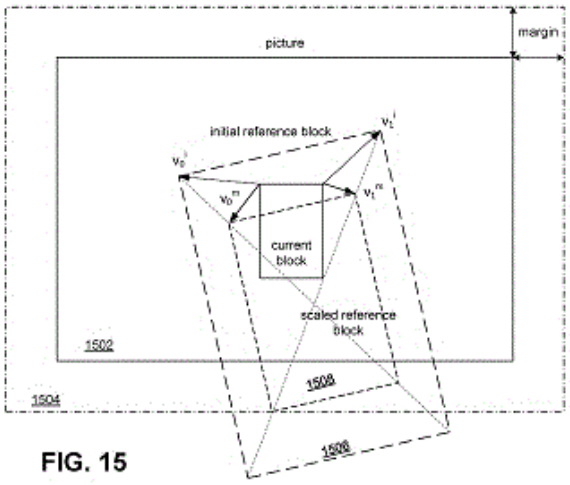

FIG. 15

21: 2021/00028. 22: 2021/01/04. 43: 2023/08/16
51: G09F; B42D
71: INVALUABLE INVENTIONS
72: ESMAIL, KEMAAL

54: IMPROVED SELF-DESTRUCTIVE DOCUMENTS FOR INFORMATION SECURITY AND PRIVACY PROTECTION

00: -

The inventor herein discloses destructive (self-destructing) documents useful for the protection of confidential information. The invention comprises a document which can be easily and instantly broken down into dozens of individual components, hence obliterating any information contained thereon. As the self-destruction of the document requires no extraneous equipment for destruction and guarantees elimination of readable data, the invention represents a vast improvement over the state of the art. Further refinements allow simple mass production of the invention using current manufacturing equipment and technologies. Numerous embodiments of the document of the invention specialized for different applications are illustrated and described.

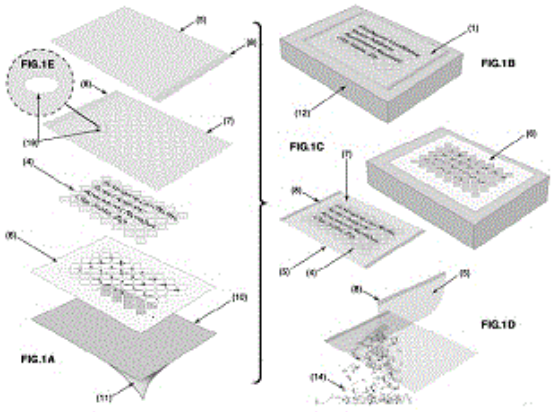

21: 2021/00079. 22: 2021/01/05. 43: 2023/08/16
51: G21F; G01T
71: BWXT ISOTOPE TECHNOLOGY GROUP, INC.
72: FEWOX, CHRISTOPHER SEAN, WIGGINS, BRYAN BLAKE, PREITE, STEPHEN D, BARGER, EARL BRIAN
33: US 31: 16/445,305 32: 2019-06-19
33: US 31: 62/687,612 32: 2018-06-20

54: SYSTEM AND METHOD FOR EVALUATING ELUTION EFFICIENCY AND RADIOPURITY OF TC-99M GENERATORS

00: -

A system for analyzing radiochemical purity of an eluate produced from a generator is provided. The system has an elution detector made of a shielding metal. The elution detector houses a flow path template for flow of an eluate solution and an elutable isotope contained in the generator, and a monitoring device for simultaneously monitoring the generator and the eluate exiting the generator. The generator is a Technetium-99m (Tc-99m) generator, and the elutable isotope may be contained in a

packed bed of a column in the Tc-99m generator. A method for analyzing radiochemical purity of eluate produced from a Technetium-99m (Tc-99m) generator or column is also provided.

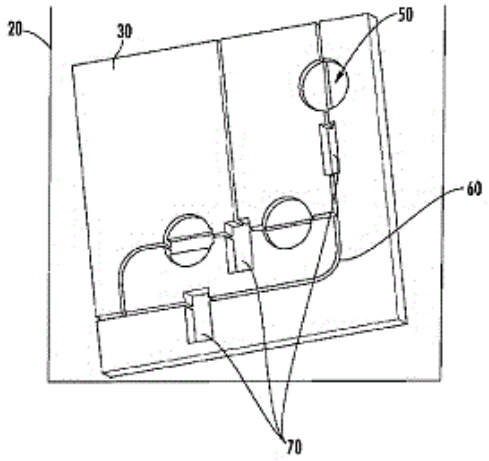

21: 2021/00167. 22: 2021/01/11. 43: 2023/08/16
51: C07C; B01J
71: HALDOR TOPSØE A/S
72: PEDERSEN, LARS STORM, LARSEN, MORTEN BOBERG, MORTENSEN, PETER MØLGAARD
33: DK 31: PA 2018 00393 32: 2018-07-16
54: THERMOLYTIC FRAGMENTATION OF SUGARS USING RESISTANCE HEATING
00: -
A process for large scale and energy efficient production of oxygenates from sugar is disclosed in which a sugar feedstock is introduced into a thermolytic fragmentation reactor comprising a fluidized stream of heat carrying particles which are separated from the reaction product and directed to a reheater comprising a resistance heating system.

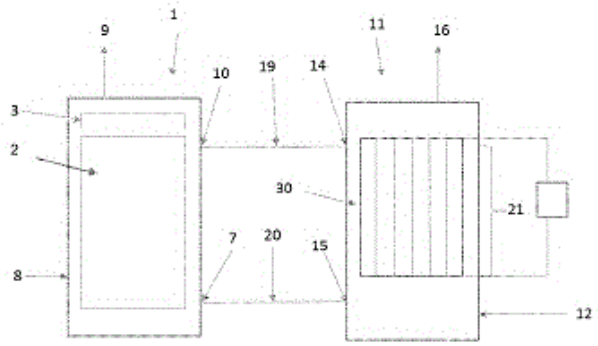

21: 2021/00390. 22: 2021/01/19. 43: 2023/08/16
51: A61K; C07K
71: PRECIGEN, INC.
72: SABZEVARI, HELEN, METENOU, SIMON, CHEN, CHANGHUNG, SHAH, RUTUL R
33: US 31: 62/695,623 32: 2018-07-09
33: US 31: 62/863,710 32: 2019-06-19
33: US 31: 62/866,420 32: 2019-06-25
33: US 31: 62/864,367 32: 2019-06-20
33: US 31: 62/695,627 32: 2018-07-09
54: FUSION CONSTRUCTS AND METHODS OF USING THEREOF
00: -
Provided herein is a composition comprising a fusion protein or a fragment or a variant thereof comprising an anti-PD1 antibody or a fragment/variant thereof and a TGF- trap. Provided herein is a composition comprising a fusion protein or a fragment thereof or a variant thereof comprising an anti-PD1 antibody or a fragment/variant thereof and a ADA2 polypeptide. Also provided herein are methods of using the composition in treating cancer.

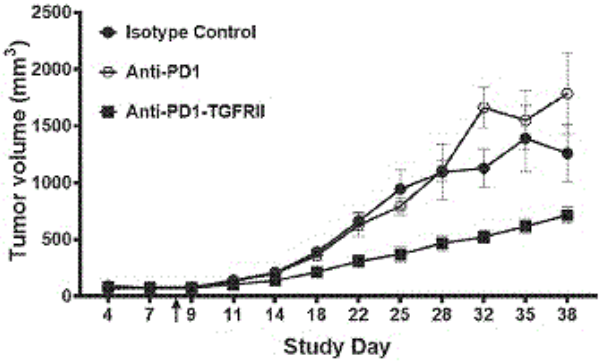

21: 2021/00427. 22: 2021/01/20. 43: 2023/08/16
51: A61M; A61B; A62B
71: VYAIRE MEDICAL, INC.
72: VARGA, CHRISTOPHER M, WHITE, DENNIS, REDFORD, RYAN G, DILLINGHAM, THOMAS
33: US 31: 62/773,820 32: 2018-11-30
33: US 31: 62/712,933 32: 2018-07-31
54: VENTILATION MASK
00: -
Ventilation masks are described herein. A ventilation mask includes a mask body and a gas manifold. The mask body defines a patient cavity and further includes a patient opening in fluid communication with the patient cavity; and at least one vent opening formed through the mask body, the at least one vent opening in fluid communication with the patient cavity, wherein the at least one vent opening is

disposed generally opposite to the patient opening. The gas manifold is coupled to the mask body. The gas manifold can define a gas channel. The gas manifold can include a plurality of vectored gas ports in fluid communication with the gas channel, wherein the plurality of vectored gas ports are configured to create a curtain effect gas flow within the patient cavity to form a gas curtain within the patient cavity and adjacent to the at least one vent opening.

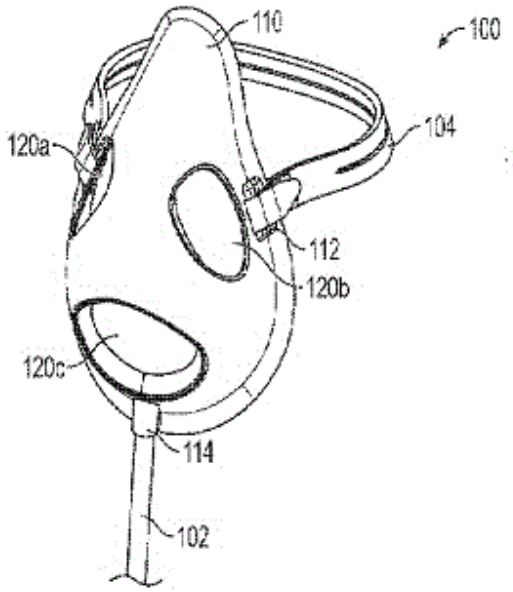

21: 2021/00486. 22: 2021/01/22. 43: 2023/08/16
51: C07D; A01N
71: FMC CORPORATION
72: ZHANG, WENMING
33: US 31: 62/698,035 32: 2018-07-14
33: US 31: 62/778,992 32: 2018-12-13
54: PESTICIDAL MIXTURES COMPRISING INDAZOLES
00: -
Disclosed are Compound 1 and compounds of Formula 2, Also disclosed are compositions containing Compound 1 or compounds of Formula 2, or combinations thereof and methods for controlling an invertebrate pest comprising contacting the invertebrate pest or its environment with a biologically effective amount of a compound or a composition of the invention.

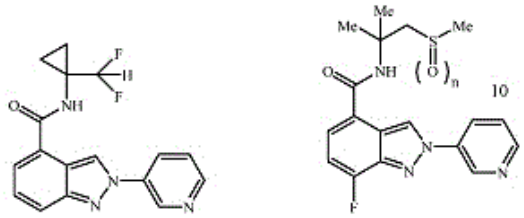

21: 2021/00571. 22: 2021/01/26. 43: 2023/08/18
51: C07D; A01N
71: FMC CORPORATION
72: XU, MING, DEANGELIS, ANDREW JON, LAHM, GEORGE PHILIP
33: US 31: 62/699,880 32: 2018-07-18
54: ISOXAZOLINE COMPOUNDS FOR CONTROLLING INVERTEBRATE PESTS
00: -
Disclosed are Compounds of Formula (1) or (1'), wherein Q is (Q-1) or (Q-2); and R^1, R^2, R^3, J and X are as defined in the disclosure. Also disclosed are compositions containing the Compounds of Formula (1) or Formula (1') and methods for controlling an invertebrate pest comprising contacting the invertebrate pest or its environment with a biologically effective amount of a Compound or a composition of the invention.

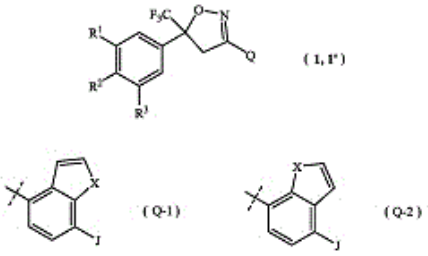

21: 2021/00593. 22: 2021/01/27. 43: 2023/08/16
51: A61K; A61P; C07D
71: Xenon Pharmaceuticals Inc.
72: FOCKEN, Thilo, ANDREZ, Jean-Christophe, BURFORD, Kristen Nicole, DEHNHARDT, Christoph Martin, GRIMWOOD, Michael Edward, JIA, Qi, LOFSTRAND, Verner Alexander, WILSON, Michael Scott, ZENOVA, Alla Yurevna, WESOLOWSKI, Steven Sigmund, SUN, Shaoyi
33: US 31: 62/725,956 32: 2018-08-31
54: HETEROARYL-SUBSTITUTED SULFONAMIDE COMPOUNDS AND THEIR USE AS THERAPEUTIC AGENTS
00: -

This invention is directed to pyridine- and thiophene-sulfonamide compounds, as stereoisomers, enantiomers, tautomers thereof or mixtures thereof; or pharmaceutically acceptable salts, solvates or prodrugs thereof, for the treatment of diseases or conditions associated with voltage-gated sodium channels, such as epilepsy and/ or epileptic seizure disorders.

21: 2021/00594. 22: 2021/01/27. 43: 2023/08/23
51: A61K; A61Q
71: Colgate-Palmolive Company
72: WU, Qiang, CHENG, Shujiang, NWOSISI, Juliana, DU-THUMM, Laurence
54: SOLID CLEANSING COMPOSITIONS AND METHODS FOR THE SAME
00: -
Solid cleansing compositions and methods for the same are disclosed herein. The solid cleansing compositions may include a soap, a plant oil, and a hydrolyzed protein. The plant oil and the hydrolyzed protein may be present in an effective amount to maintain or increase hydration of skin. The plant oil may be or include a flaxseed oil, and the hydrolyzed protein may be or include a hydrolyzed milk protein.

21: 2021/00602. 22: 2021/01/27. 43: 2023/08/18
51: C07C
71: HALDOR TOPSØE A/S
72: TJÄRNEHOV, EMIL ANDREAS, DAHL, PER JUUL
33: DK 31: PA 2018 00475 32: 2018-08-17
54: A METHOD FOR PRODUCING METHANOL IN A REACTOR WITH BYPASS
00: -
A method for producing methanol comprises the steps of passing a feed stream of methanol synthesis gas through a main methanol reactor containing a methanol synthesis catalyst, to form a mixed gas containing methanol, cooling the mixed gas containing methanol, separating methanol from the mixed gas and heating the mixed gas. The stream of heated mixed gas is passed through an additional methanol reactor containing a methanol synthesis catalyst, and the effluent from the additional methanol reactor is mixed with the feed stream of methanol synthesis gas and passed through the main methanol reactor.

21: 2021/00618. 22: 2021/01/28. 43: 2023/08/18
51: C03B
71: OWENS-BROCKWAY GLASS CONTAINER INC.
72: FAYERWEATHER, CARL L, GAERKE, DALE A, ROTH, ROBERT
33: US 31: 15/879,233 32: 2018-01-24
54: SYSTEM FOR PREHEATING GLASS MELTING FURNACE BATCH MATERIALS
00: -
A system for preheating batch materials prior to delivery to a glass melting furnace. The system comprises a preheater configured to receive unheated batch materials and to deliver heated batch materials. The preheater includes a primary outlet configured to exhaust fluid from the preheater and a primary inlet configured to receive exhaust fluids from the glass melting furnace and exhaust fluids recirculated from the primary outlet of the preheater. The system further includes a first valve configured to control a first amount of exhaust fluid from the preheater delivered to a flue for combination with exhaust fluid from the glass melting furnace, and a second valve configured to control a second amount of exhaust fluid from the preheater recirculated to the inlet of the preheater. The system also includes a first temperature sensor configured to generate a first temperature signal indicative of a first temperature of fluids within a first duct coupled to the inlet of the preheater. In addition, the system further includes an inlet temperature controller configured to control the first valve and the second valve responsive to the first temperature.

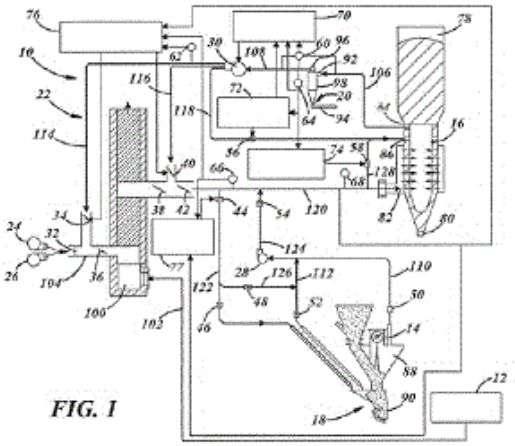

FIG. 1

21: 2021/00676. 22: 2021/01/29. 43: 2023/08/23
51: A61K; A61P; C07K
71: Innovent Biologics (Suzhou) Co., Ltd.
72: SHI, Xinzhen, ZHANG, Pan, LIU, Junjian
33: CN 31: 201810823583.6 32: 2018-07-25
54: ANTI-TIGIT ANTIBODY AND USES THEREOF
00: -
A novel antibody and antibody fragment that specifically bind to TIGIT, and a composition comprising the antibody or the antibody fragment. A nucleic acid encoding the antibody or the antibody fragment thereof, a host cell containing same, and related uses, comprising therapeutic and diagnostic uses of the antibody and the antibody fragment.

21: 2021/00682. 22: 2021/01/29. 43: 2023/08/18
51: G06F
71: JONES, MARIA FRANCISCA
72: JONES, MARIA FRANCISCA
33: GB 31: 1805269.6 32: 2018-03-29
54: DEVICE OPERATION CONTROL
00: -
A device comprises a memory to store motion type control data comprising a display to display information in a plurality of independent display regions, each display region being independently identifiable; identifications of motion types and corresponding operations to be performed on information displayed in one or more identified display regions; a motion detecting arrangement to detect motion of the device; a user input arrangement to receive a user input identifying operations to be performed on information displayed in one or more identified display regions during a learning phase; and a processor programmed, in the learning phase when a user input is received identifying an operation to be performed on information displayed in one or more identified display regions, to identify a motion type from motion detected by the motion detecting arrangement and to store the received user input in correspondence with data identifying the motion type in the motion type control data, and, subsequent to the learning phase when the motion detecting arrangement detects motion, to use the motion type control data to identify a motion type and execute the corresponding operation on information displayed in one or more identified display regions.

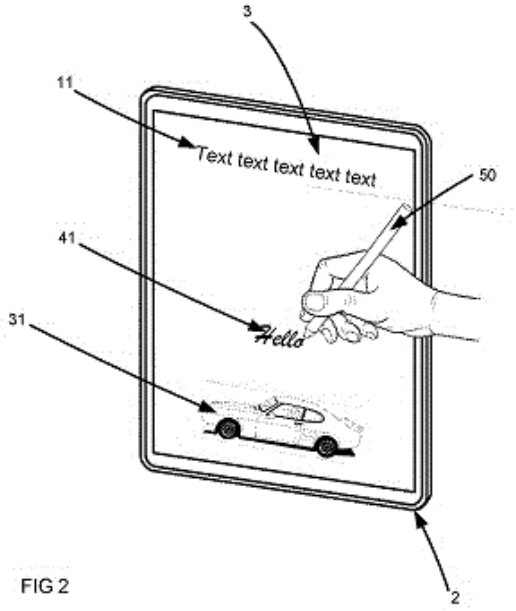

FIG 2

21: 2021/00844. 22: 2021/02/08. 43: 2023/09/18
51: A47F; G07F
71: FREETAIL ACQUISITION LLC.
72: LEVIN Arye
33: IL 31: 260455 32: 2018-07-08
54: CART LOCKING AND DISPENSING DEVICE
00: -
A device for dispensing and locking carts disposed in a stack, comprising: a dual-lever mechanism, comprising: a locking lever which is blocking movement of a first cart of a plurality of carts disposed in a stack when in open position; a base adjacent to said locking lever which is movable forward and backward with respect to the stack; and a dispensing lever mounted on the base which is blocking movement of a second cart of the plurality of carts when in open position; and a drive belt

driving the plurality of carts in parallel to movement of said base by moving forward and backward in coordination with the base.

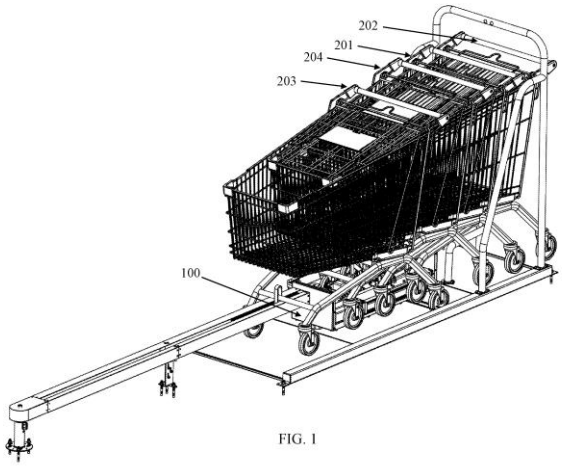

FIG. 1

21: 2021/00888. 22: 2021/02/09. 43: 2023/08/22
51: C12M; A61L
71: VERIGRAFT AB
72: STREHL, RAIMUND
33: US 31: 62/714,200 32: 2018-08-03
54: METHODS OF PREPARING PERSONALIZED BLOOD VESSELS
00: -
The present disclosure relates to methods of preparing personalized blood vessels, useful for transplantation with improved host compatibility and reduced susceptibility to thrombosis. Also provided are personalized blood vessels produced by the methods and use thereof in surgery.

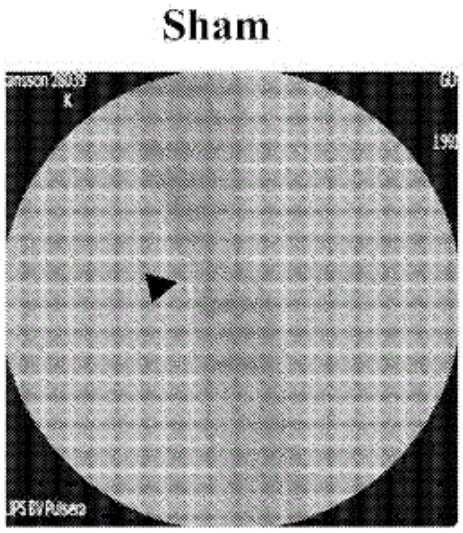

21: 2021/00928. 22: 2021/02/10. 43: 2023/08/17
51: G06Q
71: PEDAWI, SARWAR
72: PEDAWI, SARWAR
33: US 31: 16/055,775 32: 2018-08-06
54: GLOBAL ADDRESS SYSTEM AND METHOD
00: -
This disclosure relates to a system, method, and computer-readable device configured to receive demographic and geographical information and create a unique global address therefrom. For example, the system comprises at least one processor configured to receive account information describing the remote user and global location data describing a remote location, validate the received information and data, determine navigational data, create a location code, and send the location code to a remote device.

21: 2021/00952. 22: 2021/02/11. 43: 2023/08/22
51: A61K; A61P; C07K; C12N
71: HEXAMER THERAPEUTICS, INC.
72: MILLER, KEITH DOUGLAS
33: US 31: 62/697,132 32: 2018-07-12
54: SELF-ASSEMBLING PEPTIDE SCAFFOLD
00: -
The present disclosure describes a peptide scaffold for producing vaccines. The peptide scaffold includes a peptide that self-assembles into a hapten carrier (hC) includes amphipathic alpha- helices. The peptide includes heptad repeats following a specific pattern. The hC further includes hapten or an agent conjugated to it, and optionally the hC includes one

or more T-cell epitopes at the N- and/or C-terminus of the one or more amphipathic alpha-helices. The present disclosure also describes compositions including immunogenic compositions including the hapten-hC or agent-hC conjugate.

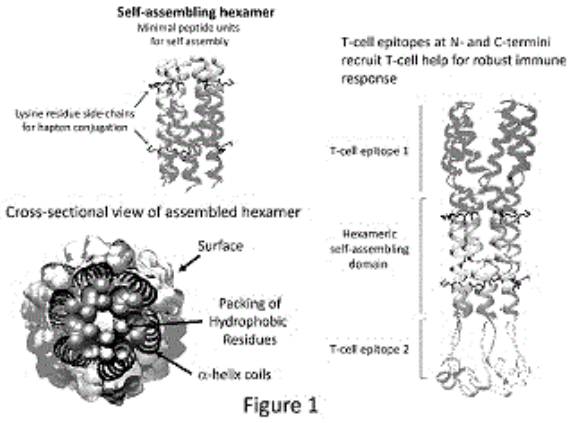

Figure 1

21: 2021/00955. 22: 2021/02/11. 43: 2023/08/22
51: A61P; C07D; A61K; C07H
71: VERSEON INTERNATIONAL CORPORATION
72: SHORT, KEVIN MICHAEL, ESTIARTE-MARTINEZ, MARIA DE LOS ANGELES, KITA, DAVID BEN, SIRISOMA, NILANTHA SUDATH
33: US 31: 62/697,817 32: 2018-07-13
54: THROMBIN INHIBITORS, FORMULATIONS, AND USES THEREOF
00: -
Thrombin-inhibiting acylated pyrazole-pyridone compounds of formula (II) are disclosed herein, as well as pharmaceutical compositions, including tablets, that contain acylated pyrazole- pyridone compounds. These compounds are useful for the treatment and prevention of thrombin-related related diseases and disorders. Processes for making tablets containing acylated pyrazole-pyridones are also included.

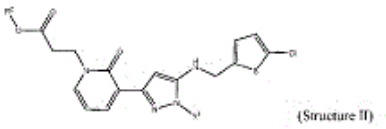
(Structure II)

Fig. 1

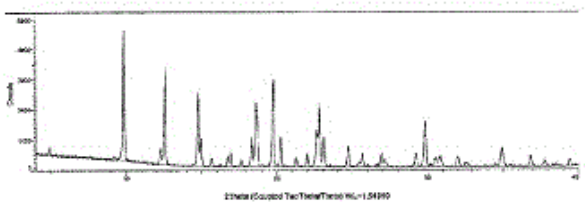

21: 2021/00958. 22: 2021/02/11. 43: 2023/08/22
51: B02C
71: METSO OUTOTEC FINLAND OY
72: MALKAMÄKI, MIKKO, TEERI, TUOMAS
33: EP 31: 18191728.7 32: 2018-08-30
54: A CRUSHER MANTLE LIFTING DEVICE, AN ARRANGEMENT AND A METHOD
00: -
The present invention relates to a crusher mantle lifting device. Attachment elements are configured to be attachable to a crusher mantle. Each attachment element comprises a main portion having an inner surface facing the mantle and an outer surface. A locking portion projects from the inner surface and is configured to protrude into a corresponding opening in the mantle. One or more lifting portions project from the outer surface. A tightening means is configured to press the attachment elements towards the crusher mantle. The invention also relates to an arrangement and a method.

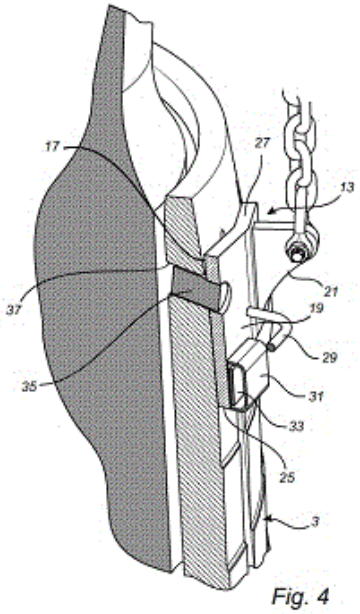

Fig. 4

21: 2021/00996. 22: 2021/02/12. 43: 2023/08/22
51: A21B; B65D
71: INASTIR HOLDINGS, LLC
72: MURPHY, MICHAEL
33: US 31: 62/713,294 32: 2018-08-01
54: TEAR-OFF BAKING CONTAINER
00: -
A baking container having one or more rupture lines for ease of removal and separation from a baked foodstuff is described herein. The baking container has a sidewall and a planar bottom face. One or more rupture lines may run down a height of the sidewall and across a portion or all of the planar bottom face. Rupture lines having even spacing may form a strip, and the strip may have a pull tab to easily tear through the sidewall. The strip may be reinforced with a string or ribbon. The rupture lines may be formed by perforating or weakening areas of the baking container.

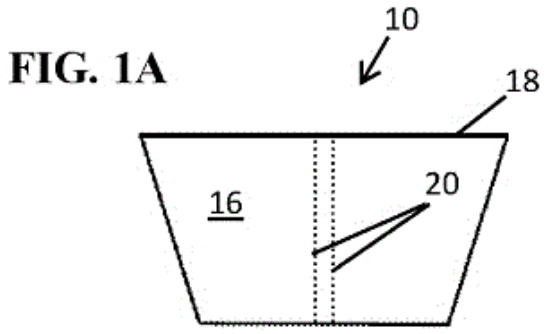

21: 2021/01023. 22: 2021/02/15. 43: 2023/08/22
51: A61K; C08G; C09J
71: MEDHERANT LTD
72: HADDLETON, DAVID, NURUMBETOV, GABIT, ROSS, ANDREW, NIKOLAOU, VASILIKI
33: GB 31: 1811834.9 32: 2018-07-19
54: PATCH
00: -
The invention relates to novel compositions comprising urea and amine functionalised silyl containing polymers which, in combination with tackifying resins, are used as pressure sensitive adhesives and specifically, drug delivery patches. Said compositions can be synthesised with less difficulty compared to urethane analogues and are compatible with a wide array of different drugs.

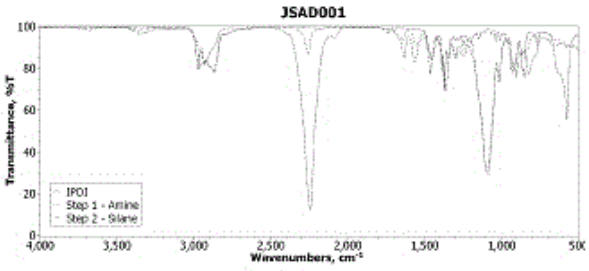

21: 2021/01041. 22: 2021/02/16. 43: 2023/08/22
51: F28D
71: STORENERGY HOLDINGS LTD
72: VUKSANOVIC, MARKO
33: GB 31: 1617703.2 32: 2016-10-19
54: SOLAR CONCENTRATOR, SOLAR RECEIVER AND THERMAL STORAGE
00: -
A thermal energy storage system including: a container which comprises at least a first inlet, a second inlet and a third inlet for admitting fluid into the container and at least a first outlet and a second outlet for admitting fluid out of the container; and a solid thermal storage mass contained within the container. Each of the outlets and inlets is located at a height relative to gravity in use, such that the height of the first inlet is greater than the height of the second inlet, the height of the second inlet is greater than the height of the first outlet. The solid thermal storage mass comprises a plurality of openings such that the fluid can pass at least between the first inlet and the first outlet, between the second inlet and the first outlet, and between the third inlet and the second outlet by passing through the openings.

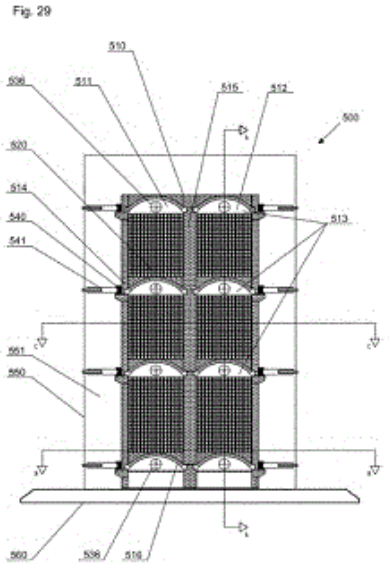

21: 2021/01058. 22: 2021/02/16. 43: 2023/08/22
51: C03C; C09D; C08K
71: ARKEMA FRANCE
72: BIRKEN, ISABELLE, HOEKMAN, LEENDERT
33: FR 31: 1874020 32: 2018-12-21
54: SCRATCH MASKING COATING SOLUTION FOR GLASS CONTAINERS
00: -
The present invention relates to formulations for improving glass surface appearance, particularly the external surfaces of glass containers. More particularly, the present invention relates to a scratch masking coating solutions for glass bottles, which enhances appearance.

21: 2021/01099. 22: 2021/02/17. 43: 2023/08/22
51: F16B; A47B
71: VÄLINGE INNOVATION AB
72: SVENSSON, JOHAN, DERELÖV, PETER
33: SE 31: 1851028-9 32: 2018-08-30
54: SET OF PANELS WITH A MECHANICAL LOCKING DEVICE
00: -
A set including a first panel (10), a second panel (20) and a mechanical locking device for locking the first panel (10) to the second panel (20), wherein the first panel (10) includes a first edge surface (11), the second panel (20) includes a second panel surface (22), the mechanical locking device includes at least one rod-shaped element (31) that extends at a first angle (α1) from the first edge surface (11), an insertion groove (32) extends into the second panel surface (22) at a second angle (α2) from the second panel surface (22), the mechanical locking device further includes at least one locking groove (35) and at least one locking part (34), wherein the locking groove (35) includes at least one locking surface (37) extending at a third angle (β) from the first edge surface (11) or from the second panel surface (22), the locking part (34) is configured to be inserted into the locking groove (35) and lock against the locking surface (37), and the third angle (β) is different than the first angle (α1).

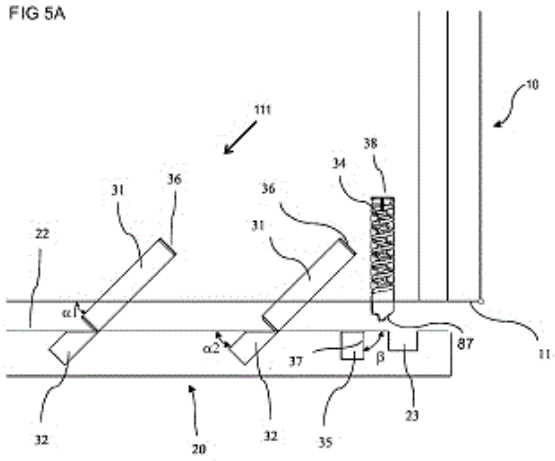

21: 2021/01180. 22: 2021/02/22. 43: 2023/08/25
51: C25B; C07C
71: HALDOR TOPSØE A/S
72: TJÄRNEHOV, EMIL ANDREAS, PEDERSEN, LARS STORM, HULTQVIST, MICHAEL, ESKESEN, SØREN GRØNBORG, JENSEN, LOUISE WISSING
33: DK 31: PA 2018 00573 32: 2018-09-13
54: PROCESS FOR THE PREPARATION OF METHANOL
00: -
Process for the preparation of a methanol product comprising the steps of a) providing a first process stream consisting essentially of carbon dioxide; b) providing a second process stream consisting of hydrogen by electrolyzing water in an electrolysis unit; c) mixing the first and second process in amount to obtain a methanol synthesis gas with a mole ratio of H2 and CO2 of between 2.5 and 3.5; d) catalytic converting the methanol synthesis gas into raw methanol in at least one methanol reactor; e) purifying the raw methanol in a distillation unit; and recovering waste heat generated in the electrolysis unit in step (b) by transferring the waste heat to a

circulating heat transfer medium by indirect heat exchange with the waste heat and by indirect heat exchange of the heated heat transfer medium with steam used for the distillation of the raw methanol, wherein the heated transfer medium is compressed upstream the indirect heat exchange with steam.

21: 2021/01186. 22: 2021/02/22. 43: 2023/08/22
51: A01N
71: UPL LTD
72: JADHAV, Prakash, Mahadev, CANDELMO, Jody, SHROFF, Jaidev, Rajnikant, SHROFF, Vikram, Rajnikant
33: IN 31: 201831028167 32: 2018-07-26
54: A STABLE LIQUID AGROCHEMICAL FORMULATION
00: -
The present invention relates to a stable liquid agrochemical formulation in the form of an oil dispersion comprising neonicotinoid compounds and pyrethroid compounds that is stable at low temperatures.

21: 2021/01233. 22: 2021/02/24. 43: 2023/08/25
51: B07B; F16B
71: METSO SWEDEN AB
72: PERSSON, MATHIAS, LUNDBERG, PETER
33: EP 31: 16189247.6 32: 2016-09-16
33: EP 31: 17172104.6 32: 2017-05-20
54: A LINING ARRANGEMENT, AND A METHOD FOR FASTENING LINING ELEMENTS TO A SUPPORT STRUCTURE
00: -
The disclosure relates to a lining arrangement (3) for wear protection comprising: at least one lining element (1, 1´) arranged to be fastened to a support structure (2); and at least one device, the device comprising: a first element (4; 4´) adapted to be received in a through hole (8) of said at least one lining element (1, 1´) or a through hole (8) created by adjacent lining elements (1, 1´), the first element (4; 4´) having an axially arranged opening (41); a second element (5, 5´) for engagement with the first element (4, 4´), such that the at least one lining element (1, 1´) is attached to the support structure (2) upon interconnection between the first element (4, 4´) and the second element (5, 5´), and wherein an outer periphery of the second element (5, 5´) comprises a plurality of grooves (9) for engagement with a handling tool (10). The disclosure further relates to a method for fastening lining elements (1, 1´) to a support structure (2).

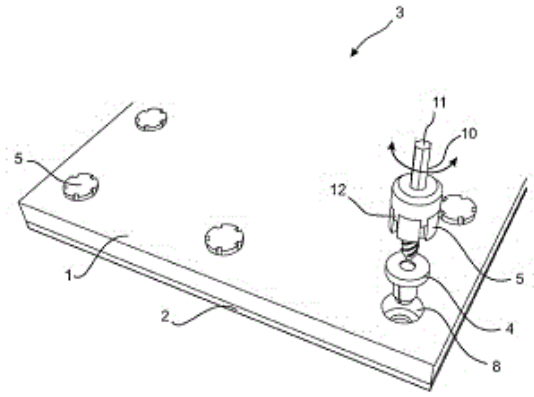

21: 2021/01358. 22: 2021/02/26. 43: 2023/08/18
51: A61K; A61P; C07K
71: Invectys SA
72: LOUSTAU, Maria, ANNA, François, LANGLADE DEMOYEN, Pierre, CAUMARTIN, Julien
33: EP(FR) 31: 18306153.0 32: 2018-08-31
54: CHIMERIC ANTIGEN RECEPTORS AGAINST MULTIPLE HLA-G ISOFORMS
00: -
The present invention relates to chimeric antigen receptors (CAR) against multiple but not all human leukocyte antigen (HLA-G) isoforms. More specifically, the invention concerns CARs that are specific for HLA-G ß2M-free or ß2M-associated immunosuppressive isoforms respectively.

21: 2021/01374. 22: 2021/02/26. 43: 2023/08/25
51: E04G; F16B
71: WORXSAFE AB, VERTEMAX GROUP LTD
72: HOLMBOM, PATRICK, JÖNSSON, BENGT, TAYLOR, GARY
33: EP 31: 18192903.5 32: 2018-09-06
54: A TELESCOPIC EDGE PROTECTION POST
00: -
The invention relates to a telescopic edge protection post (1) arrangeable between a floor and a ceiling, the telescopic edge protection post comprising an outer tube (2) comprising a bottom end (3) and a top end (6), an inner tube (4) comprising a bottom end (5) and a top end (8), the inner tube extending into the outer tube and being movable with respect thereto between an extended position and a collapsed position. The edge protection post further comprises a locking mechanism (10) arranged to lock the inner tube with respect to the outer tube in

the extended position, and a tensioning unit (20) arranged at the top end of the inner tube, the tensioning unit comprising a tensioning element having a primary tensioning portion and a secondary tensioning portion, wherein tensioning of the secondary tensioning portion requires a lower force than tensioning of the primary tensioning portion, allowing tensioning of the secondary tensioning portion by means of extending the telescopic edge protection post by hand into engagement with the floor and the ceiling. Further, the primary and secondary tensioning portions each comprises a compression spring. There is thus provided an edge protection post which is both easy and safe to mount.

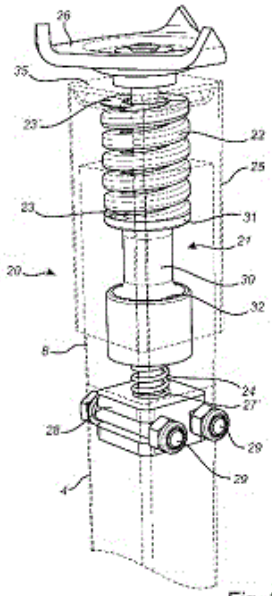

Fig. 2a

21: 2021/01409. 22: 2021/03/01. 43: 2023/08/25
51: C21C; C22B; C22C; F27B
71: OUTOKUMPU OYJ
72: VALLO, KIMMO, LINJA, PETTERI
33: FI 31: 20185805 32: 2018-09-26
54: A METHOD FOR UTILIZING METAL OXIDE CONTAINING SIDE STREAMS IN FERROCHROME SMELTING PROCESSES
00: -
The invention is directed to briquetting metal oxide dusts and fine material with cement-based binders. After this the briquettes can be fed into arc furnaces for ferrochrome production through already existing inlet systems.

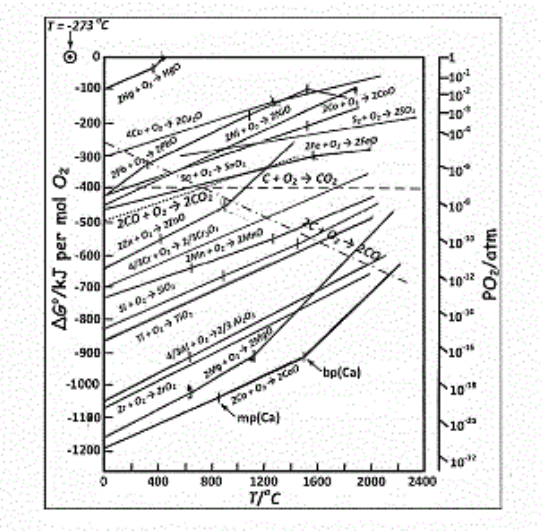

21: 2021/01539. 22: 2021/03/05. 43: 2023/08/25
51: B65G
71: RUGGLI PROJECTS AG
72: SCHULER, SAMUEL, ZUDDAS, ANTONELLO
33: CH 31: 00713/18 32: 2018-06-05
54: CONVEYING APPARATUS AND METHOD OF CONVEYING TAMPON APPLICATORS
00: -
The present invention relates to a conveying device for tampon applicators 100, comprising a first conveyor belt 2 which has two spaced-apart transport belts 3.1, 3.2. The transport belts each have a bearing shaft L1, L2. The conveying device according to the invention further has a first conveyor drive 4 for driving at least one of the two spaced-apart transport belts 3.1, 3.2, and transport belts which are spaced-apart from each other in such a way that a tampon applicator 100 to be conveyed rests in a gap D between the transport belts and on both transport belts. The bearing shafts L1, L2 of the transport belts 3.1, 3.2 are arranged in parallel, especially in the case of transport belts having the same direction of conveyance F. The present invention further relates to a method for conveying tampon applicators.

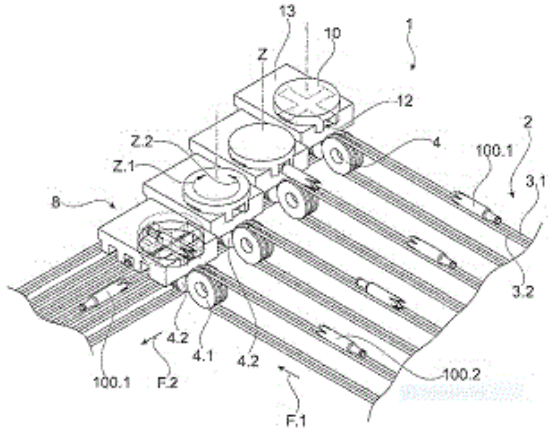

21: 2021/01565. 22: 2021/03/08. 43: 2023/08/25
51: H01M; C08F
71: GELION TECHNOLOGIES PTY LTD
72: MASCHMEYER, THOMAS, COAD, NATHAN, ELLIS, THOMAS, ZHAO, SHUFENG, HAWKETT, BRIAN STANLEY, NGUYEN, DUC NGOC, HUYNH, THE VIEN
33: AU 31: 2018903432 32: 2018-09-12
54: BATTERY WITH HALOGEN SEQUESTERING AGENT
00: -
The present specification relates to a battery, comprising an anode, a cathode, an electrolyte disposed between the anode and the cathode, a halogen in contact with the cathode, and a metal in contact with the anode, wherein the halogen is in contact with a polymeric halogen sequestering agent (HSA) which is a polymer comprising a moiety capable of sequestering the halogen.

21: 2021/01805. 22: 2021/03/17. 43: 2023/08/23
51: A61K; A61Q
71: Colgate-Palmolive Company
72: DONG, Rong, WANG, Wei, PIMENTA, Paloma, SANTARPIA III, Ralph Peter, PILCH, Shira
54: ORAL CARE COMPOSITIONS AND METHODS FOR THE SAME
00: -
A film forming composition and methods for preventing acid erosion of teeth and preventing the formation of caries on teeth are disclosed. The film forming composition may include a hydrophobic copolymer, a fluoride compound, and an orally acceptable solvent. The film forming composition may also include a cellulose derivative, a rosin, a fluoride compound, and an orally acceptable solvent.

21: 2021/01850. 22: 2021/03/18. 43: 2023/08/25
51: C07C
71: DOW GLOBAL TECHNOLOGIES LLC
72: NIESKENS, DAVY L.S, POLLEFEYT, GLENN, MALEK, ANDRZEJ
33: US 31: 62/732,622 32: 2018-09-18
54: PROCESS FOR PREPARING C2-C5 HYDROCARBONS USING A HYBRID CATALYST
00: -
A process for preparing $C_2$to C_5hydrocarbons includes introducing a feed stream into a reaction zone of a reactor, the feed stream including hydrogen gas and carbon monoxide. An additional stream is introduced into the reaction zone of the reactor, the additional stream comprising water, carbon dioxide, or mixtures thereof. A combined stream that includes the feed stream and the additional stream is converted into a product stream comprising $C_2$to C_5hydrocarbons in the reaction zone in the presence of a hybrid catalyst. The hybrid catalyst includes a metal oxide catalyst component, and a microporous catalyst component.

21: 2021/01869. 22: 2021/03/19. 43: 2023/10/02
51: H02S; F24S; F24H; H02M
71: SYMION AUTOMATION AND ENERGY (PTY) LTD
72: LAUBSCHER, Daniel Francois Malan, DU PLESSIS, André Jacques, SHIRA, Shuaib, BECKER, Pierre Van Wyk
33: ZA 31: 2020/01767 32: 2020-03-20
54: SYSTEM AND METHOD FOR DRIVING A LOAD WITH A RENEWABLE ENERGY SOURCE
00: -
There is disclosed a system (10, 100) and method (1000) for controlling electrical power delivered from a renewable energy source (12, 112) to a load (14, 114). The system may include a boost circuit (38, 138) configured to receive electrical power from the renewable energy source and to boost a voltage of the received electrical power by multiplying its voltage by a factor (192) to yield a higher voltage greater than a voltage of a maximum power point of the renewable energy source. The system may further include a buck circuit (40, 140) that has an input for receiving the higher voltage and an output for delivering an output voltage of the buck circuit to the load. The buck circuit may be configured to reduce its output voltage, so that the output voltage

of the buck circuit is closer to the maximum power point.

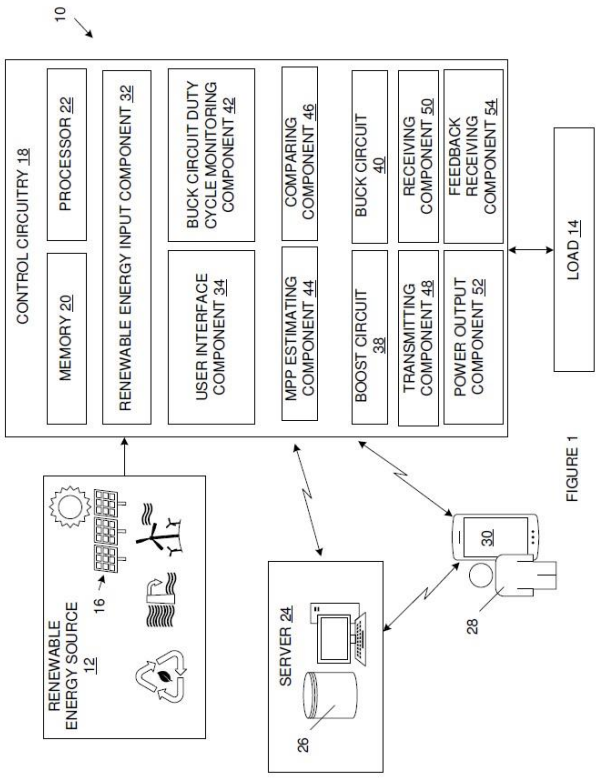

FIGURE 1

21: 2021/01893. 22: 2021/03/19. 43: 2023/08/02
51: F03D
71: O-INNOVATIONS LTD.
72: ORELLANA OLGUÍN, Nicolás Gonzalo
33: CL 31: 2529-2018 32: 2018-09-04
54: OMNIDIRECTIONAL GENERATING DEVICE
00: -
The application relates to an omnidirectional generating device that is able to transform the thrust of a fluid from any direction in the vertical, horizontal or diagonal planes into rotational movement around a single axis. This rotational movement can be transformed into electrical energy using known means.

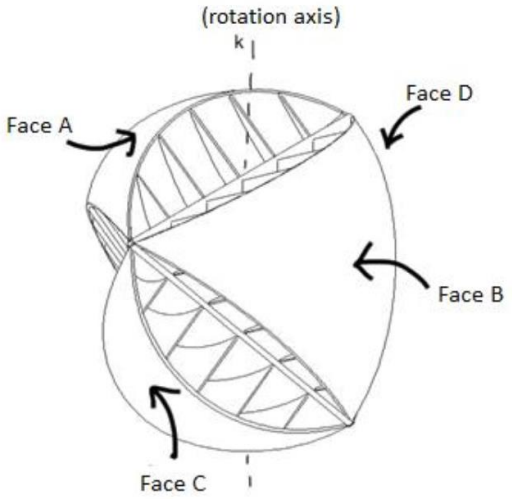

21: 2021/01897. 22: 2021/03/19. 43: 2023/08/24
51: C07D
71: FMC CORPORATION
72: MCCANN, STEPHEN FREDERICK, STEVENSON, THOMAS MARTIN
33: US 31: 62/737,897 32: 2018-09-27
54: INTERMEDIATES FOR PREPARING HERBICIDAL PYRIDAZINONES
00: -
Disclosed is a compound of Formula I, including *N*-oxides, and salts thereof, wherein R^1, R^2 and R^3 are defined as set forth in the disclosure. Also disclosed is a process for preparing a compound of Formula I. A compound of Formula I can also be used as a synthetic intermediate to prepare pyridazinone-based herbicides.

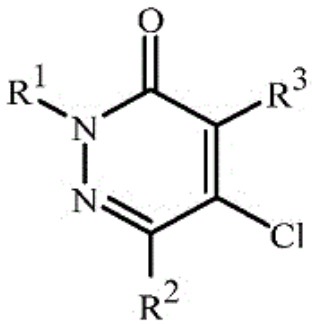

I

21: 2021/01924. 22: 2021/03/23. 43: 2023/08/25
51: H04W
71: SHARP KABUSHIKI KAISHA, FG INNOVATION COMPANY LIMITED

72: YOSHIMURA, TOMOKI, SUZUKI, SHOICHI, NOGAMI, TOSHIZO, OUCHI, WATARU, LEE, TAEWOO, LIN, HUIFA
33: JP 31: 2018-181507 32: 2018-09-27
54: TERMINAL APPARATUS, BASE STATION APPARATUS, AND COMMUNICATION METHOD
00: -
A terminal device is provided with: a reception unit which monitors, in an active downlink BWP of a serving cell in a secondary cell group (SCG), a PDCCH accompanied by a DCI format used for PDSCH scheduling, and receives the PDSCH in the downlink BWP; and a transmission unit which transmits HARQ-ACK in PUCCH. The value N_{RIV} of a frequency resource allocation field included in the DCI format is equal to $N^{size}_{BWP}*(L_{RBs}-1)+RB_{start}$ when $L_{RBs}-1$ is not more than floor($N^{size}_{BWP}/2$). The N_{RIV} is equal to $N^{size}_{BWP}*(N^{size}_{BWP}-L_{RBs}+1)+(N^{size}_{BWP}-1-RB_{start})$ when $L_{RBs}-1$ is greater than floor($N^{size}_{BWP}/2$). The floor($N^{size}_{BWP}/2$) is the largest integer in a range not exceeding $N^{size}_{BWP}/2$. The RB_{start} is a resource block at the head of PDSCH allocation. The L_{RBs} is the number of resource blocks allocated to the PDSCH. The N^{size}_{BWP}, when the DCI format is detected in a common search space, is given by the number of resource blocks of an initial downlink BWP set by a first parameter.

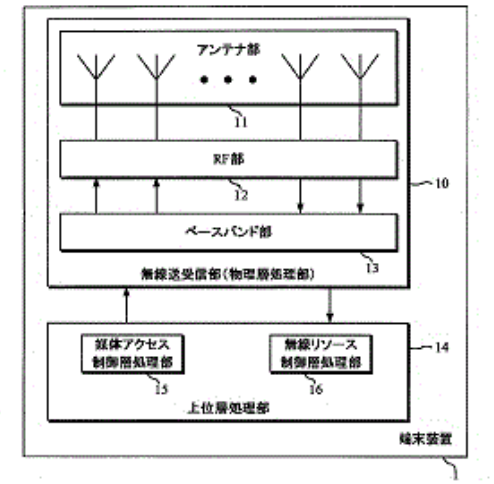

FIG. 5:
1 Terminal device
10 Wireless transmission/reception unit (physical layer processing unit)

21: 2021/01992. 22: 2021/03/24. 43: 2023/08/25
51: H04N
71: VID SCALE, INC.

72: HE, YUWEN, LUO, JIANCONG, XIU, XIAOYU, YE, YAN
33: US 31: 62/736,790 32: 2018-09-26
33: US 31: 62/786,641 32: 2018-12-31
54: BI-PREDICTION FOR VIDEO CODING
00: -
Systems, methods, and instrumentalities may be provided for determining whether to bypass bi-directional optical flow (BDOF) if BDOF is used in combination with bi-prediction with coding unit (CU) weights (e.g., generalized bi-prediction (GBi)). A coding system may combine coding modes, coding techniques, and/or coding tools. The coding system may include a wireless transmit/receive unit (WTRU). For example, the coding system may combine BDOF and bi-prediction with GU weights (BCW). BDOF may include refining a motion vector associated with a current CU based at least in part on gradients associated with a location in the current CU. The coding system may determine that BDOF is enabled, and/or that bi-prediction with CU weights is enabled for the current CU. The coding system's determination that bi-prediction with CU weights is enabled and/or that BDOF is enabled may be based on one or more indications.

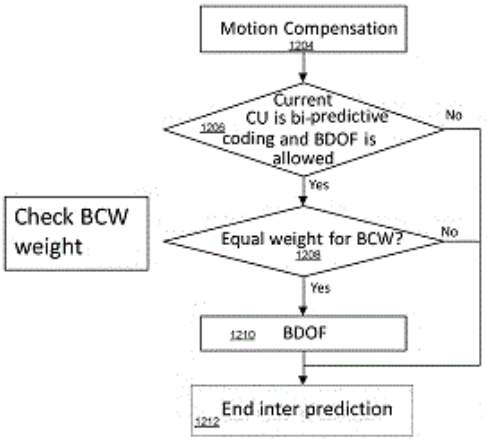

FIG. 12

21: 2021/02054. 22: 2021/03/26. 43: 2023/08/16
51: B65D
71: SACMI COOPERATIVA MECCANICI IMOLA SOCIETÀ COOPERATIVA
72: BASSI, VITTORIO, FALZONI, ALESSANDRO
33: IT 31: 102020000006496 32: 2020-03-27
54: COMBINATION OF A CAP FOR A CONTAINER AND A NECK OF THE CONTAINER
00: -

A combination of a closing cap (1') for and a neck (201) of a container (2), the cap comprising lateral and transversal walls (3,4), a (circumferentially interrupted) separation line (5') of the lateral wall defining a retaining ring (301'), configured to remain anchored to the neck and a closing element (302) to open or close the container. The retaining ring comprises a retaining portion (303), configured to engage internally with a locking ring (202) projecting from an outer surface of the neck. The retaining ring comprises a joining portion (305), first and second connecting bands (306,307), and a tab (308). The connecting bands are made by an incision line (7') which comprises first and second lateral stretches (702',703') which keep the retaining ring and closing element connected when same is open, while the tab can rest on the neck beyond an upper end (202c) of the locking ring.

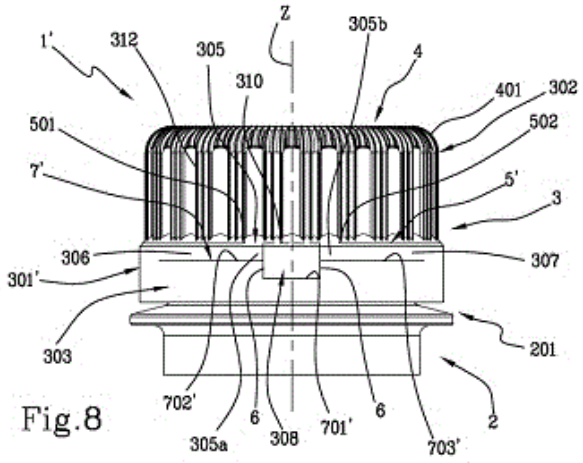

Fig.8

21: 2021/02108. 22: 2021/03/29. 43: 2023/08/01
51: A61K; A61Q
71: Colgate-Palmolive Company
72: GALIYARA, Tanaz, CHOPRA, Suman
54: WHITENING ORAL CARE COMPOSITION BASED ON A CROSS-LINKED PVP-H2C2 COMPLEX, A PEROXYSULFATE, A HYDROPHOBIC BASE AND SODIUM TRIPOLYPHOSPHATE
00: -
An oral care composition for whitening the teeth, including a peroxide source comprising a cross-linked PVP-H202 complex, a peroxysulfate whitening agent, a hydrophobic base, and sodium tripolyphosphate.

21: 2021/02115. 22: 2021/03/29. 43: 2023/08/07
51: A61K; A61P
71: CinDome Pharma, Inc.
72: PATEL, Piyush, PEARCE, Catherine, ISAACSOHN, Jonathan
33: US 31: 62/750,491 32: 2018-10-25
54: FORMULATIONS CONTAINING DEUTERATED DOMPERIDONE
00: -
The disclosure provides pharmaceutical formulations comprising d4-domperidone of the formula (I): (I) or a pharmaceutically acceptable salt thereof. The formulations also contain (i)a glyceryl stearate, and a medium chain triglyceride; or (ii) a stearoyl polyoxyl glyceride, a nonionic poly(ethylene oxide) polymer, and a medium chain triglyceride; or (iii) a nonionic poly(ethylene oxide) polymer, and a polyethylene glycol. The disclosure also provides methods for treating a disorder that is gastroparesis, nausea apart from gastroparesis, vomiting apart from gastroparesis, nausea associated with gastroparesis, vomiting associated with gastroparesis, gastroesophageal reflux disease, insufficient lactation, or a combination thereof in a patient, comprising administering to the patient a formulation described herein. In some aspects, the disorder is gastroparesis. In other aspects, the disorder is gastroesophageal reflux disease. In further aspects, the disorder is insufficient lactation.

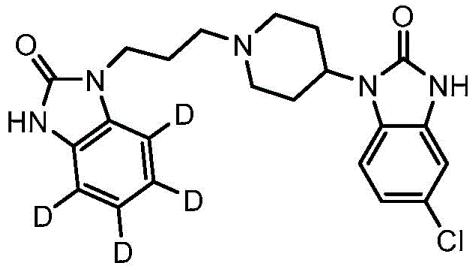

21: 2021/02159. 22: 2021/03/30. 43: 2023/08/25
51: A23L
71: UNILEVER IP HOLDINGS B.V.
72: BATENBURG, AMIR MAXIMILIAAN, VAN HOEK, JACOBA CAROLINA, KOEK, JEAN HYPOLITES
33: EP 31: 18202703.7 32: 2018-10-25
54: PROCESS FOR THE PREPARATION OF A FLAVOURING
00: -

The present invention relates to a method for the preparation of a flavouring, comprising the steps of (i) providing a reaction mixture comprising yeast extract comprising at least 0.5 wt.%, by weight of dry matter of yeast extract, glycosylamine and/or derivatives thereof and at least 1.0 wt.%, by weight of dry yeast extract, thiol containing compounds; at least 2 wt.%, by weight of the reaction mixture, acid; at least 10 wt.%, by weight of the reaction mixture, water; (ii) heating the reaction mixture at a temperature in the range of 90-160 °C; wherein the heated reaction mixture has an acidity such that a 1 wt.% dilution in demineralised water has a pH of in the range of 3.5 and 6 at 20 °C and (ii)optionally drying the product.

21: 2021/02224. 22: 2021/04/01. 43: 2023/08/16
51: G06Q
71: EFTSURE PTY LTD
72: CHAZAN, Mark, Mervyn, KONTOROVICH, Michael
33: AU 31: 2018903266 32: 2018-09-04
54: A SYSTEM AND PROCESS FOR THE VERIFICATION OF DATA
00: -
The present invention relates to an apparatus and method for verification of data contained in an unstructured data source, such as a supplier invoice. It is very difficult to obtain information from an unstructured data source, such as an invoice, using processing technology, without error. The apparatus and method are arranged to locate a predetermined data element in the invoice, using an optical character recognition application. The predetermined data element may be a company number, such as an ABN. The ABN can then be used to access databases to obtain further information relating to the supplier. For example, account details. The further information can be cross referenced against the unstructured data to confirm that the further information, such as account number is present in the unstructured data.

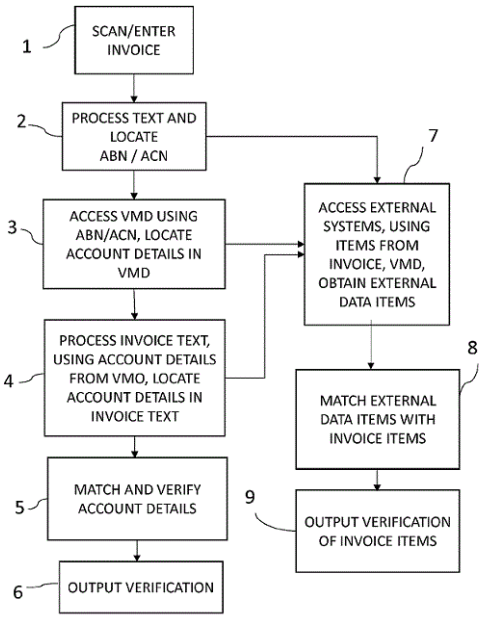

21: 2021/02282. 22: 2021/04/06. 43: 2023/08/16
51: C01B; B01D; B01J
71: JOHNSON MATTHEY PUBLIC LIMITED COMPANY
72: KILMARTIN, JOHN, SANKARAN, ASHWIN, THOMPSETT, DAVID
33: GB 31: 1819416.7 32: 2018-11-29
54: METHOD TO MODIFY THE SURFACE OF A MOLECULAR SIEVE WITH AN AMINOSILANE
00: -
A method for modifying the surface of a molecular sieve, comprising reacting a molecular sieve with an aminosilane, wherein the reaction is carried out in an aqueous solvent. A modified molecular sieve obtained by the method is also described.

21: 2021/02344. 22: 2021/04/09. 43: 2023/09/14
51: G01N
71: REGENERON PHARMACEUTICALS, INC.
72: WANG, Shunhai, YAN, Yuetian
33: US 31: 62/753,633 32: 2018-10-31
33: US 31: 62/863,617 32: 2019-06-19
54: METHOD AND SYSTEM OF IDENTIFYING AND QUANTIFYING A PROTEIN
00: -
Methods and system for identifying and/or quantifying a protein are provided herein.

21: 2021/02364. 22: 2021/04/09. 43: 2023/08/25
51: A01N; A01P
71: CORTEVA AGRISCIENCE LLC

72: KISTER, JEREMY, SATCHIVI, NORBERT M
33: US 31: 62/756,745 32: 2018-11-07
54: COMPOSITIONS COMPRISING PYRIDINE CARBOXYLATE HERBICIDES WITH ACETOLACTATE SYNTHASE (ALS) INHIBITOR HERBICIDES
00: -
Disclosed herein are compositions comprising (a) a pyridine carboxylate herbicide or an agriculturally acceptable N-oxide, salt, or ester thereof and (b) an acetolactate synthase (ALS) inhibitor or an agriculturally acceptable salt or ester thereof. Also disclosed herein are methods of controlling undesirable vegetation, comprising applying to vegetation or an area adjacent the vegetation or applying in soil or water to control the emergence or growth of vegetation (a) a pyridine carboxylate herbicide or an agriculturally acceptable N-oxide, salt, or ester thereof and (b) an ALS inhibitor or an agriculturally acceptable salt or ester thereof.

21: 2021/02388. 22: 2021/04/12. 43: 2023/08/25
51: A01N; A01P
71: CORTEVA AGRISCIENCE LLC
72: SATCHIVI, NORBERT M, KISTER, JEREMY
33: US 31: 62/756,708 32: 2018-11-07
54: COMPOSITIONS COMPRISING PYRIDINE CARBOXYLATE HERBICIDES WITH SYNTHETIC AUXIN HERBICIDES OR AUXIN TRANSPORT INHIBITORS
00: -
Disclosed herein are compositions comprising (a) a pyridine carboxylate herbicide or an agriculturally acceptable N-oxide, salt, or ester thereof and (b) a synthetic auxin herbicide, an auxin transport inhibitor, agriculturally acceptable salts or esters thereof, or combinations thereof. Also disclosed herein are methods of controlling undesirable vegetation, comprising applying to vegetation or an area adjacent the vegetation or applying in soil or water to control the emergence or growth of vegetation (a) a pyridine carboxylate herbicide or an agriculturally acceptable N-oxide, salt, or ester thereof and (b) a synthetic auxin herbicide, an auxin transport inhibitor, agriculturally acceptable salts or esters thereof, or combinations thereof.

21: 2021/02501. 22: 2021/04/15. 43: 2023/08/11
51: A24F
71: Nicoventures Trading Limited
72: WRIGHT, Jeremy
33: GB 31: 1816831.0 32: 2018-10-16
54: AEROSOL PROVISION DEVICE
00: -
An electronic aerosol provision device, the device comprising a housing for receipt of an aerosol generating component, the housing comprising an air inlet and an aerosol outlet, wherein the device is configured to induce a reduction in the temperature of an aerosol when exiting the air inlet.

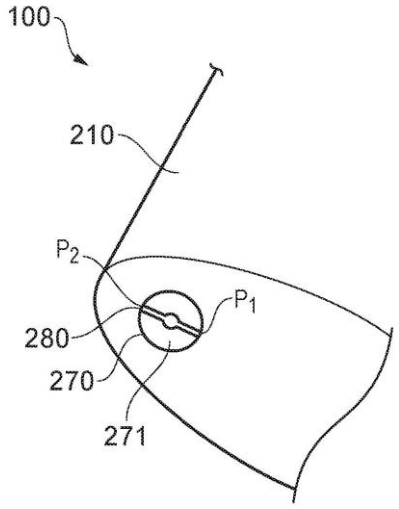

21: 2021/02544. 22: 2021/04/16. 43: 2023/08/25
51: A61K; A61P
71: JIANGSU HENGRUI MEDICINE CO., LTD., SHANGHAI HENGRUI PHARMACEUTICAL CO., LTD.
72: XU, JIANYAN, ZHANG, YING, CAI, XIAOFENG, QU, BOLEI, LIANG, JINDONG, ZHANG, LIANSHAN, HE, FENG, TAO, WEIKANG
33: CN 31: 201811123833.1 32: 2018-09-26
54: LIGAND-DRUG CONJUGATE OF EXATECAN ANALOGUE, PREPARATION METHOD THEREFOR AND APPLICATION THEREOF
00: -
The present invention relates to a ligand-drug conjugate of an exatecan analogue, a preparation method therefor and an application thereof. Specifically, the present invention provides a ligand-drug conjugate having a structure shown in formula (-D), a preparation method therefor, a pharmaceutical composition containing same, and use thereof in preparation of drugs for treating cancers by means of receptor regulation. The

definition of each substituent in formula (-D) is the same as that in the description.

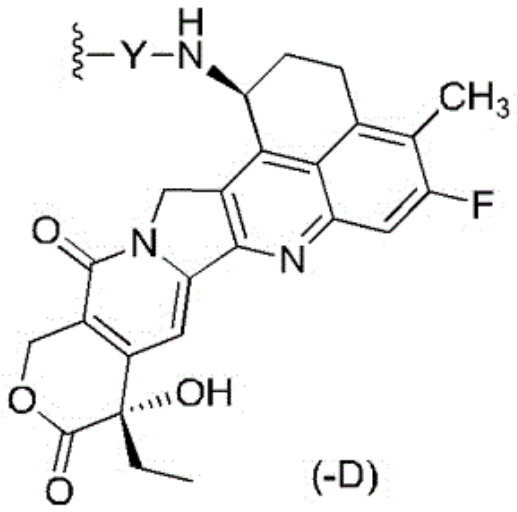

21: 2021/02546. 22: 2021/04/16. 43: 2023/08/25
51: G01N
71: REGENERON PHARMACEUTICALS, INC.
72: E, SOOK YEN, BRAMHALL, DAVID, QIU, HAIBO
33: US 31: 62/792,994 32: 2019-01-16
54: METHODS FOR IDENTIFYING FREE THIOLS IN PROTEINS
00: -
Compositions and methods for identifying free thiols in protein are provided. An exemplary method labeling peptides with a tag to identify free thiols and a tag to identify native disulfide bonds and analyzing the tags using targeted MS^2. In one embodiment, the method provides complete coverage of all 32 cysteine residues in an IgG molecule. In other embodiments the method covers the 16 cysteine residues on the heavy and light chains in an IgG molecule. In another embodiment, the method covers the 5 cysteine residues on each light chain of an IgG molecule. In another embodiment, the method covers the 11 cysteine residues on each heavy chain of an IgG molecule.

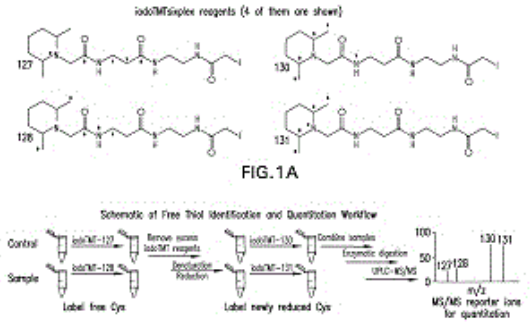

FIG.1A

21: 2021/02547. 22: 2021/04/16. 43: 2023/08/25
51: G01N
71: REGENERON PHARMACEUTICALS, INC.
72: WANG, SHUNHAI
33: US 31: 62/792,994 32: 2019-01-16
54: METHODS FOR CHARACTERIZING DISULFIDE BONDS
00: -
Compositions and methods for analyzing disulfide bonds are provided. An exemplary method includes preparing peptide standards having no disulfide bonds, scrambled disulfide bond peptide standards, and native disulfide bond peptide standards according to the sequence of the region of the protein drug product that includes the disulfide bond, digesting a sample of protein drug product into peptides, separating the protein drug product peptides, analyzing the protein drug product peptides and the peptide standards, identifying scrambled and native disulfide bond peptides by retention time, and quantifying the level of scrambled disulfide bond peptides.



FIG. 1A

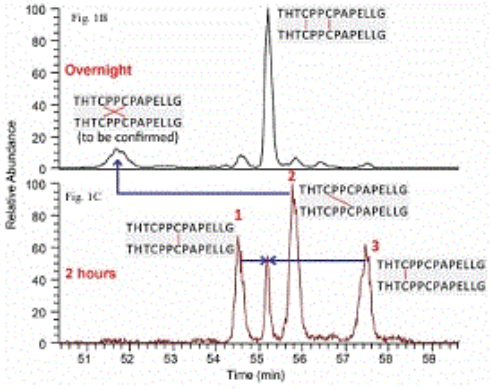

FIG. 1B-1C

21: 2021/02549. 22: 2021/04/16. 43: 2023/08/25
51: C07D; A01P; A01N
71: FMC CORPORATION
72: BEREZNAK, JAMES FRANCIS, TAGGI, ANDREW EDMUND, BOLGUNAS, STEPHEN P
33: US 31: 62/756,308 32: 2018-11-06
54: SUBSTITUTED TOLYL AS FUNGICIDES
00: -
Disclosed are compounds of Formula (1), including all geometric and stereoisomers, tautomers,*N*-oxides, and salts thereof, wherein A, Q, R^1, R^2, R3, R^4, W and Y are as defined in the disclosure. Also disclosed are compositions containing the compounds of Formula (1) and methods for controlling plant disease caused by a fungal pathogen comprising applying an effective amount of a compound or a composition of the invention.

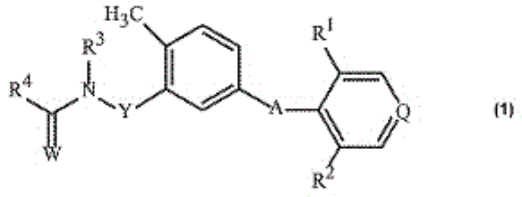

(1)

21: 2021/02618. 22: 2021/04/20. 43: 2023/08/25
51: A01N; A01P
71: CORTEVA AGRISCIENCE LLC
72: KISTER, JEREMY, SATCHIVI, NORBERT M
33: US 31: 62/756,827 32: 2018-11-07
54: COMPOSITIONS COMPRISING PYRIDINE CARBOXYLATE HERBICIDES AND 4-HYDROXYPHENYL-PYRUVATE DIOXYGENASE (HPPD) INHIBITOR HERBICIDES
00: -
Disclosed herein are compositions comprising (a) a pyridine carboxylate herbicide or an agriculturally acceptable N-oxide, salt, or ester thereof and (b) an HPPD inhibitor herbicide or an agriculturally acceptable salt or ester thereof. Also disclosed herein are methods of controlling undesirable vegetation, comprising applying to vegetation or an area adjacent the vegetation or applying in soil or water to control the emergence or growth of vegetation (a) a pyridine carboxylate herbicide or an agriculturally acceptable N-oxide, salt, or ester thereof and (b) an HPPD inhibitor herbicide or an agriculturally acceptable salt or ester thereof.

21: 2021/02620. 22: 2021/04/20. 43: 2023/08/25
51: A01N; A01P
71: CORTEVA AGRISCIENCE LLC
72: SATCHIVI, NORBERT M, KISTER, JEREMY
33: US 31: 62/756,716 32: 2018-11-07
54: COMPOSITIONS COMPRISING PYRIDINE CARBOXYLATE HERBICIDES AND ACETYL COA CARBOXYLASE (ACCASE) INHIBITOR HERBICIDES
00: -
Disclosed herein are compositions comprising (a) a pyridine carboxylate herbicide or an agriculturally acceptable N-oxide, salt, or ester thereof and (b) an ACCase inhibitor herbicide. Also disclosed herein are methods of controlling undesirable vegetation, comprising applying to vegetation or an area adjacent the vegetation or applying in soil or water to control the emergence or growth of vegetation (a) a pyridine carboxylate herbicide or an agriculturally acceptable N-oxide, salt, or ester thereof, and (b) a ACCase inhibitor herbicide.

21: 2021/02628. 22: 2021/04/20. 43: 2023/08/21
51: A61K; A61P; C07D
71: Merck Sharp & Dohme LLC
72: ARASAPPAN, Ashok, BELL, Ian M., BRESLIN, Michael J., BUNGARD, Christopher James, BURGEY, Christopher S., CHOBANIAN, Harry R., COX, Jason M., GUIADEEN, Deodial Guy, JONES, Kristen L. G., LAYTON, Mark E., LIU, Hong, LIU, Jian, PERKINS, James J., STACHEL, Shawn J., SUEN-LAI, Linda M., WU, Zhe, GINNETTI, Anthony T.
33: US 31: 62/754,742 32: 2018-11-02

54: 2-AMINO-N-HETEROARYL-NICOTINAMIDES AS NAV1.8 INHIBITORS

00: -

Novel compounds of the structural formula (I), and the pharmaceutically acceptable salts thereof, are inhibitors of Nav1.8 channel activity and may be useful in the treatment, prevention, management, amelioration, control and suppression of diseases mediated by Nav1.8 channel activity. The compounds of the present invention may be useful in the treatment, prevention or management of pain disorders, cough disorders, acute itch disorders, and chronic itch disorders.

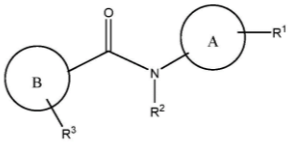

(I)

21: 2021/02668. 22: 2021/04/21. 43: 2023/08/29
51: C01B; C08K; H01M; B82Y
71: SICONA BATTERY TECHNOLOGIES PTY LTD
72: WALLACE, GORDON GEORGE, OFFICER, DAVID LESLIE, JALILI, ROUHOLLAH, WALKER, ASHLEY JOHN, RYDER, GREGORY MICHAEL, FAISAL, SHAIKH NAYEEM
33: AU 31: 2018903793 32: 2018-10-08

54: DISPERSIBLE EDGE FUNCTIONALISED GRAPHENE PLATELETS

00: -

The present disclosure provides a dispersible graphene platelet and a method of making same. The structure of the graphene platelet 10 comprises a base layer 1 of graphene on which at least one discontinuous layer 2, 3, 4 of graphene is stacked, with each layer of graphene above the base layer having a smaller surface area than the layer it is stacked upon. The edges of the base layer and the discontinuous layers stacked upon it are all at least partially functionalised 5, providing a structure with graphene-like properties owing to the base layer and relatively high dispersibility owing to the increased amount of functionalised groups on each platelet. The platelets may be used for a number of applications, for example in the production of electrodes or composite materials.

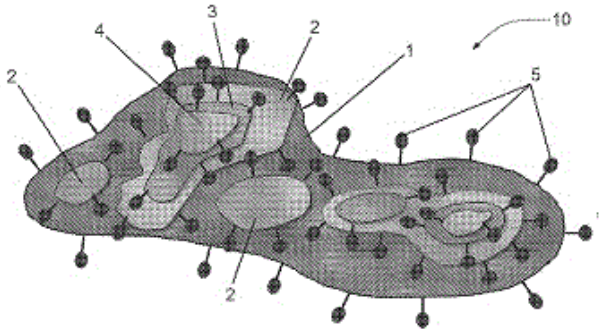

21: 2021/02696. 22: 2021/04/22. 43: 2023/08/29
51: C07K; A61K; A61P
71: JIANGSU HANSOH PHARMACEUTICAL GROUP CO., LTD., SHANGHAI HANSOH BIOMEDICAL CO., LTD., CHANGZHOU HANSOH PHARMACEUTICAL CO., LTD.
72: YING, HUA, ZHANG, LING, ZHANG, TING, ZHANG, LEI, XU, JIANYAN, TAO, WEIKANG
33: CN 31: 201811156667.5 32: 2018-09-30

54: ANTI-B7H3 ANTIBODY-EXATECAN ANALOG CONJUGATE AND MEDICINAL USE THEREOF

00: -

Disclosed by the present invention are an anti-B7H3 antibody-exatecan analog conjugate, a preparation method therefor and an anti-tumor medicinal use thereof.

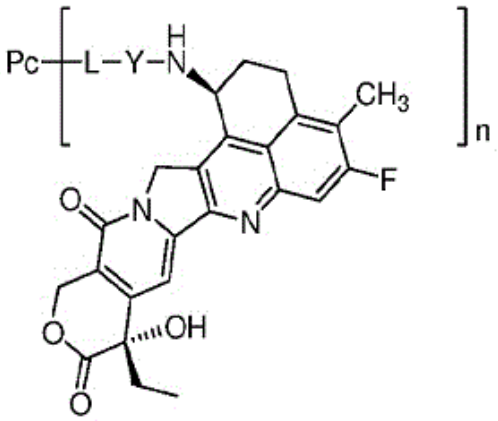

(Pc-L-Y-Dr)

21: 2021/02701. 22: 2021/04/22. 43: 2023/08/29
51: A61P; C07D; A61K
71: METYS PHARMACEUTICALS AG
72: FARINA, CARLO, SCHERZ, MICHAEL, GHELARDINI, CARLA, DI CESARE MANNELLI, LORENZO
33: EP 31: 18210106.3 32: 2018-12-04

54: SYNERGISTIC COMPOSITIONS COMPRISING (R)-2-(2-OXOPYRROLIDIN-1-YL)BUTANAMIDE AND (S)-2-(2-OXOPYRROLIDIN-1-YL)BUTANAMIDE IN A NON-RACEMIC RATIO
00: -
The present invention relates to a composition of the enantiomers of 2-(2-oxopyrrolidin-1- yl)butanamide and pharmaceutically acceptable solvates or co-crystals thereof in a certain ratio, a pharmaceutical composition comprising said composition, its use as a medicament and the use of the inventive compositions or pharmaceutical compositions in the treatment and/or prevention of a disease or disorder typically and preferably selected from seizure-related disorders, peripheral sensory neuropathy, preferably peripheral neuropathic pain; seizure; depression; or cognitive impairment.

21: 2021/02702. 22: 2021/04/22. 43: 2023/08/29
51: A01N; A01P
71: DIVERSEY, INC.
72: TINWALA, FARIDA H, LI, XIAOBAO, SILVA, DECIO R JR., NABAR, YOGARAJ, GENGLER, ARNOUD UBALD MARIA
33: US 31: 62/923,650 32: 2019-10-21
33: US 31: 62/786,176 32: 2018-12-28
54: SYNERGISTIC DISINFECTANT COMPOSITIONS HAVING ENHANCED ANTIMICROBIAL EFFICACY AND STABILITY, AND METHODS OF USING THE SAME
00: -
A synergistic disinfectant composition comprises a Cl-8 organic acid, an amino acid based surfactant, an anionic surfactant, and a stabilizing agent. The Cl-8 organic acid may include two or more types of the Cl-8 organic acids with at least one of the Cl-8 organic acids is alpha hydroxyl acid. The disinfectant composition has an antimicrobial activity of log reduction of at least 2 under Biocidal Product Registration (BPR) standard EN13727, EN1276, EN13624 or EN1499, and/or the EPA standard that applies the*"Quantitative Methods for Evaluating the Activity of Microbicides used on Hard, Non-Porous Surface"*issued by the Organisation for Economic Co-operation and Development (OECD). In addition, the disinfectant composition may be stable during storage and retain their antimicrobial activity after at least one month at 40 °C. When desired, the synergistic disinfectant composition may further comprise an oxidizing agent.

21: 2021/02736. 22: 2021/04/23. 43: 2023/08/28
51: A01G
71: POSTMA, Clayton Julian
72: POSTMA, Clayton Julian
33: ZA 31: 2018/07536 32: 2018-11-09
54: FLUID RETENTION COMPOUND
00: -
This invention relates to a fluid retention compound and more specifically, but not exclusively, to a fluid retention compound for use in agriculture, mining and construction. Retention of water using moisture absorbers is known in the art and used to improve the water-holding capacity of various media. A problem with existing moisture absorbers is the relatively ineffective rate at which water is retained and nutrients absorbed. In accordance with the invention there is provided a fluid retention compound comprising a superabsorbent polymer, an adsorbent, and a pH modifier. It is envisaged that the invention will provide a fluid retention compound which increases the efficacy of its water holding capacity, nutrient uptake and adsorption of other substances.

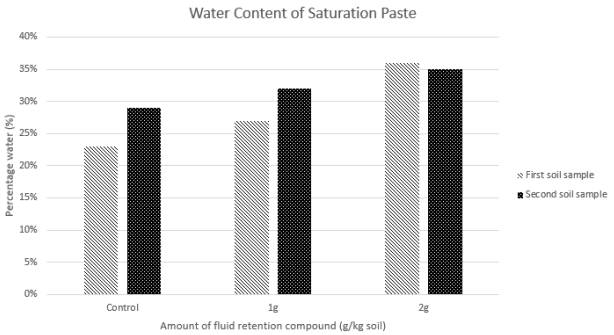

21: 2021/02792. 22: 2021/04/26. 43: 2023/08/29
51: C07C; B01D
71: CHANGCHUN MEIHE SCIENCE AND TECHNOLOGY DEVELOPMENT CO., LTD.
72: YUAN, YI
33: CN 31: 201811151458.1 32: 2018-09-29
54: METHOD FOR REFINING BIO-BASED PROPYLENE GLYCOL
00: -
A method for refining bio-based propylene glycol, wherein impurities having a boiling point close to that of propylene glycol are separated. In the present method, C_5-C_{20}lipophilic alcohol compounds, C_5-C_{20}alkanes and/or C_4-C_{20}lipophilic ketone compounds are used as azeotropic agents to

implement azeotropy with bio-based propylene glycol to obtain an azeotrope containing propylene glycol; the azeotropic agents in the azeotrope are then separated and removed to obtain crude propylene glycol; and the crude propylene glycol is further purified to obtain propylene glycol.

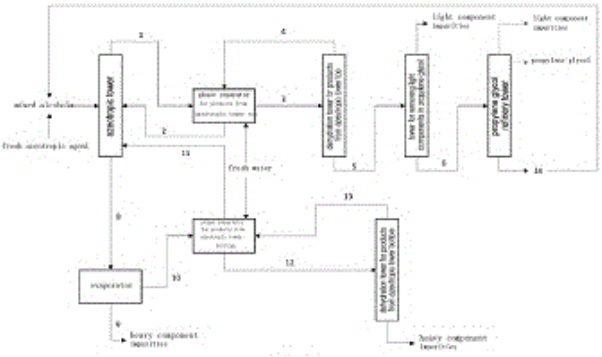

21: 2021/02944. 22: 2021/04/30. 43: 2023/08/29
51: B07C; B02C
71: MMD DESIGN & CONSULTANCY LIMITED
72: PEARSON, CHRISTOPHER
33: GB 31: 1820431.3 32: 2018-12-14
54: MATERIAL CONVEYOR, SYSTEM AND METHOD FOR THE MOVEMENT OF MATERIAL
00: -
A material conveyor apparatus is described comprising a conveyer device having a material receiving end suitable for receiving material such as overburden or mineral at a working site, a material discharge end distal of the material receiving end, and a material transport system disposed between the material receiving end and the discharge end so as in use to cause material received at the material receiving end to be conveyed to the material discharge end; an scanning system comprising a scanning device disposed to scan the material being conveyed to the material discharge end and obtain a response from the material from which the material may be classified at least into two classes comprising at least a waste class and a useable ore class based on the response; a chassis supporting the conveyor device and the scanning device; a transport carriage supporting the chassis and adapted to cause the chassis to be movable across a surface for deployment in use.

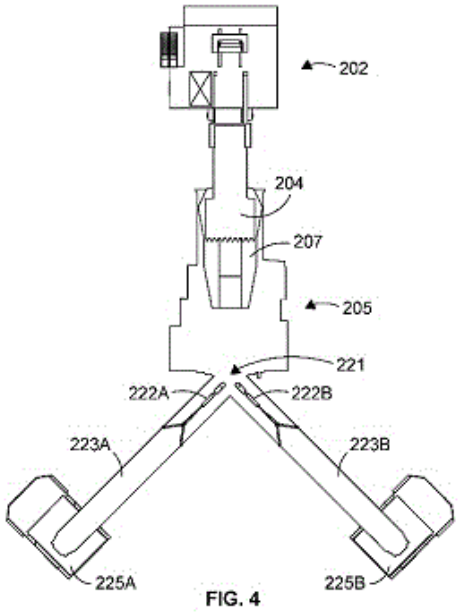

FIG. 4

21: 2021/02974. 22: 2021/05/03. 43: 2023/08/29
51: C07D; A61K; A61P
71: CUROVIR AB
72: WESTMAN, JACOB
33: EP 31: 18199486.4 32: 2018-10-10
54: 2,6-DIMETHYL-N-((PYRIDIN-4-YL)METHYL)IMIDAZO[1,2-B]PYRIDAZIN-8-AMINE AND 2,5-DIMETHYL-N-[(PYRIDIN-4-YL)METHYL]PYRAZOLO[1,5-A]PYRIMIDIN-7-AMINE DERIVATIVES FOR TREATING VIRAL INFECTIONS
00: -
The compound is useful in therapy, in particular as an antiviral agent, e.g. in the treatment of an RNA viral infection. A pharmaceutical composition comprising the compound.

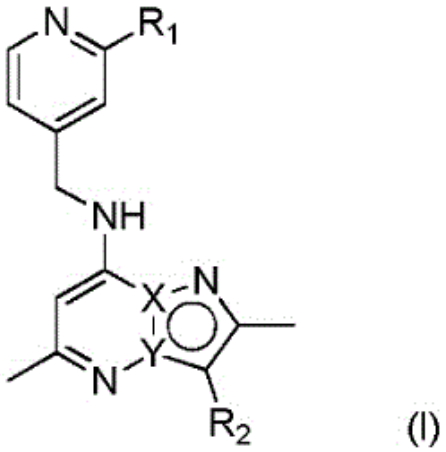

(I)

21: 2021/02989. 22: 2021/05/04. 43: 2023/08/16
51: B42D
71: SICPA HOLDING SA
72: CALLEGARI, Andrea, DEGOTT, Pierre, DINOEV, Todor, EGGER, Philipp
33: EP(CH) 31: 18198945.0 32: 2018-10-05
54: OPTICAL SECURITY ELEMENTS, MARKED OBJECT, METHOD OF AUTHENTICATING AN OBJECT AND USE OF OPTICAL SECURITY ELEMENTS FOR AUTHENTICATING OR SECURING AGAINST COUNTERFEITING
00: -
An optical security element made of a refractive transparent or partially transparent optical material and comprising an optical assembly of a caustic layer having a light-redirecting surface with a relief pattern of given depth and a focal length fC and an adjacent lens element of focal length fL configured to redirect incident light received from a point-like light source through it and to form a projected image containing a caustic pattern directly on a retina of an observer. A marked object, as well as a method of visually authenticating an object, and use of optical security elements for authenticating or securing against counterfeiting are also disclosed.

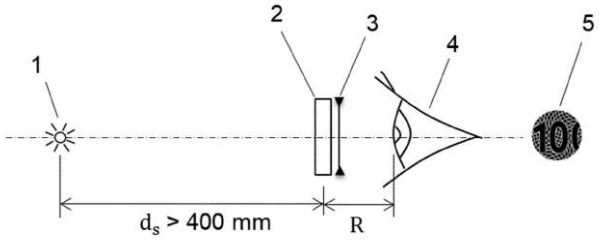

21: 2021/02995. 22: 2021/05/04. 43: 2023/08/23
51: A61K; A61P; G01N
71: Colgate-Palmolive Company
72: MANUS, Lisa, STRANICK, Michael, WU, Donghui
33: US 31: 62/782,838 32: 2018-12-20
54: ORAL CARE COMPOSITION COMPRISING ZINC AND AN AMINO ACID FOR TREATING SYMPTOMS OF A GASTRIC DISORDER IN THE ORAL CAVITY
00: -
Provided herein are methods of treating one or more symptoms of a gastric disorder in the oral cavity of a subject in need thereof, wherein the method comprises applying to the subjects teeth an oral care composition comprising a basic amino acid in free or salt form, wherein the basic amino acid is arginine (e.g., free form arginine); zinc oxide and zinc citrate; and an orally acceptable carrier.

21: 2021/03063. 22: 2021/05/06. 43: 2023/08/29
51: A23C; C12R
71: DUPONT NUTRITION BIOSCIENCES APS
72: PIANFETTI, MIKAEL, BURET, FABIEN, MORNET, ANNIE
33: EP 31: 18203296.1 32: 2018-10-30
54: METHODS AND CULTURES TO MANUFACTURE PIZZA CHEESE
00: -
ABSTRACT The application is directed to a method to manufacture pasta-filata cheese based on cultures comprising or consisting of either 1) at least a galactose-positive Streptococcus thermophilus strain as defined herein or 2) at least a Streptococcus thermophilus strain and a Lactococcus lactis strain, and to a stretched curd or cheese produced by this method. The application is also directed to a culture or kit-of-part comprising or consisting of a) a galactose- positive Streptococcus thermophilus strain as defined herein, and b) Lactococcus strain(s) and/or Lactobacillus helveticus strain(s).

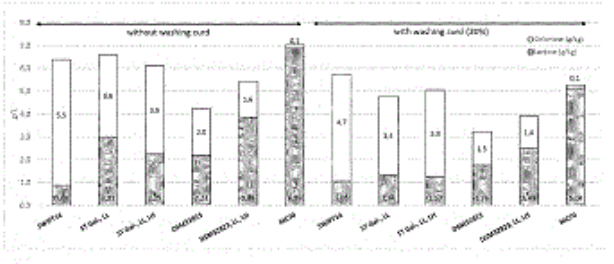

21: 2021/03180. 22: 2021/05/11. 43: 2023/08/23
51: A61K; A61P; G01N
71: Colgate-Palmolive Company
72: MANUS, Lisa, STRANICK, Michael, WU, Donghui
33: US 31: 62/782,805 32: 2018-12-20
54: ORAL CARE COMPOSITION COMPRISING ZINC AND AN AMINO ACID FOR TREATING SYMPTOMS OF A GASTRIC DISORDER IN THE ORAL CAVITY
00: -
Provided herein are methods of treating one or more symptoms of a gastric disorder in the oral cavity of a subject in need thereof, wherein the method

comprises applying to the subjects teeth an oral care composition comprising a basic amino acid in free or salt form, wherein the basic amino acid is arginine (e.g., free form arginine); zinc oxide and zinc citrate; and an orally acceptable carrier.

21: 2021/03181. 22: 2021/05/11. 43: 2023/08/16
51: A61K; A61Q
71: Colgate-Palmolive Company
72: DAEP, Carlo, MAKWANA, Ekta, ZAIDEL, Lynette
33: US 31: 62/784,945 32: 2018-12-26
54: REDUCTION OF PATHOGENIC BACTERIA USING ARGININE
00: -
Methods of reducing total pathogenic oral bacteria load within an individual's oral cavity are disclosed. Methods of selectively promoting growth of beneficial oral bacteria relative to growth of pathogenic oral bacteria in a population of bacteria that comprises beneficial oral bacteria and pathogenic oral bacteria, such as in an individual's oral cavity, are disclosed. Methods of selectively promoting growth of beneficial oral bacteria relative to growth of pathogenic oral bacteria in biofilm that comprises beneficial oral bacteria and pathogenic oral bacteria, including biofilm in an individual's oral cavity, are also disclosed, Methods of identifying a compound or composition that enhances the selective promotion of growth of beneficial oral bacteria relative to growth of pathogenic oral bacteria by arginine and methods of identifying a compound or composition that enhances the selective promotion of growth of beneficial oral bacteria relative to growth of pathogenic oral bacteria in biofilm by arginine are disclosed.

21: 2021/03226. 22: 2021/05/12. 43: 2023/08/29
51: B64D; B64C; F16M
71: VENTER, JACQUES
72: VENTER, JACQUES
33: ZA 31: 2019/03959 32: 2019-06-19
54: PAYLOAD DELIVERY MECHANISM SUITABLE FOR USE WITH A DRONE
00: -
This invention relates to a payload delivery mechanism suitable for use with a drone. The mechanism includes a load carrying and release mechanism which is displaceable between a retaining position, in which at least part of the payload is retained by the load carrying and release mechanism, and a release position, in which the at least part of the payload is releasable from the load carrying and release mechanism. The mechanism has a first release mode in which the load carrying and release mechanism is displaced from the retaining position to the release position by an actuator that is in use electrically actuated, and a second release mode in which the load carrying and release mechanism is displaced, against the bias exerted by the biasing element, from the retaining position to the release position when a predetermined maximum external load is exerted on the load carrying and release mechanism.

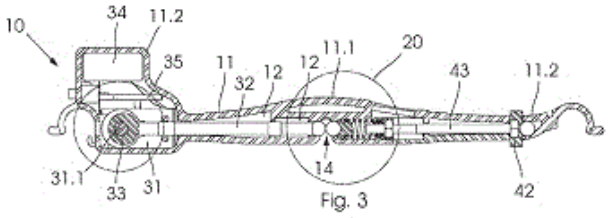

Fig. 3

21: 2021/03287. 22: 2021/05/14. 43: 2023/08/29
51: G08G; G01S
71: LASER TECHNOLOGY, INC., KAMA-TECH (HK) LIMITED
72: CHUNG, JI YOON, DUNNE, JEREMY G
33: US 31: 62/769,803 32: 2018-11-20
54: HANDHELD LASER-BASED VEHICLE SPEED MEASUREMENT DEVICE INCORPORATING AN AUTOMATIC NUMBER PLATE RECOGNITION (ANPR) FUNCTION
00: -
Disclosed herein is a handheld speed gun incorporating automatic number plate recognition (ANPR) functionality. As the image size of a vehicle license plate varies depending on its distance from the speed gun, in the present invention the distance to the target vehicle is known through the functionality of the laser sensor so the size of the pixels for the number plate can be estimated. Since the image of the number plate may be tilted in a handheld device, the present invention compensates for this by use of the instrument's tilt sensor or through other compensation by use of the image itself.

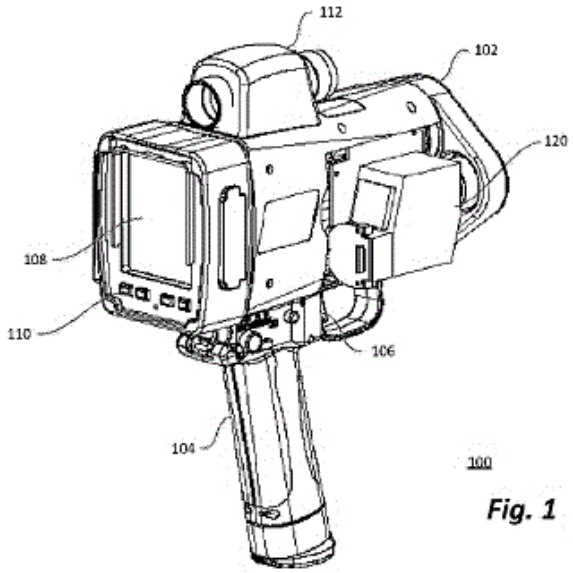

Fig. 1

21: 2021/03322. 22: 2021/05/17. 43: 2023/08/16
51: C04B
71: TECHNOLOGIES AVANCEES ET MEMBRANES INDUSTRIELLES
72: LESCOCHE, PHILIPPE, ANQUETIL, JÉRÔME
33: FR 31: 1871952 32: 2018-11-27
54: METHOD FOR MATERIAL ADDITIVE MANUFACTURING OF AN INORGANIC FILTER SUPPORT FROM A HOT-MELT COMPOSITION AND RESULTING MEMBRANE
00: -
The invention relates to a method for manufacturing at least one porous single-piece inorganic support (1) having a porosity of between 10% and 60% and an average pore diameter ranging from 0.5 µm to 50 µm, using a 3D printer-type machine (I) designed to build following a digital 3D model, and a manipulable three-dimensional green structure (2) designed to form, after sintering, the porous single-piece inorganic support(s) (1).

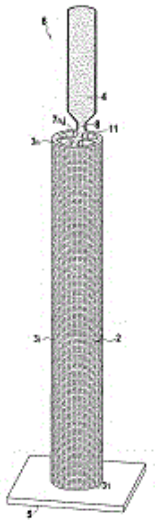

21: 2021/03326. 22: 2021/05/17. 43: 2023/08/23
51: A61K; A61Q
71: Colgate-Palmolive Company
72: EVANS, Lauren, PATEL, Neeta Atul, PAPPAS, Iraklis, HU, Zhichao, THOMSON, Paul
33: US 31: 62/783,028 32: 2018-12-20
54: DENTIFRICE CONTAINING SODIUM BICARBONATE AND STANNOUS FLUORIDE
00: -
This invention relates to dentifrice compositions comprising a high level of sodium bicarbonate and a stannous ion source, as well as to methods of using these compositions. Optionally, the dentifrice compositions further comprise zinc oxide.

21: 2021/03627. 22: 2021/05/27. 43: 2023/09/14
51: G06F
71: BRANE COGNITIVES PTE. LTD.
72: BYRRAJU, Ramalinga Raju
33: IN 31: 201941001135 32: 2019-01-10
33: IN 31: 201941028675 32: 2019-07-16
54: NATURAL SOLUTION LANGUAGE
00: -
A computer-implemented method that effectively replaces 'programming code' in conveying application or solution logic to the computer using a natural language-based design. Without taking any reference to alien symbols or keywords, NSL uses standard and familiar natural-language-like constructs (any natural language, not just English) using a computer-implemented method to technically convey complex operating, application, and solution logic to the machine agents (computers) in a user-

friendly way. Using the same computer-implemented methodologies, it has the power to translate or reverse engineer all existing programming code into NSL. Fundamentally, NSL requires no 'programming code' expertise. Users can quickly and easily convey the logic directly to the computer or recruit available solution components with ease. In addition, the elimination of artificial barriers between information and processes, and merging them, solution logic embedded in computer programs and applications is brought into the purview of information search principles.

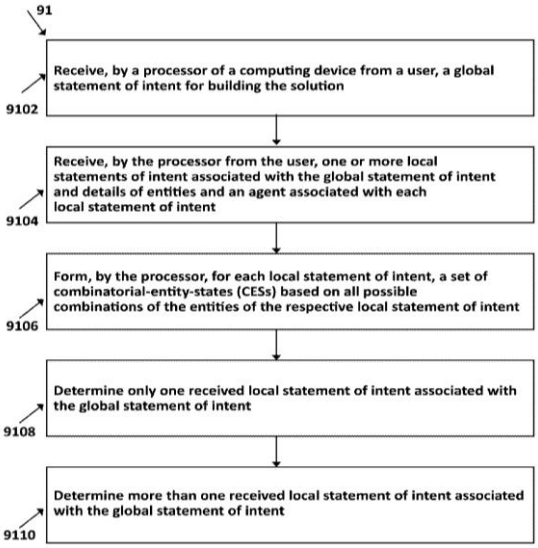

21: 2021/04197. 22: 2021/06/18. 43: 2023/08/17
51: A61L; C12M
71: KOLIGO THERAPEUTICS, INC.
72: WOLTERS, ROLF, VALENTI, JULES, GURSKI, TOM
54: CELL SEPARATION APPARATUS AND METHODS OF USE
00: -
Cell separation systems and methods of separating cells are disclosed. In an embodiment, the cell separation system comprises a non-transitory storage device comprising a plurality of logic associated with centrifugation programs, wherein execution of a centrifugation program separates a cell volume from a biologic material volume; a heating mechanism electrically coupled to a power supply; a containment mechanism; an assembly removably coupled to the containment mechanism, wherein the assembly comprises: a single-walled bowl comprising a product reservoir, plurality of cell concentration areas contained within the product reservoir, a digestion area, a waste reservoir, and a center column comprising an access tube removably coupled to the product reservoir, a mounting plate, and an alignment mechanism coupled to the bowl to restrict movement of the mounting plate when the first assembly is coupled to the containment mechanism.

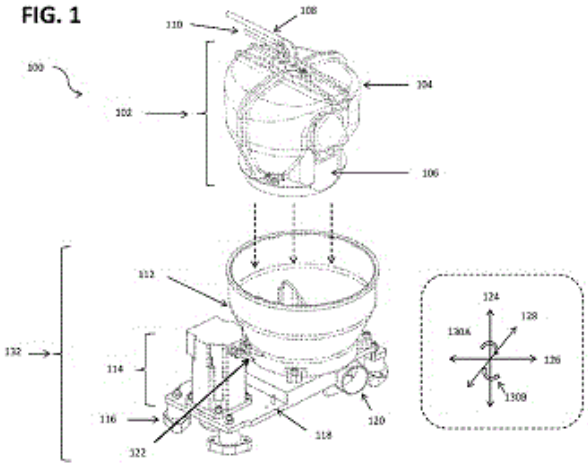

21: 2021/04227. 22: 2017/12/01. 43: 2023/08/21
51: A61K B01D C11B C01B G01N
71: NATURAL EXTRACTION SYSTEMS, LLC
72: THOMAS, C., Russell
33: US 31: 62/428,868 32: 2016-12-01
54: RAPID BOTANICAL OIL DISTILLATION DEVICE UTILIZING MICROWAVE AGENT
00: -
Various aspects of the disclosure relate to methods and systems for extracting plant oil from plant material. A system may comprise a microwave emitter, an extraction chamber, and a cooling chamber. Microwave radiation emitted by the microwave emitter may dielectrically heat a microwave absorbing agent, which may heat the plant oil of the plant material. Plant oil of the plant material may be volatized in the extraction chamber and may be directed into the cooling chamber to be condensed.

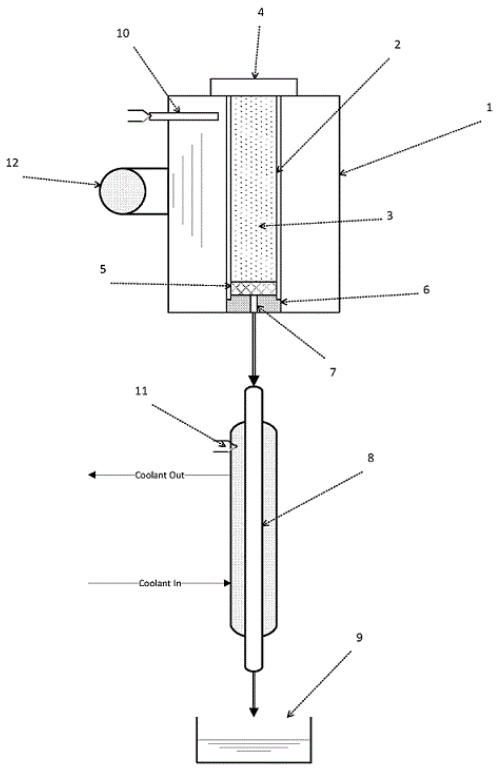

21: 2021/04321. 22: 2021/06/23. 43: 2023/10/04
51: A61K
71: ORPHANIX GMBH
72: NOVAK, Philipp, SELIGER, Christian, BAUER, Jochen
33: EP 31: 18208340.2 32: 2018-11-26
54: AQUEOUS PAEDIATRIC RETINOL FORMULATIONS
00: -
The present invention relates to an aqueous pharmaceutical composition for use as a paediatric medicament in the treatment or prevention of vitamin A deficiency or a vitamin A deficiency-associated disease.

21: 2021/04740. 22: 2021/07/07. 43: 2023/08/21
51: G01F
71: DINKELMAN, Gregory, David
72: DINKELMAN, Gregory, David
33: ZA 31: 2019/03026 32: 2019-05-15
33: ZA 31: 2019/04982 32: 2019-07-30
54: BI-DIRECTIONAL VOLUME PROVING SYSTEM
00: -
An ultra-compact bi-directional volume proving system (10) which is configured to, in use, prove an on board master meter for accuracy while the same on board master meter is used to prove the base volume of a larger bore prover (16), the system further including a bypass valve arrangement (36) for directing flow out of the prover loop pipe section (18) to allow the prover loop valve arrangement (34) to rotate for directing flow into a reverse direction through the prover loop pipe section (18) before the bypass valve arrangement (36) restore flow through the prover loop pipe section (18), and configured to repeat this for the time period fluid flows between a defined section of the larger bore prover (16).

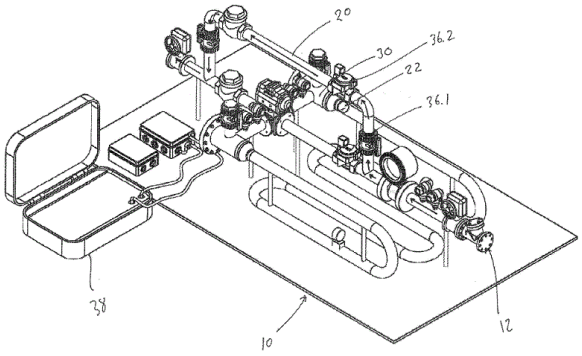

21: 2021/04862. 22: 2021/07/12. 43: 2023/09/18
51: B64D
71: ARROWTEC GMBH
72: BENNER, Josua
33: EP 31: 19151263.1 32: 2019-01-10
54: AUTOMATIC AERIAL SHIPPING SYSTEM
00: -
The invention relates to an automatic payload shipment system (1) for an unmanned aerial vehicle (UAV, 3) comprising: a) an unmanned aerial vehicle (UAV, 3), b) at least one payload container (2) being configured to be automatically releasably attachable to the unmanned aerial vehicle (3), wherein the payload container (2) has a container wall (22) enclosing a container volume (22c) for goods (21) or a person, and wherein the container wall (22) comprises an energy storage (10) for providing the unmanned aerial vehicle with energy, c) a landing platform (4) for the unmanned aerial vehicle (3), the landing platform (4) comprising an elevated landing area (41) accessible by the unmanned aerial vehicle (3) from the air, a support post (8) supporting the landing area (41), the support post (8) extending upwards from the ground (101) for providing an elevation for the landing area (41), a transport system (6) for automatically transporting the payload

container (2) from the landing area (41) to a terminal position (71) at a terminal (7) comprised by the post (8), wherein the terminal (7) is arranged such in the support post (8) that a person on the ground (101) can access the payload container (2) in the terminal positon (71) from ground level (101). The invention further relates to a method for automatic and autonomous shipping of payloads with the system (1).

21: 2021/05101. 22: 2021/07/20. 43: 2023/08/01
51: A61K A61P
71: UNIVERSITE DE STRASBOURG, INSERM (INSTITUT NATIONAL DE LA SANTÉ ET DE LA RECHERCHE MÉDICALE)
72: MARION, Vincent
33: EP 31: 18306794.1 32: 2018-12-21
54: PEPTIDES FOR TREATMENT AND PREVENTION OF DIABETES AND ASSOCIATED DISORDERS
00: -
The present invention relates to peptides for the treatment of diabetes and associated disorders.

21: 2021/05176. 22: 2021/07/22. 43: 2023/10/11
51: C07K; G01N
71: REGENERON PHARMACEUTICALS, INC.
72: XU, Xiaobin
33: US 31: 62/798,750 32: 2019-01-30
54: METHOD OF CHARACTERIZATION OF VISIBLE AND/OR SUB-VISIBLE PARTICLES IN BIOLOGICS
00: -
A method for characterizing or quantifying one or more proteins in visible and/or sub-visible particles formed in a sample by detecting the at least one visible or sub-visible particle in the sample, isolating and capturing the at least one visible or sub-visible particle to identify a presence of a protein, and using a mass spectrometer to characterize the protein.

21: 2021/05236. 22: 2021/07/23. 43: 2023/09/18
51: A61K; A61P
71: LABORATORIOS SALVAT, S.A.
72: TERRAZ MENDOZA, Maria Mar, SANAGUSTÍN AQUILUÉ, Javier, TÉLLEZ MOLINA, Adolfo, DELGADO GAÑÁN, María Isabel
33: EP 31: 19382120.4 32: 2019-02-19
54: SINGLE-DOSE PACKAGED CLOTRIMAZOLE LIQUID COMPOSITION
00: -
It relates to a single-dose packaging unit which is a blow-fill-seal (BFS) container which comprises a sterile pharmaceutical or veterinary liquid composition which is a solution, wherein a) the composition comprises a therapeutically effective amount of clotrimazole or a pharmaceutically or veterinary acceptable salt thereof, together with one or more pharmaceutically or veterinary acceptable excipients or carriers, and b) the container has a volume from 0.05 to 8 mL, with the condition that the water content of the composition is equal to or lower than 4% by weight with respect to the total composition weight. It also relates to a secondary packaging comprising one or more single-dose packaging units.

21: 2021/05314. 22: 2021/07/27. 43: 2023/08/17
51: G06Q
71: CATERPILLAR INC.
72: HENDRICKS, CARL F.B
33: US 31: 16/262,126 32: 2019-01-30
54: SYSTEM AND METHOD FOR MANAGING CARRYBACK THRESHOLDS IN SURFACE HAULAGE
00: -
A machine routing and planning system for mobile machines at a work site includes a plurality of haul trucks (40), at least one loading machine, and a controller (110). The controller (116) is configured to generate an initial material movement plan based upon an initial number of loading machines (11) and haul trucks (40) and the initial carryback threshold, and generate initial movement command signals to operate the loading machines (11) and haul trucks at the work site based upon the initial material movement plan. The controller (116) is further configured to generate a modified material movement plan based upon a modified number of loading machines (11) and haul trucks (40) and the modified carryback threshold, and generate modified movement command signals to operate the loading machines (11) and haul trucks at the work site based upon the modified material movement plan.

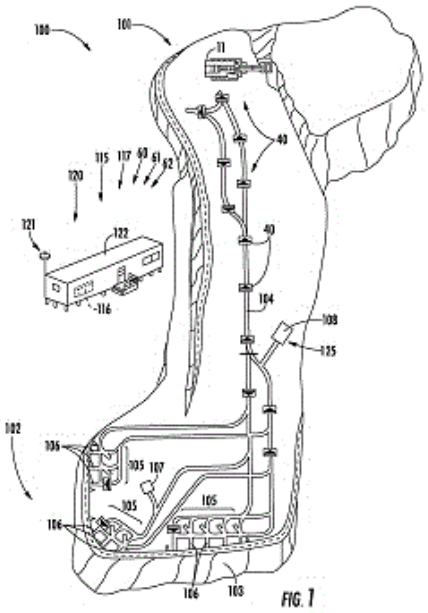

FIG. 1

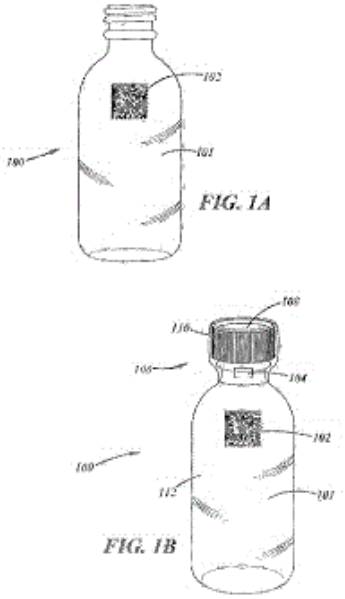

FIG. 1A

FIG. 1B

21: 2021/05582. 22: 2021/08/06. 43: 2023/08/16
51: G06K
71: OWENS-BROCKWAY GLASS CONTAINER INC.
72: SMITH, ROGER P, BRYANT, JESSICA R
33: US 31: 16/294,602 32: 2019-03-06
54: AUTHENTICATION OF A CONTAINER AND/OR PRODUCT PACKAGED THEREIN
00: -
A system and method for use in authenticating one or both of a container (101) and a product (112) packaged therein. The method comprises obtaining images of each of two codes (102, 104) carried by a container system (100) comprising the container. The method further comprises determining, for each image, a contrast ratio between one or more elements of the code in the image and the background of the code. The method still further comprises determining the authenticity of one or both of the container and the product packaged therein based at least in part on the contrast ratios for each image, and therefore, each code.

21: 2021/05753. 22: 2021/08/04. 43: 2023/08/22
51: C07D
71: BASF SE
72: GEBHARDT, Joachim, VIERTELHAUS, Martin, CHIODO, Tiziana, RACK, Michael, KLAUBER, Eric, George, XU, Wen, GOETZ, Roland, VOGT, Florian, GOCKEL, Birgit, SOERGEL, Sebastian
33: EP 31: 19151447.0 32: 2019-01-11
54: CRYSTALLINE FORMS OF 1-(1,2-DIMETHYLPROPYL)-N-ETHYL-5-METHYL-N-PYRIDAZIN-4-YL-PYRAZOLE-4-CARBOXAMIDE
00: -
The present invention relates to a novel crystalline form of 1-(1,2-dimethylpropyl)- N-ethyl-5-methyl-N-pyridazin-4-yl-pyrazole-4-carboxamide recently assigned the common name dimpropyridaz. The invention also relates to the use of the crystalline form B for combating invertebrate pests and to formulations for plant protection which contain the crystalline form B of 1-(1,2-dimethylpropyl)-N-ethyl-5-methyl-N-pyridazin-4- yl-pyrazole-4-carboxamide. The crystalline form B according to the present invention can be identified by powder X-ray diffractometry on the basis of its powder X-ray diffraction diagram, hereinafter also termed powder X-ray diffraction pattern or PXRD pattern,of the polymorph form B recorded using Cu-Kα radiation (1.54178 Å) at 25°C displays the 3 following reflections, quoted as 2θ values: 20.69±0.10°, 24.15±0.10°and 30.52± 0.10°.In addition to these 3 reflections, the polymorph B of the present invention may display in such a PXRD pattern one or more, in particular at least 2, often at least 4, in particular at least 6 or at least 8 reflections and especially all of

the reflections quoted hereinafter as 2θ values:7.99±0.10°, 10.07±0.10°, 12.38±0.10°,15.31±0.10°, 15.97±0.10°, 16.50±0.10°, 18.03±0.10°,19.29±0.10°, 20.22±.0.10°, 20.96± 0.10°, 23.40±0.10°, 23.70±0.10°,26.09±0.10°, 27.26±0.10°and 32.91±0.10°.

21: 2021/05927. 22: 2021/08/18. 43: 2023/08/22
51: G10L
71: FRAUNHOFER-GESELLSCHAFT ZUR FÖRDERUNG DER ANGEWANDTEN FORSCHUNG E.V.
72: KÜCH, Fabian, THIERGART, Oliver, FUCHS, Guillaume, DÖHLA, Stefan, BOUTHÉON, Alexandre, HERRE, Jürgen, BAYER, Stefan
33: EP 31: 19152911.4 32: 2019-01-21
54: APPARATUS AND METHOD FOR ENCODING A SPATIAL AUDIO REPRESENTATION OR APPARATUS AND METHOD FOR DECODING AN ENCODED AUDIO SIGNAL USING TRANSPORT METADATA AND RELATED COMPUTER PROGRAMS
00: -
An apparatus for encoding a spatial audio representation representing an audio scene to obtain an encoded audio signal, comprises: a transport representation generator (600) for generating a transport representation (611) from the spatial audio representation, and for generating transport metadata (610) related to the generation of the transport representation (611) or indicating one or more directional properties of the transport representation (611); and an output interface (640) for generating the encoded audio signal, the encoded audio signal comprising information on the transport representation (611), and information on the transport metadata (610).

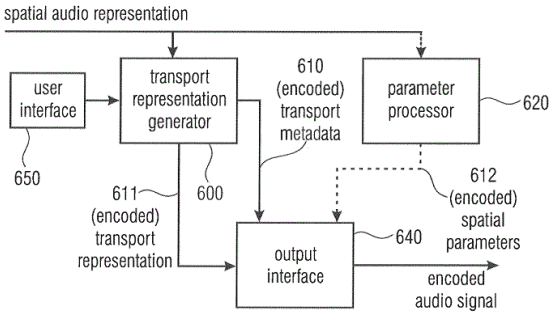

21: 2021/06516. 22: 2021/09/06. 43: 2023/08/17
51: C12N; A61K
71: THE TRUSTEES OF COLUMBIA UNIVERSITY IN THE CITY OF NEW YORK
72: STERNBERG, SAMUEL HENRY, KLOMPE, SANNE EVELINE, VO, PHUC HONG
33: US 31: 62/822,544 32: 2019-03-22
33: US 31: 62/845,218 32: 2019-05-08
33: US 31: 62/855,814 32: 2019-05-31
33: US 31: 62/902,171 32: 2019-09-18
33: US 31: 62/866,270 32: 2019-06-25
33: US 31: 62/884,600 32: 2019-08-08
33: US 31: 62/815,187 32: 2019-03-07
33: US 31: 62/873,455 32: 2019-07-12
33: US 31: 62/875,772 32: 2019-07-18
54: RNA-GUIDED DNA INTEGRATION USING TN7-LIKE TRANSPOSONS
00: -
In certain embodiments, the present systems and methods use Tn7-like transposons that encode CRISPR-Cas systems for programmable, RNA-guided DNA integration. For example, the CRISPR-Cas machinery directs the Tn7 transposon-associated proteins to integrate DNA downstream of a target site (e.g., a genomic target site) recognized by a guide RNA (gRNA).

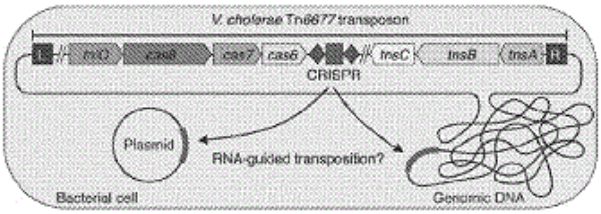

21: 2021/06806. 22: 2021/09/14. 43: 2023/08/10
51: A01D; E02B
71: LÄNNEN MCE OY
72: MIKKOLA, TONI, HEINO, JYRKI
33: FI 31: 20190024 32: 2019-04-05
54: METHOD AND APPARATUS FOR REMOVING PLANTS OR OTHER MATERIAL EXISTING IN WATER
00: -
A method for removing plants (6) or other material existing in water by means of a collector head connected to rest on a work machine moving on land and/or in a water system, whereby the collector head is moved in the method in water in the plant layer, and the collected plants (6) are transferred by means of a pump (13) and transfer pipes (3) included in the collector head either onto land or to a cargo area floating on water, such as a barge. By

means of at least two feeder drums (14) placed in the collector head and rotatable on their own shafts (11), water plants are shredded and led in the method from between said feeder drums (14) onto a pump (13) located behind said feeder drums, whereby said drums make use of conveyor/shredder members (8) located one over the other at a distance from each other, at least the outermost tips of which are directed forward in the direction of rotation

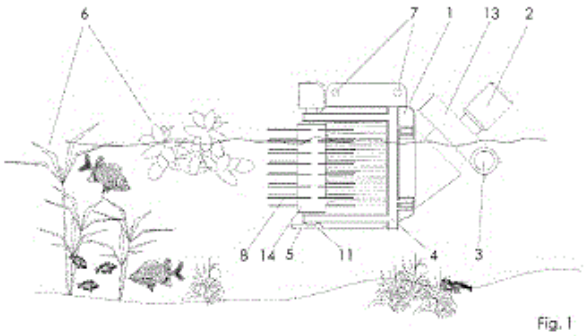

Fig. 1

21: 2021/06809. 22: 2021/09/14. 43: 2023/08/10
51: A61K; A61P
71: CERECIN INC.
72: HENDERSON, SAMUEL T, BOIVIN, TARYN, WALKER, JUDITH
33: US 31: 62/837,136 32: 2019-04-22
33: US 31: 62/813,448 32: 2019-03-04
54: MEDIUM CHAIN TRIGLYCERIDE FORMULATIONS WITH IMPROVED BIOAVAILIBLITY AND METHODS RELATED THERETO
00: -
The invention relates compositions of medium chain triglycerides (MCTs), and to methods for treatment with such compositions to treat conditions associated with reduced neuronal metabolism, for example Alzheimer's disease.

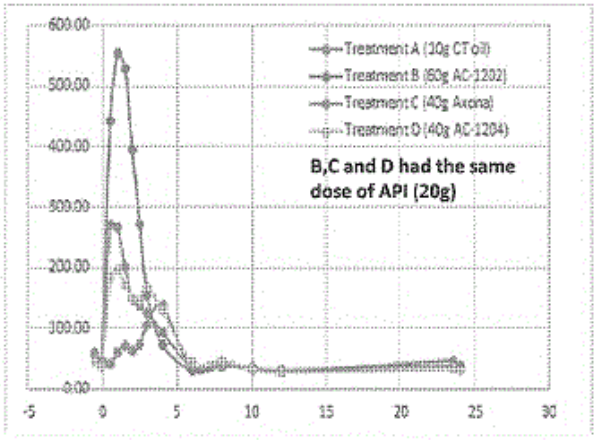

21: 2021/06810. 22: 2021/09/14. 43: 2023/08/10
51: C10L
71: OMNIS ADVANCED TECHNOLOGIES (HK) LTD.
72: SWENSEN, JAMES S, GRUNDER, DOUGLAS E, HODSON, SIMON K
33: US 31: 62/807,655 32: 2019-02-19
33: US 31: 16/795,345 32: 2020-02-19
54: THERMAL FRACTURE AND MICROCARBON SEPARATION OF COAL PARTICLES
00: -
A process for fracturing and devolatilizing coal particles rapidly exposes coal particles to a high temperature, oxygen-depleted work zone for a sufficient time period to cause volatile matter within the coal particles to vaporize and fracture the coal particles. The work zone has a temperature in the range from 600°C to 2000°C. The coal particles are exposed to the high temperature, oxygen-depleted work zone for a time period less than 1 seconds, and preferably less than 0.3 second. The vaporized volatile matter is condensed and recovered as microcarbon particles.

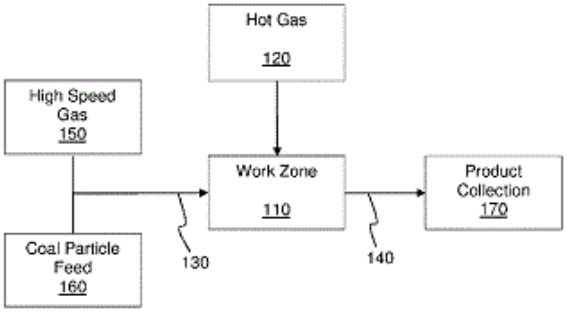

21: 2021/06878. 22: 2021/09/17. 43: 2023/08/10

51: F15B; E02F
71: CATERPILLAR INC.
72: FERRAZ, JOHN JR, JACKSON, MICHAEL THOMAS, O'NEILL, WILLIAM NORBERT
33: US 31: 16/357,459 32: 2019-03-19
54: REGENERATION VALVE FOR A HYDRAULIC CIRCUIT
00: -
A regeneration valve (70) includes a housing (72) defining a first port (74), a second port (75), a third port (76), and a chamber fluidly communicating with the first, second, and third ports (74, 75, 76). The chamber has a valve element (80) movable between a first position, in which the second port (75) fluidly communicates with the first port (74), and a second position, in which the second port (75) fluidly communicates with the third port (76). A resilient member (82) biases the valve element (80) towards the first position. In operation, a flow restrictor element (98) moves between the first port (74) and the second port (75) for restricting fluid flow from the second port (75) to the first port (74). At a predetermined fluid flow rate from the second port (75) to the first port (74), if a supply pressure of fluid at the actuation chamber (87) exceeds the bias of the resilient member (82), the valve element (80) moves to the second position for fluidly communicating the second and third ports (74, 75, 76).

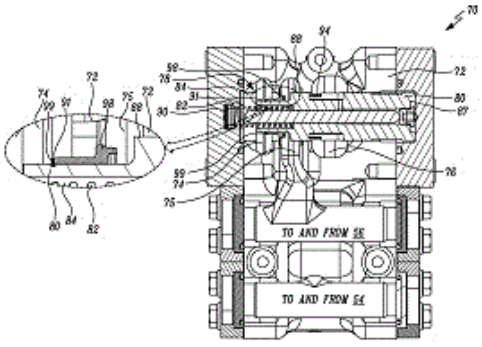

21: 2021/06900. 22: 2021/09/17. 43: 2023/08/10
51: F04D; F24F
71: PEAKVENT AS
72: GULLIKSEN, MORTEN
33: NO 31: 20190246 32: 2019-02-22
33: NO 31: 20190522 32: 2019-04-17
54: DUAL MODE IMPELLER ASSEMBLY AND A VENTILATION UNIT
00: -
A dual mode impeller assembly and ventilation device and a system, is provided, comprising one or more of a unit casing, a compact rotating heat exchange unit, a dual mode impeller, and a filter unit, and a system for monitoring and control of such ventilation device.

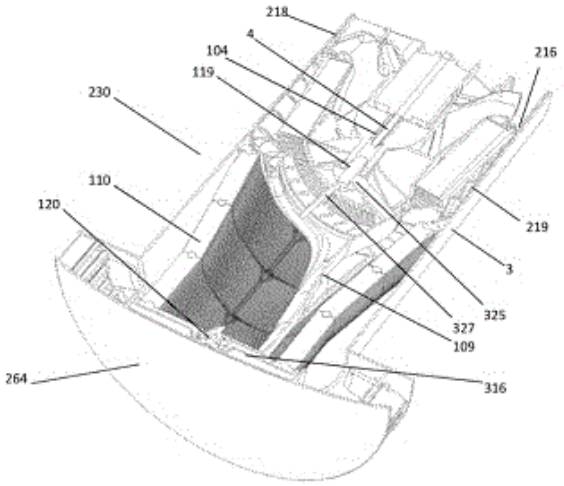

21: 2021/06901. 22: 2021/09/17. 43: 2023/08/10
51: E21B
71: FRAUNHOFER-GESELLSCHAFT ZUR FÖRDERUNG DER ANGEWANDTEN FORSCHUNG E.V., HERRENKNECHT AG
72: KEUSGEN, WILHELM, SCHMIEDER, MATHIS, WEBER, FELIX, FREY, ALEXANDER, SENG, FREDERIC
33: EP 31: 19164653.8 32: 2019-03-22
54: DATA COMMUNICATION IN THE MICROWAVE RANGE USING ELECTRICALLY CONDUCTIVE ELEMENTS IN A CONSTRUCTION MACHINE
00: -
A coupling element connectable to a string of one or more pipes, for example, a drill string of one or more pipes or drill pipes is provided. The coupling element is configured to excite, responsive to a data signal fed to the coupling element, an electromagnetic wave in the string. The coupling element comprises a feed portion at a first end of the coupling element, the feed portion to receive the data signal, a first electrically conductive portion extending from the feed portion towards a second end of the coupling element, the second end to be connected to the string for forming an electrically conductive connection between the first electrically conductive

portion and the string, and a second electrically conductive portion extending from the feed portion towards the second end of the coupling element. The first and second electrically conductive portions are arranged so as to define a waveguide. The waveguide expands in a direction from the first end towards the second end.

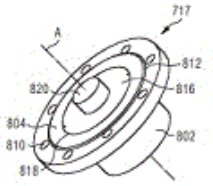

Fig. 8(a)

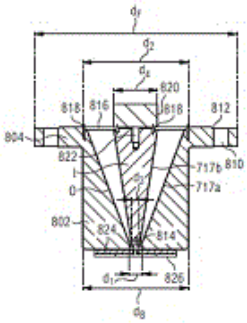

Fig. 8(b)

21: 2021/06907. 22: 2021/09/17. 43: 2023/08/10
51: C22C; C21D
71: JFE STEEL CORPORATION
72: MATSUI, RYOJI, ARATANI, MASATOSHI, KONDOU, TOMONORI
33: JP 31: 2019-048652 32: 2019-03-15

54: ELECTRIC-RESISTANCE-WELDED STEEL PIPE OR TUBE FOR HOLLOW STABILIZER AND METHOD OF MANUFACTURING SAME

00: -

Provided is an electric-resistance-welded steel pipe or tube for hollow stabilizer excellent in corrosion fatigue resistance having: a chemical composition containing, in mass%, C: 0.15% or more and less than 0.20%, Si: 0.1% or more and 1.0% or less, Mn: 0.1% or more and 2.0% or less, P: 0.1% or less, S: 0.01% or less, Al: 0.01% or more and 0.10% or less, Ti: more than 0.05% and 0.1% or less, B: 0.0005% or more and 0.005% or less, Ca: 0.0001% or more and 0.0050% or less, and N: 0.0050% or less, with the balance being Fe and inevitable impurities; and a microstructure containing TiS and MnS particles which each have a particle size of 10mm or more, the TiS and MnS particles having a cleanliness of 0% or more and 0.1% or less as measured by a point counting method according to JIS G 0555.

21: 2021/06908. 22: 2021/09/17. 43: 2023/08/10
51: H04N
71: BEIJING BYTEDANCE NETWORK TECHNOLOGY CO., LTD., BYTEDANCE INC.
72: ZHANG, LI, ZHANG, KAI, LIU, HONGBIN, WANG, YUE
33: CN 31: PCT/CN2019/079395 32: 2019-03-24

54: NONLINEAR ADAPTIVE LOOP FILTERING IN VIDEO PROCESSING

00: -

Devices, systems and methods for video processing are described. In an exemplary aspect, a method for video processing includes encoding a video unit of a video as an encoded video unit; generating reconstruction samples from the encoded video unit; performing a clipping operation on the reconstruction samples, wherein a clipping parameter used in the clipping operation is a function of a clipping index and a bit-depth of the reconstruction samples or a bit-depth of samples of the video unit; applying a non-linear adaptive loop filter to an output of the clipping operation; and generating a coded representation of the video using the encoded video unit.

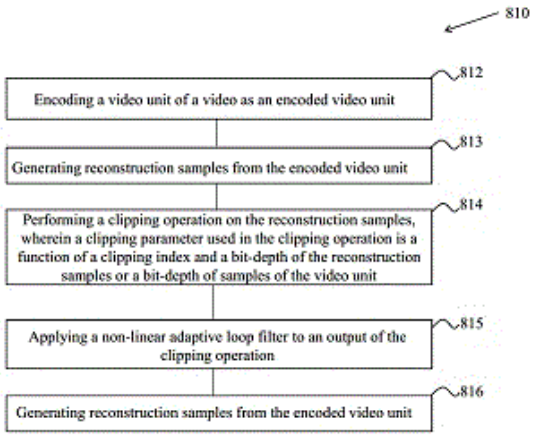

21: 2021/06909. 22: 2021/09/17. 43: 2023/08/10
51: D01F; C08B; D01D
71: TREETOTEXTILE AB
72: HAGSTRÖM, BENGT, KÖHNKE, TOBIAS, ENGSTRÖM, JONAS
33: SE 31: 1950223-6 32: 2019-02-21

54: A PROCESS AND A SPINNING LINE UNIT FOR WET SPINNING OF CELLULOSE FIBERS FROM AN ALKALINE SPIN BATH

00: -

A process for forming a fiber tow, involves a wet spinning procedure comprising the steps of: dissolving cellulose pulp in an alkaline aqueous solvent to form a cellulose spin dope composition, spinning the cellulose spin dope composition in a coagulation bath having a p H of more than 7.0, preferably a pH of at least 10, to produce a fiber tow, and passing the produced fiber tow through a sequence of consecutive stretching and washing steps in which the formed fiber tow is washed with a washing liquid by a counter-current flow washing procedure.

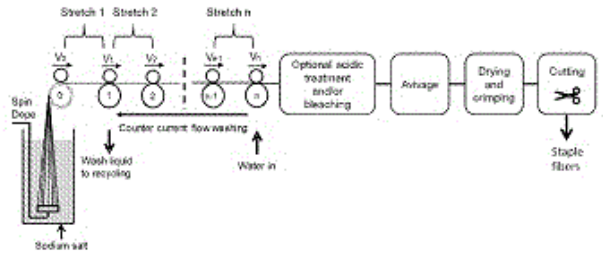

21: 2021/06910. 22: 2021/09/17. 43: 2023/08/10
51: H04M
71: SAMSUNG ELECTRONICS CO., LTD.
72: BAEK, SEUNGCHUL, LEE, SUMAN, LA, HYOSUNG, CHOI, JONGCHUL
33: KR 31: 10-2019-0018848 32: 2019-02-18

54: ELECTRONIC DEVICE COMPRISING WIRING MEMBER FIXING STRUCTURE

00: -

An electronic device comprises: a hinge structure which is arranged in an internal space of a hinge cover and includes a first hinge plate having a first opening and a second hinge plate having a second opening; a first housing connected to the first hinge plate; a second housing connected to the second hinge plate; a flexible display arranged to be supported by the first housing and the second housing; and a wiring member which electrically connects a first electrical structure of the first housing to a second electrical structure of the second housing through the internal space of the hinge cover, wherein the wiring member comprises: a bendable portion; a first fixing portion which is disposed on the first opening of the first hinge plate from the bendable portion so as to be exposable; a second fixing portion which is disposed on the second opening of the second hinge plate from the bendable portion so as to be exposable; at least one first reinforcing member which is fixed on the first fixing portion and is arranged to be supported by the first hinge plate between the first hinge plate and the first housing; and at least one second reinforcing member which is fixed on the second fixing portion and is arranged to be supported by the second hinge plate between the second hinge plate and the second housing.

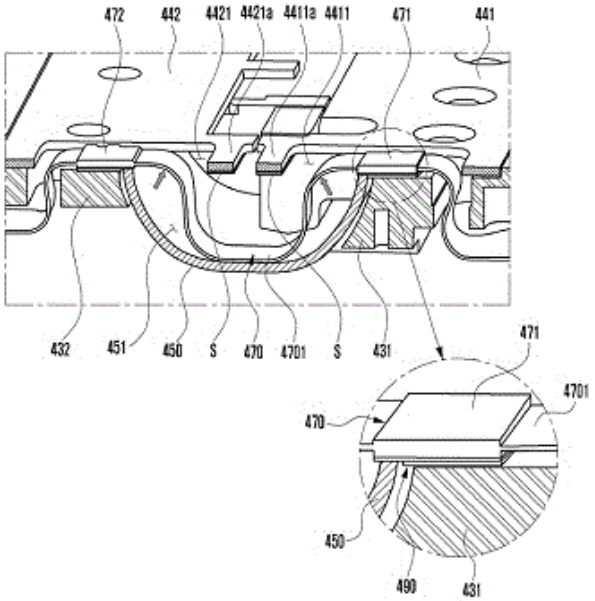

21: 2021/06911. 22: 2021/09/17. 43: 2023/08/10
51: G06F
71: SAMSUNG ELECTRONICS CO., LTD.
72: LEE, SUNGJUN, JUNG, BYOUNGHO, PARK, SANGIL, SONG, KWONHO, CHAE, ILJOO, KIM, KIWON, KIM, MOOYOUNG
33: KR 31: 10-2019-0019492 32: 2019-02-19

54: ELECTRONIC DEVICE FOR REDUCING OCCURRENCE OF UNINTENDED USER INPUT AND OPERATION METHOD FOR THE SAME

00: -

In an electronic device and a method of operating an electronic device according to various embodiments, the electronic device may include: a foldable housing, including a hinge, a first housing, and a second housing, the second housing; a display including a touch controller configured to control a receiving function of an input on the display; a processor; and a memory, wherein the memory may store instructions that, when executed, cause the

processor to control the electronic device to: detect the occurrence of changing an angle between the first housing and the second housing; receive a touch interrupt produced based on an input on the display; identify characteristics of the input in response to detecting the change in the angle; and determine whether to cancel the touch event corresponding to the input based on the characteristics of the input.

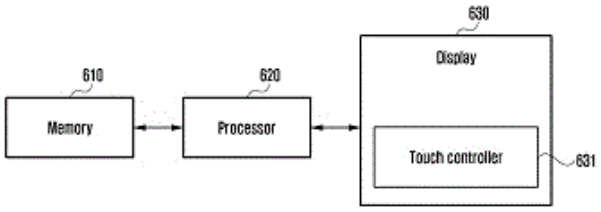

21: 2021/06913. 22: 2021/09/17. 43: 2023/08/10
51: B01D; F24F
71: PEAKVENT AS
72: GULLIKSEN, MORTEN
33: NO 31: 20190246 32: 2019-02-22
33: NO 31: 20190732 32: 2019-06-14
33: NO 31: 20190522 32: 2019-04-17
33: NO 31: 20191358 32: 2019-11-15
54: AIR FILTER DEVICE
00: -
Air filter device comprising: one or more pleated air filters where the pleated air filters are cylindrical and designed according to the relation $Gu=f_hP_r,/(2r_o\varepsilon^{0.25})>0.8$; and a motor for rotating the pleated air filters, wherein $\rho_r=(r_o-r_i)/\rho_s$; r_o=outer radius of the cylindrical pleated filter; f_h= height of the cylindrical filter; r_i=inner radius of the cylindrical pleated filter; p_s= distance between two adjacent pleat tops on the inner radius, ε=ASHRAE efficiency.

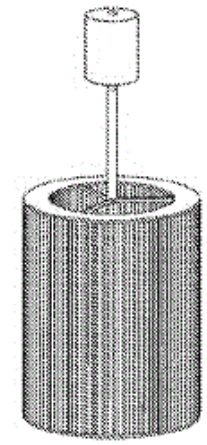

21: 2021/06914. 22: 2021/09/17. 43: 2023/08/10
51: A61K; A61M; C12N; A61P
71: OM PHARMA SA
72: BAUER, JACQUES, PASQUALI, CHRISTIAN
33: EP 31: 19162912.0 32: 2019-03-14
54: PROCESS FOR MAKING STABLE BACTERIAL EXTRACTS AND THEIR USE AS PHARMACEUTICALS
00: -
The present invention relates to novel stable bacterial extract preparations having substantial increased stability overtime, novel methods of preparation thereof, pharmaceutical formulations based on these novel stabilized bacterial extracts, as well as novel routes of administration and delivery devices for treating and/or preventing acute and chronic immunological disorders resulting from infections and/or inflammation and/or neoplasms and/or dysbiosis.

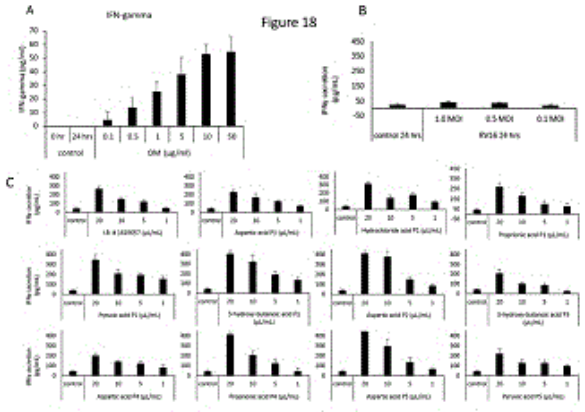

21: 2021/06977. 22: 2021/09/20. 43: 2023/08/10

51: H04B
71: VIASAT, INC.
72: MILLER, MARK, BUER, KENNETH
33: US 31: 62/145,810 32: 2015-04-10
33: US 31: 62/164,456 32: 2015-05-20
33: US 31: 62/298,911 32: 2016-02-23
33: US 31: 62/312,342 32: 2016-03-23
33: US 31: 62/314,921 32: 2016-03-29
33: US 31: 62/278,368 32: 2016-01-13
33: US 31: 62/145,804 32: 2015-04-10
54: SATELLITE FOR END-TO-END BEAMFORMING
00: -
A satellite for providing communications between access nodes and user terminals. The satellite comprises: a feeder-link antenna subsystem, including an array of cooperating feeder-link constituent transmit elements and an array of cooperating feeder-link constituent receive elements; a user-link antenna subsystem, including an array of cooperating user-link constituent transmit elements and an array of cooperating user-link constituent receive elements; forward-link transponders, each coupled between a respective one of the feeder-link constituent receive elements and a respective one of the user-link constituent transmit elements; and return-link transponders, each coupled between a respective one of the user-link constituent receive elements and a respective one of the feeder-link constituent transmit elements.

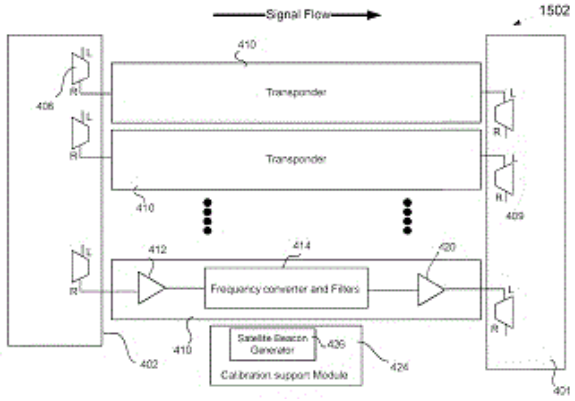

21: 2021/06978. 22: 2021/09/20. 43: 2023/08/10
51: H04B
71: VIASAT, INC.
72: MILLER, MARK, BUER, KENNETH
33: US 31: 62/145,810 32: 2015-04-10
33: US 31: 62/278,368 32: 2016-01-13
33: US 31: 62/312,342 32: 2016-03-23
33: US 31: 62/164,456 32: 2015-05-20
33: US 31: 62/298,911 32: 2016-02-23
33: US 31: 62/314,921 32: 2016-03-29
33: US 31: 62/145,804 32: 2015-04-10
54: SATELLITE FOR END-TO-END BEAMFORMING
00: -
A satellite comprising: receive antenna elements, each having a receive component beam antenna pattern, such that at least one of the receive component beam antenna patterns overlaps with at least one other of the receive component beam antenna patterns, the receive antenna elements operable at a same receive frequency and a same receive polarization; and transmit antenna elements, each having a transmit component beam antenna pattern, such that at least one of the transmit component beam antenna patterns overlaps with at least one other of the transmit component beam antenna patterns, the transmit antenna elements operable at a same transmit frequency and a same transmit polarization. The satellite further comprises transponders, each having an input coupled to an associated receive antenna element, and each having an output coupled to an associated transmit antenna element, such that there is a one-to-one relationship between each transponder, the associated receive antenna element, and the associated transmit antenna element.

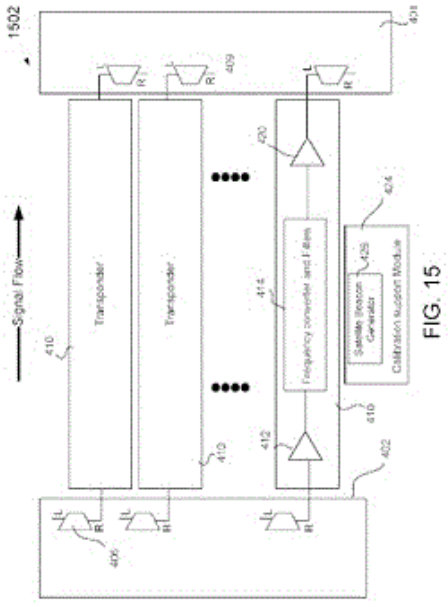

FIG. 15

21: 2021/07021. 22: 2021/09/21. 43: 2023/08/04

51: H04B
71: VIASAT, INC.
72: MILLER, MARK, BUER, KENNETH, CRONIN, CHRISTOPHER
33: US 31: 62.314,921 32: 2016-03-29
33: US 31: 62/145,810 32: 2015-04-10
33: US 31: 62/164,456 32: 2015-05-20
33: US 31: 62/298,911 32: 2016-02-23
33: US 31: 62/278,368 32: 2016-01-13
33: US 31: 62/312,342 32: 2016-03-23
33: US 31: 62/145,804 32: 2015-04-10
54: BEAMFORMER FOR END-TO-END BEAMFORMING
00: -
A method of providing a communication service to user terminals distributed over multiple forward user beam coverage areas via an end-to-end relay comprising multiple forward receive/transmit signal paths. The method comprises obtaining multiple forward beam signals including forward user data streams for transmission to the user terminals grouped by the multiple forward user beam coverage areas; and identifying a forward beam weight matrix for end-to-end beamforming of transmissions from access nodes at geographically distributed locations to the multiple forward user beam coverage areas via the end-to-end relay, wherein the forward beam weight matrix accounts for wireless signal uplink paths up to the end-to-end relay, the multiple forward receive/transmit signal paths through the end-to-end relay, and wireless signal downlink paths down from the end-to-end relay. The method further comprises the steps of generating access node-specific forward signals for the access nodes, each of the access node-specific forward signals comprising a composite of forward beam signals weighted by forward beamforming weights of the forward beam weight matrix; and distributing the access node-specific forward signals to the access nodes with forward synchronization information for compensating for path delays and phase shifts between the access nodes and the end-to-end relay, wherein the access node-specific forward signals are for transmission to the end-to-end relay, for relay to the multiple forward user beam coverage areas, by the access nodes at time-domain offsets based on the forward synchronization information in forward uplink signals which superpose to create composite input forward signals.

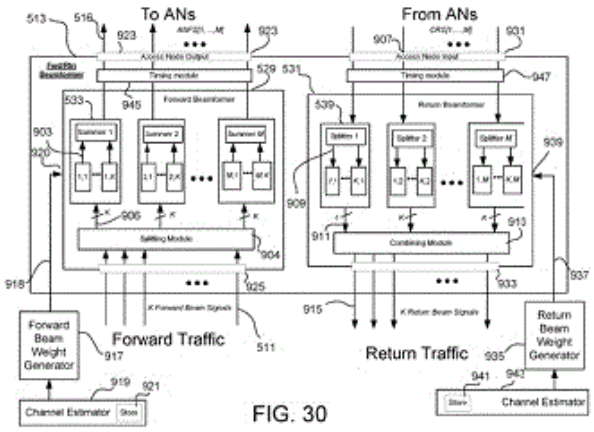

FIG. 30

21: 2021/07022. 22: 2021/09/21. 43: 2023/08/04
51: H04B
71: VIASAT, INC.
72: MILLER, MARK, BUER, KENNETH, CRONIN, CHRISTOPHER
33: US 31: 62.314,921 32: 2016-03-29
33: US 31: 62/145,810 32: 2015-04-10
33: US 31: 62/298,911 32: 2016-02-23
33: US 31: 62/278,368 32: 2016-01-13
33: US 31: 62/312,342 32: 2016-03-23
33: US 31: 62/145,804 32: 2015-04-10
33: US 31: 62/164,456 32: 2015-05-20
54: ACCESS NODE FOR END-TO-END BEAMFORMING
00: -
A method of communication at an access node of a communication system comprising access nodes at geographically distributed locations providing a communication service to user terminals distributed over multiple forward user beam coverage areas via an end-to-end relay comprising multiple forward receive/transmit signal paths. The method comprises obtaining an access node-specific forward signal for transmission via the end-to-end relay to the user terminals grouped by the multiple forward user beam coverage areas, the access node-specific forward signal comprising a composite of forward beam signals corresponding to a plurality of the multiple forward user beam coverage areas, the forward beam signals weighted by respective beam weights of a beam weight vector associated with the access node; and identifying forward signal transmit timing information indicating transmission timing for the access node-specific forward signal. The method further comprises the steps of transmitting a forward uplink signal comprising the

access node-specific forward signal and an access node beacon signal to the end-to-end relay, the access node-specific forward signal having the forward signal transmit timing information synchronized to corresponding transmit timing information in the access node beacon signal; receiving signaling from the end-to-end relay comprising a relay beacon signal and the access node beacon signal relayed from the end-to-end relay; and adjusting the forward uplink signal to time and phase align the relayed access node beacon signal with the received relay beacon signal.

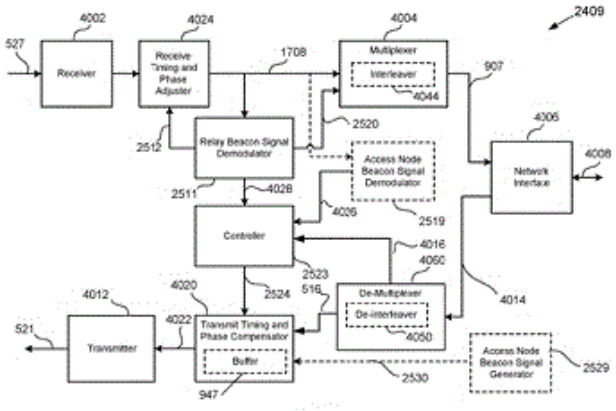

21: 2021/07043. 22: 2021/09/21. 43: 2023/08/04
51: H04N
71: V-NOVA INTERNATIONAL LTD.
72: MEARDI, GUIDO
33: GB 31: 1903844.7 32: 2019-03-20
33: GB 31: 1904492.4 32: 2019-03-29
33: GB 31: 1904014.6 32: 2019-03-23
33: GB 31: 1905325.5 32: 2019-04-15

54: MODIFIED UPSAMPLING FOR VIDEO CODING TECHNOLOGY

00: -

A first level encoded stream is received and decoded to derive a first set of residuals. A first output video comprising an output of a base decoder applied to a base level encoded stream is received. The first set of residuals is combined with the first output video to generate a second output video. The second output video is up-sampled to generate an up-sampled second output video. The up-sampling comprises adding a value derived from an element in the first set of residuals from which a block in the up-sampled second output video was derived to the block in the up-sampled second output video. A second level encoded stream is received and decoded to derive a second set of residuals. The second set of residuals is combined with the up-sampled second output video to generate a reconstructed output video.

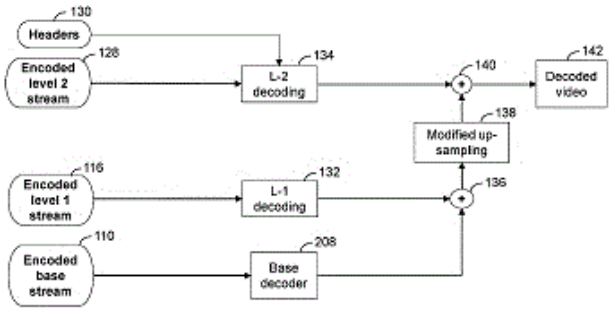

21: 2021/07046. 22: 2021/09/21. 43: 2023/08/04
51: A01N; A01P; C07C
71: CORTEVA AGRISCIENCE LLC
72: BUYSSE, ANN M, NUGENT, BENJAMIN M, GUSTAFSON, GARY D, MEYER, STACY T, LOY, BRIAN A, KISTER, JEREMY, GRUBER, JOSEPH M, JONES, DAVID M, AVILA-ADAME, CRUZ, WANG, WEIWEI, BABIJ, NICHOLAS R, PETKUS, JEFF
33: US 31: 62/852,074 32: 2019-05-23

54: FUNGICIDAL ARYL AMIDINES

00: -

This disclosure relates to aryl amidines of Formula I and their use as fungicides. One embodiment of the present disclosure is a use of a compound of Formula I, for protection of a plant against attack by a phytopathogenic organism or the treatment of a plant infested by a phytopathogenic organism, comprising the application of a compound of Formula I, or a composition comprising the compound to soil, a plant, a part of a plant, foliage, and/or roots.



Formula I

21: 2021/07047. 22: 2021/09/21. 43: 2023/08/03
51: A61P; C07K; A61K
71: XENCOR, INC.
72: RASHID, RUMANA, MUCHHAL, UMESH S, MOORE, GREGORY, NISTHAL, ALEX, CHU, SEUNG, LEE, SUNG-HYUNG, KIM, YOON KYUNG
33: US 31: 62/812,922 32: 2019-03-01
33: US 31: 62/929,687 32: 2019-11-01
54: HETERODIMERIC ANTIBODIES THAT BIND ENPP3 AND CD3
00: -
The present invention is directed to antibodies, including novel antigen binding domains and heterodimeric antibodies, that bind Ectonucleotide pyrophosphatase/phosphodiesterase family member 3 (ENPP3).

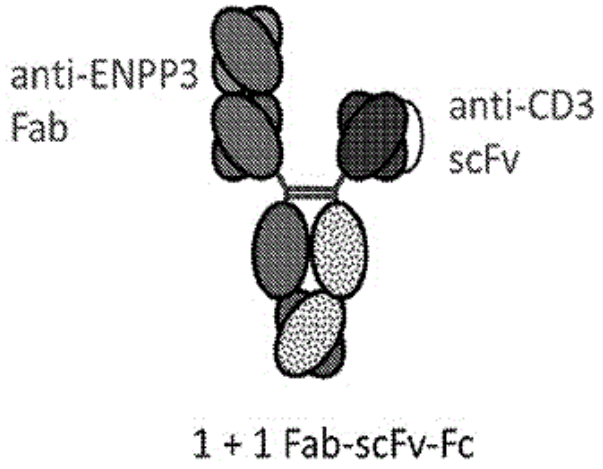

21: 2021/07074. 22: 2021/09/22. 43: 2023/08/03
51: F02M; B01D
71: CATERPILLAR INC.
72: FINN, TIMOTHY
33: US 31: 16/365,286 32: 2019-03-26
54: PRECLEANER SYSTEM
00: -
A precleaner system (200) for an air intake system (100). The precleaner system includes precleaners (210a, 210b, 210c) each having flow paths (224a, 224b, 224c) that induce a rotation to air flow and separate out particulate matter. The particulate matter is ejected from an outlet port (236a, 236b, 236c) in each of the flow paths and out of a dust ejector (240a, 240b, 240c). The precleaned air is collected into a plenum (260) from each of the precleaners. The precleaned air can flow from the plenum to a precleaner system outlet (280) and the precleaned air can be received by the air intake system. A cover (270) can be used to block air flow through one of the precleaners to tune the precleaner system to the desired airflow.

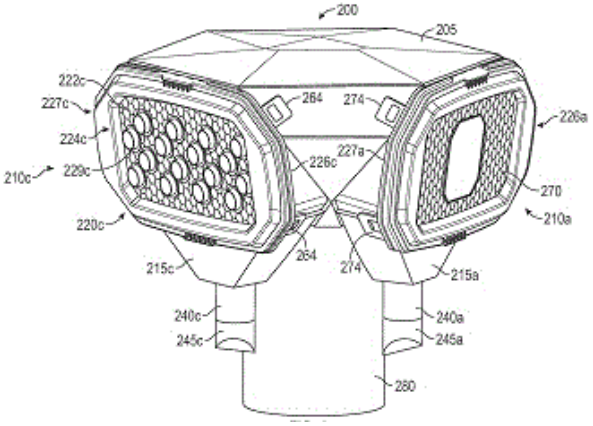

21: 2021/07090. 22: 2021/09/22. 43: 2023/08/03
51: C02F
71: BEIJING TANSI ENVIRONMENTAL PROTECTION TECHNOLOGY CO., LTD
72: YANG, ANMING, TIAN , SHENG
33: CN 31: 202110117407.2 32: 2021-01-28
54: FACILITY AND METHOD FOR ADVANCED NITROGEN REMOVAL FROM INDUSTRIAL WASTEWATER BY ANAMMOX
00: -
The present disclosure provides a facility and method for advanced nitrogen removal from industrial wastewater by anaerobic ammonium oxidation (anammox). The facility provided in the present disclosure includes a pre-inhibition zone, an anammox system, an O_1AO_2nitrogen removal zone and a single sludge sedimentation tank system. The pre-inhibition zone is provided with a first aeration system, an alkali adding system, an online pH measuring meter and an online ammonia nitrogen measuring meter. The anammox system is provided with a second aeration system and an immobilized filler layer. The O_1AO_2nitrogen removal zone includes a first aeration zone, an anoxic zone and a second aeration zone that are sequentially communicated with one another in series. The single sludge sedimentation tank system includes a sedimentation tank, and a sludge outlet and a water outlet that are formed in the bottom and the top of the sedimentation tank, respectively.

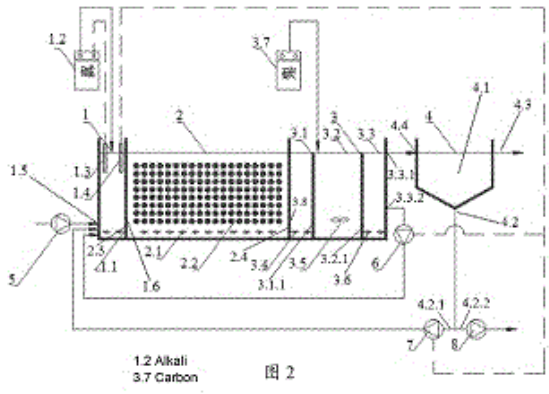

图 2

21: 2021/07137. 22: 2021/09/23. 43: 2023/08/03
51: B60R
71: CAMBRIDGE MOBILE TELEMATICS INC.
72: BALAKRISHNAN, HARI, BOWNE, BEN, GIROD, LEWIS DAVID, HICKS JR, JAMES E, MADDEN, SAMUEL ROSS, WELLMAN, KATHERINE
33: US 31: 16/451,193 32: 2019-06-25
33: US 31: 16/407,502 32: 2019-05-09
33: US 31: 62/823,811 32: 2019-03-26
54: SAFETY FOR VEHICLE USERS
00: -
Personal safety concerns for users of vehicles can be indicated, identified, communicated, analyzed, or acted on to make the users and other participants in the technology aware of the safety concerns and to reduce the risks to the users associated with the safety concerns. Personal safety concerns can be recognized based on safety concern triggers. Once recognized, the personal safety concerns can be reported to the users and other participants in the technology by safety alerts. The safety alert can prompt one or more telematics devices at the vehicle to capture, store, or transmit telematics data, including, for example, audio, image, or video data or combinations of them. The captured telematics data can be used to verify the safety alert and the safety concern and present the captured data to a third party participant to enable the third party participant to determine an appropriate response or action.

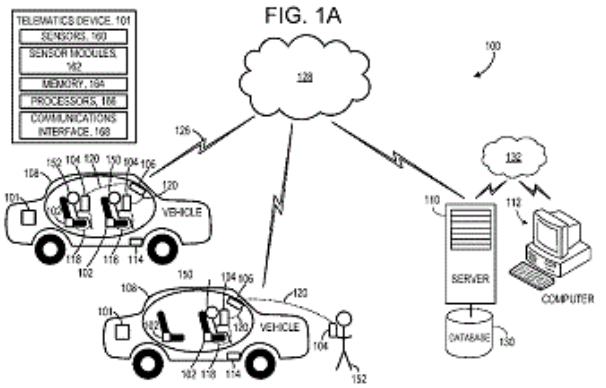

FIG. 1A

21: 2021/07140. 22: 2021/09/23. 43: 2023/08/03
51: E21B
71: OIL STATES INDUSTRIES (UK) LIMITED
72: MARTINS, MIGUEL FERNANDES, JOHNSTON, RICHARD
33: GB 31: 1906260.3 32: 2019-05-03
33: GB 31: 1906364.3 32: 2019-05-06
54: APPARATUS AND METHOD RELATING TO MANAGED PRESSURE DRILLING
00: -
An actuatable sealing mechanism (1030, 1034, 1038; 2030, 2034, 2038; 3007) for sealing a fluid channel (1024; 2024; 3013) provided between two co-axially arranged tubular members (1010 & 1100, 1200, 1300; 2010 & 2100, 2200, 2300; 3010, 3012) having a central longitudinal axis. The actuable sealing mechanism comprises an elastomeric seal (1209; 2209; 3015), an axially moveable actuating sleeve member (1400; 2400; 3020) and a radially moveable activating member (1060, 1064, 1068; 2060, 2064, 2068; 3025). The activating member is configured to be moveable in a radial direction in use to translate the actuatable sealing mechanism between an unsealed state and a sealed state. When it is in the unsealed state, the activating member does not move the actuating sleeve member sufficiently in a first axial direction to axially compress the elastomeric seal sufficiently to expand the elastomeric seal in a radial direction to seal the fluid channel.

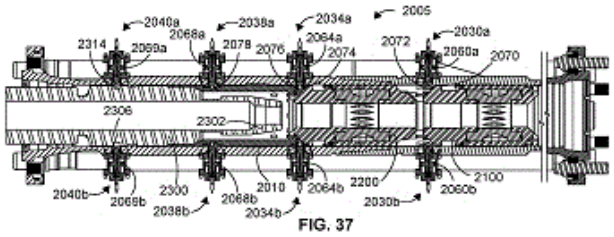

FIG. 37

21: 2021/07143. 22: 2021/09/23. 43: 2023/08/03
51: C12N
71: COMMONWEALTH SCIENTIFIC AND INDUSTRIAL RESEARCH ORGANISATION
72: ALLEN, ROBERT SILAS, GREGG, CHRISTINA MARIA, OKADA, SHOKO, MENON, AMRATHA, WARDEN, ANDREW CHARLES, TAYLOR, MATTHEW CRAIG, WOOD, CRAIG CHRISTOPHER
33: AU 31: 2019903818 32: 2019-10-10
33: AU 31: 2019900780 32: 2019-03-08
33: AU 31: 2020900689 32: 2020-03-05
54: EXPRESSION OF NITROGENASE POLYPEPTIDES IN PLANT CELLS
00: -
The present invention relates to methods and means for producing nitrogenase polypeptides in the mitochondria of plant cells.

21: 2021/07193. 22: 2021/09/27. 43: 2023/09/18
51: G01S
71: HENSOLDT SENSORS GMBH
72: HAIDE, Manuel
33: EP 31: 20 199 968.7 32: 2020-10-03
54: MIMO RADAR SYSTEM FOR AN AERIAL VEHICLE
00: -
A multiple-input multiple-output, MIMO, radar system for detecting an object in a vicinity of an aerial vehicle comprises a first transmitter patch (110), a second transmitter patch (120), and a third transmitter patch (130). Each transmitter patch (110, 120, 130) comprises, respectively, a first, second, and third plurality of transmitting antenna elements (115, 125, 135) configured to transmit, respectively, a first, second and third plurality of transmission signals (210, 220, 230). The MIMO radar system further comprises a plurality of receiving antenna elements (140), wherein each receiving antenna element (145) is configured to receive the transmitted transmission signals (215, 225, 235) after their reflection from the object. The MIMO radar system further comprises a signal forming module (160), configured to generate the transmission signals (210, 220, 230) and to provide the transmission signals (210, 220, 230) to their respective transmitting antenna elements (115, 125, 135).

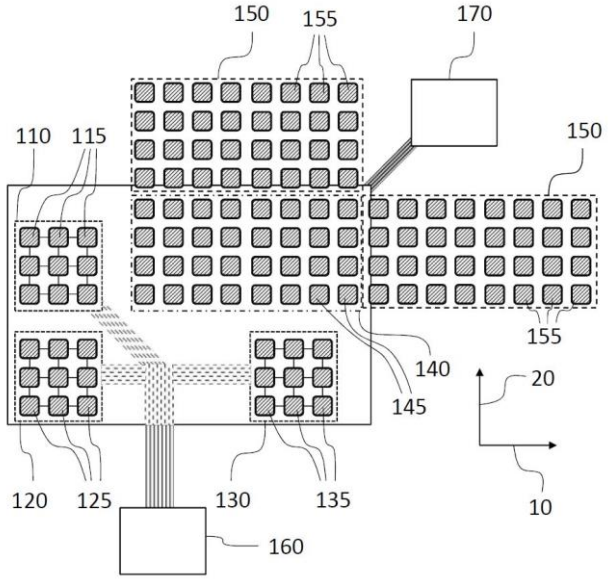

21: 2021/07233. 22: 2021/09/27. 43: 2023/08/07
51: B29C; B65D; B29L; B29K
71: SACMI COOPERATIVA MECCANICI IMOLA SOCIETÀ COOPERATIVA
72: PUCCI, FABRIZIO, PARRINELLO, FIORENZO
33: IT 31: 102019000005206 32: 2019-04-05
54: METHOD AND APPARATUS FOR PRODUCING A DISPENSING PART OF A CONTAINER, AND DISPENSING PART OF A CONTAINER
00: -
A method comprises in sequence the steps of: dispensing a continuous polymeric extrudate (8) in a molten state; separating from the continuous extrudate (8) a dose (14) substantially having the shape of a parallelepiped, the dose (14) having a separation surface (65) at which the dose (14) has been separated from the continuous extrudate (8), the dose (14) further having a face (22) adjacent to the separation surface (65); conveying the dose (14) towards a mould (11) comprising a first mould part (23) and a second mould part (24); shaping the dose (14) in the mould (11) by moving the first mould part (23) and the second mould part (24) one towards the other in a moulding direction (Y) arranged transversally to said face (22), thereby obtaining a

dispensing part (2; 102) of a container. The dispensing part (2; 102) comprises: an edge zone (3; 103) suitable for being joined to a container body; a neck (4; 104) surrounding a passage (50) through which a product contained in the container can be dispensed; a membrane (43; 143) which closes the passage (50), the passage (50) being intended to be opened after the shaping step, so that said product can flow out.

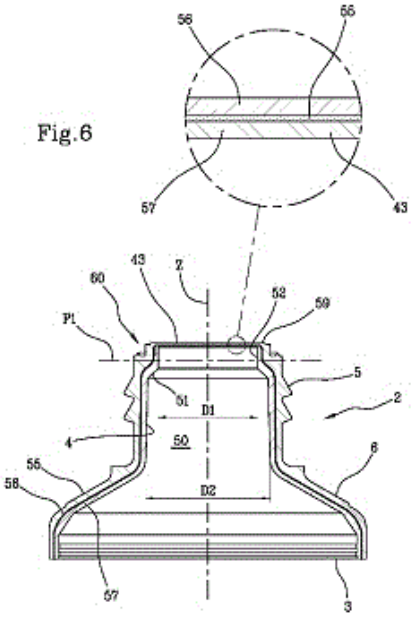

21: 2021/07235. 22: 2021/09/27. 43: 2023/08/07
51: A61K; A61P
71: ASCLEPIX THERAPEUTICS, INC.
72: PANDEY, NIRANJAN B
33: US 31: 62/824,017 32: 2019-03-26
54: COMPOSITIONS AND METHODS FOR TREATING OCULAR DISEASE
00: -
In various aspects and embodiments, the invention provides methods and pharmaceutical compositions for treating ocular disease, including ocular disease involving ocular vascular permeability or ocular inflammation. In various aspects and embodiments, the invention comprises administering about 1 μg to about 1 mg of collagen IV-derived biomimetic peptide or salt thereof to a patient by intraocular injection. Injections are provided at a frequency of from about monthly to about once every two years. In various embodiments, the methods and compositions provide for potent action and long duration of action, with infrequent intravitreal injections of a small volume.

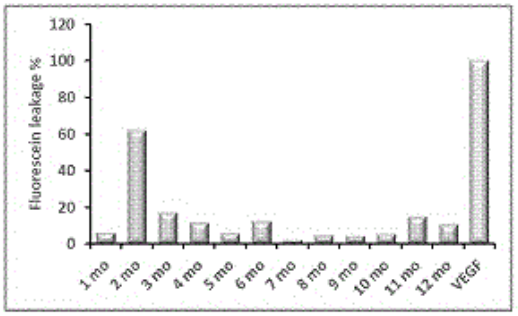

21: 2021/07294. 22: 2021/09/28. 43: 2023/08/07
51: H04N
71: BEIJING BYTEDANCE NETWORK TECHNOLOGY CO., LTD., BYTEDANCE INC.
72: LIU, HONGBIN, ZHANG, LI, ZHANG, KAI, XU, JIZHENG, WANG, YUE
33: CN 31: PCT/CN2019/080754 32: 2019-04-01
54: USING INTERPOLATION FILTERS FOR HISTORY BASED MOTION VECTOR PREDICTION
00: -
A method of video processing is provided to comprise: maintaining, prior to a conversion between a current video block of a video region and a coded representation of the video, at least one history-based motion vector prediction (HMVP) table, wherein the HMVP table includes one or more entries corresponding to motion information of one or more previously processed blocks; and performing the conversion using the at least one HMVP table; and wherein the motion information of each entry is configured to include interpolation filter information for the one or more previously processed blocks, wherein the interpolation filter information indicates interpolation filters used for interpolating prediction blocks of the one or more previously processed blocks.

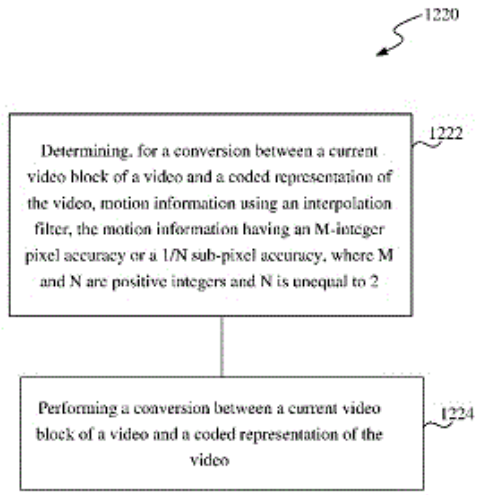

21: 2021/07295. 22: 2021/09/28. 43: 2023/08/07
51: H04N
71: BEIJING BYTEDANCE NETWORK TECHNOLOGY CO., LTD., BYTEDANCE INC.
72: DENG, ZHIPIN, ZHANG, LI, LIU, HONGBIN, ZHANG, KAI, XU, JIZHENG
33: CN 31: PCT/CN2019/083320 32: 2019-04-18
54: PARAMETER DERIVATION IN CROSS COMPONENT MODE
00: -
A method for visual media processing, comprising performing a conversion between a current chroma video block of visual media data and a bitstream representation of the current chroma video block, wherein, during the conversion, a chroma residual of the current chroma video block is scaled based on a scaling coefficient, wherein the scaling coefficient is derived at least based on luma samples located in predefined positions.

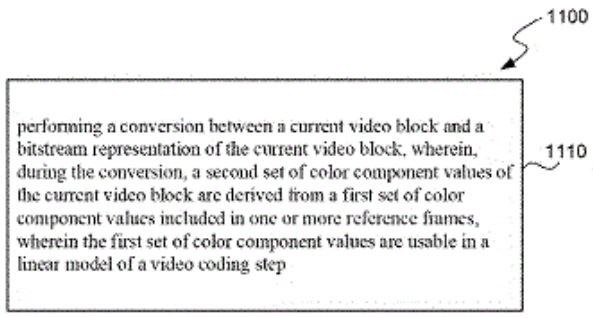

21: 2021/07297. 22: 2021/09/28. 43: 2023/08/07
51: C11D
71: UNILEVER GLOBAL IP LIMITED
72: SILVA, HÉLDER DANIEL PEIXOTO DA, PARKER, ANDREW PHILIP, JONES, CRAIG WARREN, MCKEE, ANTHONY
33: EP 31: 19170472.5 32: 2019-04-23
54: SURFACTANT SYSTEMS
00: -
The invention provides a surfactant system, for use in household detergent compositions, which is a mixture of: • (i) at least one sulfonate-functionalized alkyl polyglycoside preferably of general formula (I): R-0-$(G)_n$(D) in which: • R represents a straight or branched chain monovalent hydrocarbyl radical having from 6 to 22 carbon atoms; G represents a residue of a reducing saccharide, connected to R-O by means of an ethereal O-glycosidic bond; n represents a number from 1 to 10; and D represents a • -$CH_2CH(OH)CH_2$-SO_3M group connected to an oxygen atom of G, where M is selected from H or a monovalent cation selected from Na, K, or NH_4; • and • (ii) at least one ethoxylated fatty acid sorbitan ester with an average ethoxylation of 15-25 and preferably of general formula (II): Sorb-$(EO_{n1}R_1)(EO_{n2}R_2)(EO_{n3}R_3)(EO_{n4}R_4)$ in which: • Sorb represents a residue obtained by removing four hydroxyl H atoms from sorbitan; EO represents an ethyleneoxy group; R, R_2, $R_3$and $R_4$are each independently selected from H or a -C(O)Rs group in which Rs is selected from straight or branched chain monovalent hydrocarbyl radicals having from 8 to 22 carbon atoms and mixtures thereof (provided that at least one of $R_1$to $R_4$is -$C(O)R_s$); n_i, n_2, $n_3$and $n_4$each independently represent average values from 0 to 10; and the total [n_i+ n_2+ n_3+ n_4] has an average value from 15 to 25; • and preferably in which the weight ratio of (i):(ii) in the mixture ranges from 5:1 to 1:5.

21: 2021/07301. 22: 2021/09/28. 43: 2023/08/07
51: E02F
71: P. BERENDE HOLDING B.V., NIJHUIS ENGINEERING DRONTEN B.V.
72: BERENDE, PETRUS CORNELIS ADRIANUS MARIA, STEE, DANIEL P.J
33: NL 31: 2022762 32: 2019-03-19
54: VEHICLE COMPRISING A STABILIZER, AND STABILIZER FOR SUCH A VEHICLE
00: -
The present invention relates to a vehicle, comprising: - a chassis; and - a stabilizer comprising: a support frame that comprises a wheel support that

is configured to support at least one shaft and two wheels arranged on opposite sides relative to a longitudinal axis of said vehicle and defining a track width between said two wheels; a base supporting said support frame; and a suspension connecting said base relative to said chassis and configured to allow a free vertical displacement of one of the base and the chassis relative to the other over a restricted range. The invention further relates to a stabilizer of or for such a vehicle.

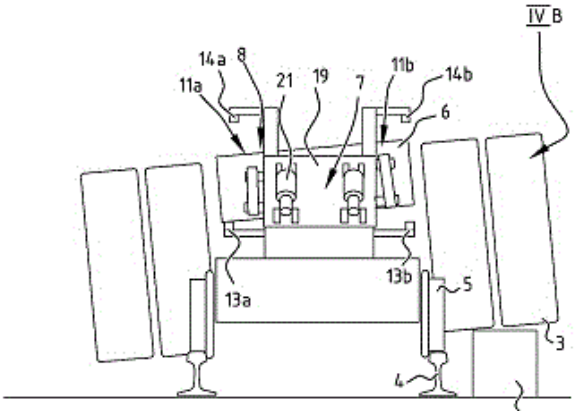

21: 2021/07323. 22: 2021/09/29. 43: 2023/08/02
51: B61C; B61H; H04B
71: Westinghouse Air Brake Technologies Corporation
72: WOLF, Charles L., HAAS, Carl L., HENNIGES, Benjamin, UEHLING, Mark
33: US 31: 63/085,458 32: 2020-09-30
54: MULTI-VEHICLE BRAKING SYSTEM
00: -
A braking system conducts an electronic command signal via a cable extending through multiple first vehicles in a first segment of a multi-vehicle system. The electronic command signal directs engagement or release of an air brake coupled to a brake pipe that extends along a length of the multi-vehicle system. A pneumatic command signal is communicated via the brake pipe to one or more second vehicles in a second segment of the multi-vehicle system. The pneumatic command signal directs one or more of the engagement or the release of the air brake coupled to the brake pipe in the one or more second vehicles.

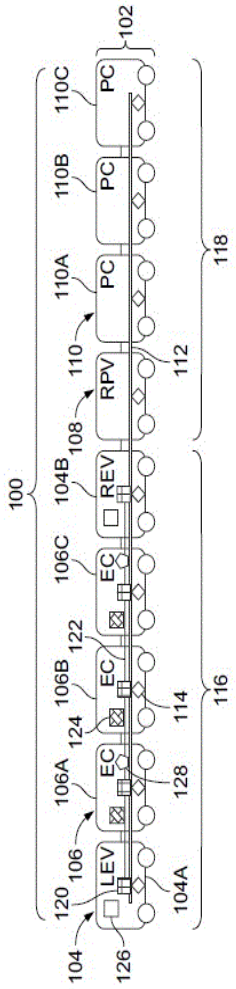

21: 2021/07336. 22: 2021/09/29. 43: 2023/08/07
51: A61K; A61Q
71: UNILEVER GLOBAL IP LIMITED
72: AVERY, ANDREW RICHARD, DICKINSON, KELVIN BRIAN
33: EP 31: 19171398.1 32: 2019-04-26
54: HAIR CONDITIONING COMPOSITION
00: -
This invention relates to hair care compositions containing a branched organopolysiloxane, "oil in water" emulsion. Despite the prior art, there still exists the opportunity to increase the benefits delivered through conditioning hair care compositions. A particular need exists for hair care compositions which can deliver enhanced silicone deposition, especially to the damaged parts of the hair. It is therefore an object of the present invention to provide a hair care composition which can deliver enhanced silicone deposition onto the hair, in

particular damaged hair. It has been found that this can be achieved by a hair care composition comprising a conditioning gel phase with an aqueous emulsion of a branched organopolysiloxane comprising an aqueous continuous phase of water and a cationic surfactant or a blend of non-ionic and cationic surfactants and a dispersed phase of the branched organopolysiloxane and a hydrocarbon oil, and the aqueous emulsion having a particle size of 5 to less than 12 microns Dv(50).

21: 2021/07339. 22: 2021/09/29. 43: 2023/08/07
51: A61K; A61Q
71: UNILEVER GLOBAL IP LIMITED
72: HIBAN, DOUGLAS JOHN, MILLER, JAMIE LYNN, VASUDEVAN, TIRUCHERAI VARAHAN
33: EP 31: 19175538.8 32: 2019-05-21
54: ISOTROPIC LIQUID CLEANSERS COMPRISING ACYL ISETHIONATE AND METHYL ACYL TAURATE SURFACTANT MIXTURES
00: -
The invention relates to isotropic liquid composition comprising acyl isethionate, methyl acyl taurate and amphoteric, zwitterionic and/or nonionic surfactant. Unexpectedly, it has been found that, when ratio of isethionate to taurate is monitored, enhanced lather is achieved.

21: 2021/07346. 22: 2021/09/23. 43: 2023/08/07
51: A61K; C07C; A61P
71: NOVAREMED LTD.
72: KAPLAN, ELI, HETT, ROBERT
33: EP 31: 19153315.7 32: 2019-01-23
54: COMPOUNDS FOR USE IN THE TREATMENT OR PROPHYLAXIS OF PAIN, INFLAMMATION AND/OR AUTOIMMUNITY
00: -
The present invention relates to a polymorphic form of (S,S)-2-N(3-O-(propan-2-ol)-1-propyl- 4-hydroxybenzene)-3-phenylpropylamide or synonymously named N-[2-(4-Hydroxy-phenyl)- -(2-hydroxy-propoxymethyl)-ethyl]-3-phenyl-propionamide and to the treatment or prophylaxis of pain, inflammation and/or autoimmunity and provides a method of treating or preventing pain, inflammation and/or autoimmunity as well as the use of this polymorphic form in the manufacture of medicaments for the treatment or prophylaxis of pain (preferably nociceptive or neuropathic), inflammation and/or autoimmunity in humans and/or non-human animals.

21: 2021/07395. 22: 2021/09/30. 43: 2023/08/07
51: B01L; A61B
71: VIDYA HOLDINGS LTD
72: VAN WORKUM, STEFAN LEO, SMITH, CALLUM ROBERTSON, DORRESTIJN, MARKO, KLUG, DAVID R
33: GB 31: 1902792.9 32: 2019-03-01
54: IMPROVEMENTS IN OR RELATING TO A SAMPLE MANAGEMENT MODULE
00: -
A sample management module for collecting a fluid sample is provided. The module comprising; a sample collection device comprising a sample collection location; a decoupling zone configured to receive sample from the collection device, an overflow reservoir in fluid communication with the decoupling zone to accommodate any sample that does not fit into the decoupling zone; wherein the overflow reservoir is configured to ensure pressure within the module can be managed. A cartridge comprising a sample management module is also provided.

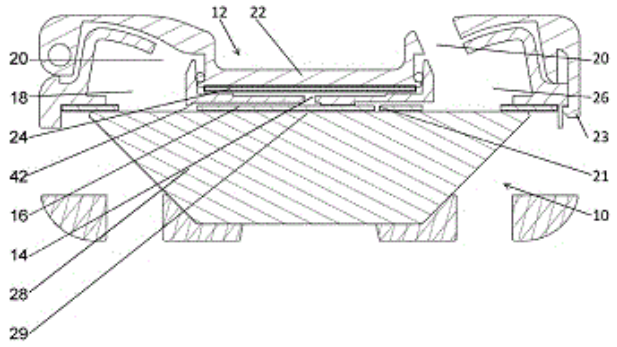

21: 2021/07396. 22: 2021/09/30. 43: 2023/08/07
51: A61B; C03B; G01N
71: VIDYA HOLDINGS LTD
72: VAN WORKUM, STEFAN LEO, SMITH, CALLUM ROBERTSON, DORRESTIJN, MARKO, KLUG, DAVID R
33: GB 31: 1902789.5 32: 2019-03-01
33: GB 31: 1902788.7 32: 2019-03-01
54: IMPROVEMENTS IN OR RELATING TO AN OPTICAL ELEMENT
00: -
An assay cartridge for detecting a target component in a fluid is provided. The assay cartridge including

an optical element comprising: a light pathway comprising an input surface, reflective surface and output surface configured to enable light to enter, reflect and create an evanescent field in the vicinity of the reflective surface and exit the element;a plurality of capture components deposited on the reflective surface in the vicinity of the evanescent field; and a transmission surface configured to enable emissions from the evanescent field to exit the element; wherein the assay cartridge is a single use cartridge.

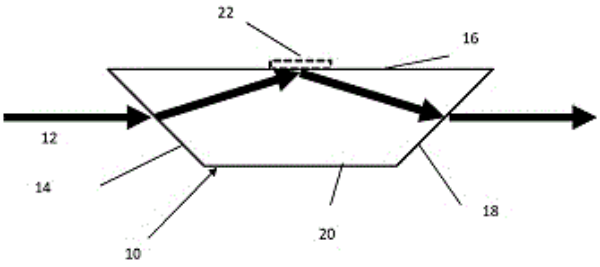

21: 2021/07398. 22: 2021/09/30. 43: 2023/08/07
51: B01L; G01N
71: VIDYA HOLDINGS LTD
72: DORRESTIJN, MARKO, KLUG, DAVID R, LU, SHAO-JU, SMITH, CALLUM ROBERTSON, VAN WORKUM, STEFAN LEO, TUREK, VLAD
33: GB 31: 1902810.9 32: 2019-03-01

54: DISPOSITION OF REAGENTS IN ASSAY DEVICE

00: -

An assay cartridge for detecting a target component in a liquid sample is provided. The cartridge comprises: a sample collection unit configured to introduce the liquid sample into the cartridge; a fluid pathway commencing at its proximal end at the sample collection unit and extending distally through the cartridge including: one or more capture components immobilised within the fluid pathway; one or more detection reagents provided within the diffusion distance of the capture components.

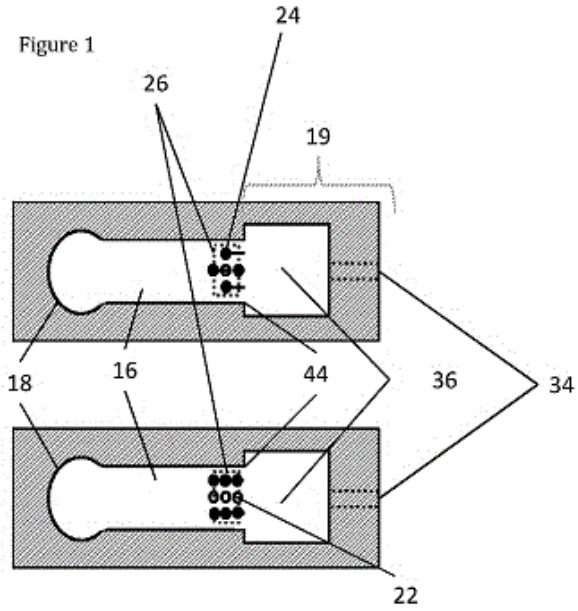

21: 2021/07450. 22: 2021/10/04. 43: 2023/08/07
51: H04N
71: BEIJING BYTEDANCE NETWORK TECHNOLOGY CO., LTD., BYTEDANCE INC.
72: DENG, ZHIPIN, ZHANG, KAI, ZHANG, LI, LIU, HONGBIN, XU, JIZHENG
33: CN 31: PCT/CN2019/082424 32: 2019-04-12

54: MOST PROBABLE MODE LIST CONSTRUCTION FOR MATRIX-BASED INTRA PREDICTION

00: -

Devices, systems and methods for digital video coding, which includes matrix-based intra prediction methods for video coding, are described. In a representative aspect, a method for video processing includes generating, for a conversion between a current video block of a video and a coded representation of the current video block, a most probable mode (MPM) list based on a rule, where the rule is based on whether a neighboring video block of the current video block is coded with a matrix based intra prediction (MIP) mode, and performing the conversion between the current video block and the coded representation of the current video block using the MPM list, where the conversion applies a non-MIP mode to the current video block, and where the non-MIP mode is different from the MIP mode.

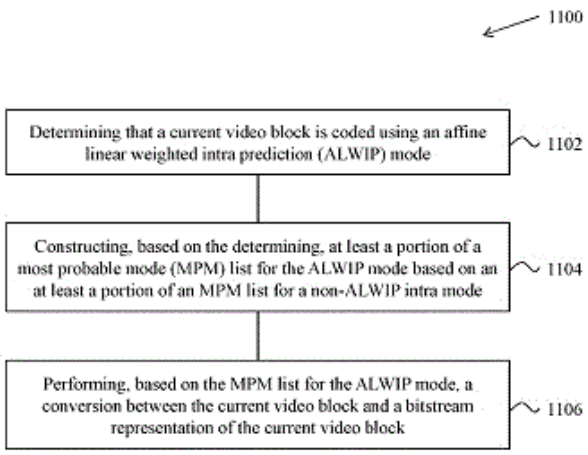

21: 2021/07451. 22: 2021/10/04. 43: 2023/08/04
51: H04N
71: BEIJING BYTEDANCE NETWORK TECHNOLOGY CO., LTD., BYTEDANCE INC.
72: DENG, ZHIPIN, ZHANG, KAI, ZHANG, LI, LIU, HONGBIN, XU, JIZHENG
33: CN 31: PCT/CN2019/082424 32: 2019-04-12
54: CHROMA CODING MODE DETERMINATION BASED ON MATRIX-BASED INTRA PREDICTION
00: -
Devices, systems and methods for digital video coding, which includes matrix-based intra prediction methods for video coding, are described. In a representative aspect, a method for video processing includes performing a first determination that a luma video block of a video is coded using a matrix based intra prediction (MIP) mode in which a prediction block of the luma video block is determined by performing, on previously coded samples of the video, a boundary downsampling operation, followed by a matrix vector multiplication operation, and selectively followed by an upsampling operation, performing, based on the first determination, a second determination about a chroma intra mode to be used for a chroma video block associated with the luma video block, and performing, based on the second determination, a conversion between the chroma video block and a bitstream representation of the chroma video block.

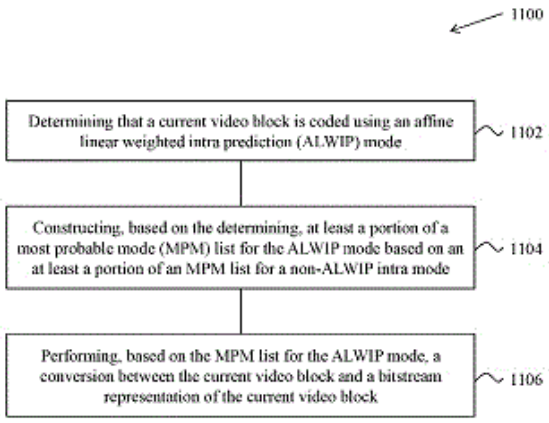

21: 2021/07452. 22: 2021/10/04. 43: 2023/08/04
51: H04N
71: BEIJING BYTEDANCE NETWORK TECHNOLOGY CO., LTD., BYTEDANCE INC.
72: DENG, ZHIPIN, ZHANG, LI, LIU, HONGBIN, ZHANG, KAI, XU, JIZHENG
33: CN 31: PCT/CN2019/083320 32: 2019-04-18
54: RESTRICTION ON APPLICABILITY OF CROSS COMPONENT MODE
00: -
A method for visual media processing, comprising performing a conversion between a current chroma video block of visual media data and a bitstream representation of the current chroma video block, wherein, during the conversion, a chroma residual of the current chroma video block is scaled based on a scaling coefficient, wherein the scaling coefficient is derived at least based on luma samples located in predefined positions.

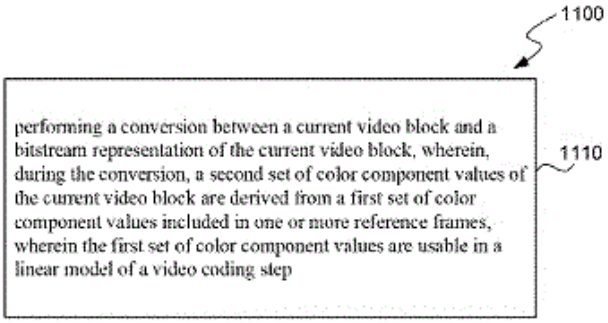

21: 2021/07453. 22: 2021/10/04. 43: 2023/08/04
51: H04N
71: BEIJING BYTEDANCE NETWORK TECHNOLOGY CO., LTD., BYTEDANCE INC.

72: DENG, ZHIPIN, ZHANG, LI, LIU, HONGBIN, ZHANG, KAI, XU, JIZHENG
33: CN 31: PCT/CN2019/083846 32: 2019-04-23
54: METHODS FOR CROSS COMPONENT DEPENDENCY REDUCTION
00: -
A method for visual mediaprocessing, comprising: computing, during a conversion between a current video block of visual media data and a bitstream representation of the current video block, a cross-component linear model (CCLM) and/or a chroma residual scaling (CRS) factor for the current video block based, at least in part, on neighboring samples of a corresponding luma block which covers a top-left sample of a collocated luma blockassociated with the current video block, wherein one or more characteristics of the current video block are used for identifying the corresponding luma block.

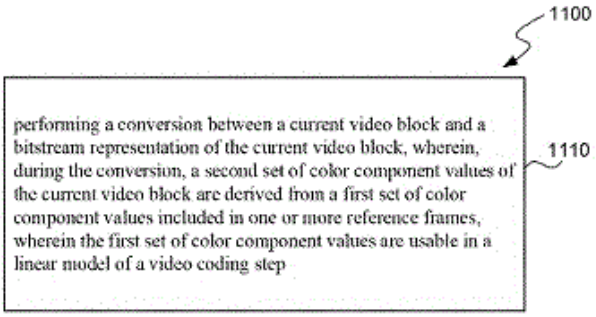

21: 2021/07454. 22: 2021/10/04. 43: 2023/08/04
51: C11D
71: UNILEVER GLOBAL IP LIMITED
72: THOMPSON, KATHERINE MARY, DA SILVA, HÉLDER DANIEL PEIXOTO
33: EP 31: 19167694.9 32: 2019-04-05
54: DETERGENT COMPOSITIONS
00: -
The invention provides a detergent composition for the non-oxidative laundering of fabric stains, the composition comprising: (a) from 0.1 to 10% (by weight based on the total weight of the composition) of N,N'-bis(2- hydroxybenzyl)-ethylenediamine-N,N'-diacetic acid (HBED) and/or salts thereof, and (b) from 3 to 80% (by weight based on the total weight of the composition) of one or more detersive surfactants.

21: 2021/07495. 22: 2021/10/05. 43: 2023/08/04
51: H05K
71: SUBMER TECHNOLOGIES, S.L.
72: MONTES MONTESERIN, DAVID , VALLS SOLER, POL , POPE PALACÍN, DANIEL ESTEVE , BRICOLLÉ SANCHO, JORDI , GINER GUTIÉRREZ, MIGUEL , BESARES MATAS, JOAN
54: COOLING SYSTEM FOR COMPUTER COMPONENTS
00: -
The invention relates to a cooling system for immersed computer components, which comprises: a cooling bath tank containing a cooling fluid that flows inside same from at least one outlet to at least one inlet, the cooling bath tank being configured and arranged to have placed therein, at least partly immersed in the cooling fluid contained in same, at least one first portion of at least one computer component to be cooled; and at least one refrigeration unit designed to collect and refrigerate the cooling fluid that exits from the at least one inlet and to re-introduce it, once refrigerated, through the at least one outlet into the cooling bath tank, the system being characterised in that the at least one refrigeration unit is configured to be inserted inside the cooling bath tank, at least partly immersed in the cooling fluid contained in same, and to be removed from same.

21: 2021/07805. 22: 2021/10/08. 43: 2023/08/10
51: B32B; E04F
71: FLOORING INDUSTRIES LIMITED, SARL
72: SCHACHT, BENNY, DE RICK, JAN
33: BE 31: 2019/5064 32: 2019-02-04
54: FLOOR PANEL AND METHOD FOR MANUFACTURING THE SAME
00: -
Floor panel comprising a core (6) and decorative layer (7) applied thereon, wherein the material of the aforementioned core (6) has a density of more than 1000 kg/m3, preferably more than 1300 kg/m3, and has a thickness of 6 millimeters or more, characterized in that the core (6) has internal spaces and/or that the core (6) has spaces (9) on its bottom side. The invention furthermore relates to a method for manufacturing such floor panels (1).

21: 2021/07823. 22: 2021/10/14. 43: 2023/08/10
51: A61K
71: THULIN, CLAES
72: THULIN, CLAES
33: SE 31: 1950579-1 32: 2019-05-15

54: 4-[5-[(RAC)-1-[5-(3-CHLOROPHENYL)-3-ISOXAZOLYL]ETHOXY]-4-METHYL-4H-1,2,4-TRIAZOL-3-YL]PYRIDINE FOR USE IN PREVENTION AND/OR TREATMENT OF PAIN IN AN ANIMAL

00: -

The present invention relates to 4-[5-[(rac)-1-[5-(3-Chlorophenyl)-3-isoxazolyl]ethoxy]-4- methyl-4*H*-1,2,4-triazol-3-yl]pyridine (TT00), or a pharmaceutically acceptable salt thereof, diastereomer, enantiomer, isotope, pro-drug or metabolite or mixture thereof, or a pharmaceutical composition comprising said TT00, for use in prevention and/or treatment of pain, such as chronic and/or periferal pain and/or pain related to arthritis, such as osteoarthritis, or for use in prevention and/or treatment of said pain combined with b) GERD or c) anxiety in animals, such as dogs, cats or horses.

21: 2021/07829. 22: 2021/10/14. 43: 2023/08/10
51: B01J; C07C
71: JOHNSON MATTHEY PUBLIC LIMITED COMPANY
72: CARTHEY, NICHOLAS, JOHNSTON, PETER
33: GB 31: 1908844.2 32: 2019-06-20

54: GOLD CONTAINING CATALYST, METHOD OF PREPARATION AND USE

00: -

The present invention relates to improvements in known gold containing catalysts. In particular, the present invention relates to improving the stability and/or inhibition of deactivation of gold containing catalysts via the addition of an inorganic oxide, hydroxide, oxo-salt or oxo-acid. There is also disclosed a method for preparing said catalyst most suitably via an impregnation method. Such catalysts are useful in the production of vinyl chloride monomer.

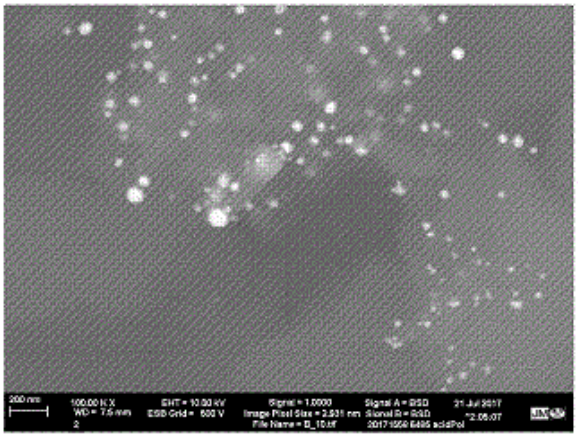

21: 2021/07863. 22: 2021/10/15. 43: 2023/10/16
51: B09B; C22B
71: MINTEK
72: TSEBE, Sello Peter, DENTON, Glen Michael
33: ZA 31: 2020/04360 32: 2020-07-16

54: PROCESS FOR TREATING ELECTRICAL AND ELECTRONIC WASTE

00: -

An integrated thermal method for the treatment of e-waste to recover valuable metals wherein e-waste streams of CRT funnel glass and PCB concentrate are smelted in respective gas-fired rotary furnaces.

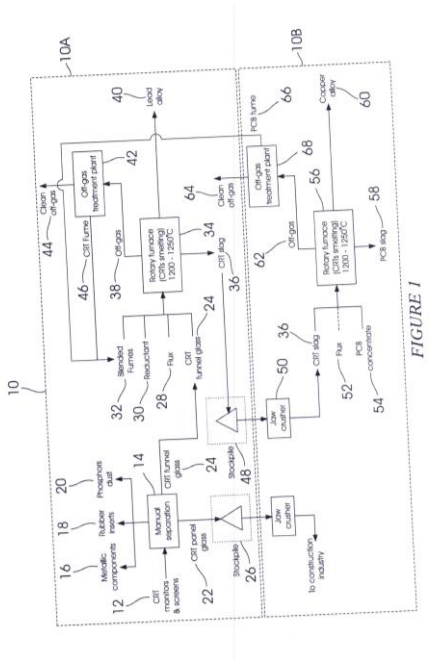

FIGURE 1

21: 2021/07931. 22: 2021/10/18. 43: 2023/08/11
51: C07K; G01N
71: GENENTECH, INC., AC IMMUNE SA

72: ADOLFSSON, OSKAR, AYALON, GAI, DI CARA, DANIELLE MARIE, HOTZEL, ISIDRO
33: US 31: 62/171,693 32: 2015-06-05
54: ANTI-TAU ANTIBODIES AND METHODS OF USE
00: -
The invention provides anti-Tau antibodies and methods of using the same.

21: 2021/07947. 22: 2021/10/18. 43: 2023/08/07
51: A61K; C07K; A61P
71: FUNDACIÓ PRIVADA INSTITUT D'INVESTIGACIÓ ONCOLÒGICA DE VALL HEBRON, INSTITUCIÓ CATALANA DE RECERCA I ESTUDIS AVANÇATS, PEPTOMYC, S.L.
72: SOUCEK, LAURA, BEAULIEU, MARIE-EVE, CASACUBERTA-SERRA, SÍLVIA
33: EP 31: 19382194.9 32: 2019-03-19
54: COMBINATION THERAPY FOR THE TREATMENT OF CANCER
00: -
The invention relates to a combination of an immuno-oncology agent with Omomyc, a functionally equivalent variant thereof, a conjugate comprising Omomyc or said functionally equivalent variant, a polynucleotide encoding said polypeptides, a vector comprising said polynucleotide and a cell capable of secreting the polypeptide or the conjugate. The invention also relates to pharmaceutical compositions containing the combination of the invention and to their medical uses, particularly their uses in the treatment of cancer.

21: 2021/07948. 22: 2021/10/18. 43: 2023/08/07
51: H04N
71: BYTEDANCE INC.
72: ZHU, WEIJIA, ZHANG, LI, XU, JIZHENG, CHUANG, HSIAO CHIANG
33: CN 31: PCT/CN2019/084008 32: 2019-04-24
54: CONSTRAINTS ON QUANTIZED RESIDUAL DIFFERENTIAL PULSE CODE MODULATION REPRESENTATION OF CODED VIDEO
00: -
Video coding and decoding methods are described. In example method includes determining that a differential coding mode is applicable to a conversion between a current video block of a video and a bitstream representation of the current video block, and performing, based on the determining, the conversion between the current video block and the bitstream representation of the current video block using the differential coding mode according to an implementation rule, where, in the differential coding mode, the current video block is represented in the bitstream representation using a difference between a quantized residual of an intra prediction of the current video block and a prediction of the quantized residual, and where, in the differential coding mode, the difference between the quantized residual and the prediction of the quantized residual is represented using a differential pulse coding modulation (DPCM) representation.

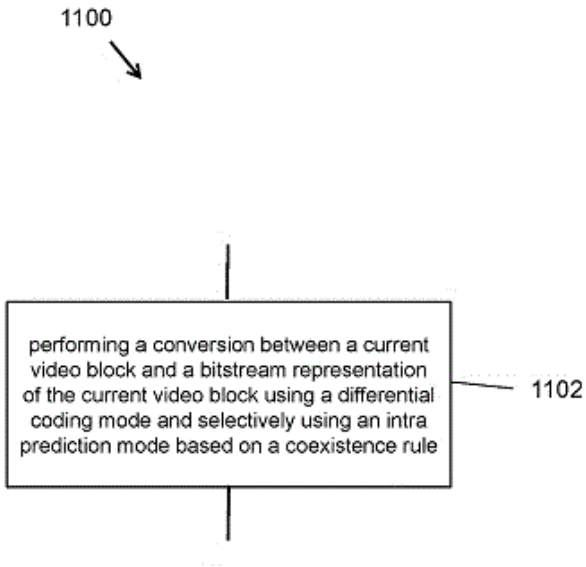

21: 2021/08006. 22: 2021/10/19. 43: 2023/08/07
51: G06Q
71: WARRANTEE INC.
72: SHONO, YUSUKE
33: JP 31: 2019-053356 32: 2019-03-20
54: INSURANCE MANAGEMENT SERVER, SERVICE PROVIDING SYSTEM, AND SERVICE PROVIDING METHOD
00: -
[Problem] To reduce the burden on a user, and promote the purchase of insurance or other equivalent services. [Solution] A management server 10, which is connected to a user terminal 20 used by a user, an insurer's terminal 30 used by an insurer, and a sponsor's terminal 40 used by a sponsor through a communication network, receives information about insurance products from the insurer's terminal 30, receives information about purchase conditions of the insurance products from the sponsor' terminal 40, and determines whether to permit the user to purchase the service by at least

partially referring to the purchase conditions received from the sponsor's terminal 40, when an application for the service purchase is received from the user terminal 20.

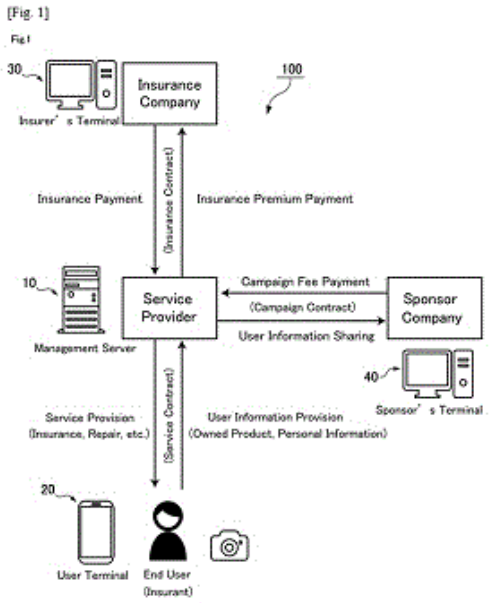

21: 2021/08007. 22: 2021/10/19. 43: 2023/08/07
51: G16H; A61J; A61M
71: ICU MEDICAL, INC.
72: FRYMAN, MARSHALL, KUMAR, UJJAWAL, VITHYANANTHAN, ANANDARAMAN, JAIN, PRITISH, KHADAR, SYEDJAVID SYED, PICINICH, MATTEO, TSAI, YUN SHAO
33: IN 31: 201911015467 32: 2019-04-17
54: SYSTEM FOR ONBOARD ELECTRONIC ENCODING OF THE CONTENTS AND ADMINISTRATION PARAMETERS OF IV CONTAINERS AND THE SECURE USE AND DISPOSAL THEREOF
00: -
A system and method for tracking and administering liquid medications in a hospital, clinic, or patient residence, including encoding information onto a short range communication device affixed to a liquid container in a hospital pharmaceutical filling or compounding center, the information including drug information, patient information, and IV administration information, transferring the liquid container to a patient's bedside, programming an infusion course into a bedside IV infusion pump by enabling the pump to read the encoded information on the communication device, and disposing of the liquid container and any residual drug in a smart disposal bin that reads the communication device and weighs the container. The disposal bin may confirm the chemical contents of the container.

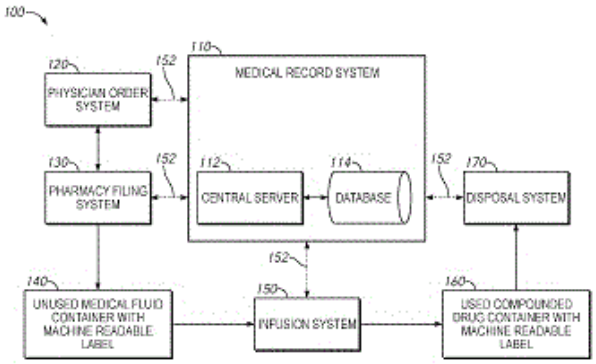

21: 2021/08010. 22: 2021/10/19. 43: 2023/08/07
51: A61K; A61Q
71: UNILEVER GLOBAL IP LIMITED
72: HIBAN, DOUGLAS JOHN, MILLER, JAMIE LYNN, VASUDEVAN, TIRUCHERAI VARAHAN
33: EP 31: 19175537.0 32: 2019-05-21
54: LAMELLAR LIQUID CLEANSERS COMPRISING ACYL ISETHIONATE AND METHYL ACYL TAURATE SURFACTANT MIXTURES
00: -
The invention relates to lamellar liquid composition comprising acyl isethionate, methyl acyl taurate, amphoteric and/or zwitterionic surfactant. Unexpectedly, applicants have found that, when ratio of isethionate to taurate is kept at about to 1:1, enhanced lather is achieved. Other criticalities include ratio of amphoteric and /or zwitterionic to anionic surfactant, total amount of surfactant, and pH.

21: 2021/08101. 22: 2021/10/21. 43: 2023/08/11
51: B65C
71: SINCLAIR SYSTEMS INTERNATIONAL, LLC.
72: GRAHAM, JUSTIN, GREER, SAMUEL AARON, JENSEN, RUSSELL ALAN, GUADAGNINI, KEVIN, ISCH, JEREMY BENJAMIN
33: US 31: 62/919,671 32: 2019-03-22
54: HIGH SPEED LABELER FOR LARGE PRODUCE ITEMS
00: -
An automatic, high speed labeling machine is provided for applying individual labels to large and variable size produce items. The label strips used are much larger and heavier than known label strips

used for small produce such as apples and pears. The increased weight causes label strip overrun when the labeler is paused and also causes slippage of the label strip. A label strip deflector is provided which causes the larger and heavier label strip to fold back on itself rather than to overrun and foul the application of labels. The drive rollers are modified to eliminate slippage of the heavier label strip.

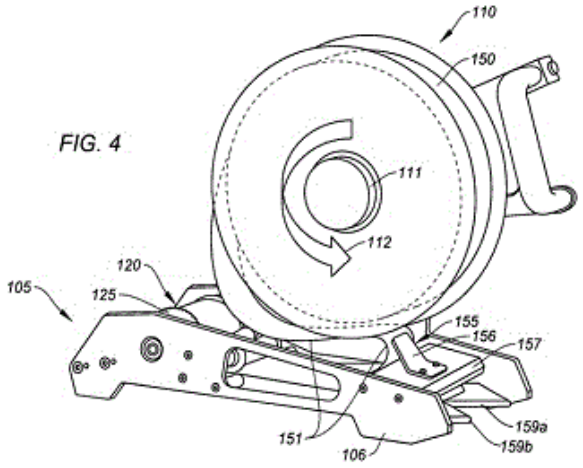

21: 2021/08105. 22: 2021/10/21. 43: 2023/08/11
51: F24F; B01D
71: ATLAS COPCO AIRPOWER, NAAMLOZE VENNOOTSCHAP
72: HELLEMANS, GEERT, CREPAIN, THIBAULT, VAN NEDERKASSEL, FREDERIK
33: BE 31: BE20195382 32: 2019-06-13
54: STATIC DRYER
00: -
Drying device (1) comprising a drying medium (2) with a predetermined number of drying segments (3a, 3b,... 3f) which extend adjacently of each other and are associated with at least one opening (8) at each of a first connecting end (4) and a second connecting end (5), wherein the predetermined number is greater than six and wherein each connecting end comprises first and second complementary concentric elements which are rotatable relative to each other round an axis (9), wherein the openings are provided in the first concentric elements along a rotation ring around the axis, wherein the second concentric elements each delimit at least two channels (10A, 10B) which open at the position of said rotation ring, so that corresponding channels of the first and second connecting end are connected to each other via the openings and the drying segments in order to allow a first airflow and a second airflow through the drying device.

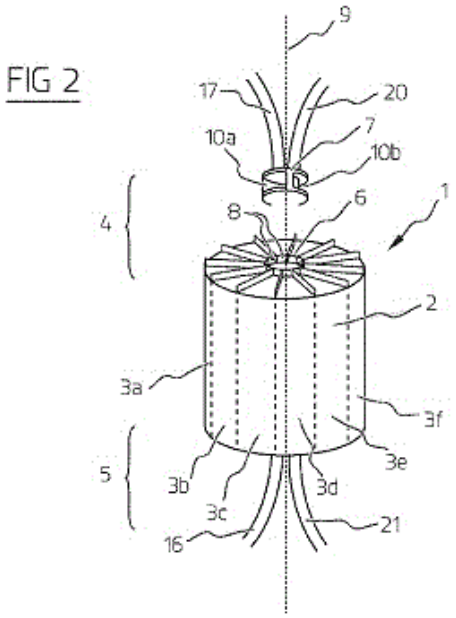

21: 2021/08107. 22: 2021/10/21. 43: 2023/08/11
51: A61K; A61Q
71: UNILEVER GLOBAL IP LIMITED
72: CAO, XIUJUAN, WANG, LIN
33: EP 31: 19183831.7 32: 2019-07-02
33: CN 31: PCT/CN2019/087738 32: 2019-05-21
54: COSMETIC COMPOSITIONS FOR SOFT-FOCUS
00: -
Disclosed is a cosmetic composition comprising: (i) microspheres for providing soft-focus benefits where said microspheres comprise at least 50% cellulose by weight of microspheres; and, (ii) 0.5 to 10 wt% of a non-silica hydrophilic inorganic thickener; wherein refractive index of said microspheres is from 1.42 to 1.50.

21: 2021/08158. 22: 2021/10/22. 43: 2023/08/11
51: C03C; G21F
71: NIPPON FIBER CORPORATION
72: FUKAZAWA, HIROSHI
33: JP 31: PCT/JP2019/039911 32: 2019-10-09
33: JP 31: 2019-083950 32: 2019-04-25
54: RADIATION-RESISTANT INORGANIC MATERIAL AND FIBER THEREOF
00: -
[Problem] To provide an inorganic material which exhibits excellent radiation resistance and excellent

melt spinnability. [Solution] An inorganic material that contains SiO_2, Al_2O_3, CaO and Fe_2O_3as components, wherein the inorganic material exhibits excellent melt spinnability and exhibits excellent radiation resistance as a result of setting the mass percentages in terms of oxides of the components in the inorganic material to be such that: (i) the total content of $SiO_2$and $Al_2O_3$is 40-70 mass%; (ii) the $Al_2O_3/(SiO_2+Al_2O_3)$ (mass ratio) falls within the range 0.15-0.40; (iii) the content of $Fe_2O_3$is 16-25 mass%; and (iv) the content of CaO is 5-30 mass%.

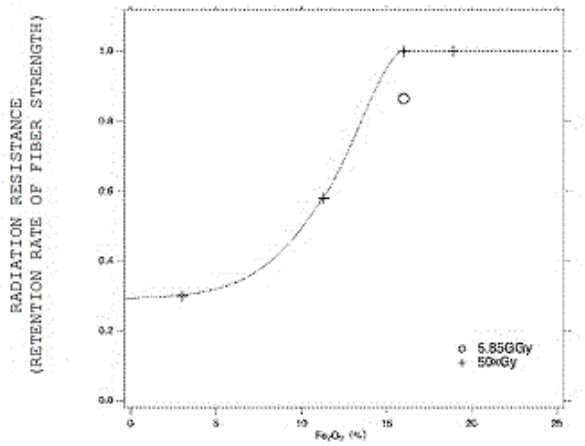

21: 2021/08160. 22: 2021/10/22. 43: 2023/08/11
51: B65G; F16H
71: SEPARATION TECHNOLOGIES LLC
72: EIRIKSSON, ARI, RIVERA-ORTIZ, JOSE L
33: US 31: 62/831,329 32: 2019-04-09
54: TENSION MECHANISM FOR BELT-TYPE TRIBOELECTRIC SEPARATOR DEVICES
00: -
An improved belt separator system and an improved method to separate particle mixtures based on triboelectric separation of particles is disclosed. The separator system includes a tensioning system embodying a tension roller and a two-part rotating shaft assembly.

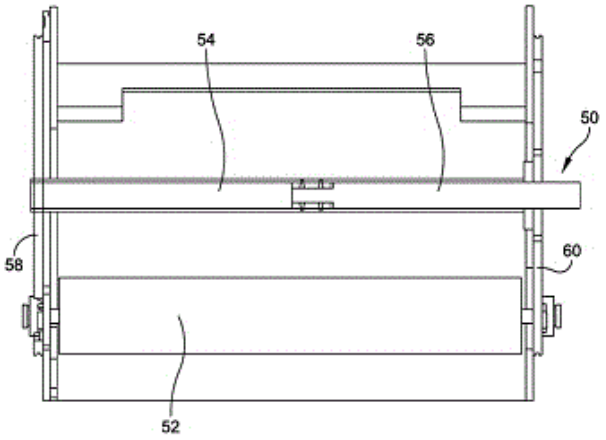

21: 2021/08514. 22: 2021/11/02. 43: 2023/08/10
51: B32B; C08J
71: UNIVERSIDADE DO PORTO, INSTITUTO POLITÉCNICO DE VISEU, SURFORMA, S.A.
72: BRITO DA COSTA, Claudia, TAVARES DA SILVA VINHAS, Ana João, SANTOS SILVA MARTINS, Jorge Manuel, HORA DE CARVALHO, Luísa Maria, DE MONTENEGRO BAPTISTA MALHEIRO DE MAGALHÃES, Fernão Domingos
33: PT 31: 115478 32: 2019-04-29
54: A COMPOSITE PANEL FOR STRUCTURAL AND DECORATIVE SURFACES
00: -
The present disclosure is directed to panels for structural and decorative surfaces, in particular panels containing polymer-based materials, suitable for the coating of surfaces, for example, and containing such polymer-based materials in the respective layers. The invention discloses a composite panel (100) for structural and decorative surfaces, the composite panel comprising a core panel, the core panel (10) comprising a mixture of granules of a polymeric material and a bonding element (1), the bonding element providing for the bonding of the granules of a polymeric material. The composite panel (100) of the present disclosure can be applied to structural and decorative surfaces which have to be resistant to high moisture, such as walls, ceilings or floors of bathrooms, kitchens, locker rooms in public pools and schools, or others, in which prior art boards are over performing and require the use of more complex components.

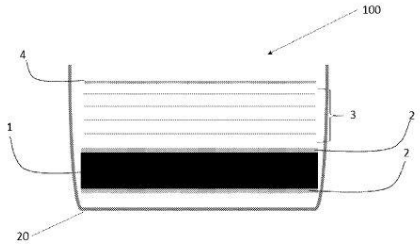

21: 2021/08637. 22: 2021/11/04. 43: 2023/08/10
51: C07K; C12P; C12N
71: CJ CHEILJEDANG CORPORATION
72: LEE, HAN HYOUNG, PARK, SANG MIN, BAE, HYUN WON, BYUN, HYO JEONG, SHIN, YONG UK, LIM, BORAM, JANG, JAEWON, JUNG, MOO YOUNG, CHOI, YUNJUNG
33: KR 31: 10-2019-0173087 32: 2019-12-23
33: KR 31: 10-2019-0173088 32: 2019-12-23
54: MICROORGANISM FOR PRODUCING L-AMINO ACID HAVING INCREASED CYTOCHROME C ACTIVITY, AND L-AMINO ACID PRODUCTION METHOD USING SAME
00: -
Provided are a microorganism for producing L-amino acid, having increased cytochrome C activity, and an L-amino acid production method using the microorganism.



21: 2021/08644. 22: 2021/11/04. 43: 2023/08/10
51: A01G
71: A.I. INNOVATIONS N.V.
72: RUSKIN, RODNEY
33: US 31: 62/848,467 32: 2019-05-15
54: METHOD TO IRRIGATE USING HYDROGELS IN THE SOIL TO DRAW WATER FROM THE ATMOSPHERE
00: -
Provided is a method of delivering water to a root system of a crop, the method including causing the crop to be adjacent to, or in a region of, soil containing hydrogel, and delivering air to the hydrogel.

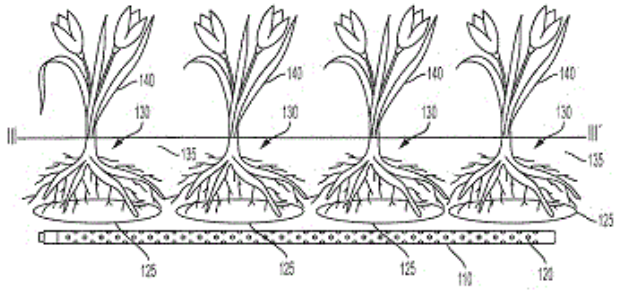

21: 2021/08668. 22: 2021/11/05. 43: 2023/08/10
51: E01F; B60R; B62D
71: VALTIR, LLC
72: BUEHLER, MICHAEL J
33: US 31: 62/848,262 32: 2019-05-15
54: CRASH ATTENUATOR WITH RELEASE PLATE HINGE ASSEMBLY, RELEASE PLATE HINGE ASSEMBLY AND METHOD FOR THE USE THEREOF
00: -
A crash attenuator includes a frame having a first frame member and a second frame member rigidly connected with a hinge assembly in a pre-impact configuration. The first and second frames are hingedly connected with the hinge assembly in an impact configuration. The hinge assembly includes a release plate fixedly connected to the first frame member, wherein the release plate comprises a fastener opening and a slot extending between the fastener opening and an edge of the release plate, and a fastener extending through the fastener opening and connecting the release plate to the second frame member when the first and second frames are in the pre-impact configuration. A hinge assembly, and method of using the crash attenuator, are also provided.

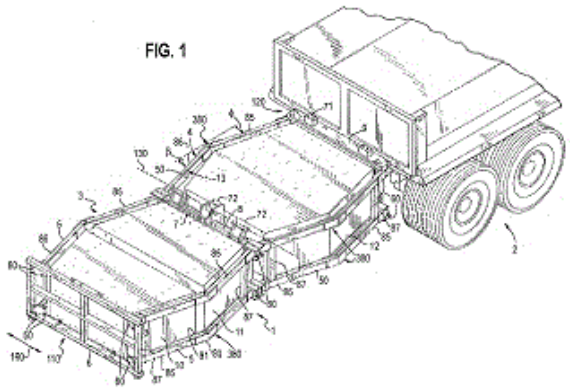

21: 2021/08670. 22: 2021/11/05. 43: 2023/08/11
51: A61P; A61K
71: FUJI PHARMA CO., LTD., KINOPHARMA, INC.
72: INADA, TOSHIYUKI, SHIMODAIRA, TAKAKI, KANAYAMA, RYOSEI, ONOGI, HIROSHI, YAMAGUCHI, TETSUO
33: JP 31: 2019-084695 32: 2019-04-25

54: PHARMACEUTICAL PREPARATION AND METHOD FOR PRODUCING SAME

00: -

Disclosed is a pharmaceutical preparation in the granule form with a core particle and a coating layer covering the core particle, wherein the core particle contains a drug, a first core particle component, a second core particle component, and a surfactant. The drug is an aniline derivative represented by General Formula (I) [where W or S represents O], a pharmaceutically acceptable salt thereof, or a hydrate thereof. The first core particle component is at least one type of crystalline cellulose having a shape selected from a needle-like shape and a substantially columnar shape. The second core particle component is at least one type of substantially spherical pharmaceutically acceptable additive. This pharmaceutical preparation has excellent flowability sufficient for practical production and can contain a therapeutically effective amount of a poorly-water-soluble drug (CDK 9 inhibitor).

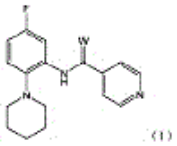

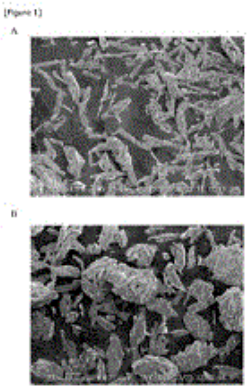

21: 2021/08671. 22: 2021/11/05. 43: 2023/08/11
51: E05B
71: ABUS AUGUST BREMICKER SÖHNE KG
72: BANSE, MANUEL
33: DE 31: 10 2019 113 163.4 32: 2019-05-17

54: MOBILE LOCK

00: -

The invention relates to a mobile lock comprising a lock body and at least one securing part, in particular a U-bracket or block, which can be selectively locked to the lock body or released from the lock body. The lock body comprises at least one insertion opening for inserting the at least one securing part into the lock body, at least two sensors for detecting the securing part inserted into the lock body and for generating corresponding detection signals, an analysis and control circuit for ascertaining a current occupancy state of the lock body on the basis of the generated detection signals, wherein the analysis and control circuit is designed to assign different combinations of generated detection signals to different occupancy state of the lock body, and an electromechanical locking device which has at least one electrically drivable latch for locking the at least one securing part in the at least one insertion opening, said analysis and control circuit being designed to control the locking device.

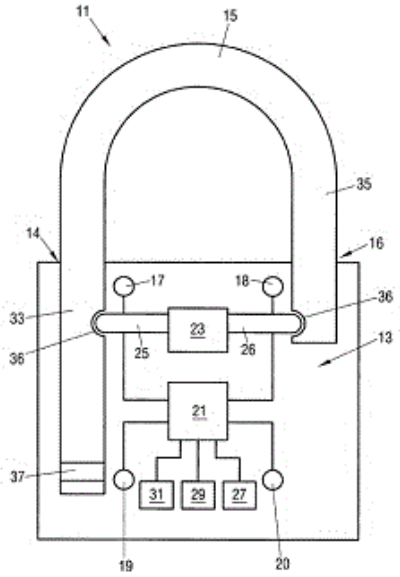

21: 2021/08699. 22: 2021/11/08. 43: 2023/08/22
51: B60R; B62D; E05B
71: AEROKLAS COMPANY LIMITED
72: VITOORAPAKORN, Ekawat, VITOORAPAKORN, Supawadee
33: TH 31: 2003003108 32: 2020-11-16

54: REMOTE-CONTROLLED ELECTRIC UNLATCH DEVICE TO OPEN A TAILGATE OF PICKUP TRUCK

00: -

A remote-controlled electric unlatch device to open a tailgate of pickup truck wherein the pickup truck includes a truck bed and a downward rotatably tailgate. The tailgate comprises a left latch and a right latch. The rear edge of the truck bed comprises a left latch supporting member and a right latch supporting member. The rear edge of the truck bed is also equipped with a left spring and a right spring for pushing the tailgate. When the tailgate is in the closed position, the left spring and the right spring are pressed by the tailgate. At least one electric actuator is connected to the left latch and the right latch. The electric actuator acts to unlatch the left latch and the right latch simultaneously. A key fob that is operated by pressing the buttons. And a control box that connects to the electric supply of the pickup truck, to the electric actuator and to wires that supply voltage under controlling by the key fob.

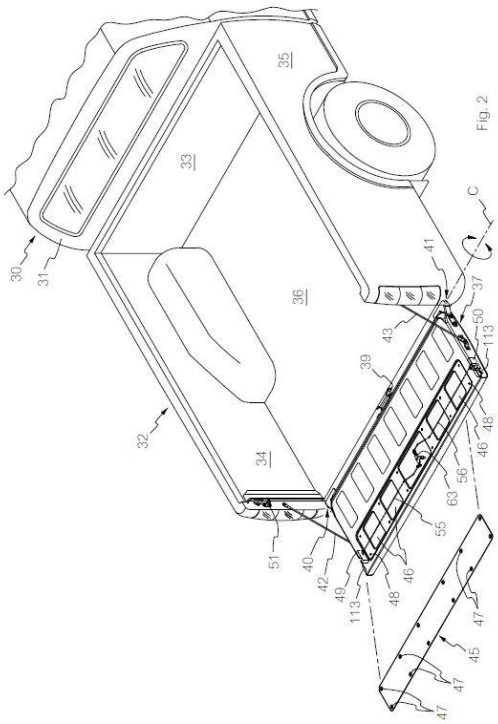

21: 2021/08755. 22: 2021/11/08. 43: 2023/02/15
51: C23C
71: CHATURVEDI, Ashok
72: CHATURVEDI, Ashok
33: IN 31: 201911018899 32: 2019-05-11

54: POUCH HAVING TRANSPARENT WINDOW WITH ANTI-COUNTERFEITING FEATURE

00: -

The present invention relates to a flexible package for providing security against counterfeiting. The flexible package includes a plurality of panels made of a flexible polymeric substrate, which further includes a front panel, a rear panel arranged in opposite to the front panel defining an interior space of the package and at least one longitudinal narrow window portion on at least one panel. A transparent polymeric strip is having a clear high barrier coating, is sealed over the window portion towards inner side of the panel overlapping the edges of the window portion but not overlapping the entire panel, a security feature is provided on the transparent strip on at least one of its surface at a predefined location or random places or all over the strip surface for securing the package against counterfeiting.

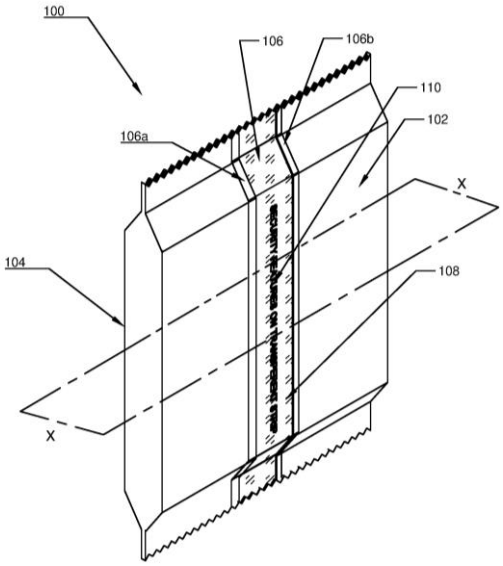

21: 2021/08947. 22: 2021/11/11. 43: 2023/08/11
51: A23B; A01N
71: LIQUIDSEAL HOLDING B.V.
72: MONSTER, VICTOR STEVEN, VAN DEN BERG, EUGENE ROBERT, GROENEWEGEN, GLENN GARETH
33: EP 31: 19172838.5 32: 2019-05-06

54: EDIBLE COATING COMPOSITION FOR COATING FRESH HARVEST PRODUCTS

00: -

The present invention relates to an edible composition for coating fresh harvest products and a harvest product coated with said composition. The invention also relates to a method for coating an harvest product. In addition, the invention relates to the use of said edible composition for the preparation of a post- harvest fruit or vegetable item with prolonged shelf life and/or slower weight loss compared to a fruit or vegetable item which is not coated with said composition and to the use of said edible composition for the preparation of a post-harvest cut flower with prolonged vase life when coated with said composition compared to a comparable cut flower which is not coated with said composition.

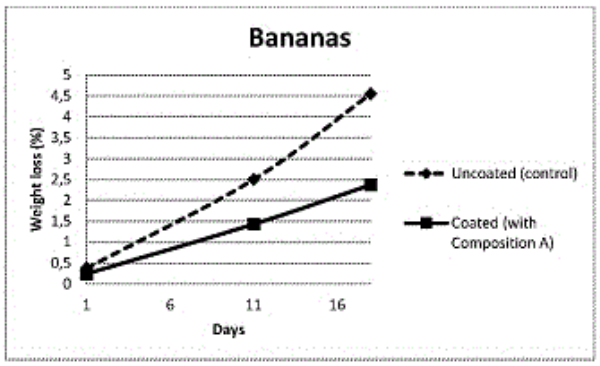

21: 2021/08948. 22: 2021/11/11. 43: 2023/08/11
51: B65G
71: LAITRAM, L.L.C.
72: TALSMA, CASPER FEDDE
33: US 31: 62/857,350 32: 2019-06-05

54: SELF-STACKING SPIRAL BELT CONVEYOR WITH SMOOTH DIAMETER REDUCTION

00: -

A spiral conveyor having a self-stacking conveyor belt positively driven on a helical path up or down a drive drum. Stacker supports at opposite sides of the belt support the tiers above. Locking structure on the outer stacker supports interlock consecutive tiers. Drive members on the drive drum have a belt entrance segment and a positive-drive segment. The positive-drive segment has ridges that engage the inner side of the belt without slip. The entrance segment provides a smooth reduction in drum diameter without drive ridges to multiple belt tiers entering the helical path.

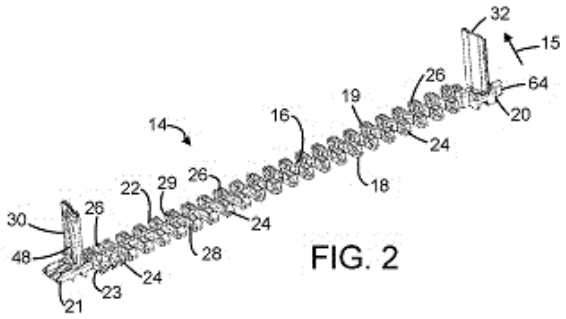

FIG. 2

21: 2021/08950. 22: 2021/11/11. 43: 2023/08/11
51: A61K
71: RVL PHARMACEUTICALS, INC.
72: DEVRIES, TINA, JACOBS, DAVID
33: US 31: 16/716,014 32: 2019-12-16
33: US 31: 62/844,069 32: 2019-05-06
33: US 31: 16/715,998 32: 2019-12-16
33: US 31: 62/843,819 32: 2019-05-06

54: OXYMETAZOLINE COMPOSITIONS AND METHODS FOR TREATING OCULAR DISORDERS

00: -

The present disclosure is directed to compositions comprising oxymetazoline and methods of stabilizing oxymetazoline compositions for long-term storage. The present disclosure is also directed to compositions comprising oxymetazoline and methods of treating various eye disorders related to drooping eyelids, such as ptosis, in a subject comprising administering to the subject compositions comprising oxymetazoline.

21: 2021/08963. 22: 2021/11/11. 43: 2023/08/11
51: E02F
71: CATERPILLAR INC.
72: PLOUZEK, JOHN M, VLAMINCK, MITCHELL C, FINCH, NOLAN S
33: US 31: 16/412,553 32: 2019-05-15

54: GROUND ENGAGING TOOL MONITORING SYSTEM

00: -

The electronic control unit (126) includes a memory (508) including computer executable instructions (510) for recognizing a ground engaging tool (134); and a processor (506) coupled to the memory (508) and configured to execute the computer executable instructions (510), the computer executable

instructions (510) when executed by the processor (506) cause the processor (506) to: determine a dimension of a ground engaging tool installed on a work tool (700); compare the determined dimension of the ground engaging tool installed on a work tool to the theoretical dimension of a new ground engaging tool installed on the work tool (702); and calculate the difference between the determined dimension and the theoretical dimension (704).

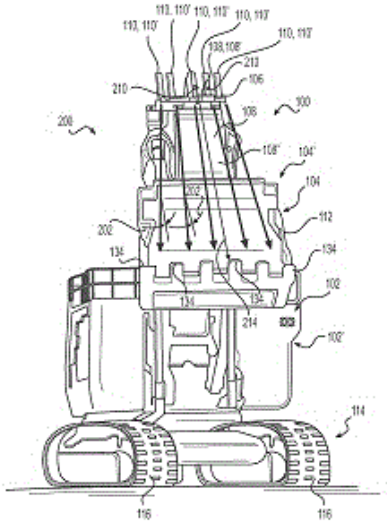

21: 2021/09014. 22: 2021/11/12. 43: 2023/08/11
51: H01Q; H04M; H04B
71: SAMSUNG ELECTRONICS CO., LTD.
72: JEON, SEUNGGIL, KIM, NAMWOO, HONG, SEONGBEOM, MOON, KYUNGHOON, LEE, YUNBUM
33: KR 31: 10-2020-0031173 32: 2020-03-13
33: KR 31: 10-2019-0056592 32: 2019-05-14

54: ANTENNA AND ELECTRONIC DEVICE INCLUDING THE SAME

00: -

An electronic device is provided. The electronic device includes a front cover, a rear cover, an array antenna, and a support member. The support member includes a conductive first portion forming a lateral appearance of the electronic device, a second portion adjacent to the array antenna, the front cover, and the conductive first portion, and having at least one opening filled with a non-conductive material, and a third portion including a non-conductive material and disposed adjacent to the array antenna, the rear cover, and the conductive first portion. The conductive first portion is exposed to an outside of the electronic device, and the second and third portions are hidden by the front and rear covers. A beam formed by the array antenna is radiated to the outside through the at least one opening and the third portion.

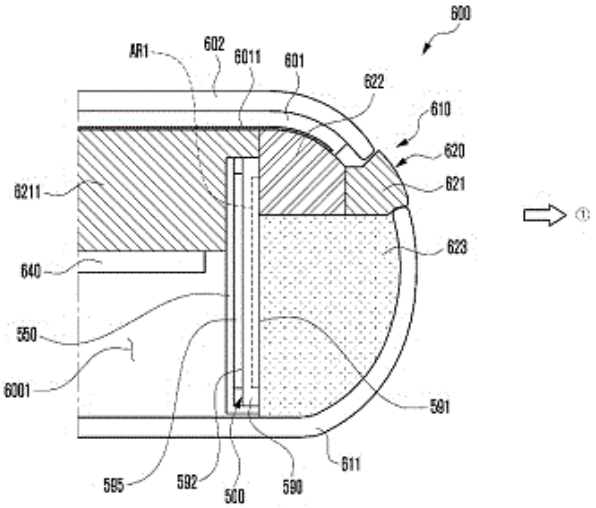

21: 2021/09015. 22: 2021/11/12. 43: 2023/08/10
51: G06F
71: SPORTS DATA LABS, INC.
72: GORSKI, MARK, KHARE, VIVEK, MIMOTO, STANLEY
33: US 31: 62/834,131 32: 2019-04-15
33: US 31: 62/912,210 32: 2019-10-08

54: MONETIZATION OF ANIMAL DATA

00: -

A system for monetizing animal data includes a source of animal data that can be transmitted electronically. Characteristically, the source of animal data includes at least one sensor. An intermediary server receives and collects the animal data such that collected data has attached thereto metadata. The metadata includes at least one of the origination of the animal data or personal attributes of individuals from which the animal data originated. The intermediary server provides requested animal data to a data acquirer for consideration. The requested animal data may include simulated animal data. The intermediary server will also distribute at least a portion of the consideration to at least one stakeholder. The intermediary server includes a single computer server or a plurality of interacting computer servers.

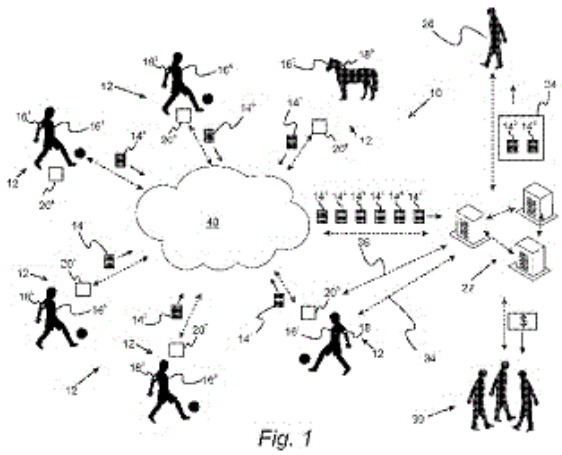

Fig. 1

21: 2021/09017. 22: 2021/11/12. 43: 2023/08/17
51: G06F
71: SPORTS DATA LABS, INC.
72: GORSKI, MARK, KHARE, VIVEK, MIMOTO, STANLEY
33: US 31: 62/833,970 32: 2019-04-15
33: US 31: 62/912,822 32: 2019-10-09
54: ANIMAL DATA PREDICTION SYSTEM
00: -
A speculation system for providing animal data and predictive indicators thereof includes one or more source sensors that collect animal data from targeted individuals. Characteristically, the animal data can be transmitted electronically. A computing subsystem receives the animal data. At least a portion of the animal data is transformed by the computing subsystem or the one or more sensors into a predictive indicator for a selected targeted individual or a group of targeted individuals. The computing subsystem operable to provide the predictive indicator and optionally at least a portion of the animal data to a user. Advantageously, a transmission subsystem providing transmission of the animal data to the computing subsystem.

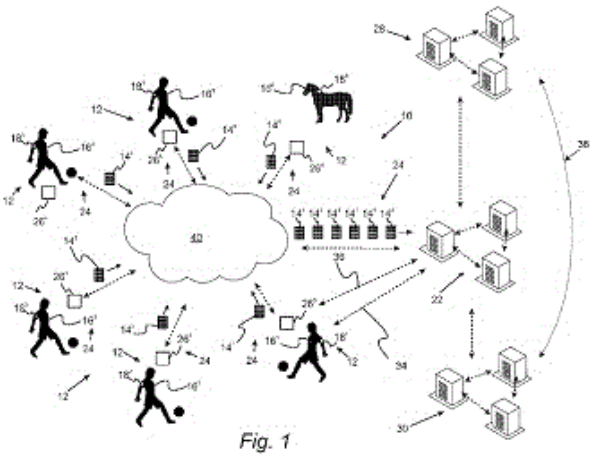

Fig. 1

21: 2021/09020. 22: 2021/11/12. 43: 2023/08/10
51: B22D
71: VESUVIUS GROUP, S.A.
72: RICHAUD, JOHAN, HEINBICHNER, WALDEMAR
33: EP 31: 19176155.0 32: 2019-05-23
54: CASTING NOZZLE
00: -
A casting nozzle (10) for use in the casting of molten metal produces a stable flow pattern having an elongated section in the horizontal plane. The bore (12) cross-sectional area contains, from entry (24) to exit (26, 28), at least two significant section area reductions to reduce turbulence, realign streamlines and affect flow distribution inside the nozzle. The bore cross-section has a local minimum value in a contraction section (40) located between the entry section (30) and an expansion section (50). Bore cross-sectional area decreases from the expansion section to the lower end of the nozzle. The two significant cross-sectional area reductions cooperate with other structures within the bore to stabilize flow.

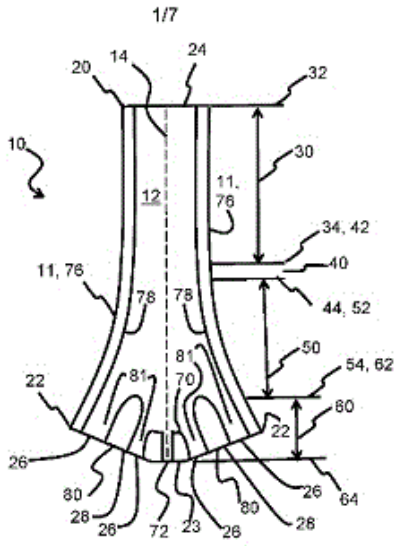

21: 2021/09022. 22: 2021/11/12. 43: 2022/06/28
51: C08B
71: LABORATORIOS FARMACÉUTICOS ROVI, S.A.
72: FRANCO RODRÍGUEZ, Guillermo, GUTIERRO ADURIZ, Ibon
33: ES 31: P201930373 32: 2019-04-26
33: CN 31: 202010078241.3 32: 2020-01-23
54: METHOD FOR OBTAINING LOW-MOLECULAR-WEIGHT HEPARINS BY MEANS OF TANGENTIAL FLOW FILTRATION
00: -
The invention relates to a method for obtaining low-molecular-weight heparins (LMWH) with a molecular weight distribution of 3.0-5.0 kDa, which comprises at least one step of concentrating by means of tangential flow filtration (TFF). The process is particularly useful for the preparation of bemiparin and enoxaparin without the use of fractional precipitation or the use of alcoholic solutions. In particular, the preparation of LMWH is achieved by means of the depolymerisation of heparin and the filtration (TFF diafiltration and/or ultrafiltration) of the depolymerised heparin without using fractional precipitation and without alcoholic solution.

21: 2021/09122. 22: 2021/11/16. 43: 2023/08/10
51: C07D
71: H. LUNDBECK A/S
72: JACOBSEN, MIKKEL FOG, JUHL, MARTIN, THERKELSEN, FRANS DENNIS, SØNDERGAARD, KÅRE, FRIHED, TOBIAS GYLLING
33: DK 31: PA 2019 00600 32: 2019-05-20
54: A PROCESS FOR THE MANUFACTURING OF (6AR,10AR)-7-PROPYL-6,6A,7,8,9,10,10A,11-OCTAHYDRO-[1,3]DIOXOLO[4',5':5,6]BENZO[1,2-G]QUINOLINE AND (4AR,10AR)-1-PROPYL-1,2,3,4,4A,5,10,10A-OCTAHYDRO-BENZO[G]QUINOLINE-6,7-DIOL
00: -
The present invention relates to a new process for manufacturing (6aR,10aR)-7-propyl-6,6a,7,8,9,10,10a,11-octahydro-[1,3]dioxolo[4',5':5,6]benzo[1,2-g]quinoline with formula (Ib), (4aR,10aR)-1-Propyl-1,2,3,4,4a,5,10,10a-octahydro-benzo[g]quinoline-6,7-diol with formula (I) and salts thereof. Both compounds are for use in the treatment of neurodegenerative diseases and disorders such as Parkinson's Disease. The invention also relates to new intermediate compounds of said process.

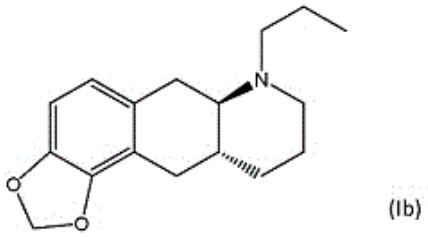

(Ib)

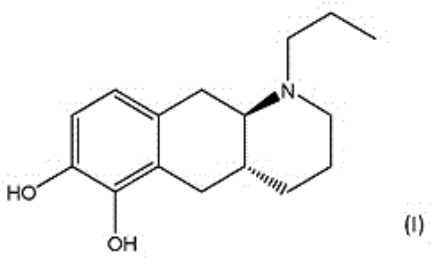

(I)

21: 2021/09124. 22: 2021/11/16. 43: 2023/08/10
51: C07D; A61P; A61K
71: BIOTHERYX, INC.
72: CHAN, KYLE W.H., ERDMAN, PAUL E, FUNG, LEAH, HECHT, DAVID AARON, CHOURASIA, APARAJITA HOSKOTE, LAM, IMELDA, MERCURIO, FRANK, SULLIVAN, ROBERT, TORRES, EDUARDO
33: US 31: 62/852,844 32: 2019-05-24
54: COMPOUNDS TARGETING PROTEINS AND PHARMACEUTICAL COMPOSITIONS THEREOF, AND THEIR THERAPEUTIC APPLICATIONS
00: -

The present disclosure provides compounds, for example, a compound of Formula (I), that modulate a protein function and/ or restore protein homeostasis. The disclosure provides a method of modulating a protein-mediated disease, disorder, condition, or response. Compositions, including in combination with other therapeutic agents, are provided.

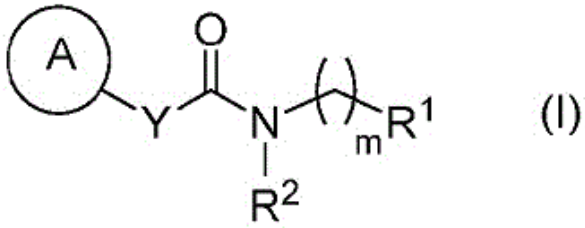

(I)

21: 2021/09179. 22: 2021/11/17. 43: 2023/08/16
51: A61P C07D A61K
71: UNIVERSITY OF DUNDEE
72: WOODLAND, Andrew, BELL, Mark
33: GB 31: 1905721.5 32: 2019-04-24
54: COMPOUNDS COMPRISING N-METHYL-2-PYRIDONE, AND PHARMACEUTICALLY ACCEPTABLE SALTS
00: -
The present invention concerns compounds comprising N-methyl-2-pyridone, and pharmaceutically-acceptable salts and compositions of such compounds. Such compounds are useful in anti-inflammatory and anti-cancer therapies. Therefore, the present invention also concerns such compounds for use as medicaments, particularly for the treatment of inflammatory diseases and oncology.

21: 2021/09192. 22: 2021/11/17. 43: 2023/08/10
51: A63B
71: VALDEUS, FRITZ
72: VALDEUS, FRITZ
33: US 31: 62/836,281 32: 2019-04-19
54: SYSTEM FOR TEAM BALL GAME HAVING INTERACTIVE GOAL BARRIERS
00: -
Systems and devices for a team game played on an obround court includes radially symmetric barriers defining cylindrical goals having circular openings concentric with the semicircles of the obround court. An annular halt zone extends around the barriers. A free throw line extends around each halt zone. An obround judge lane extends along the perimeter of the court and is occupied by two judges or referees that monitor the game, while another judge or referee remains inside the perimeter. The court is divided by a centerline which includes a circle at the center of the court. The outer wall of the barrier includes one or more video screens. Audience members can access a computer network to display images, text or video selected by them in real-time during gameplay. The ball used for the game has a surface texture provided by a plurality of square pebbles instead of rounded pebbles.

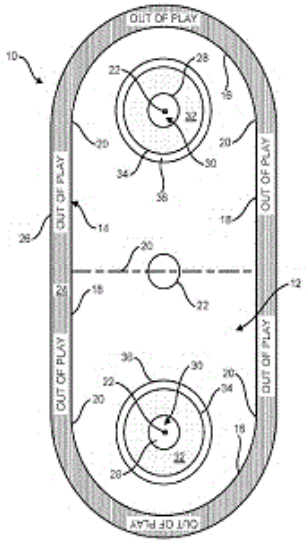

21: 2021/09195. 22: 2021/11/17. 43: 2023/08/10
51: C11D
71: UNILEVER GLOBAL IP LIMITED
72: BATCHELOR, STEPHEN NORMAN, BENNETT, JULIE, BEST, JONATHAN, THORLEY, DAVID CHRISTOPHER
33: EP 31: 19183203.9 32: 2019-06-28
54: DETERGENT COMPOSITION
00: -
The present invention concerns a detergent composition, comprising: (a) from 1.5 to 30 wt.%, of an anionic surfactant; (b) from 3 to 20 wt.% of a saturated or monosaturated linear C16 and/or C18 ether sulfate with mole average of 5 to 13, preferably 7 to 13 ethoxylate groups; (c) from 1 to 5 wt.% of a nonionic surfactant; (d) from 0.5 to 15 wt.% of polymeric cleaning boosters selected from antiredeposition polymers, soil release polymers and mixtures thereof, and wherein the anionic surfactant

a) is a non-ether sulfate anionic surfactant; and to a domestic method of treating a textile.

21: 2021/09196. 22: 2021/11/17. 43: 2023/08/10
51: G06Q
71: PHOS SERVICES LTD
72: MARTINOVA, ANTONINA IVANOVA, NEDELCHEV, DIYAN STEFANOV, GUEORGUIEV, IVO ALEXANDROV
33: EP 31: 19184193.1 32: 2019-07-03
54: SECURE PAYMENT TRANSACTIONS
00: -
A client comprising an application for secure payment transactions is provided. The application runs on a personal mobile communication device and the client accesses a service provided by a server, which includes a payment gateway. Various security measures are included in the client-server communication related to executing payment transactions in a secure environment.

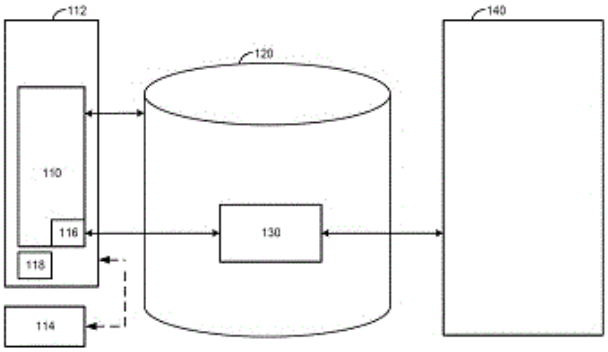

21: 2021/09197. 22: 2021/11/17. 43: 2023/08/10
51: A45D
71: UNILEVER GLOBAL IP LIMITED
72: CHALKE, ANUP KISAN
33: EP 31: 19180513.4 32: 2019-06-17
54: A HAIR OIL APPLICATOR
00: -
Disclosed is a hair oil applicator comprising: (a) a container (1) comprising a base (2), upwardly extending walls (3) therefrom, threaded portion (4) at the upper end of the container and a top surface comprising a flat resilient member (5); (b) a closure cum dispenser (6) comprising a cylindrical cap (7), said cap comprising counter threads (8) on the inner side thereof capable of screw engagement with the threaded portion (4) of the container; (c) said cylindrical cap comprising an elongated horizontally placed distributor tube (9) on the top surface thereof; and said distributor tube comprising plurality of upwardly extending nozzles (10) configured to dispense the oil from the container; characterized in that the resilient member comprises an upwardly extending breakable tab (11) which when broken ensures that the distributor tube is in fluid communication with the oil in the container; and said cylindrical cap comprising an inner cylindrical stopper (12) and an outer cylindrical stopper (13) on the inner side thereof; said inner cylindrical stopper (12) capable of providing leakproof sealing for the oil when the closure-cum-dispenser (6) is screwed on tightly to the container (1); and said outer cylindrical stopper (13) capable of sitting flush against the perimeter of the top surface; thereby ensuring that the hair oil applicator is leak-proof around the threaded joints; and providing uniform dispensing of the oil through the nozzles (10).

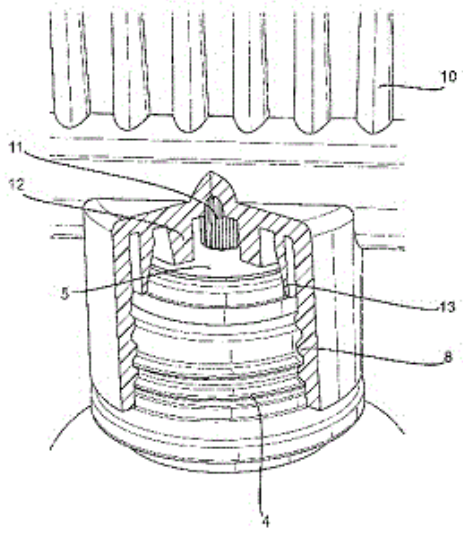

21: 2021/09255. 22: 2021/11/18. 43: 2023/08/10
51: C21D; C22C
71: JFE STEEL CORPORATION
72: ARATANI, MASATOSHI, ISHIKAWA, KAZUTOSHI, MATSUI, RYOJI, KONDOU, TOMONORI
33: JP 31: 2019-090627 32: 2019-05-13
54: ELECTRIC-RESISTANCE-WELDED STEEL PIPE OR TUBE FOR HOLLOW STABILIZER
00: -
Provided is an electric-resistance-welded steel pipe or tube for hollow stabilizer where the formation of not only a ferrite decarburized layer but also a total

decarburization layer can be suppressed even when heat treatment is performed in the air so that a hollow stabilizer having excellent fatigue resistance can be obtained. The electric-resistance-welded steel pipe or tube for hollow stabilizer has a predetermined chemical composition, and the depths of total decarburized layers on an inner surface and on an outer surface are 100 mm or less.

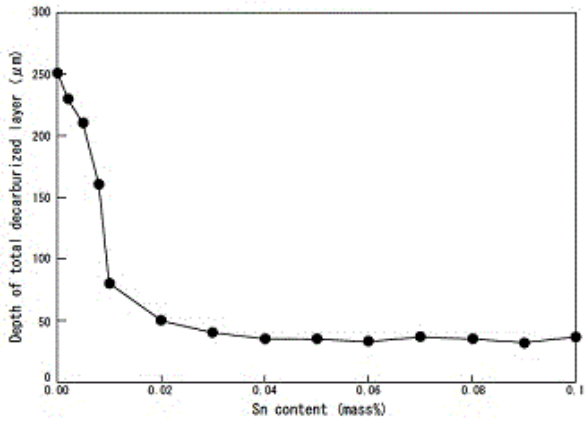

21: 2021/09256. 22: 2021/11/18. 43: 2023/08/11
51: C22B; H01M
71: UMICORE
72: VERHEES, PIETER, KLAASEN, BART, CALLEBAUT, WILLEM
33: EP 31: 19170392.5 32: 2019-04-19
54: PROCESS FOR THE PREPARATION OF BATTERY PRECURSORS
00: -
The invention concerns a process for the recovery of metals such as Ni and Co from a Li-containing starting material. In particular, this process concerns the recovery of metals M from a Li-containing starting material, wherein M comprises Ni and Co, comprising the steps of: Step 1: Providing said starting material, comprising Li-ion batteries or their derived products; Step 2: Removing Li in an amount of more than the maximum of (1) 30% of the Li present in said starting material, and (2) a percentage of the Li present in said starting material determined to obtain a Li:M ratio of less than 0.70 in a subsequent acidic leaching step; Step 3: Subsequent leaching using relative amounts of Li-depleted product and a mineral acid, thereby obtaining a Ni-and Co-bearing solution; and, Step 4: Crystallization of Ni, Co, and optionally Mn. Due to the lower reagent consumption and higher Ni and/or Co concentration during hydrometallurgical processing, the invention is an efficient and economic process for the production of crystals suitable for battery material production.

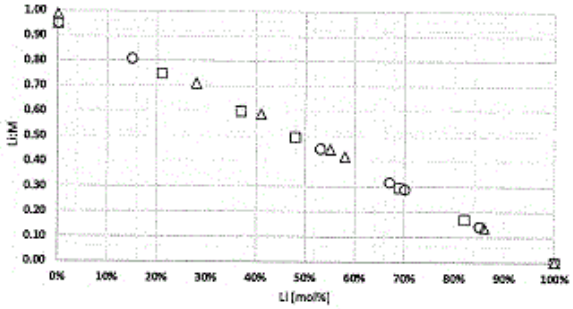

21: 2021/09257. 22: 2021/11/18. 43: 2023/08/11
51: C22B; H01M
71: UMICORE
72: OOSTERHOF, HARALD, SCOYER, JEAN, SCHEUNIS, LENNART, KLAASEN, BART, CALLEBAUT, WILLEM
33: EP 31: 19170392.5 32: 2019-04-19
54: PROCESS FOR THE PREPARATION OF PRECURSOR COMPOUNDS FOR LITHIUM BATTERY CATHODES
00: -
The present disclosure concerns the production of precursor compounds for lithium battery cathodes. Batteries or their scrap are smelted in reducing conditions, thereby forming an alloy suitable for further hydrometallurgical refining, and a slag. The alloy is leached in acidic conditions, producing a Ni- and Co-bearing solution, which is refined. The refining steps are greatly simplified as most elements susceptible to interfere with the refining steps concentrate in the slag. Metals such as Co, Ni and Mn are then precipitated from the solution, forming a suitable starting product for the synthesis of new battery precursor compounds.

21: 2021/09301. 22: 2021/11/19. 43: 2023/08/16
51: H01M
71: Cougar Creek Technologies, LLC
72: WEI, Kui, LI, Liyu
33: US 31: 62/849,959 32: 2019-05-20
54: REDOX FLOW BATTERY SYSTEMS AND METHODS OF MANUFACTURE AND OPERATION
00: -
A system includes a redox flow battery system that includes an anolyte, a catholyte, a first half-cell

having a first electrode in contact with the anolyte, a second half-cell having a second electrode in contact with the catholyte, and a first separator separating the first half-cell from the second half-cell. The system also includes a balance arrangement that includes a balance electrolyte having vanadium ions in solution, a third half-cell having a third electrode in contact with the anolyte or the catholyte, a fourth half-cell having a fourth electrode in contact with the balance electrolyte, and a reductant in the balance electrolyte or introducible to the balance electrolyte for reducing dioxovanadium ions.

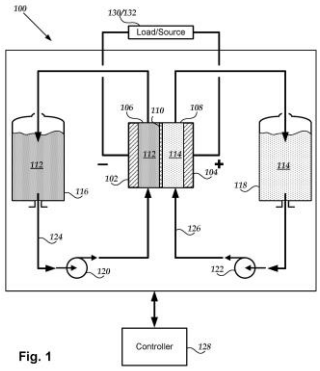

Fig. 1

21: 2021/09313. 22: 2021/11/19. 43: 2023/08/11
51: F16C; B65G
71: SKF AUSTRALIA PTY LTD
72: KENWORTHY, DARREN, VARADARAJAN, RAMESH
33: DE 31: 10 2019 207 156.2 32: 2019-05-16
54: SPLIT PLUMMER BLOCK BEARING HOUSING
00: -
The invention relates to a split plummer block bearing housing (1) for a rotatable shaft (13) comprising a detachable housing cap (2) having at least one housing grease channel (3), and at least one seal assembly (4), wherein the at least one seal assembly (4) comprises a stationary part (5) mounted on the housing (1) and a rotating part (6) intended to be mounted on the shaft (13), the stationary part (5) having a seal grease channel (7), the stationary part (5) and the rotating part (6) are designed to cooperate with each other as a labyrinth and/or contacting seal, wherein the housing grease channel (3) and the seal grease channel (7) connect and form an extension of each other.

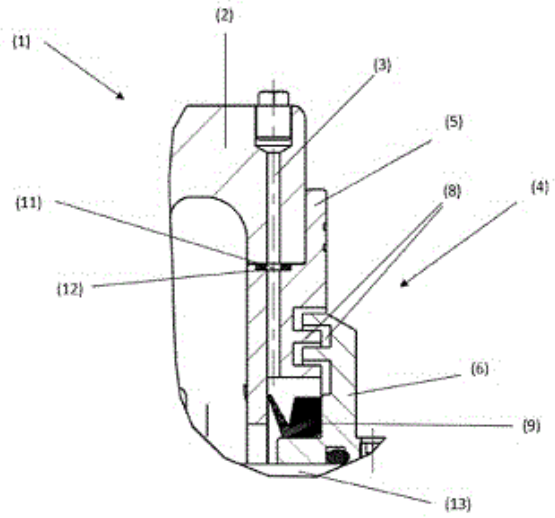

21: 2021/09316. 22: 2021/11/19. 43: 2023/08/11
51: C11D
71: UNILEVER GLOBAL IP LIMITED
72: BATCHELOR, STEPHEN NORMAN, BURNHAM, NEIL STEPHEN
33: EP 31: 19183228.6 32: 2019-06-28
54: DETERGENT COMPOSITION
00: -
The invention concerns a detergent composition, comprising: (a) from 0.0005 to 0.5 wt.% of a lipid esterase enzyme; (b) from 2 to 25 wt.% of an alcohol ether sulfate of formula R- $(OCH_2CH_2)_nOSO_3H$ where n is from 5 to 15, preferably from 6 to 15, more preferably from 7 to 15, most preferably 7 to 12; and (c) from 0.2 to 50 wt.%, of surfactant other than the surfactant specified in (b); also the invention concerns a domestic method of treating a textile; and the use of an alcohol ether sulfate of formula R-$(OCH_2CH_2)_nOSO_3H$ where R is saturated or monounsaturated linear C16 and/or C18 alkyl chain and where n is from 7 to 15, preferably 8 to 12, to reduce the amount of lipase left in fats on garments after the wash.

21: 2021/09358. 22: 2021/11/22. 43: 2023/08/10
51: A61K; A61Q
71: UNILEVER GLOBAL IP LIMITED
72: MACHEN, ROBERT, MOGHADAM, ARASH MOHAJER, MUSCAT, JOSEPH, RILEY, ROBERT GEORGE, STARCK, PIERRE
33: EP 31: 19181766.7 32: 2019-06-21
54: CLEANSING COMPOSITION
00: -

An aqueous, sulphate free shampoo composition for hair and scalp comprising:- a. a pre-formed emulsified silicone; b. a cationic deposition polymer; c. a hair substantive cationic conditioning polymer which is an APTAC polymer having a molecular weight of less than 1 million Daltons, preferably selected from a homopolymer of (3-acrylamidopropyl) trimethyl ammonium chloride and a (3- acrylamidopropyl) trimethyl ammonium chloride/acrylamide copolymer; d. a total amount of anionic surfactant, amphoteric surfactant and zwitterionic surfactant consisting of: (i) from 3 wt % to 13 wt %, by weight of the total composition at 100 % activity, of an alpha olefin sulfonate anionic surfactant of general formula (I): R^1-CH=CH-CH_2-SO_3^- M^+ (I) in which R^1 is selected from linear or branched alkyl groups having from 11 to 13 carbon atoms and mixtures thereof; and M is a solubilizing cation; (ii) from 1 to 6%, by weight of an amphoteric or zwitterionic surfactant, selected from an alkyl betaine of general formula (II) R^2-$N^+(CH_3)_2$-CH_2-COO^-M^+ (II) wherein R^2 = C12 (Lauryl) or Coco derived; an alkyl hydroxy sultaine of general formula (III), R^3-$N^+(CH_3)_2$-CH_2-CH(OH)-CH_2-SO_3 M^+ (III) wherein R^3 = C12 (Lauryl) or Coco derived; an alkyl aminopropyl hydroxy sultaine of general formula (IV), R^4-CO-NH-$(CH_2)_3$-$N^+(CH_3)_2$-CH_2-CH(OH)-CH_2-$SO_3^-M^+$ (IV) wherein R^4 = C12 (Lauryl) or Coco derived; an alkyl amphoacetate of general formula (V), R^5-CO-NH-$(CH_2)_2$-$N(CH_2$-CH_2-OH)(CH_2-COO^- M^+) (V) wherein R^5 = C12 (Lauryl) or Coco derived; and mixtures thereof; and e. a suspending agent in which the weight ratio of (i) to (ii) ranges from 1:1 to 6:1 and the pH of the composition is from 3 to 6.5; and wherein the composition has a viscosity from 3,500 to 15,000 mPa.s, preferably from 4,000 to 12,000 mPa.s when measured using a Brookfield V2 viscometer using a spindle RTV5, for 1 minute at 20rpm at 30°C. results in superior deposition and retention of silicone on hair.

21: 2021/09360. 22: 2021/11/22. 43: 2023/08/10
51: A61K; A61P
71: FIREBRICK PHARMA LIMITED
72: MOLLOY, PETER, GOODALL, STEPHEN
33: AU 31: 2019902006 32: 2019-06-10
33: AU 31: 2020900489 32: 2020-02-20

54: PREVENTION OF INFECTION BY HIGHLY PATHOGENIC VIRUSES USING TOPICAL APPLICATION OF POVIDONE-IODINE ON MUCOUS MEMBRANES

00: -

This invention is directed to methods for prevention of infections by highly pathogenic (HP) viruses by applying to the nasal mucous membranes a topical preparation comprising the broad-spectrum antimicrobial agent povidone-iodine (PVP-I). Said viruses include SARS and MERS Coronaviruses, such as SARS-CoV-2 (which causes COVID-19), Filoviridae such as Ebola Virus (EBOV), Marburg Virus (MARV), Sudan Virus (SUDV), Tai Forest Virus (TAFV) and Bundibugyo Virus (BDBV), pandemic influenza viruses such as H5N1, H5N9, H7N3, H7N7, H9N2 and H1N1, and Arenaviridae that cause Lassa fever, Junin and Machupo, Bunyaviridae that cause Crimean-Congo haemorrhagic fever, Rift Valley Fever, Hantaan haemorrhagic fevers, and Flaviviridae that cause yellow fever, dengue, Omsk haemorrhagic fever, Kyasanur forest disease. The present invention further relates to a method of decreasing secondary infections from a primary HP viral infection, caused by bacteria or fungus such as Mycoplasma pneumoniae, S. aureus, K. pneumoniae, S. pneumoniae, M. catarrhalis, P. aeruginosa, S. pyogenes, or Streptococcus agalactiae.

21: 2021/09361. 22: 2021/11/22. 43: 2023/08/10
51: C11D
71: UNILEVER GLOBAL IP LIMITED
72: BATCHELOR, STEPHEN NORMAN, BENNETT, JULIE, BEST, JONATHAN, THORLEY, DAVID CHRISTOPHER
33: EP 31: 19183240.1 32: 2019-06-28

54: DETERGENT COMPOSITION

00: -

A detergent composition, comprising: (a) from 2 to 25 wt.% of an alcohol ether sulfate of formula R_1-$(OCH_2CH_2)_mOSO_3H$ where R_1 is saturated or monounsaturated, preferably saturated, linear C12 and/ or C14 alkyl chain and where m is from 1 to 4; and, (b) from 2 to 25 wt.% of an alcohol ether sulfate of formula R_2-$(OCH_2CH_2)_nOSO_3H$ where R_2 is saturated or monounsaturated linear C16 and/or C18 alkyl chain and where n is from 5 to 20; wherein the weight ratio of (a) to (b) is from 5:1 to 1:8. A domestic method of treating a textile with an aqueous solution of 0.5 to 20 g/L of said detergent composition.

21: 2021/09362. 22: 2021/11/22. 43: 2023/08/11
51: B62D
71: CATERPILLAR INC.
72: LONGANBACH, DAVID
33: US 31: 16/422,581 32: 2019-05-24
54: MASTER LINK FOR A TRACK CHAIN
00: -
A master link (120) for a track chain is disclosed. The master link includes a first portion (240) that abuts a first face (230) of the link, a second portion (270) that abuts a second face (260) of the link, a first bore (210-1) located on a first end of the link, a second bore (210-2) located on a second end of the link, and a material (280) located between the first portion (240) and the second portion (270) and extending between the first bore and the second bore. The material (280) creates a separation between the first portion and the second portion to facilitate placement of the first bore and the second bore around outer diameters of corresponding mating members of a track chain. The material is removable to remove the separation from between the first portion and the second portion.

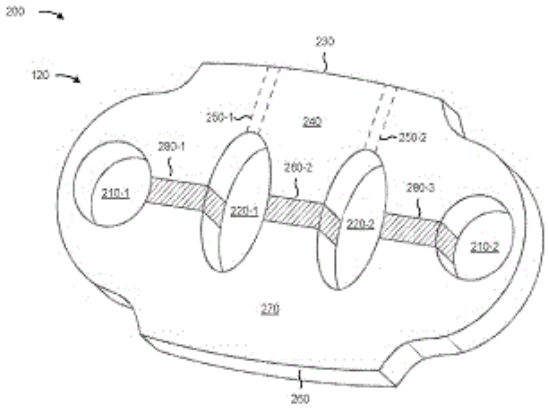

21: 2021/09437. 22: 2021/11/23. 43: 2023/08/11
51: F04B; H02K
71: MOTOR COMPONENTS, LLC
72: DEPUE, MICHAEL ROBERT, SEAGER, SR., KENNETH FRED
33: US 31: 62/854,368 32: 2019-05-30
54: FUEL PUMP
00: -
A fuel pump, including a case, including a first section including a hub and a hole, a second section circumferentially arranged around the first section, wherein a radial space is arranged between the first section and the second section, an inlet in fluid communication with the radial space, a housing chamber arranged adjacent to the first section, and an outlet in fluid communication with the hole, a filter bowl removably connected to the second section, the filter bowl fluidly connecting the radial space with the hole, a valve assembly arranged at least partially in the first section and at least partially in the housing chamber, and a coil operatively arranged to apply a magnetic field to the valve assembly to selectively displace fluid therethrough.

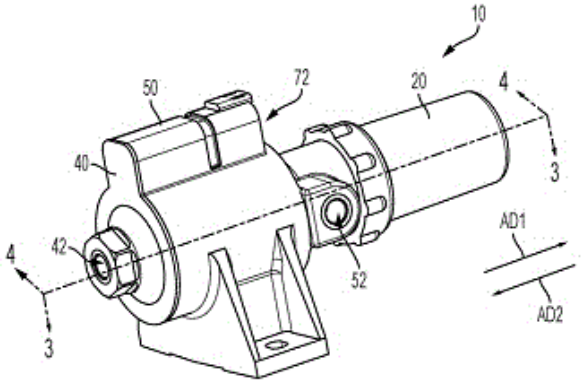

21: 2021/09518. 22: 2021/11/24. 43: 2023/08/10
51: C07D; A61P; A61K
71: THE REGENTS OF THE UNIVERSITY OF MICHIGAN
72: WANG, SHAOMENG, REJ, ROHAN, WANG, CHANGWEI, WANG, MI, LU, JIANFENG, YANG, CHAO-YIE, FERNANDEZ-SALAS, ESTER, STUCKEY, JEANNE
33: US 31: 62/944,608 32: 2019-12-06
33: US 31: 62/874,606 32: 2019-07-16
54: IMIDAZOPYRIMIDINES AS EED INHIBITORS AND THE USE THEREOF
00: -
The present disclosure provides compounds represented by Formula (I) wherein R^1, R^2, R^3, and $R^4$are as defined in the specification, and the salts and solvates thereof. Compounds of Formula (I) are FED inhibitors. FED inhibitors are useful for the treatment of cancer and other diseases.

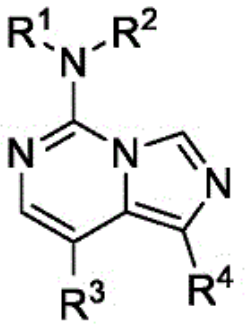

(I)

21: 2021/09577. 22: 2021/11/25. 43: 2023/08/16
51: C08J C08B C08L
71: WORN AGAIN TECHNOLOGIES LIMITED
72: WALKER, Adam, REID, Joshua, E.S., HAURU, Lauri
33: GB 31: 1906154.8 32: 2019-05-02
54: RECYCLING PROCESS
00: -
The present invention provides a process for separating cellulose from a feedstock, comprising the steps of: a) wetting the cellulose with a first solvent system to form wet cellulose; b) contacting the wet cellulose with a second solvent system to form a mixture; c) maintaining the mixture at a first temperature for a first period of time; d) maintaining the mixture at a second temperature for a second period of time to dissolve the cellulose; and e) removing the first and second solvent system containing the dissolved cellulose.

21: 2021/09591. 22: 2021/11/25. 43: 2023/08/10
51: C25C
71: PERMASCAND AKTIEBOLAG
72: ZIMMERMAN, ERIK, ALMROTH, CHRISTIAN, GUSTAVSSON, JOHN, SJÖDELL, PER MAGNUS
33: EP 31: 19177908.1 32: 2019-06-03
54: AN ELECTRODE ASSEMBLY FOR ELECTROCHEMICAL PROCESSES
00: -
The invention is related to an electrode assembly (1) for an electrochemical process comprising a current supply device (2, 3), an elongated current distribution bar (4-7) comprising first and second ends (10, 12), and a sheet-shaped electrode substrate (8, 9) attached to the current distribution bar and having a longitudinal extension and a lateral extension. The current distribution bar comprises a first portion (14) attached to the current supply device, a second portion (15) extending along the electrode substrate, and a third portion (16) extending between the first and second portions. The current distribution bar is bent between its first and second ends, and the current supply device is laterally and longitudinally positioned beyond the electrode substrate. The second portion at least partly extends longitudinally along the electrode substrate.

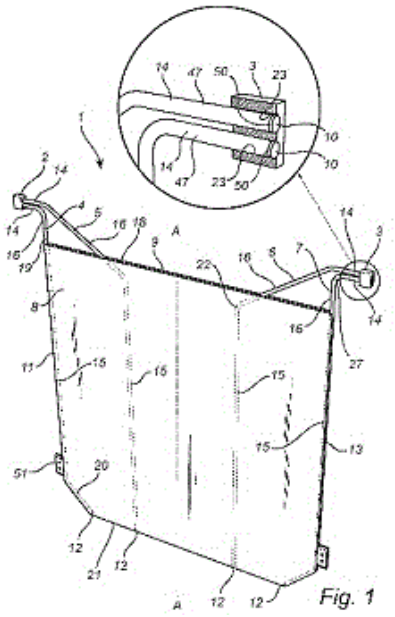

Fig. 1

21: 2021/09593. 22: 2021/11/25. 43: 2023/10/10
51: C11D
71: UNILEVER GLOBAL IP LIMITED
72: BATCHELOR, STEPHEN NORMAN, BENNETT, JULIE, BEST, JONATHAN, THORLEY, DAVID CHRISTOPHER
33: EP 31: 19183331.8 32: 2019-06-28
54: DETERGENT COMPOSITION
00: -
The invention concerns a detergent composition containing less than 1 wt.% of phosphate, comprising: (a) from 2 to 25 wt.% of an alcohol ethoxylate of formula R_1-$(OCH_2CH_2)_mOH$ where $R_1$is selected from saturated or monounsaturated linear C16 and/or C18 alkyl chains and where m is from 6 to 40; and, (b) from 2 to 25 wt.% of an alcohol ether sulfate of formulaR_2-$(OCH_2CH_2)_nOSO_3H$ where $R_2$is saturated or monounsaturated linear C16 and/or C18 alkyl chain and n is from 5 to 20; wherein the

mole ratio of (a) to (b) is from 9:1 to 1:9; the invention also concerns a domestic method of treating a textile.

21: 2021/09594. 22: 2021/11/25. 43: 2023/08/10
51: B22D
71: REFRACTORY INTELLECTUAL PROPERTY GMBH & CO. KG
72: RENGGLI, RAPHAEL
33: EP 31: 19184212.9 32: 2019-07-03
54: DEVICE FOR MANIPULATING PREFERABLY A CASTING TUBE IN A CHANGING DEVICE AT THE SPOUT OF A METALLURGICAL VESSEL
00: -
In the case of a device for manipulating preferably a casting tube (7) in a changing device (8) at the spout of a metallurgical vessel, this manipulation is performed by means of a robot (10). This robot has an attachable base (9), a carrying arm (12) that can pivot on the base and at least one extension arm (13) that is mounted rotatably on the carrying arm and has a gripper (14), preferably for the casting tube (7). The base (9) of the robot (10) is attached alongside the vessel in such a way that the carrying arm (12) can be pivoted to the side of the vessel into a downwardly directed position and the at least one extension arm (13) mounted on the carrying arm can be moved along the underside of the vessel. This provides optimum placement of the robot, and consequently of the device, and so they do not impede access for personnel to the tundish on the casting platform during casting and the corresponding manipulations, such as changing the casting tube, can be carried out very easily and operationally reliably with the device in an automated manner.

Fig. 1

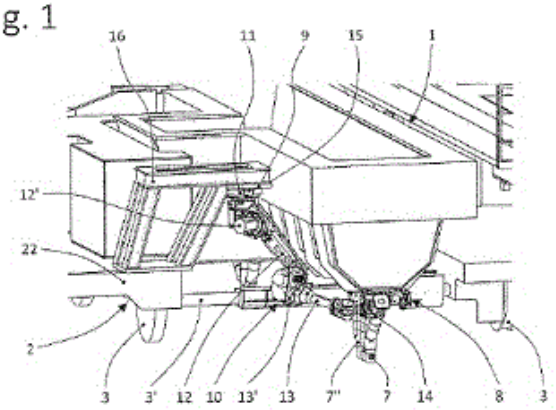

21: 2021/09597. 22: 2021/11/25. 43: 2023/08/11
51: A61K; A61P
71: OCULIS OPERATIONS SÀRL
72: LOFTSSON, THORSTEINN, FÜLÖP, ZOLTÁN
33: EP 31: 19183719.4 32: 2019-07-01
33: EP 31: 20174202.0 32: 2020-05-12
54: METHOD FOR STABILIZING THE PH OF AN AQUEOUS COMPOSITION COMPRISING A DRUG
00: -
The present disclosure relates to a method for stabilizing the pH of an aqueous composition comprising a drug which is prone to oxidation, said method comprising the addition of an additive to prevent oxidation of the drug which is prone to oxidation. In particular, the present disclosure relates to a method for stabilizing the pH of an aqueous composition comprising a corticosteroid, said method comprising the addition of an additive to prevent oxidation of the corticosteroid. The present disclosure also relates to a composition comprising a corticosteroid and an additive to prevent oxidation of the corticosteroid.

21: 2021/09642. 22: 2021/11/26. 43: 2023/08/11
51: B65D
71: B & T PRODUCTS LTD.
72: TAYLOR, PETER, BUTLER, JAMES
33: GB 31: 1919319.2 32: 2019-12-24
33: GB 31: 1906032.6 32: 2019-04-30
54: A FUEL CONTAINER
00: -
A fuel container comprises: a body defining a volume for receiving fuel. The body has an inlet and optionally a vent. The inlet extends upwards as a spout and has a threaded collar which is closed by a threaded cap. A gas expansion pathway is provided

between the inlet and the vent. The spout has a guide for receiving and locating a dog-leg portion of a fuel dispenser nozzle. A restriction in the throat of the spout prevents the fuel dispenser nozzle being inserted beyond a preselected distance into the container thereby preventing backwash and spillage.

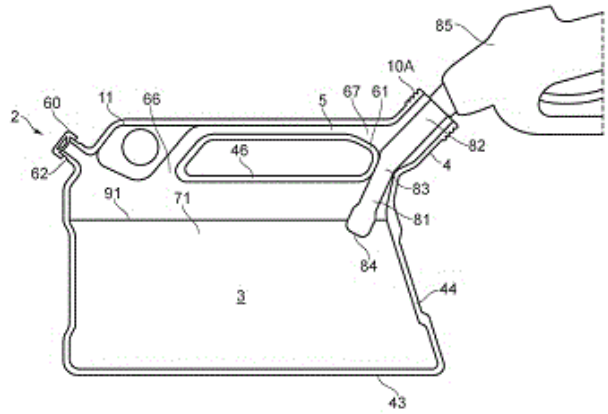

21: 2021/09643. 22: 2021/11/26. 43: 2023/08/11
51: G21B; G21F; H05K
71: LOCKHEED MARTIN CORPORATION
72: HEINRICH, JONATHON ROBERT, GARRETT, MICHAEL LANE, MCGUIRE, THOMAS JOHN, FONT, GABRIEL IVAN
33: US 31: 16/509,286 32: 2019-07-11
54: SHIELDING STRUCTURES IN PLASMA ENVIRONMENT
00: -
A plasma confinement system includes an enclosure, one or more internal magnetic coils suspended within the enclosure in a plasma region, and one or more supports configured to support the one or more internal magnetic coils suspended within the enclosure. Each support of the one or more supports includes a first end and a second end opposite the first end. The first end is coupled to an interior portion of the enclosure and the second end is coupled to a component disposed within the plasma region. Each support further includes electrical conducting material disposed between the first end and the second end. The electrical conducting material is configured to, when supplied with one or more electrical currents, generate a magnetic field having a magnetic field gradient that varies along the support from the first end to the second end.

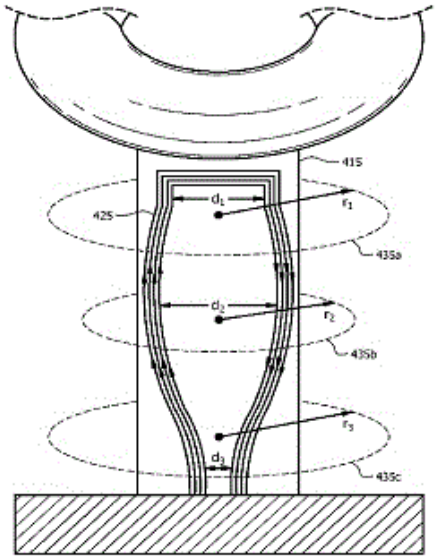

21: 2021/09645. 22: 2021/11/26. 43: 2023/08/11
51: A61K; A61Q
71: UNILEVER GLOBAL IP LIMITED
72: ROSA, JOSE GUILLERMO, MOADDEL, TEANOOSH
33: EP 31: 19186082.4 32: 2019-07-12
54: STABILIZATION OF RESORCINOL COMPOUNDS IN COSMETIC COMPOSITIONS
00: -
Topical cosmetic compositions containing a 4-substituted resorcinol derivative along with N-acetyl methionine exhibit improved storage stability and oxidative stability. A method of stabilizing 4-ethyl resorcinol or 4-hexyl resorcinol in a composition comprising a cosmetically acceptable vehicle by adding to the composition Acetyl Methionine in an amount sufficient to stabilize said 4-ethyl resorcinol or 4-hexyl resorcinol. Use of the N-Acetyl Methionine and stabilized 4-substituted resorcinol derivatives in the manufacture of a topical cosmetic composition.

21: 2021/09794. 22: 2021/11/30. 43: 2023/08/11
51: B01J
71: ENERKEM INC.
72: GIL, JENNIFER, FUENTE-HERNANDEZ, ARIADNA, MARIE-ROSE, STÉPHANE C
33: US 31: 62/853,344 32: 2019-05-28
54: VAPOR PHASE METHANOL CARBONYLATION CATALYST
00: -
The present disclosure provides a catalyst for use in a process for methyl acetate and acetic acid production from renewable methanol and synthesis

gas. The catalyst comprises at least a metal as an active site for the vapor phase carbonylation reaction, including those from the group VIII and lanthanides series of the periodic table and could be alone or mixed. The support comprises an activated carbon with a high surface area.

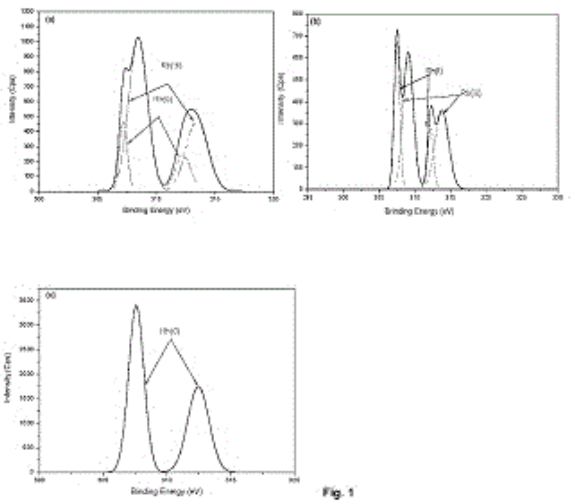

Fig. 1

21: 2021/09831. 22: 2021/12/01. 43: 2023/08/11
51: A61K; A61Q
71: UNILEVER GLOBAL IP LIMITED
72: ROCHA, SHEILA ALVES, CHIANG, CHUNG-YI, ROSA, JOSE GUILLERMO, NIP, JOHN CHUN-SING
33: EP 31: 19186091.5 32: 2019-07-12
54: BIOENERGETIC COMBINATIONS AND METHODS OF USING SAME
00: -
Topical personal care compositions for improving cellular energy efficiency by protecting skin from mitochondrial fragmentation that takes place in the cells of an aging individual in need thereof. Use of a topical personal care composition comprising niacinamide and of one or more cooperative skin benefit agents for reducing cellular mitochondrial fragmentation, which cooperative agents are selected from the group consisting of 1-methylnicotinamide chloride, N-acetylmethionine, mixtures thereof, and derivatives thereof. Use of niacinamide and cooperative skin benefit agent selected from 1-methylnicotinamide chloride, N-acetylmethionine, mixtures thereof, and derivatives thereof in the manufacture of a topical personal care composition for decreasing or preventing mitochondrial fragmentation in skin cells and for increasing skin cellular energy.

21: 2021/09833. 22: 2021/12/01. 43: 2023/08/11
51: D21C; C08B
71: VALMET AB
72: LAMMI, LARI, KARVONEN, JOUNI, MINNAAR, SUSANNA, LANDMAN, HUNPHREY, COETZEE, BERDINE, WAUTS, JOHANN
33: SE 31: 1950785-4 32: 2019-06-26
54: METHOD FOR EXTRACTING HEMICELLULOSE FROM LIGNOCELLULOSIC MATERIAL
00: -
The present invention relates to a method for extracting hemicellulose from lignocellulosic material, the method comprising: a) providing (11) lignocellulosic material in a digester, b) supplying (12) steam to the digester, c) performing (13) hydrolysis of the lignocellulosic material in the digester until a first P-factor is reached, d) supplying (14) a first liquid to the digester for mixing with the lignocellulosic material, wherein a total volume of the first liquid is at least equal to a volume required to cover the lignocellulosic material in the digester after the hydrolysis of step c), wherein the first liquid is water or condensate, and e) draining (15) the first liquid from the digester for extracting hemicellulose from the lignocellulosic material, wherein the supplying of liquid in step d) takes less than 15 minutes, preferably less than 10 minutes, and wherein the draining of the first liquid during step e) is performed in less than 15 minutes, preferably less than 10 minutes.

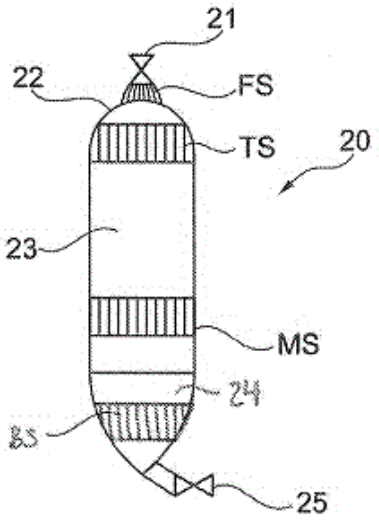

21: 2021/09853. 22: 2021/12/01. 43: 2023/08/11
51: C07K
71: STRAINCHEM
72: YOUTE TENDOUNG, JEAN-JACQUES, SERRE, AUDREY
33: FR 31: 1904604 32: 2019-05-02
54: METHOD FOR PRODUCING PEPTIDES OR PROTEINS OR PEPTIDOMIMETICS
00: -
A process for synthesizing peptides or proteins or peptidomimetics by successive elongation, with units, of the second end (primary or secondary amine function, hydroxyl function or thiol function) of a peptide or protein or peptidomimetic chain, characterized in that: said units are selected from the group made up of: α, β or γ-amino acids, α, β or γ-hydroxy acids and α, β or γ-mercapto acids (natural or unnatural or synthetic), the molecules having at least two functional groups; - the first end of said peptide or protein or peptidomimetic is bonded by a covalent bond to an anchoring molecule that is soluble in organic solvents such as halogenated solvents (methylene chloride, chloroform), ethyl acetate, tetrahydrofuran, 2-methyltetrahydrofuran, isooctane, cyclohexane, hexane(s), methylcyclohexane or methyl tert-butyl ether, or aromatic solvents such as benzene or toluene, or any other suitable solvent.

21: 2021/09855. 22: 2021/12/01. 43: 2023/08/11
51: B60T
71: CATERPILLAR INC.
72: MCKNIGHT, JAMES, WILLIAMSON, JAMES L
33: US 31: 16/433,973 32: 2019-06-06
54: AUTOMATIC BRAKE APPLICATION FOR EMERGENCY STOP
00: -
An electronic control unit (ECU) is disclosed. The ECU may detect an emergency stopping event associated with a vehicle. The ECU may determine, based on detecting the emergency stopping event, that electro-hydraulic brakes of the vehicle are in a disabled mode. The ECU may determine, based on determining that the electro-hydraulic brakes are in the disabled mode, a position of a brake pedal of the vehicle. The ECU may override, based on the position of the brake pedal, the disabled mode to engage the electro-hydraulic brakes during the emergency stopping event.

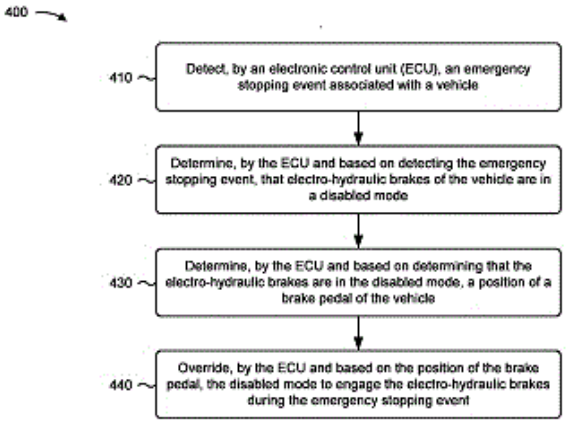

21: 2021/09899. 22: 2021/12/02. 43: 2023/08/11
51: A61K; A61P; A61M
71: KORTUC INC., TAISEI KAKO CO., LTD.
72: YAMASHITA, SHOGO, HORITA, TAIJI, SONOYAMA, TOMOYUKI
33: JP 31: 2019-102703 32: 2019-05-31
54: RADIATION OR ANTICANCER CHEMOTHERAPY SENSITIZER ADMINISTRATION HOLDER
00: -
Mixing a low-viscosity solution and a high-viscosity solution was difficult. An object of the present invention is to provide a holder for mixed administration of at least two types of solutions for enhancing the radiation or anticancer therapeutic effect on a tumor, wherein the holder is capable of simultaneously discharging each solution at a constant ratio from respective syringes containing each solution.

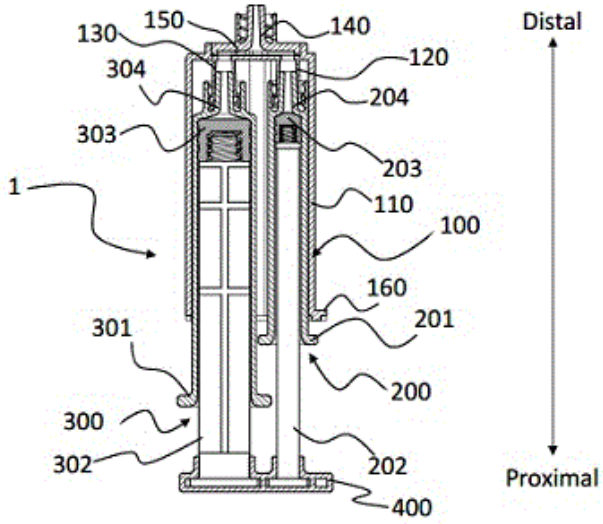

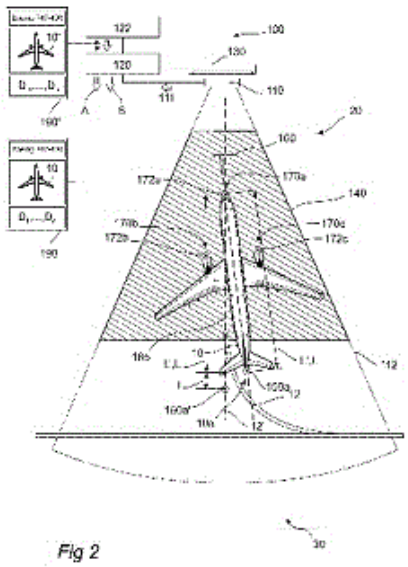

Fig 2

21: 2021/09900. 22: 2021/12/02. 43: 2023/08/10
51: G08G
71: ADB SAFEGATE SWEDEN AB
72: HÅKANSSON, PETER
33: EP 31: 19183349.0 32: 2019-06-28
54: AN AIRPORT STAND ARRANGEMENT AND METHOD
00: -
The disclosure relates to an airport stand arrangement (100) comprising: a remote sensing system (110) configured to detect an aircraft (10) within a sensing area (112), wherein said sensing area (112) includes a stand area (140), and a controller (120) configured to: determining, based on sensor data received from said remote sensing system (110), one or more estimated exterior surface positions (150a') on the aircraft (10), wherein each estimated exterior surface position is an estimated position of an associated real exterior surface position (150a) on the aircraft (10), wherein said real exterior surface position (150a) defines a limit of an extension of said aircraft in the sensing area (112),compare said one or more estimated exterior surface positions (150a') with one or more coordinates of the stand area (140) to determine if at least one from said one or more estimated exterior surface positions (150a') is outside of said stand area (140), and in response to at least one from said one or more estimated exterior surface positions (150a') being determined to be outside of said stand area (140): output an aircraft parking alert signal (A).

21: 2021/09970. 22: 2021/12/03. 43: 2023/08/10
51: C09D; C08L; C08F
71: COATEX
72: CORFIAS ZUCCALLI, CATHERINE, PARRENIN, LAURIE, SUAU, JEAN-MARC
33: FR 31: FR1908124 32: 2019-07-18
54: AQUEOUS COATING COMPOSITION
00: -
The invention concerns a composition for preparing a coating, such as a paint or a varnish, comprising an acrylic acid copolymer thickener, a polymer binder chosen from a vinyl acetate homopolymer, a vinyl acetate copolymer, a vinyl versatate homopolymer, a vinyl versatate copolymer and combinations thereof, and water. The invention also concerns the use of the acrylic acid copolymer in an aqueous coating composition comprising such a polymer binder in order to improve the stability of same during storage.

21: 2021/09974. 22: 2021/12/03. 43: 2023/08/10
51: G01C
71: SAFRAN ELECTRONICS & DEFENSE
72: LIGNON, CHRISTIAN
33: FR 31: FR1905987 32: 2019-06-06
54: METHOD AND DEVICE FOR RESETTING AN INERTIAL UNIT OF A TRANSPORT MEANS ON THE BASIS OF INFORMATION DELIVERED BY A VIEWFINDER OF THE TRANSPORT MEANS
00: -
The invention relates to a method and to a device for resetting an inertial unit of a transport means on the basis of information delivered by a viewfinder of the

transport means. According to the invention, a horizontal velocity vector of the transport means (MT) and coordinates of the transport means are obtained from the inertial unit (110), a horizontal line of sight of the viewfinder (120) is obtained on at least one landmark, coordinates of at least one landmark are obtained (130), an angle between the horizontal velocity vector and the horizontal line of sight is computed, the computed angle is drifted, an error is computed on the basis of the obtained coordinates, the angle and its computed drift, the computed error is transferred to a Kalman filter for filtering the error and resetting the inertial unit (110).

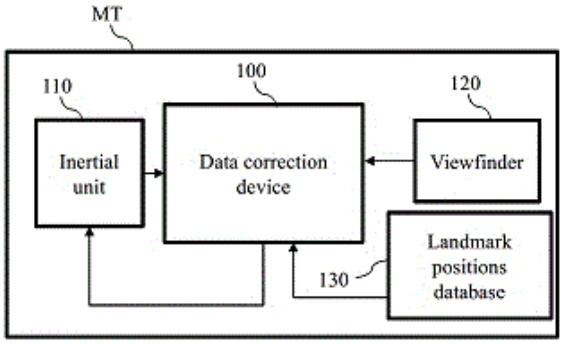

21: 2021/10226. 22: 2021/12/09. 43: 2023/08/11
51: D21H; B41M
71: ACTEGA SCHMID RHYNER AG
72: LUDWIG, PETER ELADIO, RÜEDI, ROLAND, WYLER, DIETER, SCHLATTERBECK, DIRK
33: DE 31: 10 2019 114 277.6 32: 2019-05-28
54: METHOD FOR VARNISHING SUBSTRATES, AND VARNISHED SUBSTRATES
00: -
The invention relates to a method for producing a printed product, wherein a preparation for producing a first layer as a sealing layer is applied to the substrate, and the preparation comprises at least one monomer, oligomer or prepolymer with at least one cross linkable, functional group. Subsequently, the first layer is cured, and a second layer is applied at least in regions to the first layer, wherein the second layer has a closed surface in the printed regions. Furthermore, the invention relates to a printed product comprising a substrate, a first layer and a second layer, wherein the first layer and the second layer comprise an organic, crosslinked varnish and have a closed surface, and wherein the first layer is transparent and has a layer thickness in the range from 1 to 10 µm. The second layer is applied at least in regions to the first layer (9) such that the first layer is arranged between the substrate and the second layer.



21: 2021/10258. 22: 2021/12/10. 43: 2023/08/11
51: A61K
71: VITALANT
72: DUMONT, LARRY J
33: US 31: 62/678,765 32: 2018-05-31
54: METHODS AND SYSTEMS FOR CRYOPRESERVATION AND RESUSPENSION OF BODY FLUIDS
00: -
The disclosure provides for a container system and method for resuspending a cryopreserved body fluid. The container system may include a cryopreservation container comprising the body fluid in a cryopreservation liquid, and a sterile filter sterilely and fluidly connected to the cryopreservation container.

21: 2021/10261. 22: 2021/12/10. 43: 2023/09/15
51: A01C; A01G
71: MA INDUSTRIES, LLC
72: SAUDER, Greggory, SAUDER, Timothy, KOCH, Justin, MOORE, Nowell, ABERLE, Reid, HESTERBERG, Connor, WELTE, Jonathan, WAREMBURG, Kyle, NUEST, Steven, NAFZIGER, Tyler
33: US 31: 62/862,953 32: 2019-06-18
33: US 31: 62/883,579 32: 2019-08-06
54: CROP INPUT APPLICATION SYSTEMS, METHODS, AND APPARATUS
00: -
Crop input application systems, methods and apparatus are provided. In some embodiments, an irrigation system is provided with a reel in fluid communication with a liquid source. In some embodiments, a drop assembly is incorporated in an irrigation system. In some embodiments, a crop applicator system includes a reel positioned between adjacent rows of crop.

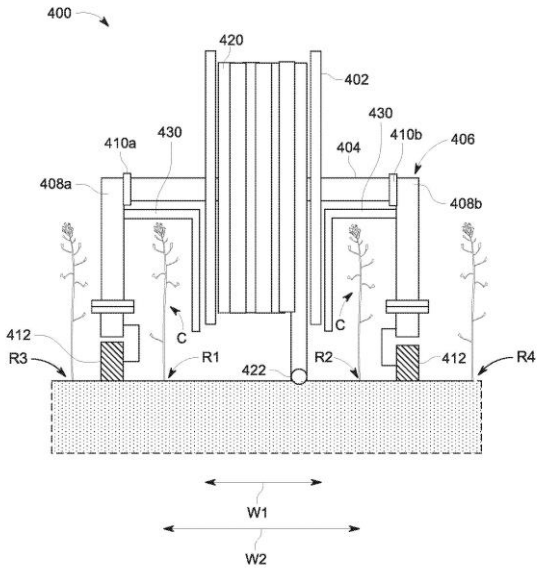

21: 2021/10284. 22: 2021/12/10. 43: 2023/08/11
51: G06F
71: SAMSUNG ELECTRONICS CO., LTD.
72: JUNG, WONSUK, LEE, JUNWOO, JANG, JINTAE
33: KR 31: 10-2019-0069161 32: 2019-06-12
54: ELECTRONIC DEVICE AND METHOD OF UTILIZING STORAGE SPACE THEREOF
00: -
The various embodiments disclose an electronic device including: a storage including a non-volatile memory having a buffer space and a storage space, a storage device controller, and a storage interface, and a processor. According to various embodiments, the processor may be configured to perform control to determine whether the storage supports a high speed data storage mode using a buffer space of a non-volatile memory of the storage, activate a function of writing data buffered in the buffer space of the non-volatile memory into a storage space of the non-volatile memory based on the storage interface operating in a first state based on the storage supporting the high speed data storage mode, and transition the storage interface of the storage to the first state based on no request to the storage being generated during a predetermined time period based on the storage interface operating in a second state.

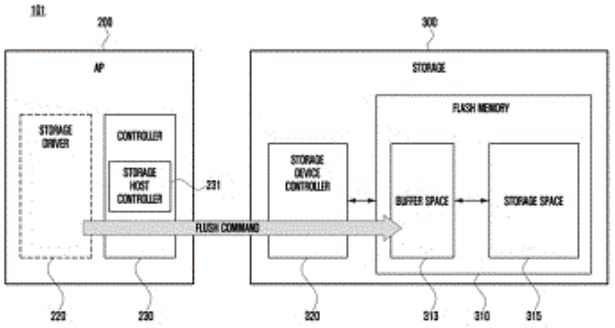

21: 2021/10285. 22: 2021/12/10. 43: 2023/08/10
51: C07K; A61P
71: OXFORD BIOTHERAPEUTICS LTD
72: BISHT, ARNIMA, ACKROYD, JAMES
33: US 31: 62/870,269 32: 2019-07-03
33: US 31: 62/965,450 32: 2020-01-24
54: ANTIBODIES AND METHODS OF USE
00: -
The present invention relates to antibodies and other therapeutic proteins directed against SLAM family member 6 (SLAMF6) also known as NTB-A or CD352, nucleic acids encoding such antibodies and therapeutic proteins, methods for preparing antibodies and other therapeutic proteins, and methods for the treatment of diseases, such as cancers, by using antibodies and other therapeutic proteins directed against SLAMF6.

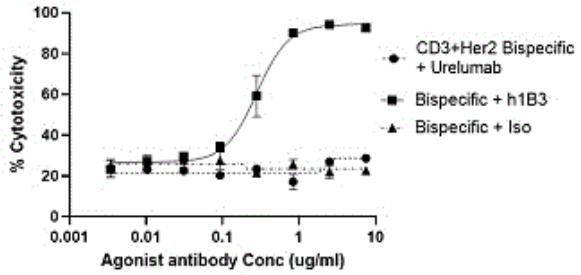

21: 2021/10288. 22: 2021/12/10. 43: 2023/08/10
51: A61K; A61P; A61F
71: THE POPULATION COUNCIL, INC.
72: VARIANO, BRUCE
33: US 31: 16/448,399 32: 2019-06-21
54: SYSTEM FOR PROVIDING BIRTH CONTROL
00: -
The present disclosure relates to a vaginal system that prevents pregnancy comprised of segesterone acetate and ethinyl estradiol and is configured for thirteen 28-day product-use cycles.

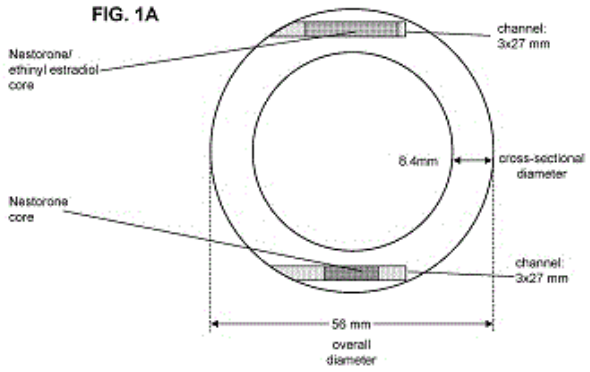

21: 2021/10356. 22: 2021/12/13. 43: 2023/08/10
51: C12N; A01N
71: MIGAL GALILEE RESEARCH INSTITUTE LTD.
72: AFRIAT-JURNOU, LIVNAT, EROV, MAAYAN, GUREVICH, DAVID, YELIN, MERY DAFNY
33: US 31: 62/862,348 32: 2019-06-17
54: STABILIZED MUTANTS OF QUORUM QUENCHING LACTONASE AND USE THEREOF IN TREATMENT OF PATHOGENS
00: -
Mutated phosphotriesterase-like lactonases or functional fragments thereof are provided as well as nucleic acid molecules and vectors encoding them. Furthermore, methods for treating or preventing infection of a bacterium in a host, such as a plant or a part, organ or a plant propagation material thereof comprising applying said mutated phosphotriesterase-like lactonases or the wild-type enzyme thereto are provided in addition to cells expressing the mutated phosphotriesterase-like lactonases and methods for producing them.

21: 2021/10421. 22: 2021/12/14. 43: 2023/08/11
51: B01D
71: CATERPILLAR INC.
72: IMMEL, JON T, MOREHOUSE III, DARRELL L, RIES, JEFFREY R, RODRIGUEZ, JAVIER A
33: US 31: 16/443,239 32: 2019-06-17
54: FILTER ELEMENT HAVING POTTED GASKET END CAP ASSEMBLY
00: -
The present disclosure relates to a filter element for use in a fluid filter system is disclosed herein. The filter element comprises a filter medium having a longitudinal axis between a first end and a second end, and an end cap assembly attached to the first end of the filter medium. The end cap assembly includes a first end cap aligned with the longitudinal axis and proximate to the first end of the filter medium; a first member concentric with and disposed radially apart from the first end cap and the filter medium and axially between the first end cap and the second end of the filter medium; and a plurality of arms connecting the first end cap with the first member, each arm configured to align the filter element with respect to the container and base plate by absorbing alignment discrepancies between at least the base plate and container.

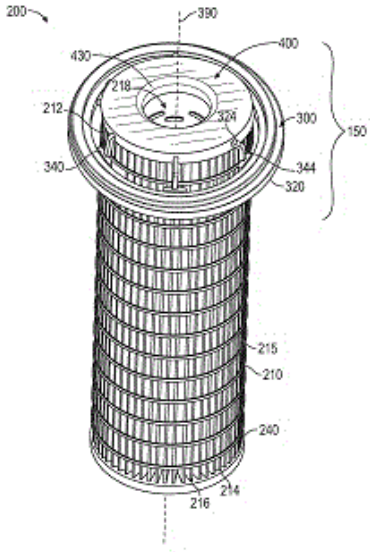

21: 2021/10435. 22: 2021/12/14. 43: 2023/08/11
51: B62D
71: MAN TRUCK & BUS SE
72: SCHMITZ, ANDREAS
33: DE 31: 10 2019 004 968.3 32: 2019-07-16
54: DEVICE FOR PIVOTABLY CONNECTING AN AIR-GUIDING ELEMENT TO A VEHICLE
00: -
The invention relates, amongst other things, to a device for pivotably connecting an air-guiding element (16), preferably a rear side-air-guiding element of a driver's cab, to a vehicle (10), preferably a rear wall of the driver's cab of a utility vehicle. The device has a swing hinge (22), which is designed to be fastened on the one hand to the air-guiding element (16) and on the other hand to the vehicle (10). The swing hinge (22) has a locking mechanism (32), which is designed to lock the swing hinge (22) automatically when at least one predetermined pivot position has been reached.

FIG. 1

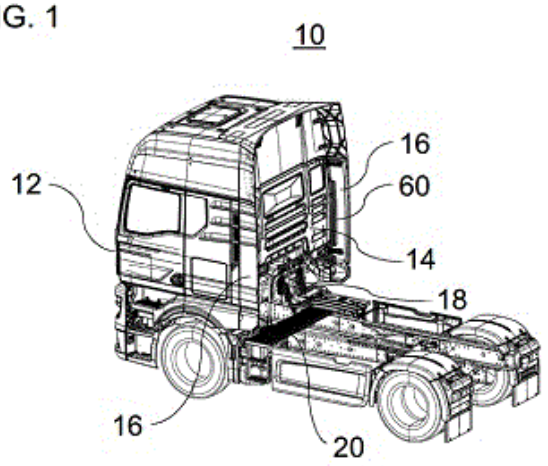

21: 2021/10437. 22: 2021/12/14. 43: 2023/08/11
51: A61K
71: SOLIGENIX, INC., UNIVERSITY OF HAWAII
72: DONINI, OREOLA, LEHRER, AXEL
33: US 31: 62/850,443 32: 2019-05-20
54: COMPOSITIONS AND METHODS OF MANUFACTURING TRIVALENT FILOVIRUS VACCINES
00: -
Disclosed is a stable immunogenic composition capable of eliciting a robust and durable immune response, comprising at least one antigen consisting of a filovirus glycoprotein and at least one nano-emulsion adjuvant which are co-lyophilized and can be reconstituted immediately prior to use. Also disclosed is a vaccine composition comprising at least two antigens, wherein each antigen is specific to a different genus of filovirus and which also comprises at least one nano-emulsion adjuvant.

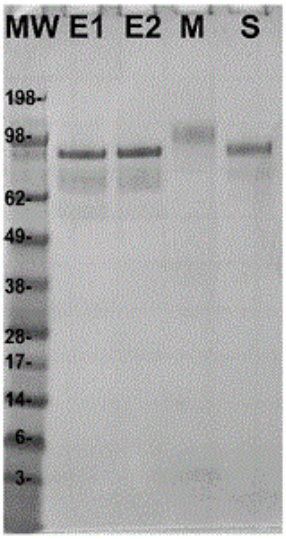

21: 2021/10498. 22: 2021/12/15. 43: 2023/08/11
51: H04W
71: SAMSUNG ELECTRONICS CO., LTD.
72: KIM, HEETAE, JEONG, KYEJEONG, KIM, JUNGTAE, BANG, SUNGYONG, HWANG, INHWAN
33: KR 31: 10-2019-0095655 32: 2019-08-06
54: ELECTRONIC DEVICE FOR REDUCING POWER CONSUMPTION AND OPERATING METHOD THEREOF
00: -
A device and a method for reducing power consumption of an electronic device is provided. The electronic device includes a display device, a battery, and at least one processor configured to be operatively connected to the display device, wherein the processor may determine whether to perform a handover to a second communication network, based on whether the display device is activated and a data throughput, in a state of connection to a first communication network among a plurality of communication networks supportable by the electronic device, and perform a handover to the second communication network when it is determined to perform the handover to the second communication network.

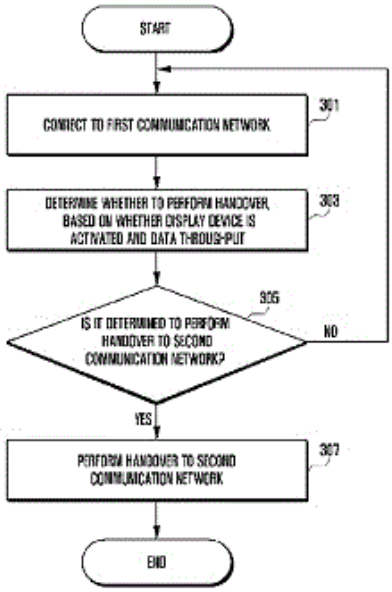

21: 2021/10554. 22: 2021/12/17. 43: 2023/08/11
51: A61K; C07K; A61P; A01K
71: GENENTECH, INC.
72: GROGAN, JANE, JOHNSTON, ROBERT J, IRVING, BRYAN, HACKNEY, JASON, YU, XIN, EATON, DAN, BOWLES, KRISTIN, COMPS-AGRAR, LAETITIA
33: US 31: 61/846,941 32: 2013-07-16
33: US 31: 61/950,754 32: 2014-03-10
33: US 31: 61/992,109 32: 2014-05-12
33: US 31: 61/865,582 32: 2013-08-13
33: US 31: 61/985,884 32: 2014-04-29
54: METHODS OF TREATING CANCER USING PD-1 AXIS BINDING ANTAGONISTS AND TIGIT INHIBITORS
00: -
The present disclosure describes combination treatment comprising a PD-1 axis binding antagonist and an agent that decreases or inhibits TIGIT expression and/or activity and methods for use thereof, including methods of treating conditions where enhanced immunogenicity is desired such as increasing tumor immunogenicity for the treatment of cancer or chronic infection.

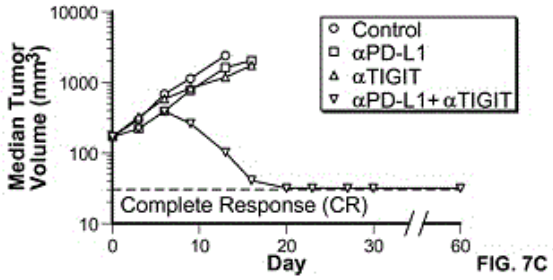

FIG. 7C

21: 2021/10580. 22: 2021/12/17. 43: 2023/08/11
51: B05B; B25J; G05B
71: DÜRR SYSTEMS AG
72: NOLTE, HANS-JÜRGEN, HERRE, FRANK, HECKELER, CHRISTOPH
33: DE 31: 10 2019 113 341.6 32: 2019-05-20
54: COATING THICKNESS OPTIMIZATION AND PROGRAMMING METHOD FOR A COATING SYSTEM AND CORRESPONDING COATING SYSTEM
00: -
The invention relates to a method for programming a software-controlled coating robot (2) for coating components, which method comprises the following steps: - specifying a robot path, which is intended to be travelled from a paint impact point of an applicator (1) guided by the coating robot (2) in coating operations; - specifying application parameters which are intended to be complied with by the applicator (1) and the coating robot (2) in production coating operations when moving along the robot path; and - virtually determining a painting outcome for the specified robot path and the specified application parameters. The invention provides the following steps for virtually determining the painting outcome: - generating production spray pattern data and/or reading production spray pattern data from a database (4) in dependence upon the specified robot path and/or the specified application parameters, wherein the production spray pattern data read reproduces a spray pattern which the applicator (1) generates in production coating operations using the specified application parameters and/or on the specified robot path; and - determining the painting outcome taking into account the production spray pattern data read from the database (4) or the spray pattern data generated. The invention also comprises a corresponding coating system.

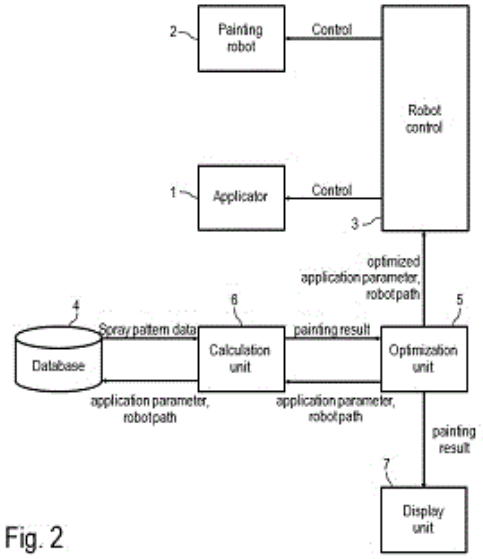

Fig. 2

21: 2021/10581. 22: 2021/12/17. 43: 2023/08/11
51: A63F; G09C
71: DIZER AB
72: DUNKERS, LINUS
33: SE 31: 1950604-7 32: 2019-05-21
54: THREE-DIMENSIONAL PUZZLE
00: -
A three-dimensional puzzle (110) comprising a plurality of cuboid puzzle blocks together forming a predetermined three-dimensional puzzle shape, wherein each puzzle block (102) comprises either a male (106a-c) or a female (108a-c) connecting element on each of at least three sides of the puzzle block; wherein the connecting elements for the respective puzzle block are configured such that each puzzle block is unique.

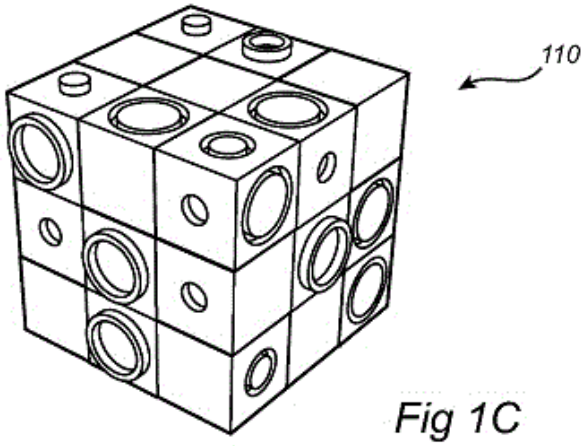

Fig 1C

21: 2021/10584. 22: 2021/12/17. 43: 2023/08/11
51: G01G
71: RINSTRUM PTY., LTD.
72: PEARSON, DARREN
33: US 31: 62/857,943 32: 2019-06-06
54: WEIGH-IN-MOTION SYSTEM WITH CHANNEL DATA
00: -
A weigh-in-motion system includes a base, a load cell assembly supporting a leading edge of a platform structure movable with respect to the base, and a load cell assembly supporting a trailing edge of the platform. A processor is configured to execute program instructions in a memory to obtain load profile data generated by the load cells and to determine a weight associated with a vehicle using the load profile data. The processor is further configured to execute the program instructions to generate an output based upon the determined weight.

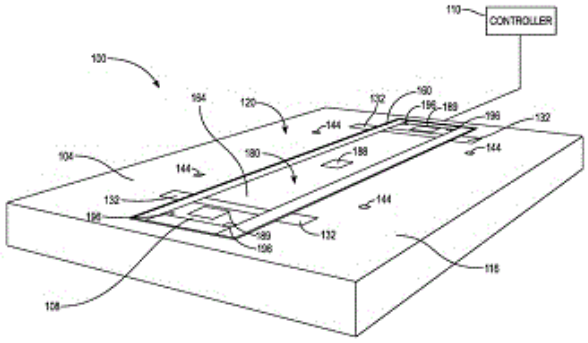

21: 2021/10586. 22: 2021/12/17. 43: 2023/08/11
51: B22D
71: VESUVIUS GROUP, S.A.
72: COLLURA, MARIANO, SIBIET, FABRICE, QUINN, JASON, BUTTS, JEFFREY, ADAMS, STEPHEN J
33: EP 31: 19181862.4 32: 2019-06-21
54: SLIDE CLOSURE FOR VESSEL CONTAINING MOLTEN METAL
00: -
Slide closure for a vessel that operatively contains molten metal, comprising: a slide housing including a recess receiving a first refractory closure plate; a slide unit including an opening receiving a second refractory closure plate; wherein at least one clamping mechanism is arranged to start the clamping of the corresponding refractory closure plate via an actuation of the at least one clamping

mechanism when the slide unit is displaced relative to the slide housing and the first and the second refractory closure plates are distant apart from each other, essentially before the first and the second faces of the respective first and the second refractory closure plates are in contact under pressure.

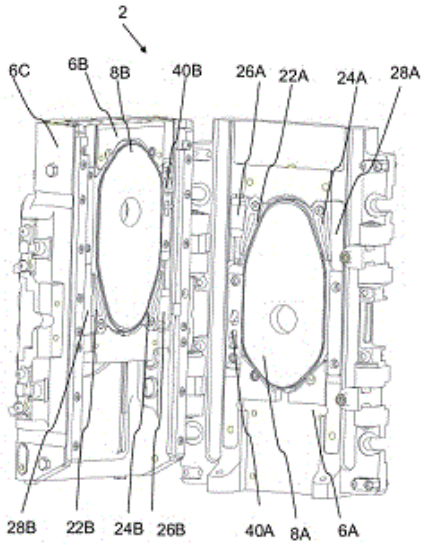

21: 2021/10681. 22: 2021/12/20. 43: 2023/08/11
51: A61B; G01N; B01L
71: CUTISS AG
72: WELTI, ASTRID, HOLENSTEIN, CLAUDE, RONFARD, VINCENT, DITTRICH, ANNA-LENA, FREI, RETO, WULLSCHLEGER, CHRISTIAN, WOLLMANN, SEBASTIAN
33: US 31: 62/856,853 32: 2019-06-04
54: BIOPSY CARRIER
00: -
The present invention relates to a device adapted to facilitate transport of a biopsy sample from a sterile extraction site to laboratory-type equipment by which the biopsy sample is processed, while maintaining the biopsy sample wetted and sterile and automatically transferring the biopsy sample from the device to the laboratory- type equipment.

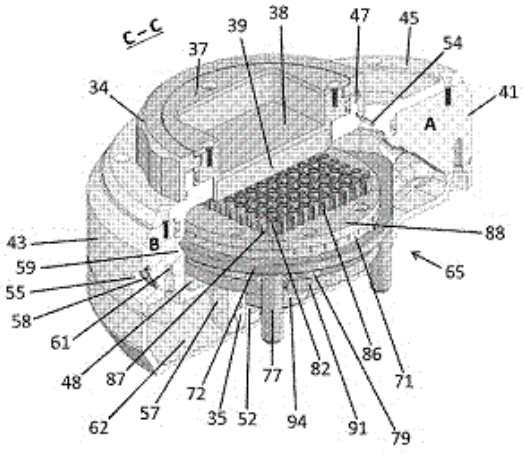

21: 2021/10682. 22: 2021/12/20. 43: 2023/08/04
51: C04B
71: ORBIX PRODUCTIONS
72: VAN MECHELEN, DIRK, VAN MIERLOO, PETER, MAYELLE, NICK
33: EP 31: 19182726.0 32: 2019-06-26
54: METHOD FOR PRODUCING A CARBONATE BONDED, COMPACTED ARTICLE
00: -
The method for producing a carbonate bonded, compacted article, which method comprises the steps of providing a particulate, carbonatable material; compacting the particulate material to form a compact; and carbonating said compact. The carbonation of the compact is started and subsequently continued for at least 1 hour with a low partial carbon dioxide pressure in the carbonation gas which is lower than 0.5 bars, after which carbonation of the compact is continued for at least 8 hours with a high partial carbon dioxide pressure in the carbonation gas which is higher than 0.5 bars. By carbonating in two phases with a low and a high partial carbon dioxide pressure, a higher compressive strength of the carbonated compacts can be achieved within a predetermined carbonation time, in particular within a carbonation time of about 24 hours so that every day new compacts can be carbonated.

21: 2021/10683. 22: 2021/12/20. 43: 2023/08/04
51: A61K; A61Q
71: UNILEVER GLOBAL IP LIMITED
72: ROCHA, SHEILA ALVES, CHIANG, CHUNG-YI, ROSA, JOSE GUILLERMO, NIP, JOHN CHUN-SING

33: EP 31: 19186086.5 32: 2019-07-12
54: TOPICAL COMPOSITIONS AND METHODS OF USING SAME AGAINST MITOCHONDRIAL FRAGMENTATION
00: -
Topical personal care compositions for improving cellular energy efficiency by protecting skin from mitochondrial fragmentation that takes place in an aging individual in need thereof. Use of a topical personal care composition comprising niacinamide and S-adenosyl-L-methionine. Use of niacinamide and S-adenosyl-L-methionine in the manufacture of a topical personal care composition for decreasing or preventing mitochondrial fragmentation in skin cells and for increasing skin cellular energy.

21: 2021/10692. 22: 2021/12/20. 43: 2023/08/07
51: A61K; C07D
71: Merck Sharp & Dohme LLC
72: CROWLEY, Brendan M., NANTERMET, Philippe, OLSEN, David, SUZUKI, Takao
33: PCT/CN 31: 2019/094601 32: 2019-07-03
54: COMPOUNDS AND METHODS OF USE THEREOF AS ANTIBACTERIAL AGENTS
00: -
Disclosed are dihydroisoxazole compounds of Formula (I) and pharmaceutically acceptable salts thereof, wherein A, E, and R 1 are as defined herein. Also disclosed are compositions which comprise at least one of these dihydroisoxazole compounds, methods for inhibiting growth of mycobacterial cells as well as a method of treating mycobacterial infections by Mycobacterium tuberculosis comprising administering a therapeutically effective amount of these dihydroisoxazole compounds and/or a pharmaceutically acceptable salt thereof, or a composition comprising such compound and/or salt.

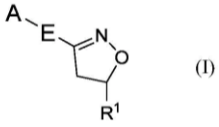

(I)

21: 2021/10741. 22: 2021/12/21. 43: 2023/08/11
51: G06F
71: AB INITIO TECHNOLOGY LLC
72: JOYCE, JOHN, ISMAN, MARSHALL A, KENDALL, SAM
33: US 31: 62/851,295 32: 2019-05-22
33: US 31: 16/746,392 32: 2020-01-17
54: STATIC AND RUNTIME ANALYSIS OF COMPUTER PROGRAM SYSTEMS
00: -
A method for analyzing a computer program ecosystem including multiple computer programs includes performing a static analysis of the ecosystem, including identifying static dependencies among ecosystem elements based on values of parameters in parameter sets associated with the ecosystem, the elements including the computer programs and data resources associated with the computer programs. The method includes performing a runtime analysis of the ecosystem, including identifying elements that were utilized during execution of the ecosystem to process data records. The method includes performing a schedule analysis of the ecosystem, including identifying a computer program that has a schedule dependency from another computer program. The method includes identifying a subset of the elements as an ecosystem unit based on the results of the static, runtime, and schedule analyses; and migrating the ecosystem unit from a first to a second computer system, testing the ecosystem unit, or both.

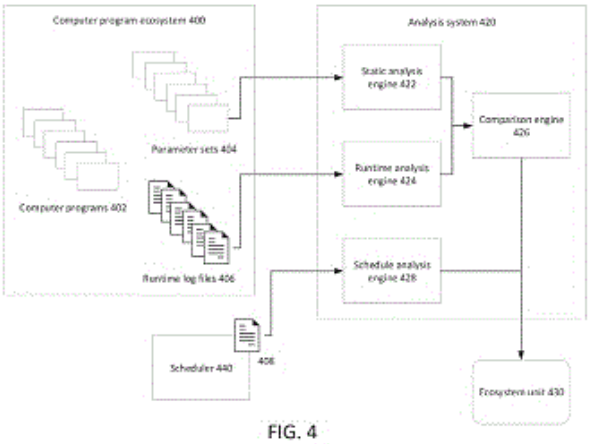

FIG. 4

21: 2021/10743. 22: 2021/12/21. 43: 2023/08/11
51: H04B; A01G
71: NETAFIM LTD
72: SCHWEITZER, ABRAHAM
33: US 31: 62/869,583 32: 2019-07-02
54: INFRASTRUCTURAL LINES AND CONTROL AND/OR COMMUNICATION NETWORKS ASSOCIATED THEREWITH
00: -
A system includes a longitudinally extending infrastructure, for example a piping infrastructure,

and a plurality of nodes located along the infrastructure. The system further includes communication channels that extend along the infrastructure that communicate with the nodes for permitting multi-hop routing of messages between nodes along the infrastructure.

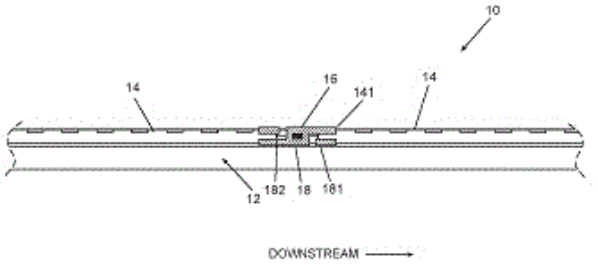

21: 2021/10791. 22: 2021/12/22. 43: 2023/09/18
51: B65D
71: APL CARTONS (PTY) LTD, GRAND PLASTICS (PTY) LTD
72: LE GRANGE, Martin Francisco
54: CONTAINER WITH HINGED LID
00: -
A container (10) comprises a punnet (14) of cellulosic material and a lid (12) of synthetic polymeric material that is at least partly transparent. The lid (12) is attached to the punnet (14) with a hinge mechanism (56) that allows it to hinge open and closed and the container (10) has a lock mechanism (34,54) for holding the lid (12) closed. A rear wall (38) of the punnet (14) is higher than a front wall (40) and a front wall (20) of the lid (12) is higher than a rear wall (18), to provide good visibility of the contents of the container (10).

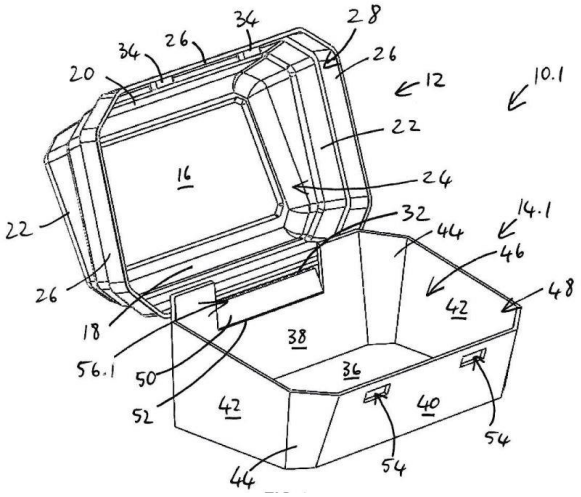

21: 2021/10797. 22: 2021/12/22. 43: 2023/08/11
51: A61F, A61B
71: STEGMANN, JOHANN PETRUS
72: STEGMANN, JOHANN PETRUS
33: NL 31: 2023241 32: 2019-05-31
54: INTERVERTEBRAL FUSION CAGE
00: -
This invention relates to an intervertebral fusion cage for insertion between vertebrae. The cage has a body defining a first, anterior portion, a second, posterior portion and a central portion extending between the anterior and posterior portions. The central portion may define a first surface which is, in use, a top surface and a second surface which is, in use, a bottom surface. The top and bottom surfaces may carry gripping formation for gripping end plates of the vertebrae. The gripping formations on the top and bottom surfaces preferably face substantially opposite directions such that the gripping formations on the top surface obstruct movement in a first direction while the gripping formations on the bottom surface obstruct movement in a second direction, which is substantially opposite the first direction.

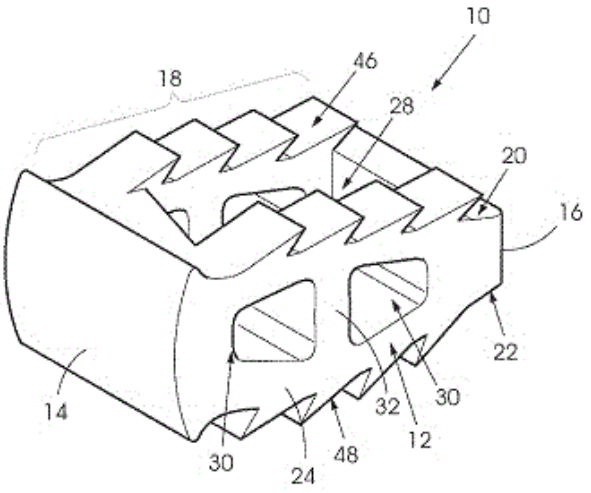

21: 2021/10800. 22: 2021/12/22. 43: 2023/08/10
51: C11D
71: UNILEVER GLOBAL IP LIMITED
72: BATCHELOR, STEPHEN NORMAN, BENNETT, JULIE, BEST, JONATHAN, THORLEY, DAVID CHRISTOPHER
33: EP 31: 19183232.8 32: 2019-06-28
54: DETERGENT COMPOSITION
00: -
The invention concerns a surfactant composition comprising: (a) from 10 to 90 wt.% of an alcohol ethoxylate of formula R1-$(OCH_2CH_2)_mOH$ where $R_1$is oleyl and/or elaidic and where m is from 6 to 16; and, (b) from 10 to 90 wt.% of an alcohol ether sulfate of formula R_2- $(OCH_2CH_2)_nOSO_3H$ where $R_2$is saturated or monounsaturated linear C16 and C18 alkyl chain and n is from 5 to 20; wherein the total level of (a) + (b) is greater than 80 wt.%; a detergent composition comprising said surfactant composition; and a domestic method of treating a textile, the method comprising the step of: treating a textile with an aqueous solution of 0.5 to 20 g/L of said detergent composition.

21: 2021/10893. 22: 2021/12/23. 43: 2023/08/11
51: B60K
71: IJTT CO., LTD.
72: HAMANAKA, YOSHIHISA, KIMURA, ATSUSHI, KOBAYASHI, MASAYUKI
33: JP 31: 2019-102414 32: 2019-05-31
54: CONTROL SYSTEM FOR VEHICLE
00: -
Provided is a vehicle control system capable of suppressing a shock torque generated in a drive system component of a font wheel. This control system (100) for a vehicle (1) is provided with: a transfer (10) having a multiplate clutch (11); and a control device (50) that controls fastening force of the multiplate clutch (11) according to a speed difference between the front and rear wheels (2, 3), wherein the control device (50) controls, during vehicle traveling, the multiplate clutch (11) so that an increase in the fastening force of the multiplate clutch (11) is suppressed when the angular acceleration (α) of the front wheel (2) has reached a predetermined threshold (αT) or less.

FIG.3

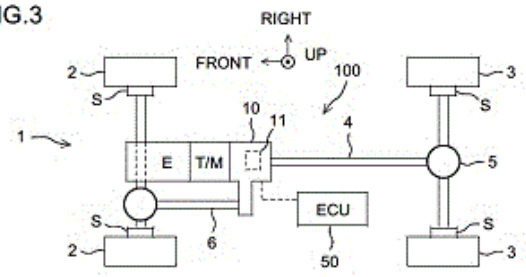

21: 2021/10898. 22: 2021/12/23. 43: 2023/08/11
51: A01N; A01P; C05G; C12N; C12R; C05F
71: SYMBORG, SL
72: JUÁREZ MOLINA, JESÚS, FERNÁNDEZ MARTÍN, FELIX, BERNABÉ GARCÍA, ANTONIO JOSÉ, VILA MARTÍNEZ, ANA, CARMONA ÁLVAREZ, FRANCISCO JOSÉ, TORRES VERA, ROCÍO
33: EP 31: 19382457.0 32: 2019-06-03
54: METHYLOBACTERIUM SP. VOV. STRAIN, COMPOSITIONS COMPRISING IT, AND ITS USE AS BIO-STIMULANT AND ENDOPHYTE NITROGEN-FIXING BACTERIUM
00: -
The present invention relates to the agronomic field. Specifically, it relates to a*Methylobacterium*sp. nov. strain deposited under accession number CECT 9580, to compositions comprising it, and to its use as bio-stimulant and endophyte nitrogen-fixing bacterium in plants.

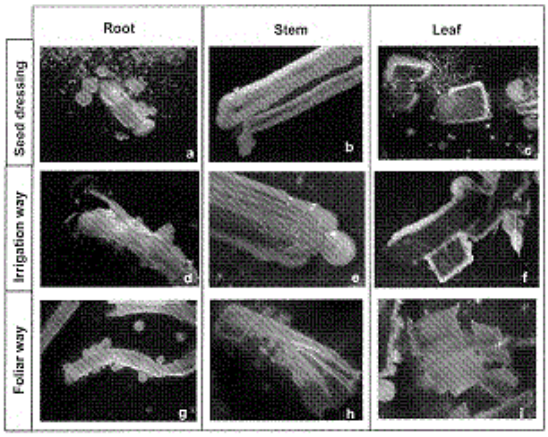

21: 2022/01017. 22: 2022/01/21. 43: 2023/09/27
51: G01R; H02J
71: DD DANNAR LLC
72: DANNAR, Gary, Don, HUNG, Stephen, T.
33: US 31: 62/865,672 32: 2019-06-24
54: BATTERY COMMUNICATION AND CONTROL SYSTEMS AND METHODS
00: -
Systems and methods for use with a battery having an electronic system connected to a battery network configured to generate a state variable associated with the receiving, storing and/or outputting of electricity by the battery. The system includes a router connected to the battery network and the electronic system for monitoring the at least one detectable state variable, and based on such monitoring, selectively modifying the receiving, storing and/or outputting of electricity by the battery. The system also may include a second network and a controller connected to the second network and to the router via the battery network and configured to monitor the router, and based on the monitoring of the at least one router, selectively modify the router and the receiving, storing and/or outputting of electricity by the battery.

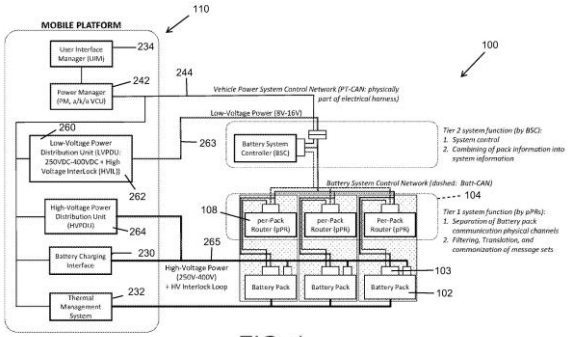

FIG. 1

21: 2022/01070. 22: 2022/01/24. 43: 2023/10/11
51: A61K; A61P
71: NYMOX CORPORATION
72: AVERBACK, Paul
33: US 31: 16/528,326 32: 2019-07-31
54: FOCAL TREATMENT OF PROSTATE CANCER
00: -
The embodiments include methods of treating prostate cancer by administering to a low grade unifocal prostate cancer tumor a composition comprising a therapeutically effective amount of pharmaceutically active ingredient capable of inducing necrosis of a low grade unifocal prostate cancer tumor, wherein administration reduces cancer incidence, cancer grade, and cancer progression (worsening) in the entire hemi-prostate where the initial focus was located and treated.

21: 2022/01318. 22: 2022/01/27. 43: 2023/09/14
51: G06F; H04L
71: IMAGINEBC
72: RIND, Erik, H., DORDEVIC, Nenad, TENLY, Charles, ROSEN, Michael, RIND, Greg
33: US 31: 16/520,534 32: 2019-07-24
54: STAGED INFORMATION EXCHANGE FACILITATED BY CONTENT-ADDRESSABLE RECORDS INDEXED TO PSEUDONYMOUS IDENTIFIERS BY A TAMPER-EVIDENT DATA STRUCTURE
00: -
Provided is a closed-loop, referral-based, information-exchange in which end-users control, and in some cases can be rewarded for divulging, their personal information. In some embodiments, the computing environment (10) may include a server system (12) user computing devices (14), data consumer computing devices (16), a higher-

trust set of data repositories (18) including a tamper-evident decentralized data repository (20) and a content-addressable decentralized file system (22), a content repository (24), and the Internet (26).

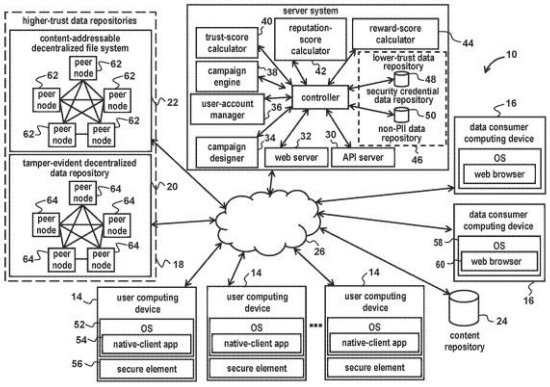

21: 2022/01445. 22: 2022/02/01. 43: 2023/09/14
51: A61K; A61P
71: LOCUS IP COMPANY, LLC
72: FARMER, Sean, ALIBEK, Ken
33: US 31: 62/885,231 32: 2019-08-10
54: OLFACTORY DELIVERY OF THERAPEUTIC COMPOUNDS TO THE CENTRAL NERVOUS SYSTEM
00: -
The present invention provides materials and methods for treating symptoms of neurological conditions. More specifically, the subject invention provides compositions and methods of their use for treating one or more symptoms and/or comorbidities of a neurological condition such as an infection, a neurodevelopmental disease, and/or a neurodegenerative disease. In preferred embodiments, the composition is administered to the subject via nasal administration.

21: 2022/01468. 22: 2022/02/01. 43: 2023/08/01
51: G01N; C07K
71: WORG PHARMACEUTICALS (ZHEJIANG) CO., LTD.
72: JANSSON, LISELOTTE, SCHURGERS, EVELIEN, WRAITH, DAVID
33: GB 31: 1909774.0 32: 2019-07-08
54: METHOD
00: -
The invention relates to methods for identifying tolerogenic peptides. The invention also relates to products used in and produced by such methods. The invention also relates to the use of such tolerogenic peptides in the treatment of disease.

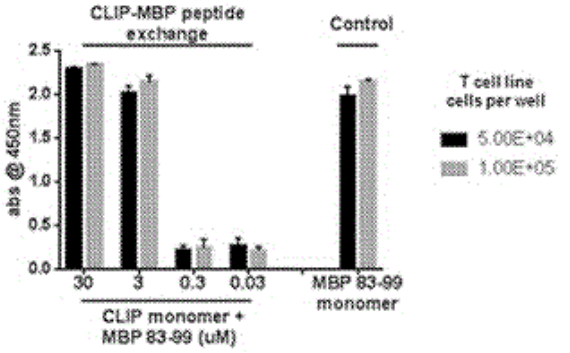

21: 2022/01526. 22: 2022/02/03. 43: 2023/09/29
51: A23L; A61K; A61P
71: LOCUS IP COMPANY, LLC
72: FARMER, Sean, ALIBEK, Ken
33: US 31: 62/886,460 32: 2019-08-14
54: DRINKABLE SUPPLEMENT COMPOSITION FOR IMPROVED HEALTH AND HYDRATION
00: -
The present invention provides compositions and methods for enhancing the health of a subject by, for example, restoring the subject's gut microbiome, increasing water and electrolyte absorption in the digestive tract, and/or providing a therapeutic substance to the subject. In certain specific embodiments, the present invention can be used for ameliorating the adverse physiological effects that can result from the presence of one or more detrimental microorganisms in a subject's gut. In certain specific embodiments, the present invention can also be used as an enhanced mode of hydration or re-hydration, particularly for subjects suffering from, for example, a condition that causes vomiting and/or diarrhea.

21: 2022/01616. 22: 2022/02/07. 43: 2023/08/28
51: B65D
71: Pailpac (Pty) Ltd
72: MURRAY, Brian
33: ZA 31: 2020/06923 32: 2020-11-06
54: A CONTAINER AND A METHOD OF MANUFACTURING A CONTAINER
00: -
This invention relates to a method of manufacturing a container, and a container. The method comprises providing top and bottom portions of the container;

bringing the top and bottom portions of the container together such that first and second attachment formations of the top and bottom portions are engageable with each other; and attaching the top portion and bottom portion together to form a seal at least adjacent the first and second attachment formations, wherein the seal is provided in a top third of a height of the container. The top and bottom formation are attached via ultrasonic welding or thermally. The top portion has a shell-like body with an opening and a peripheral edge provided with first attachment formations. The bottom portion has a shell-like body with a peripheral edge provided with second attachment formations which are suitable for engagement with the first attachment formations.

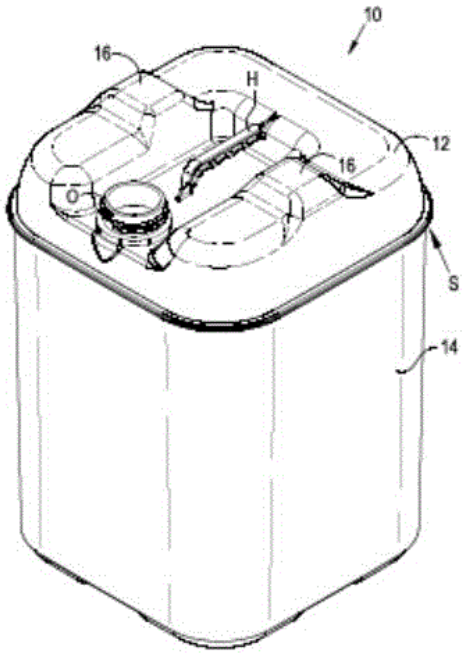

21: 2022/01828. 22: 2022/02/11. 43: 2023/09/14
51: A61K; A61P
71: NOVARTIS AG
72: IRIGARAY, Sebastien, KLEIN, Laurent, SKEGRO, Darko, VILLANI, Marco, WELZENBACH, Karl
33: EP 31: 19196045.9 32: 2019-09-06
54: THERAPEUTIC FUSION PROTEINS
00: -
The present invention relates to fusion proteins suitable for use as a medicament or research tool. Therapeutic uses of the fusion proteins may include the prevention or treatment of acute or chronic inflammatory and immune system-driven organ and micro-vascular disorders, for example, acute kidney injury, acute myocardial infarction, acute respiratory distress or chronic obstructive pulmonary disease fibrosis and other organ injuries resulting from tissue trauma and acute and chronic injury.

21: 2022/01988. 22: 2022/02/16. 43: 2023/08/07
51: A61K; A61P
71: ImmuneSensor Therapeutics, Inc., The Board of Regents of the University of Texas System
72: CHEN, Zhijian, SHI, Heping, WEI, Qi, CHEN, Chuo, SUN, Lijun, QIU, Jian, WU, Youtong
33: US 31: 62/876,590 32: 2019-07-19
54: ANTIBODY-STING AGONIST CONJUGATES AND THEIR USE IN IMMUNOTHERAPY
00: -
The present disclosure relates to, among other things, antibody-drug conjugates comprising a STING agonist cyclic di-nucleotide conjugated to an antibody, preparation methods therefor, and uses therefor.

21: 2022/02096. 22: 2022/02/18. 43: 2023/10/16
51: F16K
71: ADVANCED VALVES CC
72: WIEDERHOLD, Richard Jost
33: ZA 31: 2021/00614 32: 2021-01-28
54: VENTILATION DEVICE
00: -
A ventilation valve for a water heater which includes two valve members which are located in series in a passage, connected to the heater, and which open if the pressure in the heater drops below a predetermined level.

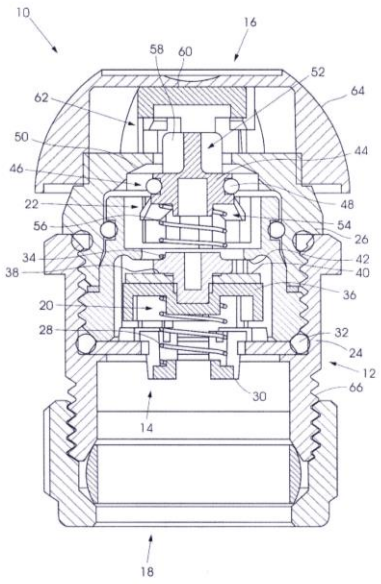

21: 2022/02324. 22: 2022/02/23. 43: 2023/08/01
51: E04G
71: BRANDSAFWAY SERVICES, LLC
72: GRUMBERG, MATHIEU
33: US 31: 62/882,384 32: 2019-08-02
54: MONORAIL SYSTEM AND RELATED SCAFFOLD STRUCTURES, SYSTEMS AND METHODS OF USE
00: -

A monorail assembly includes a first scaffold system comprising at least one framework member being an elongated structure having a bottom chord and a plurality of panel points along the bottom chord; at least one monorail beam; and at least one bracket structure configured to secure to the at least one framework member at or about at least two panel points and to the at least one monorail beam.

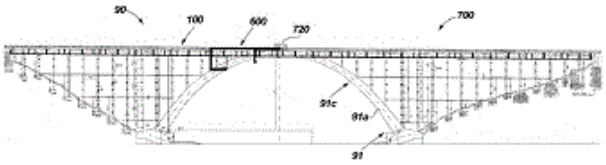

21: 2022/02507. 22: 2022/02/28. 43: 2023/09/18
51: C05C; C05G; C07D
71: THE UNIVERSITY OF MELBOURNE
72: TAGGERT, Bethany Isabel, WILLE, Uta, CHEN, Deli
33: AU 31: 2019903269 32: 2019-09-05
54: NITRIFICATION INHIBITORS
00: -

The present invention generally relates to nitrification inhibitors and compositions comprising nitrification inhibitors. The present invention also relates to use of the nitrification inhibitors and compositions for application to fertilisers, plants, agricultural areas (e.g. soils or pastures) to reduce or inhibit the oxidation of ammonium nitrogen to nitrite and nitrate nitrogen, such as the oxidation of ammonia- or urea-based fertilisers.

21: 2022/02600. 22: 2022/03/03. 43: 2023/08/14
51: A61K
71: Sanofi Pasteur Inc., SK Bioscience Co., Ltd.
72: AN, Kyungjun, HAM, Dongsoo, KIM, Hun, KIM, Sunghyun, SHIN, Jinhwan, HOPFER, Robert, KENSINGER, Richard D., KYAW, Moe, TALAGA, Philippe
33: US 31: 62/626,509 32: 2018-02-05
54: MULTIVALENT PNEUMOCOCCAL POLYSACCHARIDE-PROTEIN CONJUGATE COMPOSITION
00: -

Provided are mixed carrier, multivalent pneumococcal conjugate compositions comprising 21 different pneumococcal capsular polysaccharide-protein conjugates, wherein each of the conjugates includes a capsular polysaccharide from a different serotype of *Streptococcus pneumoniae* conjugated to either tetanus toxoid (TT) or CRM_{197}, wherein the *Streptococcus pneumoniae* serotypes are selected from 1, 3, 4, 5, 6A, 6B, 7F, 8, 9N, 9V, 10A, 11 A, 12F, 14, 15B, 18C, 19A, 19F, 22F, 23F, and 33F, where the capsular polysaccharides of two of serotypes 1, 3, and 5 and one or both of serotypes 15B and 22F are conjugated to TT and the remaining capsular polysaccharides are conjugated to CRM_{197}. Also provided are methods of producing the mixed carrier, multivalent pneumococcal conjugate compositions and methods of using the same for prophylaxis against *Streptococcus pneumoniae* infection or disease in a subject.

21: 2022/02745. 22: 2022/03/07. 43: 2023/08/22
51: F42B; F42D
71: OMNIA GROUP (PROPRIETARY) LIMITED
72: POSTHUMUS, Andries Willem, RORKE, Anthony John
33: ZA 31: 2019/05420 32: 2019-08-16
54: SAFELY TESTING OR PROGRAMMING DETONATORS IN AN ELECTRONIC BLASTING SYSTEM
00: -

A detonator for use in an electronic blasting system comprises an electronic module with a logic circuit and a separate firing circuit. The logic circuit includes a processor and a logic capacitor and is responsive to logging and testing at a range of voltages ranging from a lower, non firing voltage to a higher, firing voltage. The logic circuit is configured to select a mode of operation based on the voltage applied to the detonator. The firing circuit includes a firing capacitor configured to fire a fuse head of the detonator. The supply of energy to the firing circuit is controlled by the logic circuit. In use, prior to testing

the detonator at the firing voltage, the detonator is first tested the non-firing voltage to establish safe functioning of the logic circuit.

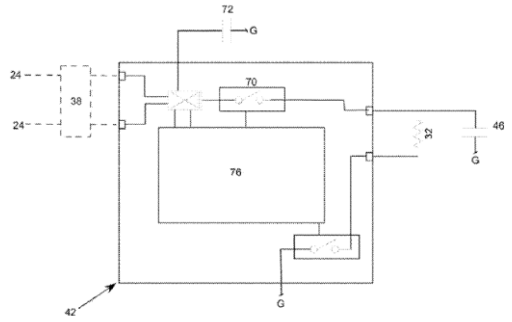

21: 2022/02746. 22: 2022/03/07. 43: 2023/08/22
51: F42B; F42D
71: OMNIA GROUP (PROPRIETARY) LIMITED
72: POSTHUMUS, Andries Willem, RORKE, Anthony John
33: ZA 31: 2019/05421 32: 2019-08-16
54: SECURE ARMING AND FIRING IN AN ELECTRONIC BLASTING SYSTEM
00: -

An electronic blasting system comprises multiple detonators connected or connectable to at least one blasting box. A plurality of logging devices are used for interrogating and programming the detonators. One of the logging devices is initialized as a key logger. The key logger is the only device in or associated with the electronic blasting system that is capable of initializing each blasting box as a control unit or as a blaster unit or as a combination control unit and blaster unit, and/or of authorising arming and firing of a blast in the electronic blasting system. A method of facilitating secure arming and firing in an electronic blasting system, using the key logger, is disclosed.

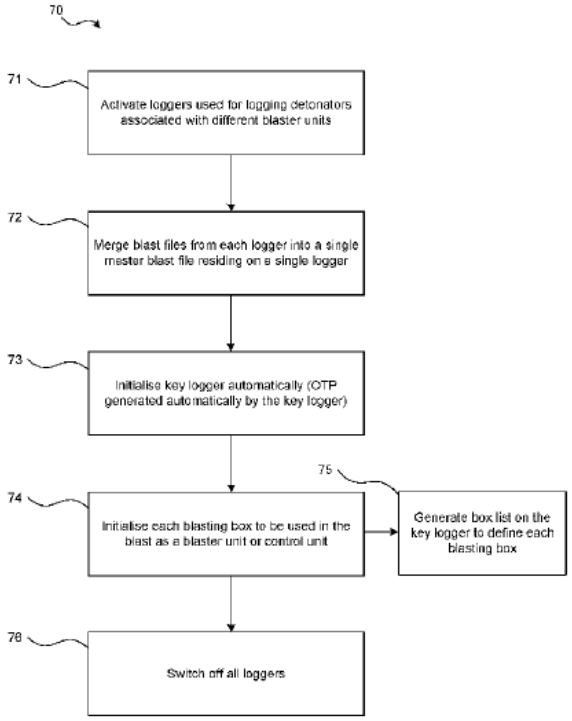

21: 2022/02747. 22: 2022/03/07. 43: 2023/08/22
51: F42B; F42D
71: OMNIA GROUP (PROPRIETARY) LIMITED
72: POSTHUMUS, Andries Willem, RORKE, Anthony John
33: ZA 31: 2019/05422 32: 2019-08-16
54: SECURE COMMUNICATION BETWEEN DEVICES IN A BLASTING SYSTEM
00: -

A method of securely communicating between devices in a blasting system, as well as a corresponding blasting system, are disclosed. The method comprises transferring a unique pairing address from a first device to a second device in the blasting system using Near-Field-Communication (NFC). The first device includes an NFC tag. A wireless pairing is established between the first device and the second device based on the pairing address to permit secure communication between the first device and the second device using short range wireless communication. This prevents unwanted pairing and/or communication with nearby devices.

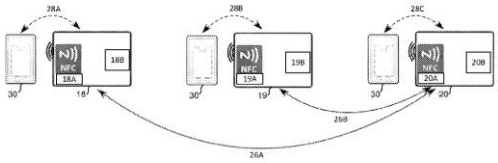

21: 2022/02863. 22: 2022/03/09. 43: 2023/08/18
51: A61P A61K C07D
71: ADAMS, Volker, LABEIT, Siegfried
72: ADAMS, Volker, LABEIT, Siegfried
33: EP 31: 19192107.1 32: 2019-08-16
54: COMPOUNDS SUITABLE FOR THE TREATMENT AND PROPHYLAXIS OF MUSCLE WASTING AND OTHER CONDITIONS
00: -
The present invention relates to a compound of the general formula I and the pharmaceutically acceptable salts thereof; where the variables are as defined in the claims and the description. The invention also relates to the compounds of formula I for use in the treatment or prophylaxis of muscle wasting conditions, of skeletal or cardial muscle atrophy, of conditions, in particular of myopathies, which are associated with an increased Muscle RING Finger 1 (MuRF1) expression and of other conditions; to the compounds of formula I for use as a medicament; to a pharmaceutical composition comprising at least one compound of formula I and to a method for treating said conditions.

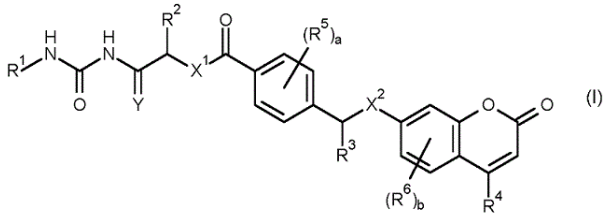

21: 2022/03000. 22: 2022/02/28. 43: 2023/10/16
51: H04N
71: B1 INSTITUTE OF IMAGE TECHNOLOGY, INC.
72: KIM, Ki Baek
33: WO 31: PCT/KR2019/011648 32: 2019-09-09
33: KR 31: 10-2018-0107256 32: 2018-09-07
54: IMAGE ENCODING/DECODING METHOD AND DEVICE
00: -
Image encoding/decoding method and device according to the present invention enable deciding of an intra-screen prediction mode of a target block, generation of a prediction block of the target block on the basis of the intra-screen prediction mode, and correction of the generated prediction block.

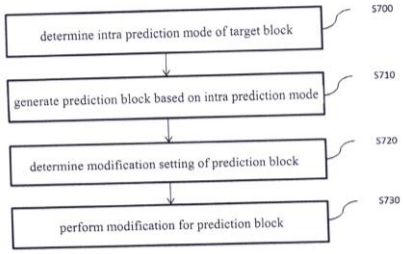

21: 2022/03161. 22: 2022/03/16. 43: 2023/08/14
51: A23J; A23L
71: Société des Produits Nestlé S.A.
72: RIDDLE, Ryan, GADDIPATI, Sanyasi
33: US 31: 62/891,485 32: 2019-08-26
54: MEAT ANALOGUE PRODUCT COMPRISING HYDRATED TEXTURED PLANT PROTEIN
00: -
The present invention relates to a meat analogue product comprising a textured plant protein, a binder, a flavor and optionally a colorant, wherein the textured plant protein is between 65 to 85% hydrated.

21: 2022/03367. 22: 2022/03/22. 43: 2023/09/18
51: A61K; A61P
71: PERIOD PILL BV
72: JANSSEN, Merel, JANSSEN, Edgar Stijn Jochem, GOLAN, Ezekiel
33: US 31: 62/891,438 32: 2019-08-26
54: TREATMENT OF MENSTRUAL CYCLE-INDUCED SYMPTOMS
00: -
The present invention relates to methods of treatment of menstrual cycle induced disorders and symptoms with cathinone, particularly methods employing 3-methyl methcathinone (3-MMC). The present invention also relates to kits comprising 3-MMC for use in the treatment of subjects suffering from menstrual cycle induced disorders and symptoms. In particular, methods and kits for therapy of menstrual cycle induced disorders and symptoms with 3-MMC for a variety of disorders and/or conditions, including PMS, PMDD and perimenstrual disorders are provided.

21: 2022/03464. 22: 2022/03/24. 43: 2023/08/16
51: G06F

71: Patientory, Inc.
72: MCFARLANE, Chrissa Tanelia
33: US 31: 16/583,147 32: 2019-09-25
54: SYSTEM AND METHOD FOR IMPROVING TREATMENT OF A CHRONIC DISEASE OF A PATIENT
00: -
An HIE system and a method for improving treatment of a chronic disease of a patient are described. The method comprises providing a user device for allowing a patient to connect to a health care network implemented over blockchain and to manage access of patient data stored over the blockchain. The method further comprises providing a physician network device for allowing a physician to connect to the health care network. A request may be received from the physician for accessing the patient data and a first parameter related to the patient. The first parameter may be correlated with patients' data to identify correlated data points relevant for the patient. The correlated data points may be sent to the physician, for being used towards the treatment of the chronic disease.

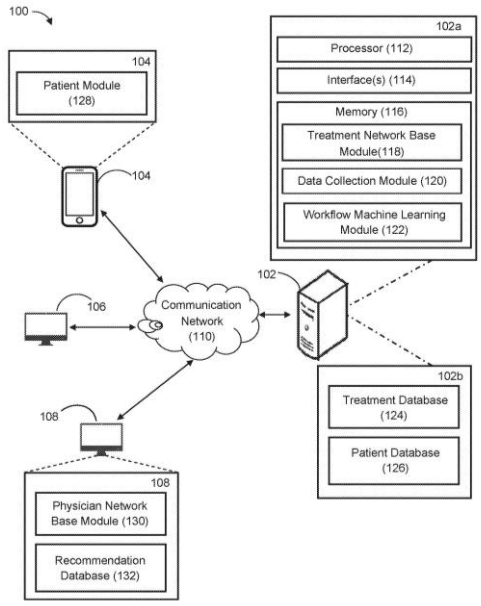

21: 2022/03515. 22: 2022/03/25. 43: 2023/08/16
51: A61K; A61P; C07D
71: Bristol-Myers Squibb Company
72: VELAPARTHI, Upender, OLSON, Richard E., DARNE, Chetan Padmakar, DASGUPTA, Bireshwar, WARRIER, Jayakumar Sankara, RAHAMAN, Hasibur, JALAGAM, Prasada Rao, ROY, Saumya, GRUNENFELDER, Denise C.
33: US 31: 62/892,799 32: 2019-08-28
54: SUBSTITUTED PYRIDOPYRIMIDINONYL COMPOUNDS USEFUL AS T CELL ACTIVATORS
00: -
Disclosed are compounds of Formula (I):(I) or a salt thereof, wherein: R1, R2, R4, R5, and m are defined herein. Also disclosed are methods of using such compounds to inhibit the activity of one or both of diacylglycerol kinase alpha (DGK) and diacylglycerol kinase zeta (DGK), and pharmaceutical compositions comprising such compounds. These compounds are useful in the treatment of viral infections and proliferative disorders, such as cancer.

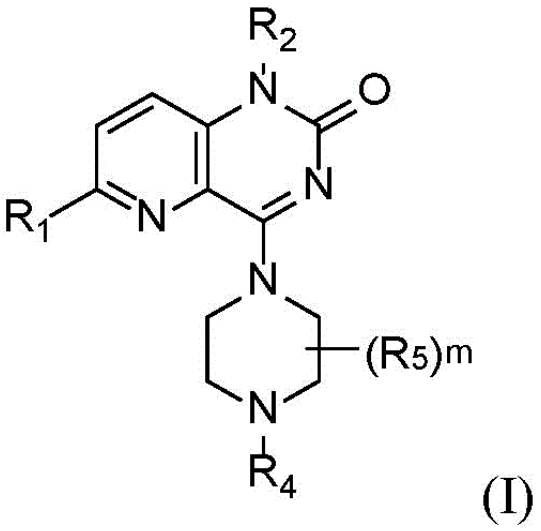

(I)

21: 2022/03596. 22: 2022/03/29. 43: 2023/08/22
51: B07B
71: DERRICK CORPORATION
72: COLGROVE, James R., PERESAN, Michael L.
33: US 31: 62/408,514 32: 2016-10-14
33: US 31: 62/488,293 32: 2017-04-21
54: APPARATUSES, METHODS, AND SYSTEMS FOR VIBRATORY SCREENING
00: -
Vibratory screening machines that include stacked screening deck assemblies are provided. In some embodiments, at least one of the vibratory screening machines can include an outer frame, an inner frame connected to the outer frame, and a vibratory motor assembly secured to the inner frame for vibrating the inner frame. A plurality of screen deck assemblies can be attached to the inner frame in a stacked arrangement, each configured to receive replaceable screen assemblies. The screen assemblies can be

secured to respective ones of the plurality of the screen deck assemblies by tensioning the screen assemblies in a direction that a material to be screened flows across the screen assemblies. An undersized material discharge assembly can be configured to receive materials that pass through the screen assemblies, and an oversized material discharge assembly can be configured to receive materials that pass over the screen assemblies.

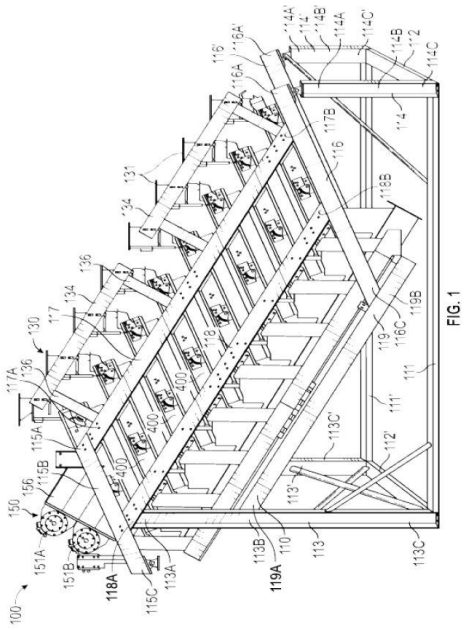

FIG. 1

21: 2022/03879. 22: 2022/04/05. 43: 2023/09/18
51: A61M
71: ANESTEASY AB
72: JONSSON, Ove
33: SE 31: 1951197-1 32: 2019-10-23
54: A CATHETER DEVICE COMPRISING A LEVERING MEMBER
00: -
The disclosure relates to a catheter device (1) comprising a catheter (2) and a hypodermic introducer needle (3) further comprising a levering member (23) adapted to be removably attached to the catheter (2) and further adapted to motion the catheter from a retracted proximal position to an advanced distal position in an axial direction in relation to the introducer needle (3), further comprising indicators to indicate at least the advanced positions of the catheter (2) being advanced a distance d, said distance d corresponding to the length of the bevelled tip (18) of the needle (3), and the catheter (2) being advanced a distance D, said distance D corresponding to > the length of the bevelled tip of the needle (3).

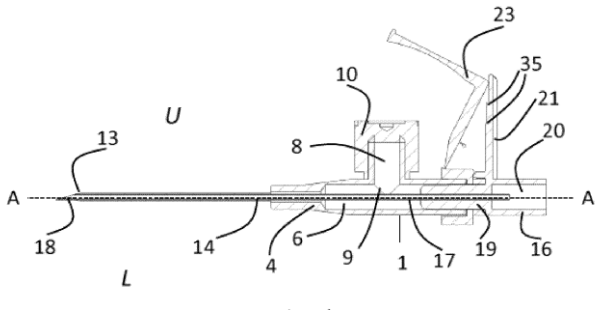

21: 2022/03976. 22: 2022/04/07. 43: 2023/08/25
51: A61B; A61M
71: DARE MB INC.
72: FARRA, Robert, PROOS, Elizabeth, JAMES, Scott W, PACELLI, Nicolas J, WANG, Hong-Ren
33: US 31: 62/929,432 32: 2019-11-01
54: TWO-STAGE MICROCHIP DRUG DELIVERY DEVICE AND METHODS
00: -
Drug delivery devices and methods of controlled drug delivery to a patient are provided. The drug delivery device may include one or two microchip elements, each of which has a body portion with one or more drug release apertures in fluid communication with at least one containment reservoir. The drug release apertures are closed off by one or more reservoir caps which can be electrically activated to open the drug release apertures. The drug delivery device also includes (i) a drug formulation disposed in the at least one containment reservoir, and (ii) at least one drug-permeable membrane. In some cases, an outer housing is spaced a distance from an exterior wall of the body portion of the microchip element, the outer housing includes the at least one drug-permeable membrane, and a depot space is defined between the drug-permeable membrane and the exterior wall of the body portion of the microchip element.

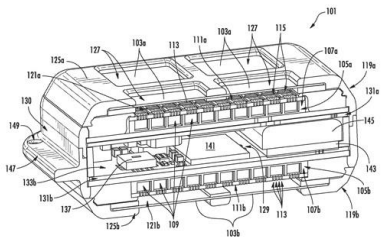

21: 2022/03984. 22: 2022/04/07. 43: 2023/08/16
51: H04L; H04W
71: QUALCOMM Incorporated
72: LEI, Jing, CHEN, Wanshi, GAAL, Peter
33: US 31: 62/913,118 32: 2019-10-09
54: PREAMBLE AND PHYSICAL UPLINK SHARED CHANNEL RESOURCE ORDERING AND SCRAMBLING IDENTIFIER GENERATION FOR TWO-STEP RANDOM ACCESS CHANNEL PROCEDURE
00: -
Various aspects of the present disclosure generally relate to wireless communication. In some aspects, a user equipment (UE) may receive, from a base station, a random access channel (RACH) occasion (RO) configuration that includes information related to ordered preamble resources. The UE may generate a preamble resource index according to various parameters selected based on the RO configuration information that relates to the ordered preamble resources. The UE may generate an uplink RACH message that includes a preamble based at least in part on the preamble resource index and a payload associated with a physical uplink shared channel (PUSCH) resource unit (PRU) mapped to the preamble resource index. After decoding the uplink RACH message, the base station may send a response message including scrambled downlink control information (e.g., based on a scrambling identifier or payload information associated with the uplink RACH message). Numerous other aspects are provided.

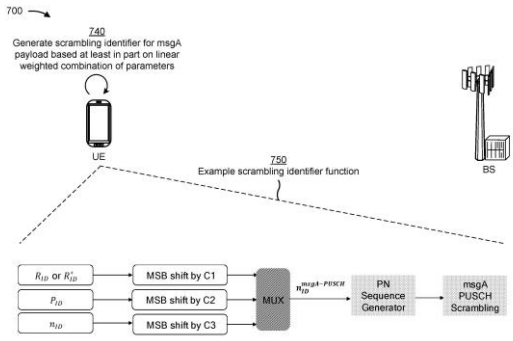

21: 2022/03987. 22: 2022/04/07. 43: 2023/08/23
51: B60B; B60C; B60P
71: GACW Incorporated
72: KEMENY, Zoltan
33: US 31: 16/596,302 32: 2019-10-08
54: OFF-HIGHWAY VEHICLE INCLUDING FRAME COUPLED GAS SPRING WHEEL ASSEMBLIES
00: -
An off-highway vehicle (820) includes an off-highway vehicle frame (811) and a motor (814) carried by the off-highway vehicle frame (811). The off-highway vehicle (820) includes wheel assemblies rotatably coupled to the off-highway vehicle frame (811) without an intervening vehicle suspension and at least some of the wheel assemblies being driven by the motor (814). Each of the wheel assemblies may include an inner rim (831) coupled to a hub (821), an outer rim (833) surrounding the inner rim (831), and gas springs coupled between the inner rim (831) and the outer rim (833) to provide a gas suspension for relative movement between the inner and outer rims.

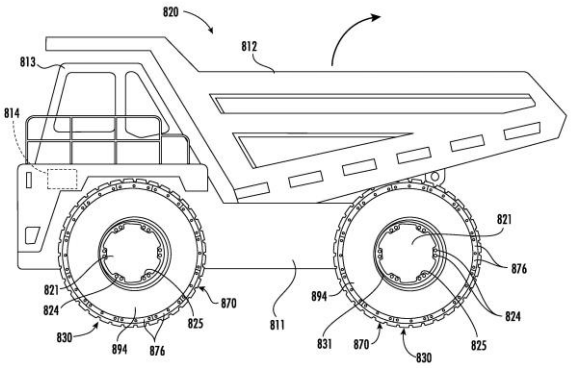

21: 2022/04091. 22: 2022/04/11. 43: 2023/08/18
51: B65D
71: Diageo Ireland Unlimited Company
72: HEINTZ, Amy, BOYCE, Jeff
33: GB 31: 1917194.1 32: 2019-11-26

54: BEVERAGE CONTAINER FOR FORMING A HEAD ON A POURED BEVERAGE

00: -

A beverage container for a nitrogenated beverage comprises at least two restricted outlet apertures (11, 12) configured to, when pouring therefrom into a secondary vessel, form jets of beverage that impinge downstream. Impingement initiates nucleation of dissolved nitrogen gas in the beverage and, as such, when poured into the vessel a creamy head of fine nitrogen/mixed gas bubbles can be formed. The restricted outlet apertures can be formed in a plate (10) over an openable mouth of the beverage container, or directly upon the container. Preferably a vent (14) or some other means is included to increase the velocity of the jets.

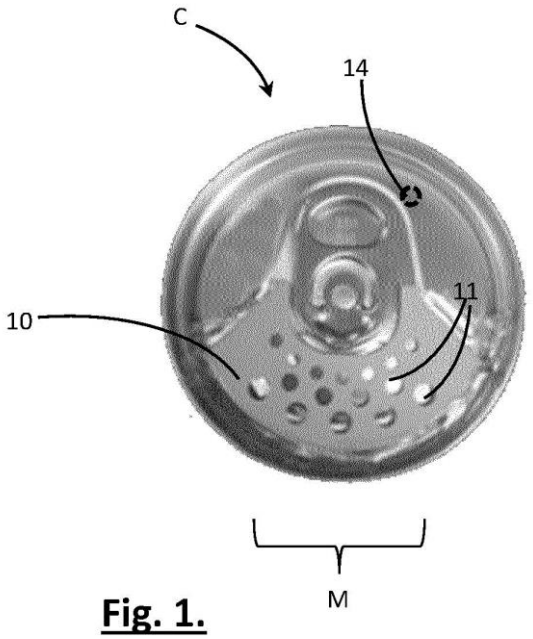

Fig. 1.

21: 2022/04144. 22: 2022/04/12. 43: 2023/10/06
51: B60P; E04H
71: METZ, Darryl Clive, METZ, Cherise Mandy
72: METZ, Darryl Clive, METZ, Cherise Mandy
33: US 31: 16/814,365 32: 2020-03-10

54: PARTIALLY COLLAPSIBLE GLAMPING AND LIVING UNIT

00: -

A partially collapsible dwelling unit which includes kitchen, bathroom, living, and sleeping facilities. The collapsible unit can be transported to and/or deployed in any location and can be used for glamping, or for emergency or temporary living purposes.

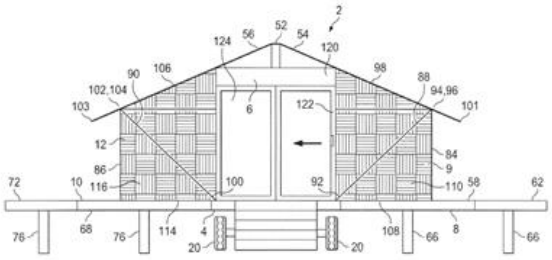

21: 2022/04157. 22: 2022/04/12. 43: 2023/09/27
51: A01N; A01P
71: Alzchem Trostberg GmbH
72: Thomas GÜTHNER, Hubertus GEHRMANN, Martin EBERL, José MARTINEZ RAMOS
33: DE 31: 10 2019 130 148.3 32: 2019-11-08

54: USE OF ACYLCYANAMIDES OR SALTS THEREOF FOR REGULATING PLANT GROWTH

00: -

The present invention relates to the use of acylcyanamides or the salts thereof as an active substance in plant-growth regulators, in particular for breaking the dormancy of fruiting woody plants.

21: 2022/04210. 22: 2022/04/13. 43: 2023/08/23
51: E21B; E21D; G01S; G05D
71: Sandvik Mining and Construction Oy
72: PESOLA, Mikko
33: EP(FI) 31: 19218039.6 32: 2019-12-19

54: POSITIONING APPARATUS, ROCK DRILLING RIG AND METHOD FOR POSITIONING

00: -

A positioning apparatus, rock drilling rig and method for positioning. The apparatus (8) is for assisting positioning of a mining work device of a rock drilling rig (1) when drilling drill holes (13). The apparatus is an optical device mountable to the mining work device and comprises one or more pattern illuminating devices (15) for producing two-dimensional (2D) light patterns (14) on a rock surface (RS). The produced light patterns are used when positioning the mining work device to a desired position.

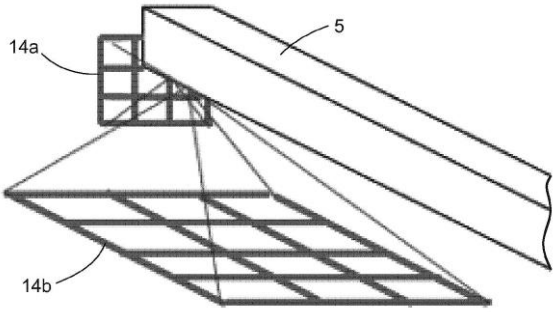

21: 2022/04446. 22: 2022/04/20. 43: 2023/08/23
51: A61K; A61P
71: Celgene Corporation
72: JANARDHANAN, Preethi, KASIBHATLA, Shailaja, LOPEZ-GIRONA, Antonia, POURDEHNAD, Michael
33: US 31: 62/923,955 32: 2019-10-21
54: METHODS OF TREATING CHRONIC LYMPHOCYTIC LEUKEMIA USING 2-(2,6-DIOXOPIPERIDIN-3YL)-4-((2-FLUORO-4-((3-MORPHOLINOAZETIDIN-1-YL)METHYL)BENZYL)AMINO)ISOINDOLINE-1. 3-DIONE
00: -
Provided herein are methods of using 2-(2,6-dioxopiperidin-3yl)-4-(2-fluoro-4-(3-morpholinoazetidin-1-yl)methyl)benzyl)amino)isoindoline-1,3-dione, or an enantiometer, a mixture of enantiomers, a tautomer, an isotopolog, or a pharmaceutically acceptable salt thereof, alone or in combination with obinutuzumab, for treating, preventing or managing chronic lymphocytic leukemia/small lymphocytic lymphoma.

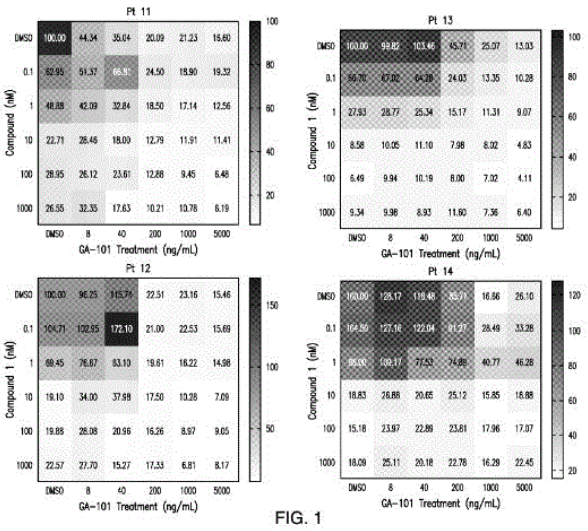

FIG. 1

21: 2022/04731. 22: 2022/04/28. 43: 2023/08/18
51: H04W
71: NOKIA TECHNOLOGIES OY
72: HIETALAHTI, Hannu
33: GB 31: 1914309.8 32: 2019-10-03
54: PLMN SELECTION BASED ON THE GEO-LOCALISATION OF A USER EQUIPMENT
00: -
A method comprises when a user equipment has moved from a first geographic territory to a second geographic territory, causing the user equipment to move from a first public land mobile network associated with the first geographic territory to a second public land mobile network associated with the second geographic territory.

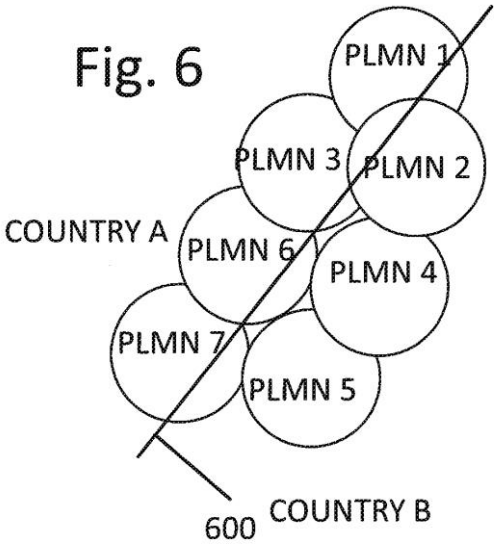

21: 2022/04744. 22: 2022/04/28. 43: 2023/08/16
51: A01N
71: Syngenta Crop Protection AG
72: ASPINALL, Ian Henry, EMMETT, Edward John, HENNESSY, Alan Joseph, DALE, Suzanna Jane, SCUTT, James Nicholas
33: GB 31: 1916600.8 32: 2019-11-14
54: FLUORINATED PHENYLACETIC ACID DERIVATIVES IN A WEED CONTROL METHOD
00: -
The present invention relates to the use of a compound of Formula (I), wherein R^1, R^2 and n are as defined herein as a herbicide. The invention further relates to agrochemically acceptable salts, to herbicidal compositions which comprise a compound of Formula (I) and to the use of compounds of Formula (I) for controlling weeds, in particular in crops of useful plants.

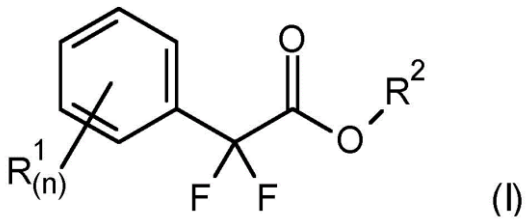

(I)

21: 2022/04815. 22: 2022/04/29. 43: 2023/08/16
51: E21D
71: Sandvik Mining and Construction Tools AB, Sandvik Mining and Construction Australia (Production/Supply) Pty Ltd
72: VALLATI, Osvaldo
33: EP(SE) 31: 19218824.1 32: 2019-12-20
54: ROCK BOLT ASSEMBLY COMPRISING A SENSOR ASSEMBLY
00: -
A sensor assembly for a rock bolt, wherein the rock bolt comprises a central rod, a split tube for being fitted around the central rod, a wedge anchor assembly fitted to the central rod, a rock plate with a hole, and a nut for attachment to an outer end of the central rod, wherein the sensor assembly comprises: a distance sensor, a bracket for attaching the distance sensor to an outer portion of the split tube, an elongate spacing member configured to be fitted around the split tube between the nut and the rock plate to keep the nut and the rock plate spaced apart, wherein the spacing member comprises an opening extending along at least a portion of the length of the spacing member, wherein the opening is sized large enough to allow movement of the bracket along a portion of the length of the spacing member with the distance sensor attached to the outer portion of the split tube by the bracket.

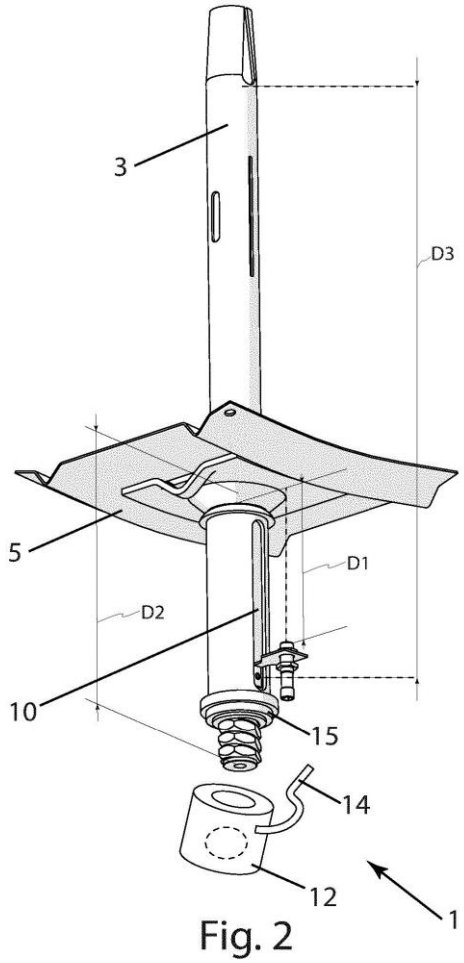

Fig. 2

21: 2022/04855. 22: 2022/05/03. 43: 2023/05/30
51: H02P H02N
71: HOLCOMB SCIENTIFIC RESEARCH LTD.
72: HOLCOMB, Robert, Ray
54: A UNIQUE METHOD OF HARNESSING ENERGY FROM THE MAGNETIC DOMAINS FOUND IN FERROMAGNETIC AND PARAMAGNETIC MATERIALS
00: -
The present disclosure relates to a power generator and method of generating AC or DC power, including the removal of reverse torque and utilizing the electromagnetic coils of a generator stator to harvest the inherent energy available in the magnetic domains of ferromagnetic and paramagnetic materials of pole pieces of a generator rotor. The method comprises: determining an excitation cycle based on a target frequency of the power generator; executing the excitation cycle by providing a current to one or more wires of the generator according to a predefined sequence to align magnetic domains of the salient pole pieces of the generator rotor to produce an evolving magnetic flux field; and routing a resultant current, generated by the magnetic flux field, to a power output. Systems and apparatuses disclosed herein comprise means for carrying out the same.

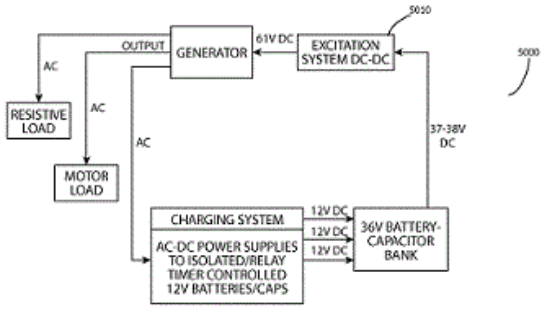

21: 2022/04896. 22: 2022/05/04. 43: 2023/08/16
51: A61K
71: Amyris, Inc.
72: CHAN, Diva, OTERI, Ro, NUNES, Ashlee
33: US 31: 62/931,978 32: 2019-11-07
54: COMPOSITIONS AND METHODS FOR DELIVERING CANNABINOIDS TO SKIN
00: -
Provided herein are compositions for delivering one or more cannabinoids to the skin of a subject and methods of using the compositions to deliver the one or more cannabinoids to the skin of a subject. The compositions contain a carrier that facilitates the delivery and permeation of cannabinoids to and through the skin. The carriers of the compositions contain squalane or mixtures of squalane and hemisqualane. The compositions described herein may serve as the base for the preparation of various cosmetics or various pharmaceuticals. The cosmetics or pharmaceuticals may be used to reduce inflammation, control pain, or prevent aging of the skin of a subject.

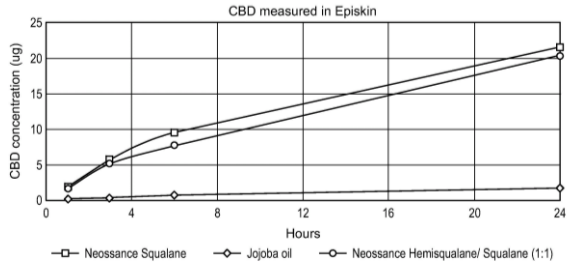

21: 2022/04904. 22: 2022/05/04. 43: 2023/08/16
51: A61K; A61P; C07K
71: Intervet International B.V.
72: VAN ROOSMALEN, Markus Hendrikus, GEVERS, Koen
33: EP(NL) 31: 19217573.5 32: 2019-12-18
54: CRYPTOSPORIDIOSIS VACCINE
00: -
The invention is based on the finding that incubating a Cryptosporidium gp40 protein with an aziridine, significantly increases its immunogenicity. When used as a vaccine, this allows a reduction of the dose, which improves economic feasibility and safety. Consequently the aziridine-treated gp40 can now be used as a safe and effective subunit-vaccine for humans or non-human-animals against Cryptosporidiosis. Specifically for new-born ruminants a vaccination by way of colostral transfer was found to be very effective in reducing clinical signs of Cryptosporidiosis, especially diarrhoea.

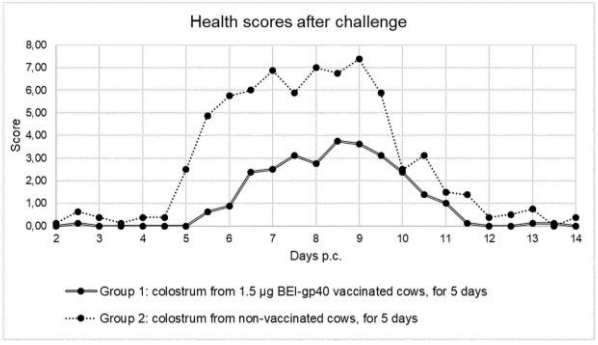

21: 2022/04906. 22: 2022/05/04. 43: 2023/09/07
51: B63B
71: NAUTI-CRAFT LTD
72: HEYRING, Christopher Brian, LONGMAN, Michael James
33: AU 31: 2019903791 32: 2019-10-08
54: STRUCTURE FOR MARINE VESSEL
00: -
A chassis module for a vessel, the chassis module having: a frame; a left linkage arrangement including at least one left hull connection and configured to movably couple the frame to at least one left hull when the left hull connection is connected to the left hull; a right linkage arrangement including at least one right hull connection and configured to movably couple the frame to at least one right hull when the right hull connection is connected to the right hull; at least one left support mount and at least one right support mount for respectively connecting to a respective support providing support for the frame relative to the respective left or right hull when hulls are connected to the hull connections; the frame having a plurality of body attachments to facilitate attachment of the chassis module to a body of a vessel.

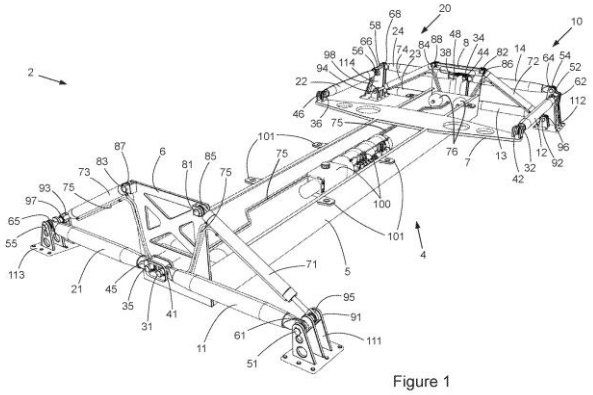
Figure 1

21: 2022/05087. 22: 2022/05/09. 43: 2023/08/22
51: F42C
71: SEJU ENGINEERING CO., LTD.
72: LEE, Won-Bae
33: KR 31: 10-2019-0131287 32: 2019-10-22
54: ELECTRONIC SELF-DESTRUCTING FUSE STRUCTURE
00: -
The present invention relates to an electronic self destructing fuse structure which releases a safety device by means of a predetermined level of setback and centrifugal force after a 40 mm grenade is launched, thereby ensuring safety, and which can explode according to the application of an impact of a predetermined level or higher, and also self destruct after a predetermined time elapses if the impact does not reach the predetermined level and an explosion does not occur, thereby preventing the occurrence of an unexploded grenade.

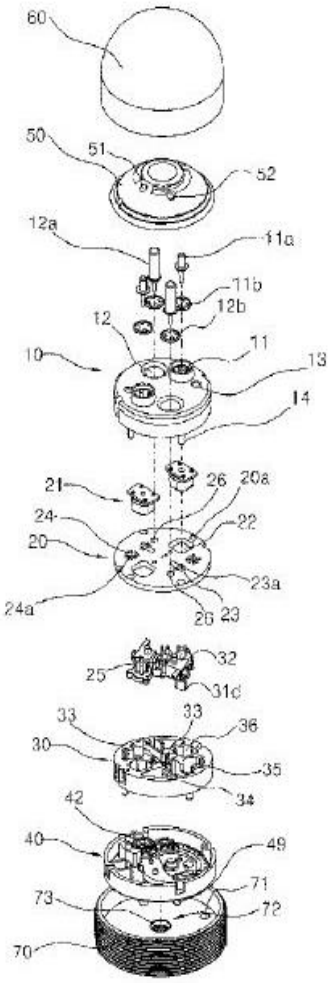

21: 2022/05088. 22: 2022/05/09. 43: 2023/08/22
51: H01M
71: SEJU ENGINEERING CO., LTD.
72: LEE, Won-Bae
33: KR 31: 10-2019-0131292 32: 2019-10-22

54: RESERVE BATTERY WITH FAST VOLTAGE RISE TIME

00: -

The present invention relates to a reserve battery allowing a voltage to quickly rise while being activated by an impact in a normal state in which electricity is not generated and, more specifically, to a reserve battery having a stacked electrode structure, the reserve battery improving the speed of an activation operation and generating a high voltage while being easily manufactured through a structure in which a main body case, instead of an ampoule of metal and glass materials, acts as an ampoule, a cover is attached through welding in a state of directly accommodating an electrolyte, and then a substrate having an anode and a cathode formed thereon is provided as a single layer or a plurality of layers, and a through film, which is broken by pressure and pushes the electrolyte toward the electrodes, is formed at the center of the cover.

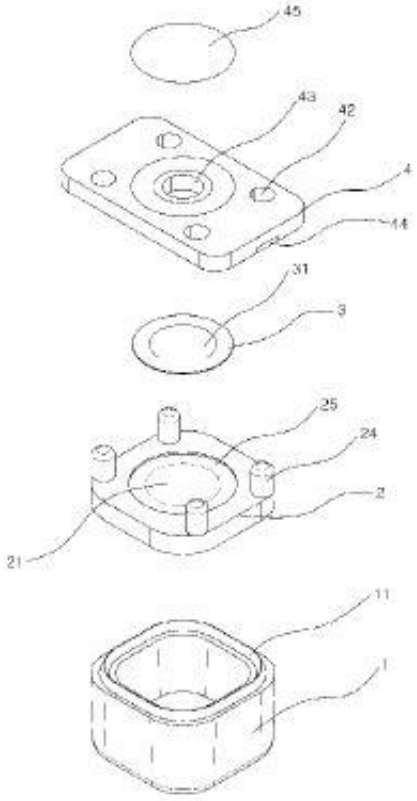

21: 2022/05142. 22: 2022/05/10. 43: 2023/08/01
51: A61K; A61P; C07D; C07F
71: Arena Pharmaceuticals, Inc.
72: JONES, Robert M., HAN, Sangdon, THORESEN, Lars, JUNG, Jae-Kyu, STRAH-PLEYNET, Sonja, ZHU, Xiuwen, XIONG, Yifeng, YUE, Dawei
33: US 31: 61/275,506 32: 2009-08-28

54: CANNABINOID RECEPTOR MODULATORS

00: -

The present invention relates to certain compounds of Formula Ia and pharmaceutical compositions thereof that modulate the activity of the cannabinoid CB2 receptor. The present invention further relates to certain compounds of Formula Ia and pharmaceutical compositions thereof that modulate the activities of both the CB1 receptor and the CB2 receptor. Compounds of the present invention and

pharmaceutical compositions thereof are directed to methods useful in the treatment of: pain, for example bone and joint pain, muscle pain, dental pain, migraine and other headache pain, inflammatory pain, neuropathic pain, pain that occurs as an adverse effect of therapeutics and pain associated with osteoarthritis; hyperalgesia; allodynia; inflammatory hyperalgesia; neuropathic hyperalgesia; acute nociception; osteoporosis; multiple sclerosis-associated spasticity; autoimmune disorders; allergic reactions; CNS inflammation; atherosclerosis; undesired immune cell activity and inflammation; age-related macular degeneration; cough; leukemia; lymphoma; CNS tumors; prostate cancer; Alzheimer's disease; stroke-induced damage; dementia; amyotrophic lateral sclerosis, and Parkinson's disease.

21: 2022/05234. 22: 2022/05/11. 43: 2023/08/03
51: H04L H04W
71: TELEFONAKTIEBOLAGET LM ERICSSON (PUBL)
72: GAO, Shiwei, FRENNE, Mattias, MURUGANATHAN, Siva
33: US 31: 62/915,463 32: 2019-10-15
54: SYSTEMS AND METHODS FOR SIGNALING STARTING SYMBOLS IN MULTIPLE PDSCH TRANSMISSION OCCASIONS
00: -
Systems and methods related to indicating starting symbols of multiple transmission occasions in a cellular communications system are disclosed. In one embodiment, a method performed by a wireless communication device comprises receiving an indication of transmission occasions for respective downlink transmissions to the wireless communication device, at least two of the downlink transmissions associated to different transmission configuration indication states. The method further comprises receiving an indication of a starting symbol and a length of a first transmission occasion of the transmission occasions and receiving an indication of a particular offset value that is to be applied for determining a starting symbol of a second transmission occasion of the transmission occasions. The method further comprises determining a starting symbol of the second transmission occasion based on the starting symbol of the first transmission occasion, the length of the first transmission occasion, and the particular offset value.

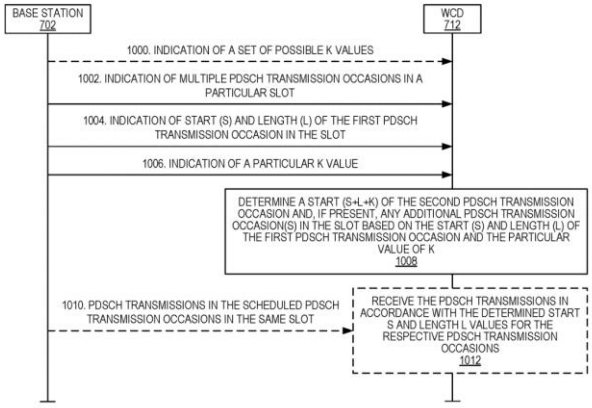

FIG. 10

21: 2022/05432. 22: 2022/05/17. 43: 2023/08/03
51: H04L
71: OMICRON ELECTRONICS GMBH
72: NUSSBAUMER, Roland, BLOCHER, Thomas, KUKUK, Matthias
33: AT 31: A50898/2019 32: 2019-10-18
54: SAFE TEST ARRANGEMENT
00: -
In order to provide a flexible test arrangement for performing measurements on a test object, according to the invention a plurality (n) of safety components (11,12,13) each having a safety module (M) which can be set to active or inactive mode and a ready state (r) which can be set to active or inactive mode are provided in a ring-like test arrangement, in which each of the safety components (11, 12, 13) carries out a number of function tests (T) cyclically, one of said function tests (T) involving testing cyclical error-free reception of a data packet (DP). One of the safety components (1, 11, 12, 13) is selected as a bus master (BM) which cyclically transmits a bus checking signal (B) in a data packet (DP1) to the next safety component (11, 12, 13) provided in the transmission direction, said bus checking signal (B) being relayed by each of the safety components (11, 12, 13) in a data packet (DP2, DP3), and, when said bus checking signal (B) is received in a data packet (DP3). the bus master (BM) identifies a closed ring-like test arrangement.

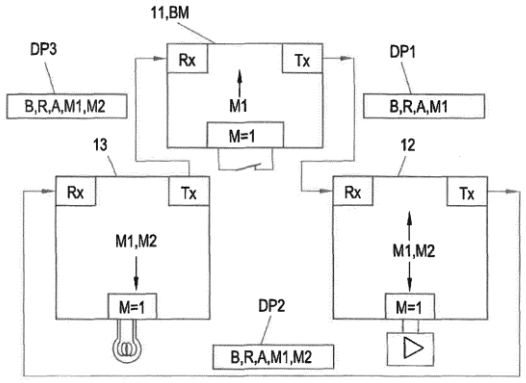

21: 2022/05547. 22: 2022/05/19. 43: 2023/08/25
51: G02B
71: AFL TELECOMMUNICATIONS EUROPE LTD
72: BAKER, James, NAYLOR, Mark
33: GB 31: 1917485.3 32: 2019-11-29
54: A SYSTEM FOR GUIDING A DIELECTRIC CABLE FROM PHASE-TO-GROUND POTENTIAL
00: -
A system is provided for guiding a dielectric cable from a conductor to an elevated support structure. The system comprises: an insulator arranged to be attached to a conductor. The insulator comprises a first bore for receiving a dielectric cable. The system further comprises an earth bond extending to a lower end of the insulator; and a downpipe extending between first and second ends. The first end of the downpipe is connected to the lower end of the insulator and the second end of the downpipe is arranged to be supported by an elevated support structure. The downpipe is for receiving the dielectric cable from the bore of the insulator.

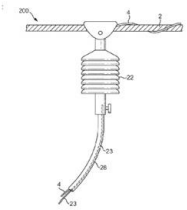

21: 2022/05726. 22: 2022/05/24. 43: 2023/08/22
51: A61F
71: OM PRAKASH GARG
72: GARG, Om Prakash
33: IN 31: 201921047949 32: 2019-11-23
54: A FEMALE CONDOM
00: -
The present disclosure relates to the field of condoms (100) and envisages a female condom (100) which comprises a sheath (102) configured in an oblong shape, an internal retainer (104) and an external retainer (106). The sheath (102) is configured to expand into an elongated configuration when a penis is inserted therein, and prevent contact of body fluids during coitus. The internal retainer (104) is located at the closed end of the sheath (102), and is configured to be squeezed before being inserted into the vagina. The internal retainer (104) is configured to fit over the cervix for minimizing the chances of removal of the condom (100) from the vagina. The external retainer (106), having an octagonal configuration, is configured on the open end of the sheath (102) to facilitate resting of said condom (100) on the vulva for avoiding slippage of the condom (100) during coitus.

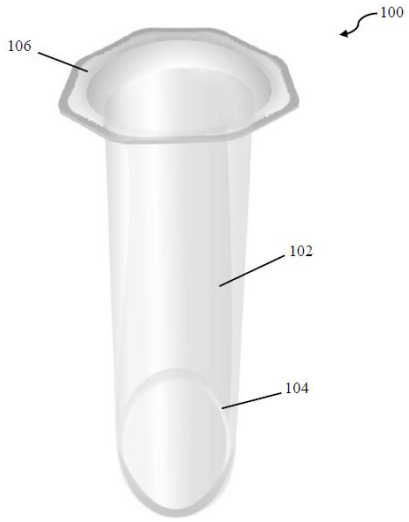

21: 2022/05756. 22: 2022/05/16. 43: 2023/08/18
51: A61K; A61P
71: Cinclus Pharma Holding AB
72: ANDERSSON, Kjell, SPRINGFELTER, Mattias, YOUSEF, Gabriella
33: SE 31: 1951255-7 32: 2019-11-04
54: ORAL FORMULATION OF X842
00: -
The invention relates to an immediate release oral formulation of X842 comprising only limited amounts of surfactant. The invention also relates to the use of the oral formulation in the treatment of gastrointestinal inflammatory diseases or gastric acid related diseases, in particular erosive gastroesophageal reflux disease (eGERD).

21: 2022/05813. 22: 2022/05/25. 43: 2023/09/18
51: C07K; A61P
71: OBLIQUE THERAPEUTICS AB
72: TRKULJA, Carolina, DAVIDSON, Max, ORWAR, Owe
33: GB 31: 1918103.1 32: 2019-12-10
54: TRPV1 EPITOPES AND ANTIBODIES
00: -
The present invention relates to antibodies that bind to TRPV1. The invention also relates to certain epitopes of the protein TRPV1. The invention also relates to immunoconjugates and compositions comprising such antibodies. The invention also provides methods of producing such antibodies. The invention further provides the use of such antibodies for therapeutic purposes, for example in the treatment of pain.

21: 2022/05944. 22: 2022/05/27. 43: 2023/08/01
51: A01C; A01B
71: ROBERT BOSCH LIMITADA
72: DE CAMPOS DIAS MONTEIRO, THIAGO, ALCICI PELEGRINI, LUCAS, GALAFASSI ARANTES, LUCAS
33: BR 31: BR 10 2019 023572 1 32: 2019-11-08
54: MAPPING SYSTEM FOR VARIABLE-RATE ROW-BY-ROW APPLICATION OF INPUTS
00: -
The present invention relates to large-scale mechanization, precision agriculture, and the concept of geographically referenced data. Specifically, the present invention relates to a mapping system for variable-rate row–by-row application of inputs, including means for processing a prescription map file (10), means for uploading the processed data, means for determining the geographical position of the processed data and the input application lines, and means for comparing the geographical positioning data and the input application lines.

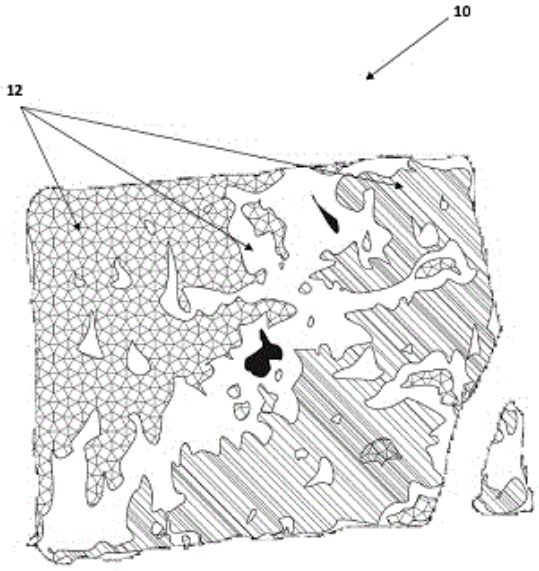

21: 2022/06106. 22: 2022/06/01. 43: 2023/08/02
51: H04W
71: TELEFONAKTIEBOLAGET LM ERICSSON (PUBL)
72: LIN, Zhipeng, HARRISON, Robert, Mark, CHITTI, Krishna, CEDERGREN, Andreas
33: CN 31: PCT/CN2019/116428 32: 2019-11-07
54: METHOD AND APPARATUS FOR RANDOM ACCESS
00: -
Various embodiments of the present disclosure provide a method for random access. The method which may be performed by a terminal device comprises determining (S211) an association between random access resource and shared channel resource for a request message for a random access procedure, based at least on whether a frequency hopping is enabled for the shared channel resource, or when a frequency hopping is enabled for the shared channel resource; and transmitting (S212), to a network node, the request message according to the association. According to embodiments of the present disclosure, an association between random access resource and shared channel resource of signaling transmissions in a random access procedure can be configured flexibly and efficiently.

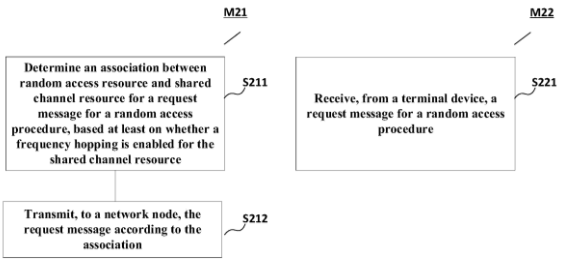

21: 2022/06308. 22: 2022/06/07. 43: 2023/07/31
51: A61K; A61P
71: UNIVERSITY OF SOUTH AFRICA
72: NTWASA, Monde
33: ZA 31: 2019/07474 32: 2019-11-12
54: EZETIMIBE AND CURCUMIN FOR USE IN CANCER TREATMENT
00: -
The invention is directed at use of ezetimibe or a pharmaceutically acceptable salt or derivative thereof in the manufacture of a pharmaceutical composition for treatment of an Mdm2-overexpressing cancer. It is also directed at use of ezetimibe, or a pharmaceutically acceptable salt or derivative thereof, in combination with curcumin in the manufacture of a pharmaceutical composition for treatment of an Mdm2-overexpressing colon cancer. The invention is further directed at a pharmaceutical composition comprising ezetimibe, or a pharmaceutically acceptable salt or derivative thereof, and curcumin for use in a method of treating an Mdm2-overexpressing cancer.

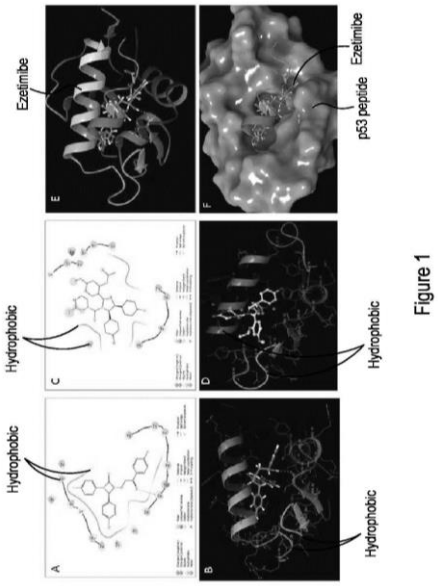

Figure 1

21: 2022/06437. 22: 2022/06/09. 43: 2023/08/23
51: C07K; C12N; A61K
71: LEGEND BIOTECH USA INC.
72: FAN, XIAOHU, ZHUANG, QIUCHUAN, FANG, XU, ZHANG, QINGSHAN, XU, MANMAN, FENG, MENG
33: CN 31: PCT/CN2019/129095 32: 2019-12-27
54: CLAUDIN18.2 BINDING MOIETIES AND USES THEREOF
00: -
Single domain antibodies that bind to Claudin18.2, and chimeric antigen receptors comprising same are provided. Further provided are engineered immune effector cells (such as T cells) comprising the chimeric antigen receptors. Pharmaceutical compositions, kits and methods of treating a disease or disorder are also provided.

21: 2022/06438. 22: 2022/06/09. 43: 2023/08/23
51: C07K; C12N; A61K; A61P
71: LEGEND BIOTECH USA INC.
72: FAN, XIAOHU, ZHUANG, QIUCHUAN, ZHAO, YUNCHENG, YANG, LEI, FANG, XU, XU, CHANGMENG
33: CN 31: PCT/CN2019/125681 32: 2019-12-16
33: CN 31: PCT/CN2020/112182 32: 2020-08-28
33: CN 31: PCT/CN2020/112181 32: 2020-08-28
54: SINGLE DOMAIN ANTIBODIES AND CHIMERIC ANTIGEN RECEPTORS TARGETING BCMA AND METHODS OF USE THEREOF
00: -

A chimeric antigen receptor (CAR) comprising a polypeptide comprising an extracellular antigen binding domain comprising a first BCMA binding moiety and a second BCMA binding moiety, wherein the first BCMA binding moiety is a first anti-BCMA single domain antibody, and the second BCMA binding moiety is a second anti-BCMA sdAb; and wherein each of the first and second sdAb is a VHH domain.

21: 2022/06481. 22: 2022/06/10. 43: 2023/08/11
51: C07D A61K A61P
71: CHENGDU BAIYU PHARMACEUTICAL CO., LTD.
72: WEI, Yonggang, CHU, Hongzhu, GAO, Yue, XIONG, Lingfeng, SU, Guizhuan, WANG, Meiwei, SUN, Yi
33: CN 31: 201911103612.2 32: 2019-11-12
33: CN 31: 202010326231.7 32: 2020-04-23
33: CN 31: 202010679491.2 32: 2020-07-15
54: AMIDE DERIVATIVE AND PREPARATION METHOD THEREFORE AND USE THEREOF IN MEDICINE
00: -
An amide derivative and an application thereof in medicine, specifically relating to the amide derivative represented by general formula (I) or a stereoisomer, solvate, a metabolic product, a deuterated product, a prodrug, a pharmaceutically acceptable salt or a co-crystal thereof, and a pharmaceutical composition containing same, and use of the compound or composition in the preparation of an NLRP3 inhibitor.

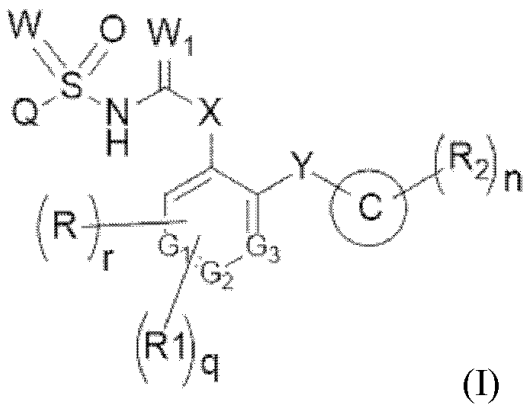

(I)

21: 2022/06754. 22: 2022/06/17. 43: 2023/09/18
51: A61K
71: 9286-3620 QUÉBEC INC.
72: CAILLARD, Romain
33: US 31: 62/949,130 32: 2019-12-17
54: ORAL DELIVERY SYSTEMS BASED ON IN SITU FORMING PROTEIN/POLYSACCHARIDE COACERVATES
00: -
An oral delivery system based on in situ forming protein/polysaccharide coacervates is described herein. The system comprises an active ingredient dispersed in a dry, homogenous powder mixture of a protein powder and a polysaccharide powder, which is able to form a protein/polysaccharides complex coacervate in situ upon immersion in gastric fluid, thereby conferring gastric protection and/or modified-release to the active ingredient. Varying the ratio of protein powder to polysaccharide powder in the oral delivery system varies the level of gastric protection and/or rate of release to the active ingredient. The ability of the system described herein to be based on natural and/or naturally-derived biopolymers provides commercial advantages in terms of regulatory approval and/or growing consumer demand for such products.

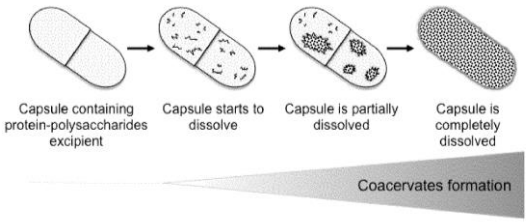

21: 2022/06886. 22: 2022/06/21. 43: 2023/08/16
51: H04B
71: NEXAT SA
72: SANSONE, Fulvio
33: NL 31: 2024538 32: 2019-12-20
54: EXTENDED SATELLITE TELECOMMUNICATION SYSTEM AND VIRTUAL HUB MODULE THEREOF
00: -
A satellite telecommunication system for effecting communication between a network and remote systems via forward and return satellite links, the satellite telecommunication system comprising: a gateway configured for establishing the forward and return satellite links; wherein the gateway comprises a satellite hub configured for receiving outgoing data and for transmitting said outgoing data to at least one of the remote systems; wherein a first traffic controlling module of the satellite hub is configured

for obtaining a first flow of the outgoing data such that said first flow follows a predetermined traffic profile; a virtual hub module configured for forwarding, from the network, the outgoing data to the satellite hub; wherein a second traffic controlling module of the virtual hub module is configured for obtaining a second flow of the outgoing data forwarded from the virtual hub module such that said second flow is unchanged by the first traffic controlling module. Figure 1

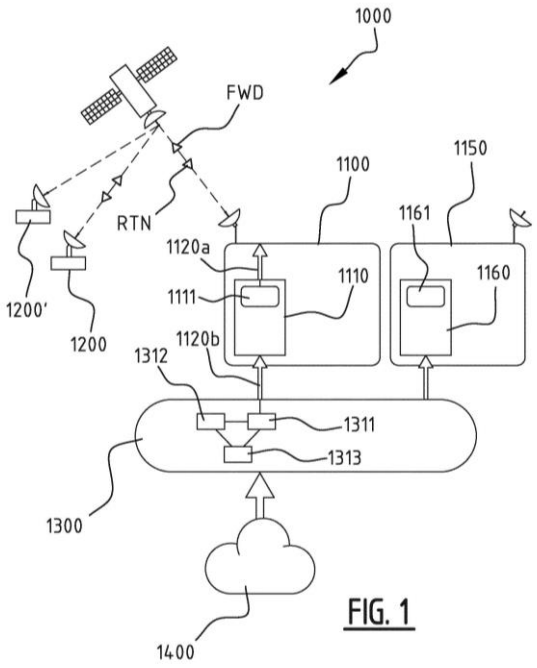

FIG. 1

21: 2022/07119. 22: 2022/06/27. 43: 2023/09/15
51: B32B
71: OCTAL, INC.
72: RAZEEM, Mohammed, DEARMITT, Chris
33: US 31: 62/942,659 32: 2019-12-02
54: MULTIMODAL POLYALKYLENE TEREPHTHALATE
00: -
A method of forming a multimodal Polyalkylene Terephthalate (PAT) can include: providing a feed of a low molecular weight (LMW) PAT, the LMW PAT having a low average molecular weight; providing a feed of high molecular weight (HMW) PAT, the HMW PAT having a high average molecular weight, wherein the low average molecular weight is lower than the high average molecular weight; mixing the feed of LMW PAT with the feed of HMW PAT in a mixer to form a multimodal PAT; and providing the multimodal PAT as output. The multimodal PAT can include: a low average molecular weight of a low molecular weight (LMW) PAT; and a high average molecular weight of a high molecular weight (HMW) PAT mixed with the LMW PAT to form the multimodal PAT, wherein the multimodal PAT is devoid of talc.

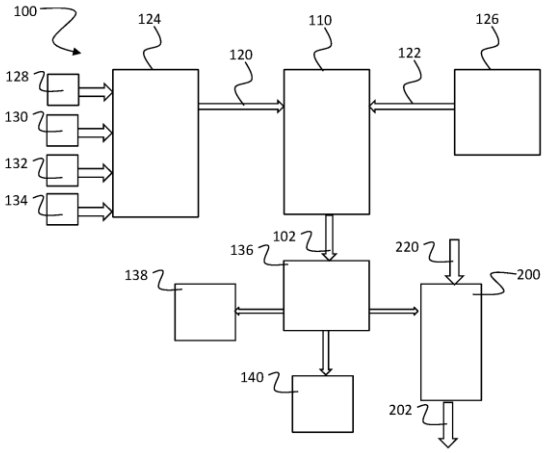

21: 2022/07155. 22: 2022/06/28. 43: 2023/08/22
51: B65F
71: ESSITY HYGIENE AND HEALTH AKTIEBOLAG
72: KLING, Robert, SVEDBERG, Agne
54: WASTE BIN AND METHOD OF SERVICING THE SAME
00: -
The present disclosure relates to a waste bin (10) for waste paper products and other types of waste, the waste bin (10) comprising: a frame (11) for supporting at least two, preferably exactly two, compartments; an upper compartment (12) supported by the frame (11) and configured to receive waste paper product, in particular, paper towels; and a lower compartment (14) supported by the frame (11) and configured to receive other types of waste; wherein the upper compartment (12) is arranged above the lower compartment (14) in a vertical direction of the waste bin, wherein the lower compartment (14) comprises a liquidimpermeable bottom section (15a) and, preferably, liquid-impermeable side-wall sections (15b), and wherein at least one of the upper and lower compartments (12, 14) is detachable from the frame (11), and wherein each of the upper compartment (12) and the lower compartment (14) is accessible for introducing waste material thereinto independently from the

respective other compartment. The present disclosure further relates to a method of servicing a waste bin.

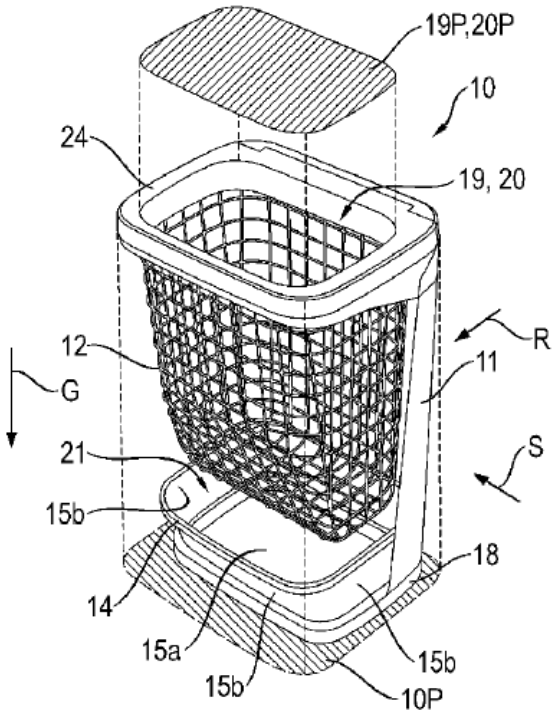

21: 2022/07266. 22: 2022/06/29. 43: 2023/09/18
51: B23K; G01B
71: ADIGE S.P.A.
72: DONADELLO, Simone, PREVITALI, Barbara, COLOMBO, Daniele
33: IT 31: 102019000023181 32: 2019-12-06
54: METHOD AND SYSTEM FOR DETERMINING AND CONTROLLING THE SEPARATION DISTANCE BETWEEN A WORKING HEAD OF A LASER PROCESSING MACHINE AND THE SURFACE OF AN OBJECT BEING PROCESSED BY MEANS OF LOW COHERENCE OPTICAL INTERFEROMETRY TECHNIQUES
00: -
A method and a system are described for determining and controlling the separation distance between a processing working head of a machine tool and the surface of a material, comprising: - generating a measurement low coherence optical radiation beam, leading the measurement beam towards the material and leading the reflected or diffused measurement beam from the surface of the material towards an optical interferometric sensor arrangement in a first direction of incidence, - generating a reference low coherence optical radiation beam, and leading the reference beam towards the optical interferometric sensor arrangement in a second direction of incidence at a preset angle of incidence with respect to the first direction of incidence of the measurement beam; - superimposing the measurement beam and the reference beam on a common region of incidence of the sensor arrangement; - detecting the position of a pattern of interference fringes between the measurement beam and the reference beam on the region of incidence; and - determining a difference in optical length between the measurement optical path and the reference optical path on the basis of the position of the pattern of interference fringes along an illumination axis of the region of incidence, which is indicative of a difference between (a) the current separation distance between the working head and the surface of the material and (b) a predetermined nominal separation distance.

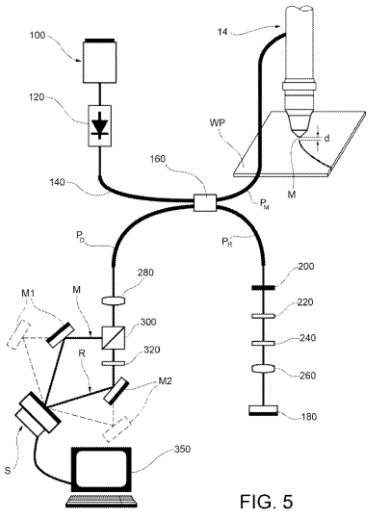

FIG. 5

21: 2022/07530. 22: 2022/07/07. 43: 2023/08/01
51: A61K
71: MINERVA NEUROSCIENCES, INC.
72: PELLEGRINI, LORENZO, KARABELAS, ARGERIS, LUTHRINGER, REMY
33: US 31: 61/756,208 32: 2013-01-24
33: US 31: 61/852,149 32: 2013-03-15
33: US 31: 61/799,482 32: 2013-03-15
54: USE OF PHENOXYPROPYLAMINE COMPOUNDS TO TREAT DEPRESSION
00: -
Disclosed herein are compositions and methods for treating depression using compositions comprising a

compound of formula I. Disclosed herein are compositions and methods for treating depression using compositions comprising phenoxypropylamine compounds and derivatives having selective affinity for and antagonistic activity against the 5-HT_{1A}receptor, as well as 5-HT reuptake inhibitory activity. In addition, compositions and methods for treating depression using compositions comprising a compound of formula II are disclosed. Methods of treating or diminishing at least one symptom of depression in a human subject with a composition comprising a compound of the formula (I) or formula (II), or a pharmaceutically acceptable salt, hydrate, or solvate thereof, are also disclosed.

21: 2022/07790. 22: 2022/07/13. 43: 2023/08/18
51: A61K A61P
71: GRAND THERAVAC LIFE SCIENCE (NANJING) CO., LTD.
72: LI, Jianqiang, GE, Jun, SUN, Jiaojiao, ZHOU, Tong, REN, Sulin, TAN, Changyao, GU, Yue, HUANG, Hongying, WANG, Shiwei, CHEN, Xiaoxiao, HUANG, Jingfeng, WANG, Xiaodong, CHEN, Yue
33: CN 31: 201911279536.0 32: 2019-12-13
54: PHARMACEUTICAL COMPOSITION AND USE THEREOF
00: -
The invention relates to the field biopharmaceutics, and relates in particular to a pharmaceutical composition. The pharmaceutical composition contains a hepatitis B surface antigen, a hepatitis B core antigen and an immunostimulatory composition; the immunostimulatory composition contains saponins and CpG oligodeoxynucleotides, or consists of a saponin-containing adjuvant and CpG oligodeoxynucleotides.

21: 2022/07897. 22: 2022/07/15. 43: 2023/08/18
51: F41G
71: SHELTERED WINGS, INC. d/b/a VORTEX OPTICS
72: CLERMONT, Todd, FARRELL, Ben
33: US 31: 62/949,778 32: 2019-12-18
54: ALIGNMENT MECHANISM
00: -
An alignment mechanism uses two adjustment plates. A first adjustment plate is pivotal about a first adjustment axis and a second adjustment plate is rotatable about a second adjustment axis. The first and second adjustment axes are perpendicular to one another. The first plate has a front portion through which the first adjustment axis passes and a rear portion having a first alignment surface and a tension spring secured to the rear portion opposite the first alignment surface. The second adjustment plate has a front portion and a rear portion having a second alignment surface and a tension spring secured between the second alignment surface and the rear portion of the first adjustment plate.

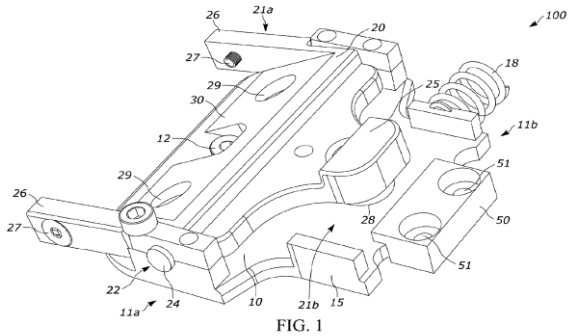

FIG. 1

21: 2022/08085. 22: 2022/07/20. 43: 2023/08/16
51: A61K A61P
71: HANMI PHARM. CO., LTD.
72: LEE, Seon Myeong, LEE, Jong Suk, KIM, Jung Kuk, LEE, Sang Hyun, OH, Euh Lim, JO, Hyo Sang, PARK, Eun Jin, LIM, Chong Yoon
33: KR 31: 10-2020-0004379 32: 2020-01-13
33: KR 31: 10-2020-0134344 32: 2020-10-16
54: THERAPEUTIC USE OF LONG-ACTING CONJUGATE OF TRIPLE AGONIST HAVING ACTIVITY WITH RESPECT TO ALL OF GLUCAGON AND GLP-1 AND GIP RECEPTORS AGAINST LUNG DISEASE
00: -
The present invention relates to a preventive or therapeutic use of a triple agonist and/or a conjugate thereof against lung disease, the triple agonist and/or conjugate thereof having activity with respect to all of glucagon and the GLP-1 and GIP receptors.

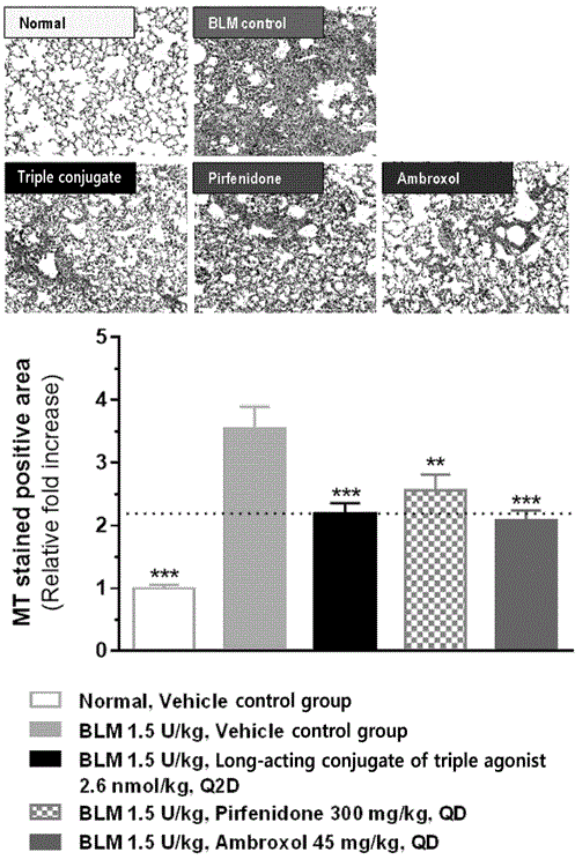

21: 2022/08109. 22: 2022/07/20. 43: 2023/08/11
51: A61K; A61P
71: VISUFARMA S.P.A.
72: BIGIONI, ANNA RITA

54: OPHTHALMIC COMPOSITION FOR THE TREATMENT OF DRY EYE DISEASE

00: -

The present invention relates to an ophthalmic composition comprising omega-3 fatty acids, Vitamin D3, Vitamin A or esters thereof and liposomes and to the methods for the preparation thereof. The present invention further relates to the use of such composition for the prevention or the treatment of dry eye disease (DED), in particular in patients undergoing surgical procedures such as cataract or the like.

21: 2022/08222. 22: 2022/07/22. 43: 2023/10/11
51: A61K; C07K; A61P
71: REGENERON PHARMACEUTICALS, INC.
72: HATSELL, Sarah, J., ECONOMIDES, Aris, N., IDONE, Vincent, J.
33: US 31: 62/975,047 32: 2020-02-11
33: US 31: 63/030,131 32: 2020-05-26

54: ANTI-ACVR1 ANTIBODIES AND USES THEREOF

00: -

The present invention provides monoclonal antibodies that bind to the Activin A type I receptor (ACVR1) protein, and methods of use thereof. In various embodiments of the invention, the antibodies are fully human antibodies that bind to ACVR1. In some embodiments, the antibodies of the invention are useful for inhibiting ACVR1-mediated bone morphogenetic protein (BMP) signal transduction, thus providing a means of treating or preventing a disease, disorder or condition associated with ACVR1.

21: 2022/08849. 22: 2022/08/08. 43: 2023/09/18
51: G01L; G01M
71: TENSAR INTERNATIONAL CORPORATION
72: CAVANAUGH, Joseph, HAMMOND, Matthew, WALLACE, John
33: US 31: 62/967,733 32: 2020-01-30
33: US 31: 62/967,736 32: 2020-01-30
33: US 31: 63/030,485 32: 2020-05-27

54: SENSOR-ENABLED SYSTEM AND METHOD FOR MONITORING THE HEALTH, CONDITION, AND/OR STATUS OF INFRASTRUCTURE

00: -

A sensor-enabled geogrid system for and method of monitoring the health, condition, and/or status of infrastructure is disclosed. In some embodiments, the sensor-enabled geogrid system includes a sensor-enabled geogrid that further includes a geogrid holding an arrangement of one or more sensors. The sensor-enabled geogrid system further includes a communication means or network for collecting information and/or data from the sensor enabled geogrid about the health, condition, and/or status of infrastructure. Further, a method of using the presently disclosed sensor-enabled geogrid system for monitoring the health, condition, and/or status of infrastructure is provided.

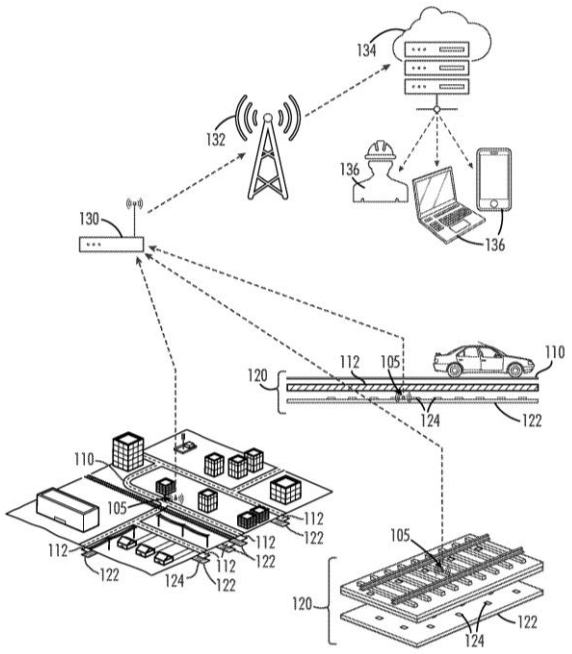

21: 2022/09069. 22: 2022/08/12. 43: 2023/08/23
51: C12N; C07K; A61P
71: LEGEND BIOTECH USA INC.
72: FAN, XIAOHU, MAO, JIE, ZHUANG, QIUCHUAN, WANG, RUIXUE
33: CN 31: PCT/CN2020/076937 32: 2020-02-27
54: ANTIBODIES AND CHIMERIC ANTIGEN RECEPTORS TARGETING GLYPICAN-3 (GPC3) AND METHODS OF USE THEREOF
00: -
Provided are anti-glypican-3 (GPC3) antibodies or antigen binding fragments thereof, and a chimeric antigen receptor (CAR) that binds glypican-3 (GPC3) containing an anti-GPC3 antibody in an extracellular domain, a transmembrane domain, and an intracellular signaling domain. Immune effector cells transduced with the disclosed CAR constructs can be used for cancer immunotherapy.

21: 2022/09615. 22: 2022/08/29. 43: 2023/10/16
51: C22F
71: HELLENIC RESEARCH CENTRE FOR METALS S.A.
72: TSIROS, Ioannis, SPATHIS, Dionysios, STASSINOPOULOS, Michael, MAVROUDIS, Andreas
33: EP 31: 20160733.0 32: 2020-03-03
54: METHOD AND INSTALLATION FOR PRODUCING ALUMINUM CAN SHEET
00: -
A method for producing aluminum can sheet comprises the following steps: providing a body made of an aluminum alloy type AA3004, AA3104 or other aluminum alloy suitable for making aluminum can sheet; heating the body to a homogenization temperature; hot rolling said body in a hot rolling mill to produce a hot rolled sheet, said hot rolled sheet exiting the hot rolling mill at a hot rolling exit temperature with a hot mill exit gauge, wherein the hot rolling exit temperature is selected to substantially avoid recrystallization of the hot rolled sheet; cold rolling the hot rolled sheet in a cold rolling mill to apply a cold reduction to produce a cold rolled sheet with a cold mill exit gauge smaller than the hot mill exit gauge; annealing the cold rolled sheet in an intermediate temperature range selected to allow recrystallization of the cold rolled sheet to obtain a recrystallized annealed sheet; cold rolling the recrystallized annealed sheet to apply a cold reduction to produce a cold rolled sheet with a final gauge.

21: 2022/10139. 22: 2022/09/13. 43: 2023/10/16
51: H04N
71: B1 INSTITUTE OF IMAGE TECHNOLOGY, INC.
72: KIM, Ki Baek
33: WO 31: PCT/KR2019/003443 32: 2019-03-25
33: KR 31: 10-2018-0034174 32: 2018-03-25
33: KR 31: 10-2018-0034882 32: 2018-03-27
33: KR 31: 10-2018-0085679 32: 2018-07-24
54: IMAGE ENCODING/DECODING METHOD AND DEVICE
00: -
An intra prediction method according to the present invention may comprise: identifying a reference pixel region designated for obtaining correlation information; determining a reference pixel processing configuration on the basis of determination of the availability of the reference pixel region; and performing intra prediction according to the determined reference pixel processing. As described above, performing intra prediction on the basis of the availability of a reference pixel according to the present invention can improve encoding performance.

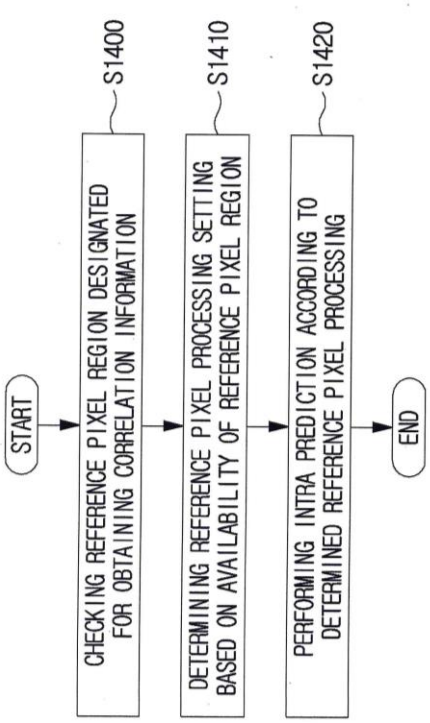

21: 2022/10140. 22: 2022/09/13. 43: 2023/10/16
51: H04N
71: B1 INSTITUTE OF IMAGE TECHNOLOGY, INC.
72: KIM, Ki Baek
33: WO 31: PCT/KR2019/003777 32: 2019-04-01
33: KR 31: 10-2018-0037812 32: 2018-04-01
54: METHOD AND APPARATUS FOR ENCODING/DECODING IMAGE
00: -
The objective of the present invention is to provide a method and an apparatus for intra prediction. In addition, the objective of the present invention is to provide a method and an apparatus for intra prediction on a sub-block unit basis. Furthermore, the objective of the present invention is to provide a method and an apparatus for determining a division and an encoding order of subblock units.

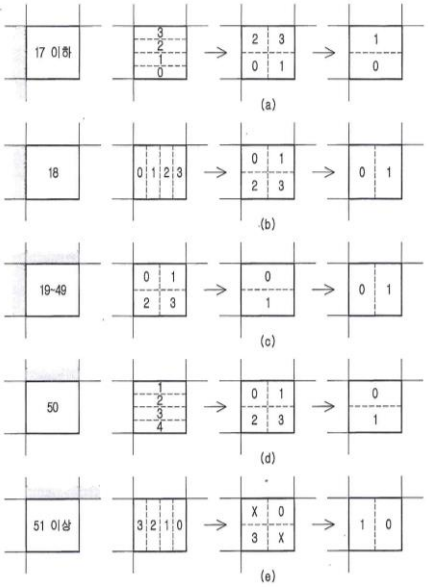

21: 2022/10936. 22: 2022/10/05. 43: 2023/09/27
51: C21D; C22C
71: ARCELORMITTAL
72: Astrid PERLADE, Kangying ZHU, Coralie JUNG
33: IB 31: PCT/IB2020/056994 32: 2020-07-24
54: COLD ROLLED AND ANNEALED STEEL SHEET AND METHOD OF MANUFACTURING THE SAME
00: -
The invention deals with a cold rolled and annealed steel sheet, made of a steel having a composition comprising, by weight percent: C: 0.03 - 0.18 % Mn: 6.0 – 11.0 % Al: 0.2 – 3% Mo: 0.05 - 0.5 % B: 0.0005 – 0.005% S ≤ 0.010 % P ≤ 0.020 % N ≤ 0.008 % and comprising optionally one or more of the following elements, in weight percentage: Si ≤ 1.20% Ti ≤ 0.050 % Nb ≤ 0.050 % Cr ≤ 0.5 % V ≤ 0.2 % the remainder of the composition being iron and unavoidable impurities resulting from the smelting, said steel sheet having a microstructure comprising, in surface fraction, - from 25% to 54% of retained austenite, - from 46% to 75% of ferrite, - less than 8% of fresh martensite, - a carbon [C]A and manganese [Mn]A content in austenite, expressed in weight percent, wherein [C]A* √[Mn]A is from 0.48 tp 1.8, - and an inhomogeneous repartition of manganese characterized by a manganese distribution with a slope above or equal to -50.

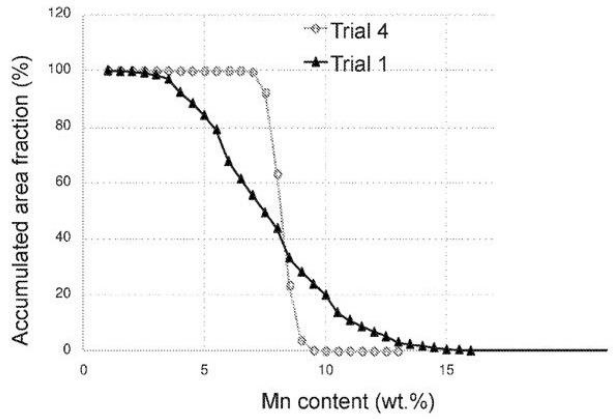

21: 2022/11287. 22: 2022/10/14. 43: 2023/08/22
51: B06B
71: DERRICK CORPORATION
72: KIRSCH, Raymond M., HOZDIC, Joseph
33: US 31: 62/632,348 32: 2018-02-19
54: ECCENTRIC VIBRATOR SYSTEMS AND METHODS
00: -
An apparatus that generates vibrational motion is disclosed. The apparatus includes a first mass, a second mass, a drive system, and a control system. The first mass is eccentrically mounted on, and configured to rotate about, a first shaft. The second mass is eccentrically mounted on, and configured to rotate about, a second shaft, with first and second shafts sharing a common axis. The drive system imparts rotational motion to first and second shafts, and the control system controls rotational frequencies, directions, and initial angles of the first and second masses. Linear, elliptical, or circular vibratory motion of the apparatus may be induced by controlling such rotational properties of the first and second masses. The apparatus may include a measurement device that measures angular position and/or velocity of the first and second masses. The control system may control the vibrational motion based on measurements taken by the measurement device.

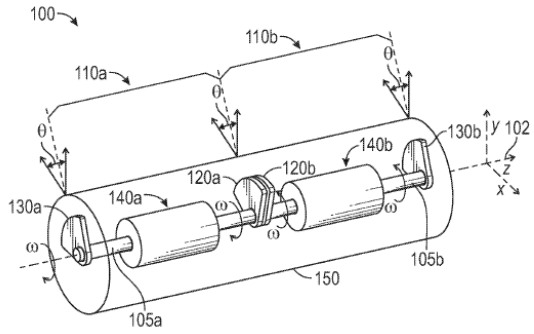

21: 2022/11451. 22: 2022/10/19. 43: 2023/09/14
51: B01D; C01B; C02F; C05B; C05G
71: LOBANOV, Sergey
72: LOBANOV, Sergey
33: US 31: 16/832,507 32: 2020-03-27
54: PROCESS AND APPARATUS FOR SIZED NUTRIENT RECOVERY FROM WASTEWATER BY ELUTRIATION
00: -
Processes and apparatus are provided for recovery of dissolved species from wastewater streams, in the form of precipitates sized by elutriation. The processes may for example be controlled so that the recovered sized solids are in the form of relatively insoluble plant nutrients, such as struvite. The extracted nutrients may for example include solid species of phosphorus, and/or nitrogen, and/or potassium.

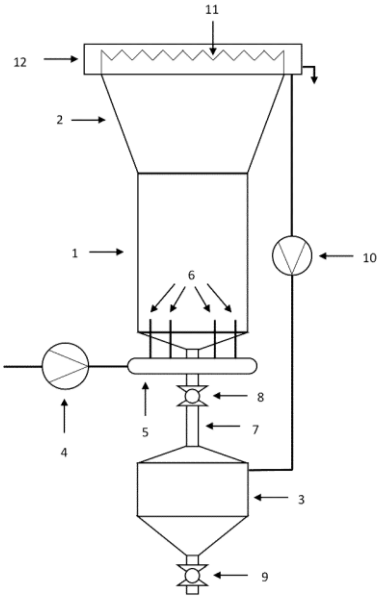

21: 2022/11667. 22: 2022/10/26. 43: 2023/08/07
51: A61P; C07K

71: TENEOONE, INC.
72: HARRIS, KATHERINE, SCHELLENBERGER, UTE, VAFA, OMID, TRINKLEIN, NATHAN, VAN SCHOOTEN, WIM, FORCE ALDRED, SHELLEY, PHAM, DUY, CLARKE, STARLYNN
33: US 31: 63/017,589 32: 2020-04-29
33: US 31: 63/108,796 32: 2020-11-02
54: MULTISPECIFIC HEAVY CHAIN ANTIBODIES WITH MODIFIED HEAVY CHAIN CONSTANT REGIONS
00: -
Multispecific, human heavy chain antibodies (e.g., UniAbsTM) that have modified heavy chain constant regions that impart advantageous properties are provided. The invention further concerns methods of making such antibodies, compositions, including pharmaceutical compositions, comprising such antibodies, and their use to treat disorders that are characterized by expression of one or more of the binding targets described herein.

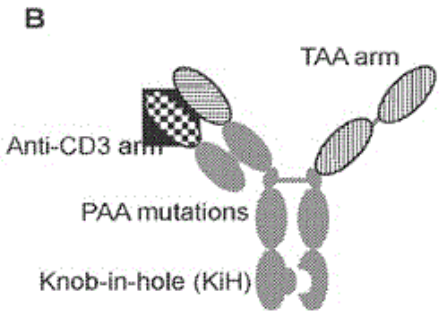

21: 2022/11850. 22: 2022/10/31. 43: 2023/08/16
51: D03C; D03D
71: CASTENS, Sybille
72: CASTENS, Sybille
33: DE 31: 20 2020 002 061.3 32: 2020-05-12
54: LOOM WITH MOVABLE GUIDE BEAMS
00: -
The invention relates to a loom for the insertion of endless, or loosely connected material, or material in pieces. According to the invention, the warp threads (4.a and 4.b) run in a downward direction from the warp beam (1.a and 1.b) to the cloth roll (5) and are held there individually by hooks (3.a and 3.b), which are anchored in guide beams (2.a and 2.b) between the upper warp beams (1.a and 1.b) and lower cloth roll (5).

Fig. 1

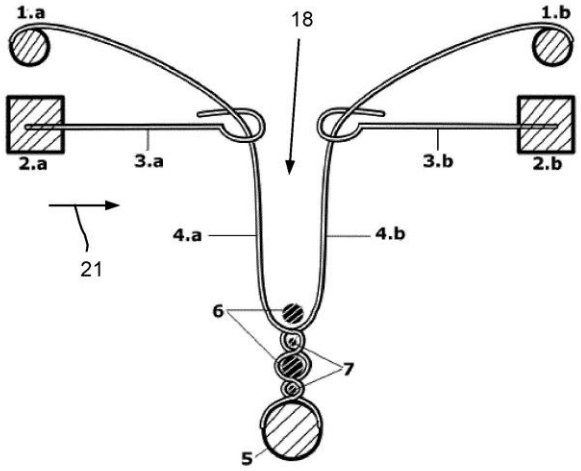

21: 2022/12248. 22: 2022/11/09. 43: 2023/09/14
51: A61K
71: ZEPHAPHARM LTD
72: TAYLOR, John
54: PHARMACEUTICAL COMPOSITIONS COMPRISING FLUBENDAZOLE
00: -
A pharmaceutical composition comprising flubendazole or a pharmaceutically acceptable salt, solvate, hydrate, N-oxide, or prodrug thereof and a moderate or strong cytochrome P450 1A2 isoenzyme (CYP1A2) inhibitor for use in medicine.

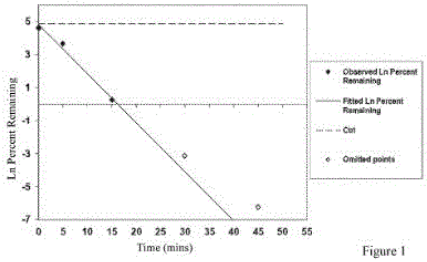

Figure 1

21: 2022/12644. 22: 2022/11/21. 43: 2023/07/25
51: A61P; C05G
71: Agro Innovation International
72: BRIAND, Xavier (Deceased), HOUDUSSE, Fabrice, COMBY, Morgane, BEZIAT, Matthieu C.
33: FR 31: 2005016 32: 2020-05-19
54: USE OF POLYAMINES, TYRAMINE AND/OR A PLANT EXTRACT CONTAINING SAME TO STABILISE MICROORGANISMS
00: -
The invention relates to the use of polyamines, tyramine and/or a plant extract containing same to stabilise microorganisms under environmental

stress, such as oxidative stress, osmotic stress or saline stress, heat stress, acid-base stress and/or stress linked to competitor microorganisms; and a composition comprising (a) polyamines, tyramine and/or a plant extract containing same, and (b) microorganisms.

21: 2022/12966. 22: 2022/11/29. 43: 2023/08/11
51: B29D
71: Bridgestone Europe NV/SA
72: PONTONE, Roberto, GENTILI, Arnaldo
33: IT 31: 102020000009493 32: 2020-04-30
54: METHOD AND SYSTEM FOR APPLYING A LAYER OF SOUNDABSORBING MATERIAL TO THE SURFACE OF AN INNER CAVITY OF A PNEUMATIC TYRE
00: -
A method and a system (1) for applying a layer (2) of sound-absorbing material to the inner surface (3) of a cavity (4) of a pneumatic tyre (5) comprising an applicator device (9) having an applicator roller (10) for implementing the 5 application of the layer (2) of sound-absorbing material to the inner surface (3) after the removal of a lining (8) and arranged, in use, at a position directly facing and in proximity to said inner surface (3) and at a distance from the inner surface (3) that substantially approximates the thickness of the layer (2) of sound-absorbing material; a roller (11) for winding the lining (8) after the 10 separation from the layer (2) of sound-absorbing material; and synchronization means (13) implemented by means of a transmission member (14) in order to make it possible to maintain substantially uniform the speed of the applicator roller (10) and the winding roller (11).

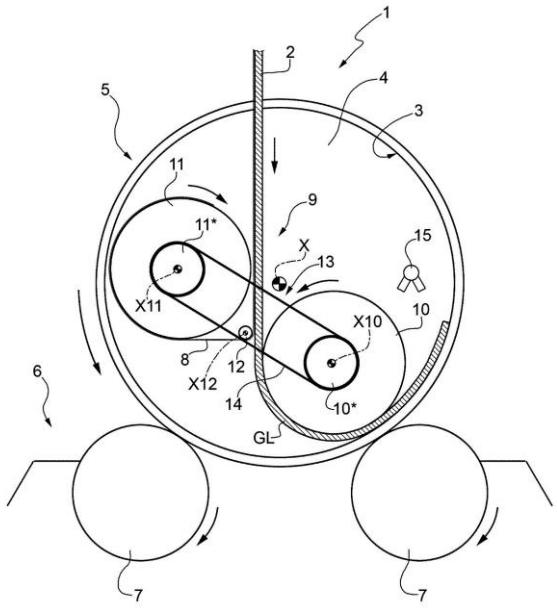

21: 2022/13324. 22: 2022/12/08. 43: 2023/07/26
51: E21B
71: MAMMOTH PLANT AND EQUIPMENT PROPRIETARY LIMITED
72: GOUWS, Juan
33: ZA 31: 2020/05061 32: 2020-08-17
54: A CONNECTOR ASSEMBLY FOR A DRILLING APPARATUS
00: -
A connector assembly 10 for a drilling apparatus for connecting a drill motor to a drill pipe, comprises a top drive unit 12 connectable to the drill motor and a lower floating connector unit 14 connectable to a drill pipe. The top drive unit 12 includes upper and lower carrier structures including spaced drive bodies 22 and driven bodies 36, respectively, wherein torque applied by the drill motor is transmitted to the lower carrier structure via rotational engagement of the driven and drive bodies. A shock absorbing material is located between the drive and driven bodies for absorbing shocks acting between them. The lower carrier structure further includes spaced, downwardly-extending drive rods 42 slidingly received in guide holes 66 in the flange plate 64 for transmitting a torque to the flange plate 64 while allowing for movement within the guide holes thereby attenuating impact forces when connecting the floating connector unit 14 to a drill pipe.

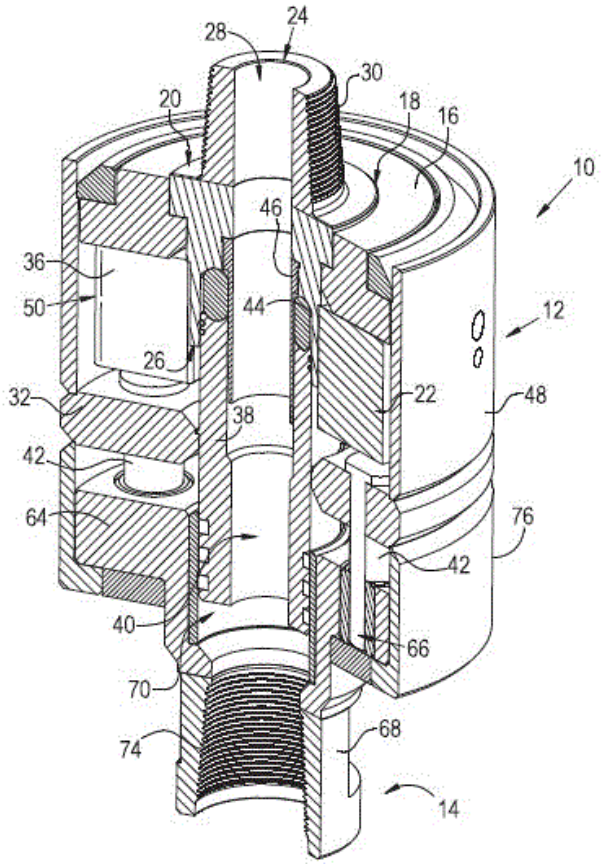

21: 2022/13425. 22: 2022/12/12. 43: 2023/07/25
51: A61C
71: GALLEGO, Jean Welingthon Kraft
72: GALLEGO, Jean Welingthon Kraft, DA SILVA, Fábio Augusto
33: BR 31: 20 2020 011065 4 32: 2020-06-02
54: DENTAL IMPLANTOLOGY USING SPHERICAL COMPONENTS
00: -
The present invention pertaining to the field of dental implantology uses spherical components, particularly in fixed and movable prostheses, and is designed to form a new implantology system aimed at preventing the accumulation of microorganisms that cause peri-implantitis and compromise the osseointegration of the implant, the components being made from titanium and/or surgical steel and together forming this new odontology system with excellent locking characteristics and reduction of the retention of microorganisms, improving asepsis and considerably impeding the development of infections. The invention consists of an implant (1) or Morse taper (10) or external hexagon (14) or internal hexagon (17) spherical intermediate elements and an UCLA abutment (8), providing the advantages of greater angulation of the prosthesis from 0° to 45°, versatility, rigidity in the assembly, torque and mechanical strength to withstand the forces generated during chewing.

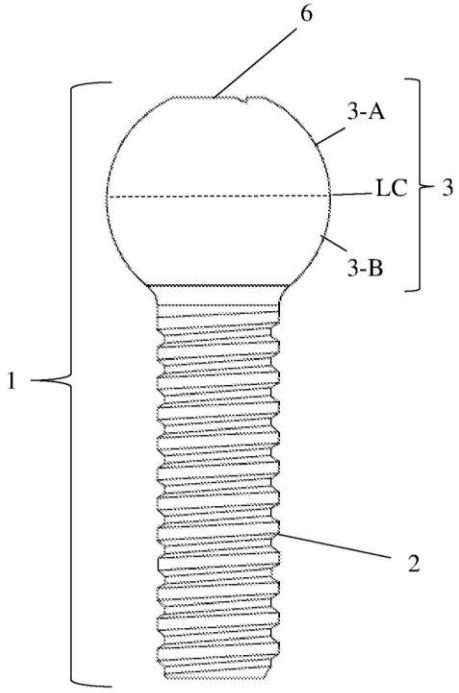

21: 2022/13486. 22: 2022/12/13. 43: 2023/08/14
51: A01N; A61K; A61P
71: BEEOTEC Holding S/A
72: COSTA, Francisco Eduardo De Carvalho, RIBEIRO, Maria Cristina Marcucci
33: BR 31: 10 2020 009939 6 32: 2020-05-19
54: NATURAL ANTIBACTERIAL AND ANTIVIRAL BIOLOGICAL COMPOSITIONS, COMPOUNDS, METHOD FOR OBTAINING SAME, AND USE THEREOF
00: -
The present invention relates to a natural antibacterial and antiviral biological composition for use in hospitals and homes, in particular a composition that includes ricinoleic acid derived from the extraction of castor oil, diethanolamine and propolis, a method for obtaining the composition, and the use thereof. The invention can be used to control various pathogenic microorganisms, such as bacteria belonging to the genera Staphylococcus, Pseudomonas, Enterobacter and Bacillus, and also hospital-environment fungi (filamentous and yeast-

like) and phytopathogenic fungi (Colletrotichum fragariae). The product can be sprayed on biotic and abiotic surfaces, and unwoven fabric can subsequently be used to remove organic material, including microorganisms. The product can also be used to disinfect medical, dental and hospital items by immersion followed by quick rinsing.

21: 2022/13562. 22: 2022/12/14. 43: 2023/08/23
51: A61K; A61P; C07D
71: Eisai R&D Management Co., Ltd.
72: YOSHIDA, Yu, KITA, Yoichi, KOTAKE, Makoto, SORIMACHI, Keiichi, OHFUSA, Toshiyuki, MOTOKI , Takafumi, ASABA , Taro
33: JP 31: 2020-122864 32: 2020-07-17
54: SUBSTITUTED PIPERIDINE COMPOUNDS AND THEIR USE
00: -
The present invention provides: compounds that have an agonist activity against the orexin receptor type-2 and that are represented by formula (I), (II), (III), and (IV); and pharmaceutically acceptable salts thereof.

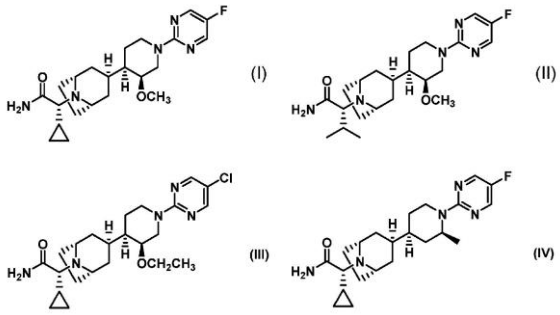

21: 2022/13609. 22: 2022/12/15. 43: 2023/07/25
51: A01K
71: Ynsect
72: SARTON DU JONCHAY, Thibault, ESCALANTE, Pedro, COMPARAT, Solène, ESCAROZ CETINA, Arturo, CHÂTEAU, Mathieu
33: FR 31: 2006379 32: 2020-06-18
54: DEVICE FOR SORTING INSECTS FOR SORTING A MIXTURE COMPRISING NYMPHS
00: -
The invention relates to a method for sorting insects comprising the successive steps of: - supplying (S1) a mixture comprising nymphs; and - sieving (S3), which allows the nymphs to be separated from the remainder of the mixture, comprising sieving (S4) said mixture with a plastic screen sieve. This method can be supplemented by densimetric sorting. The invention also relates to a corresponding device for sorting insects.

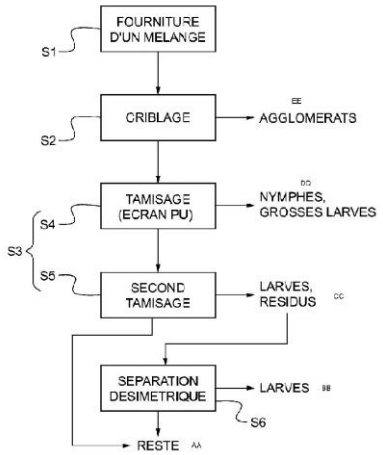

Fig.1

S1 SUPPLYING A MIXTURE
S2 SCREENING
S4 SIEVING (PU SCREEN)
S5 SECOND SIEVING
S6 DENSIMETRIC SEPARATION
AA REMAINDER
BB LARVAE
CC LARVAE, RESIDUES
DD NYMPHS, LARGE LARVAE
EE AGGLOMERATES

21: 2022/13851. 22: 2022/12/21. 43: 2023/08/02
51: C07F; C08G; C09C
71: SHANDONG SILICON TECHNOLOGY NEW MATERIAL CO., LTD.
72: KONG, Fanzhen, QU, Yuan, YANG, Tiantian, KONG, Linggang, LI, Hanghang, LU, Haifeng, QI, Shilin, LI, Pengtao
33: CN 31: 202210011879.4 32: 2022-01-07
54: MODIFIED VINYL SILANE AS WELL AS PREPARATION METHOD AND APPLICATION THEREOF
00: -
The present invention provides a modified vinyl silane as well as a preparation method and an application thereof. Oily groups (silicone oil group or ring opening group of dimethylcyclosiloxane) are grafted onto vinyl silane to obtain a modified vinyl silane, and the resulting modified vinyl silane has increased oiliness, low viscosity and enhanced dispersion; when used as a coupling agent for organic and/or inorganic powder, the modified vinyl silane can be grafted uniformly and stably onto the

organic and/or inorganic powder; the modified powder has good dispersion, and the stability of the modified materials is improved. The present invention provides a method for preparing the modified vinyl silane, wherein vinyl silane and a modifying agent are subjected to rearrangement reaction under the action of a catalyst; the modifying agent has high oiliness and good dispersion, and can enhance the dispersing ability of the modified vinyl silane.

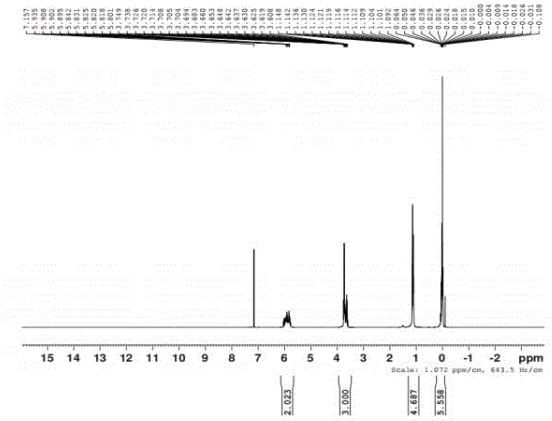

21: 2022/13859. 22: 2022/12/21. 43: 2023/08/02
51: G10L
71: FRAUNHOFER-GESELLSCHAFT ZUR FÖRDERUNG DER ANGEWANDTEN FORSCHUNG E.V.
72: RAVELLI, Emmanuel (Deceased), MARKOVIC, Goran, KIENE, Jan Frederik, REUTELHUBER, Franz, DÖHLA, Stefan, FOTOPOULOU, Eleni
33: EP 31: 20184555.9 32: 2020-07-07
54: AUDIO DECODER, AUDIO ENCODER, AND RELATED METHODS USING JOINT CODING OF SCALE PARAMETERS FOR CHANNELS OF A MULTI-CHANNEL AUDIO SIGNAL
00: -
Audio codec including a decoder for decoding a multi-channel audio signal comprising audio data and information on jointly encoded scale parameters, the decoder comprising: a scale parameter decoder (220) for decoding the information to obtain first and second scale parameters; and a signal processor (210) for applying first and second scale parameters to a first and second channel representation derived from the data to obtain the first and second channel of the decoded audio signal, wherein the scale parameters comprise information on a first and second group of scale parameters, the scale parameter decoder (220) being configured to combine a scale parameter of the first group and a scale parameter of the second group using a first combination rule to obtain a scale parameter of the first set, and using a second combination rule being different from the first combination rule to obtain a scale parameter of the second set.

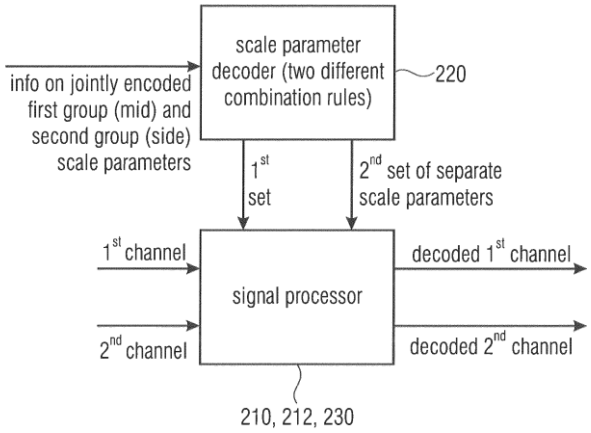

Fig. 8a
(DECODER)

21: 2022/13871. 22: 2022/12/21. 43: 2023/08/14
51: E05B; G07C
71: Allink Co., Ltd.
72: KIM, Kyung Dong
33: KR 31: 10-2020-0079340 32: 2020-06-29
54: METHOD FOR UNLOCKING VEHICLE DOOR USING MOBILE TERMINAL
00: -
The present invention provides a method for unlocking a vehicle door using a mobile terminal. The unlocking method comprises: authenticating, by a mobile key management server, a user and a smartphone of the user; authenticating, by the mobile key management server, a vehicle having a door to be unlocked using the authenticated smartphone; generating, by the mobile key management server, a mobile key issuance algorithm corresponding to the authenticated vehicle and smartphone; issuing, by the mobile key management server, a mobile key, using the generated mobile key issuance algorithm, in response to a request from the smartphone; receiving, at the mobile key management server, the issued mobile key via the smartphone and the

vehicle; confirming, by the mobile key management server, whether the issued mobile key matches the received mobile key; and requesting, by the mobile key management server, the vehicle to unlock the door thereof, when the issued mobile key matches the received mobile key.

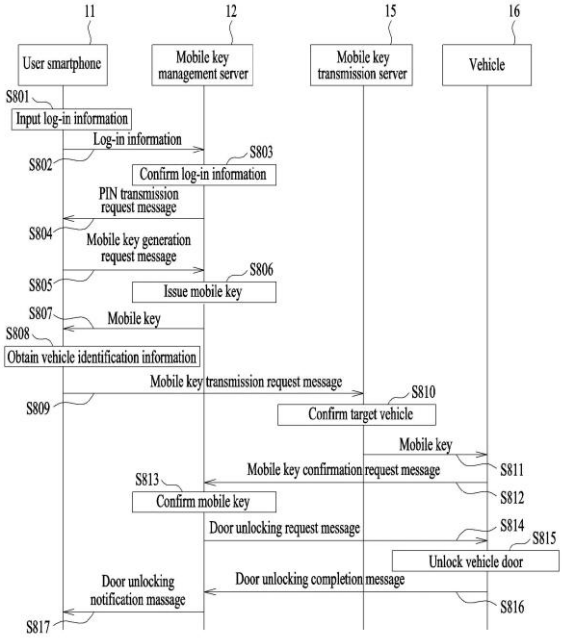

21: 2022/13890. 22: 2022/12/21. 43: 2023/08/01
51: A61K; A61P
71: PsyRx Ltd.
72: HOLZER, Asher
33: US 31: 63/046,791 32: 2020-07-01

54: COMPOSITIONS AND METHODS FOR TREATING PSYCHIATRIC DISORDERS OR SYMPTOMS THEREOF

00: -

The present invention provides pharmaceutical compositions and methods for treating psychiatric disorders, such as depression. The pharmaceutical compositions comprise a combination of ibogaine or derivative thereof and an antidepressant.

21: 2022/13893. 22: 2022/12/21. 43: 2023/08/14
51: B08B
71: FONTECHA CUETOS, Evaristo, CARRERES Y ASOCIADOS GESTORA EN INMOBILIARIA Y MEDIO AMBIENTE, SL
72: FONTECHA CUETOS, Evaristo
33: ES 31: P202030521 32: 2020-06-03

54: SYSTEM AND METHOD FOR THE SELECTIVE EXTRACTION OF VISCOUS HYDROCARBONS FROM TANKS AND OTHER CONTAINERS

00: -

A system and a method for the selective extraction of viscous hydrocarbons from tanks and other containers (1), comprising the following components for heating the hydrocarbons: a steam ejector (3), in which there takes place an eddy diffusion of its drive steam with the gases it aspirates by means of the Venturi effect; and a perimetric heating conduit (5) attached to the outside of the tank or container. The method comprises the following operations: heating a surface layer of hydrocarbons by means of the gases injected by the steam ejector (3), causing a selective flow of hot hydrocarbons to the perimetric conduit (5); localized heating of the hydrocarbons with the perimetric conduit, causing the precipitation of water and a selective flow of the hottest hydrocarbons to an extraction pump (7, 8); and extracting the precipitated water and the hydrocarbons flowing selectively from the perimetric conduit by means of two pumps (7, 8).

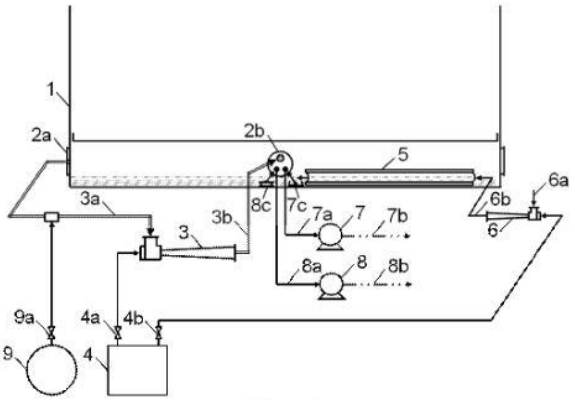

21: 2022/13922. 22: 2022/12/22. 43: 2023/08/14
51: G01N
71: SHENZHEN GESHILE TECHNOLOGY CO., LTD.
72: CHI, XIAO GUI, LI, ZE JUAN, GAO, SHUAI
33: CN 31: 2022114263844 32: 2022-11-15

54: DETECTION METHOD FOR COBALT CONTENT IN A BATTERY ELECTRODE

00: -

The present application discloses a detection method for cobalt content in a battery electrode. The detection method comprises: soaking and rinsing a battery electrode to be detected, then baking the battery electrode to be detected, and then naturally

cooling the battery electrode to be detected after the baking; placing the battery electrode to be detected after the naturally cooling in an acidic solution for heating and stirring until the reaction of the battery electrode to be detected ends, so as to obtain a first solution, extracting a solution to be detected from the first solution; detecting the concentration of cobalt in the solution to be detected, and obtaining the cobalt content in the battery electrode to be detected based on the concentration of cobalt in the solution to be detected.

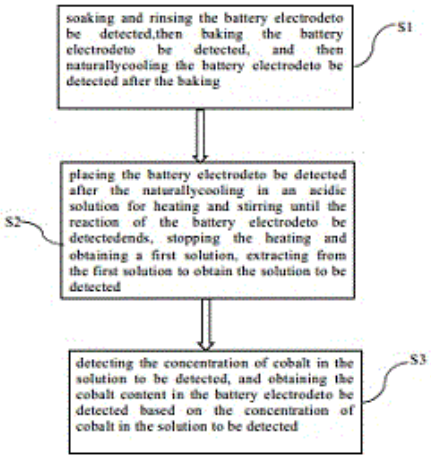

21: 2022/13923. 22: 2022/12/22. 43: 2023/08/14
51: H01M
71: SHENZHEN GESHILE TECHNOLOGY CO., LTD.
72: CHI, XIAO GUI, LI, ZE JUAN, GAO, SHUAI
33: CN 31: 2022114324265 32: 2022-11-15
54: A METHOD OF MODIFYING THE SURFACE OF A METALLIC ZINC NEGATIVE ELECTRODE WITH A COMPOSITE CLADDING LAYER
00: -
A method of modifying the surface of a metallic zinc negative electrode by a composite cladding layer is disclosed, taking the metallic zinc negative electrode as a substrate, and cladding the surface of the metallic zinc negative electrode substrate with a composite cladding layer of alloy layer and inorganic zinc salt layer. It includes steps: Step 01, preparing an inorganic acid solution containing an inorganic metal salt; Step 02, impregnating the metallic zinc negative electrode substrate in the inorganic acid solution; Step 03, obtaining the zinc metal negative electrode with the composite cladding layer by heating, ultrasonication, stirring treatment and natural drying. The present invention uses a inorganic acid containing inorganic metal salts for surface modification of metallic zinc negative electrode material, which can construct a uniform composite protective layer of alloy and inorganic zinc salts on the surface of the metallic zinc negative electrode, stabilize the solid/electrolyte interfacial film, and achieve effective inhibition of chemical corrosion and zinc dendrites.

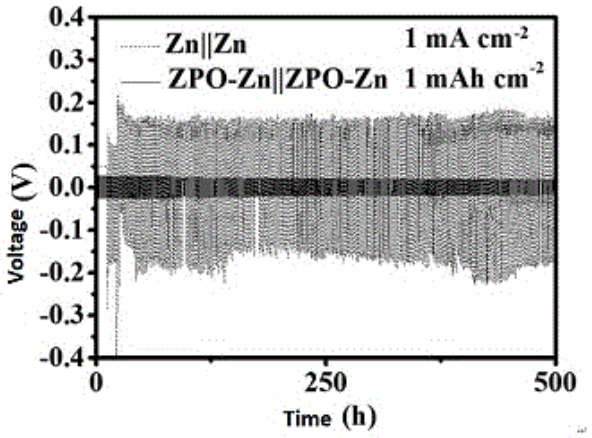

21: 2022/13951. 22: 2022/12/22. 43: 2023/09/05
51: A61B; A61L; G06K
71: TRISTEL PLC
72: BRAND, Thomas, JANSEN, Esther, SWINNEY, Paul
33: GB 31: 2011193.6 32: 2020-07-20
54: VALIDATION OF DECONTAMINATION PROCEDURES FOR A MEDICAL DEVICE
00: -
Disclosed is a method for validating a decontamination procedure performed on a medical device using a decontamination system. The method comprises capturing a video stream of a work area in which the decontamination procedure is carried out by a user, analysing the video stream to identify one or more decontamination events in the video stream that correspond with the decontamination procedure being correctly performed on the medical device, the decontamination event or at least one of the decontamination events comprising applying a decontaminating composition of the decontamination system to the medical device using a wipe, determining, based on the or each identified decontamination event, if the decontamination procedure has been completed, and upon determining that the decontamination procedure has

been completed, causing a corresponding indication to be provided to the user. The method may include alerting the user to potential errors and/or logging data to provide an audit trail.

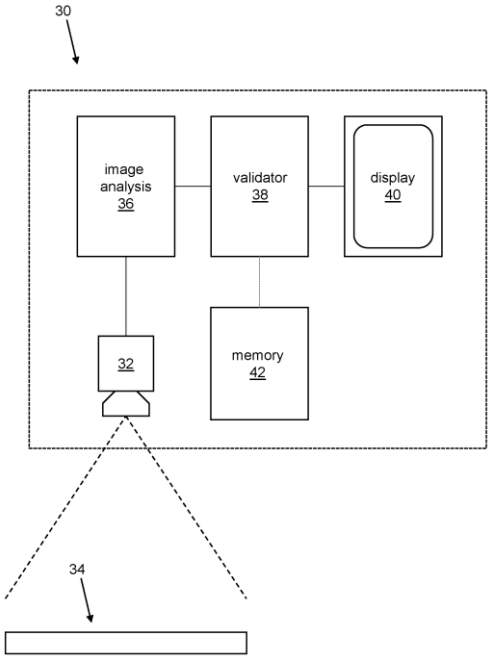

21: 2022/13959. 22: 2022/12/22. 43: 2023/09/05
51: A61B; A61L; G06K
71: TRISTEL PLC
72: BRAND, Thomas, JANSEN, Esther, SWINNEY, Paul
33: GB 31: 2011194.4 32: 2020-07-20
54: VALIDATION OF PROCEDURES IN A DECONTAMINATION PROCESS
00: -
Disclosed is a method for validating a decontamination procedure performed using a decontamination system that comprises a first product for use in a first step of the procedure, such as a pre-clean step, and a second product for use in a subsequent second step of the procedure, such as a disinfection step. The method comprises capturing a video stream of a work area in which the decontamination procedure is carried out by a user, analysing the video stream to identify when the first product is present in the work area and when the second product is present in the work area, determining, based on said identification, that the first and second products have been presented in the correct order in the decontamination procedure, and causing a corresponding indication to be provided to the user. The method may include alerting the user to potential errors and/or logging data to provide an audit trail.

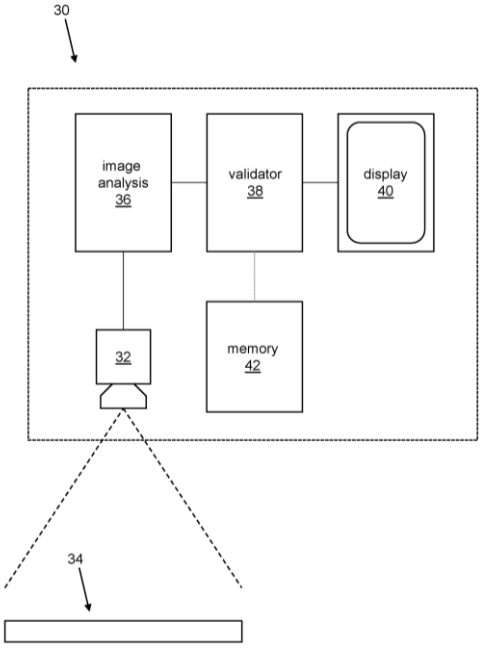

21: 2023/00131. 22: 2023/01/03. 43: 2023/09/07
51: A61K
71: ETHERNA IMMUNOTHERAPIES NV, VRIJE UNIVERSITEIT BRUSSEL
72: BEVERS, Sanne, DE KOKER, Stefaan, SCHIFFELERS, Raymond Michel, KOOIJMANS, Sander Alexander Antonius
33: EP 31: 20179435.1 32: 2020-06-11
33: EP 31: 21160384.0 32: 2021-03-03
54: LIPID NANOPARTICLES
00: -
The present invention relates to the field of lipid nanoparticles (LNP); more specifically comprising an ionizable lipid, a phospholipid, a sterol, a PEG lipid and one or more nucleic acids. The LNP's of the present invention are characterized in comprising less than about 1 mol% of a C14-PEG2000 lipid; as well as particular percentages of the other lipids. The present invention provides use of the LNP's for immunogenic delivery of nucleic acid molecules, specifically mRNA; thereby making them highly suitable for use in vaccines, such as for the treatment of cancer or infectious diseases. Finally, methods are provided for preparing such LNP's.

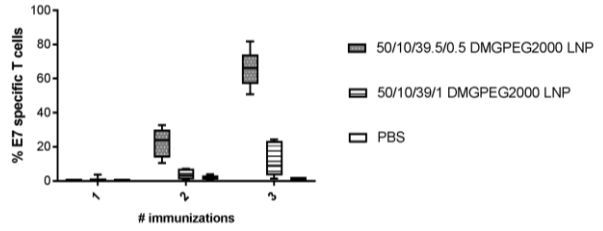

21: 2023/00147. 22: 2023/01/03. 43: 2023/09/14
51: A61B
71: EPISURF IP-MANAGEMENT AB
72: Jeanette Spångberg, Felicia Aldrin Bernhardt, Katarina Flodström
33: US 31: 16/893,079 32: 2020-06-04
33: SE 31: 2050651-5 32: 2020-06-04
54: CUSTOMIZATION OF IMPLANT
00: -
In accordance with one or more embodiments herein, a system 100 for customizing an implant is provided. The system 100 comprises a processor configured to: i) obtain one or more medical image stacks of a joint; ii) obtain a three-dimensional image representation of the joint based on at least one of said medical image stacks; iii) determine damage to the joint by analyzing said medical image stacks; iv) select an implant template from a predefined set of implant templates having predetermined types and sizes; v) generate a 3D model, in which the marked damage is visualized together with the selected implant template in a proposed position; vi) display the 3D model; vii) receive, from a user having a specific approval authorization, an approval for said selected implant template in said proposed position; and viii) determine the final shape and dimensions of a customized implant based on said selected implant template and said proposed position.

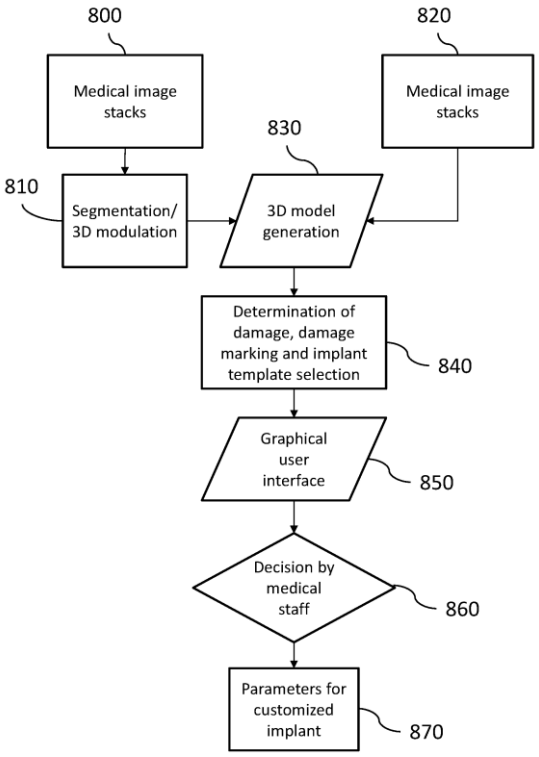

21: 2023/00164. 22: 2023/01/03. 43: 2023/08/11
51: A61K; A61P; C12N
71: New York University
72: MERUELO, Daniel, OPP, Silvana, SCAGLIONE, Antonella, PAMPENO, Christine, MARTINEZ, Alicia Hurtado, LIN, Ziyan
33: US 31: 63/034,791 32: 2020-06-04
54: MODIFIED ALPHAVIRUS FOR USE AS COVID-19 VACCINE
00: -
Modified alphaviruses encoding a SARS-CoV-2 spike protein or antigenic segment of the SARS-CoV-2 spike protein are provided. The modified alphaviruses include replicative defective Sindbis viruses. The modified viruses express or are administered with an immunomodulatory agent that is an agonist antibody or antigen binding fragment thereof, or a cytokine, or a combination thereof. Pharmaceutical compositions that include the modified alphaviruses and methods of using the modified alphaviruses and compositions that contain them are provided. The compositions are used to stimulate a therapeutic or protective effect against SARS-CoV-2 infection that includes humoral and cell mediated responses.

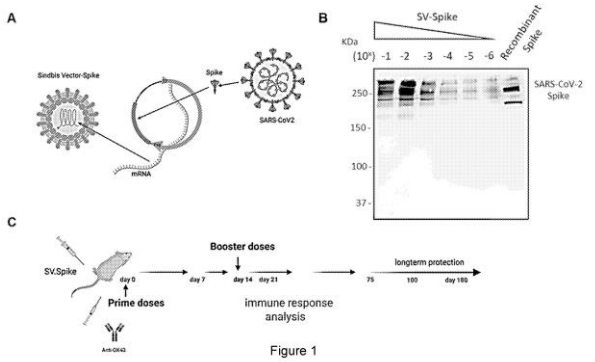

Figure 1

21: 2023/00203. 22: 2023/01/03. 43: 2023/07/27
51: G06F; H04Q
71: KIM, Byung Soo
72: KIM, Byung Soo
33: KR 31: 10-2020-0129696 32: 2020-10-07

54: A REMOTE CONTROL SYSTEM

00: -

The present invention relates to a remote control system and, more specifically, to a remote control system capable of executing or controlling operations or functions by using gestures. The remote control system operated by gestures, comprising: an input unit and an output unit; a storage unit for storing gesture information to be matched with an input gesture; and a control unit electrically connected to at least one of the input unit, the output unit, and the storage unit to recognize the gesture and control the system, wherein the control unit recognizes a gesture input by the input unit, matches the recognized gesture with the gesture information stored in the storage unit, executes an operation corresponding to the matched gesture information, and outputs to the output unit.

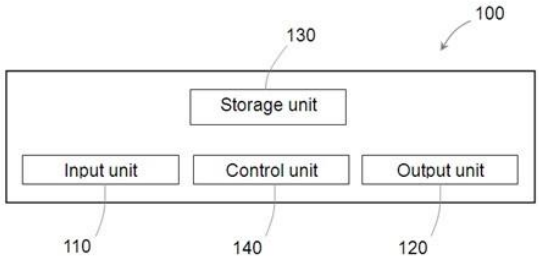

21: 2023/00206. 22: 2023/01/04. 43: 2023/08/11
51: F24S H02S
71: LOGIC IP AG
72: SCHWERTNER, Heiko

54: BASE TROUGH FOR A THERMAL MODULE, THERMAL MODULE COMPRISING SUCH BASE TROUGH, A SYSTEM FOR EXTRACTING THERMAL ENERGY AND THE USE OF SUCH BASE TROUGH FOR EXTRACTING THERMAL ENERGY FROM SUNLIGHT

00: -

The invention relates to a base trough (4) for a thermal module (1), thermal module (1) comprising such base trough (4), a system for extracting thermal energy and the use of such base trough (4) for extracting thermal energy from sunlight.

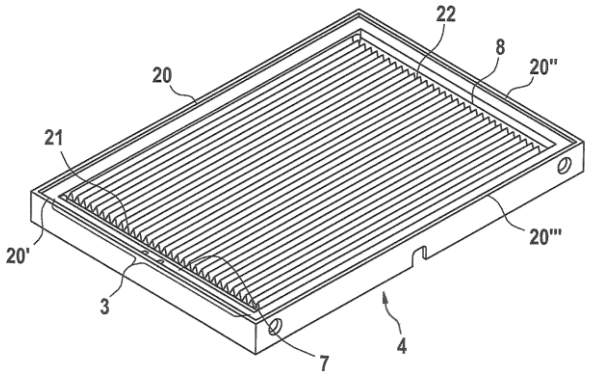

21: 2023/00300. 22: 2023/01/06. 43: 2023/08/11
51: H04W
71: TELEFONAKTIEBOLAGET LM ERICSSON (PUBL)
72: NAGALAPUR, Keerthi Kumar, LI, Jingya, ERIKSSON, Per-Erik

54: MIGRATION OF USER EQUIPMENT IN AN INTEGRATED ACCESS AND BACKHAUL NETWORK

00: -

There is provided mechanisms for migrating UEs from node to an R-IAB node. A method is performed by a D-IAB node of the S-IAB node and the R-IAB node. The method comprises obtaining a request for replacement of the S-IAB node. The method comprises providing, to the S-IAB node, an indication of replacement of the S-IAB node. The method comprises obtaining, from the S-IAB node, scheduling information for the UEs served by the S-IAB node. The method comprises forwarding, to the R-IAB node, the scheduling information. The method comprises initiating migration of at least a subset of the UEs from the S-IAB node to the R-IAB node by providing instructions, via the S-IAB node, to at least the subset of the UEs to switch from is served by the S-IAB node to is served by the R-IAB node.

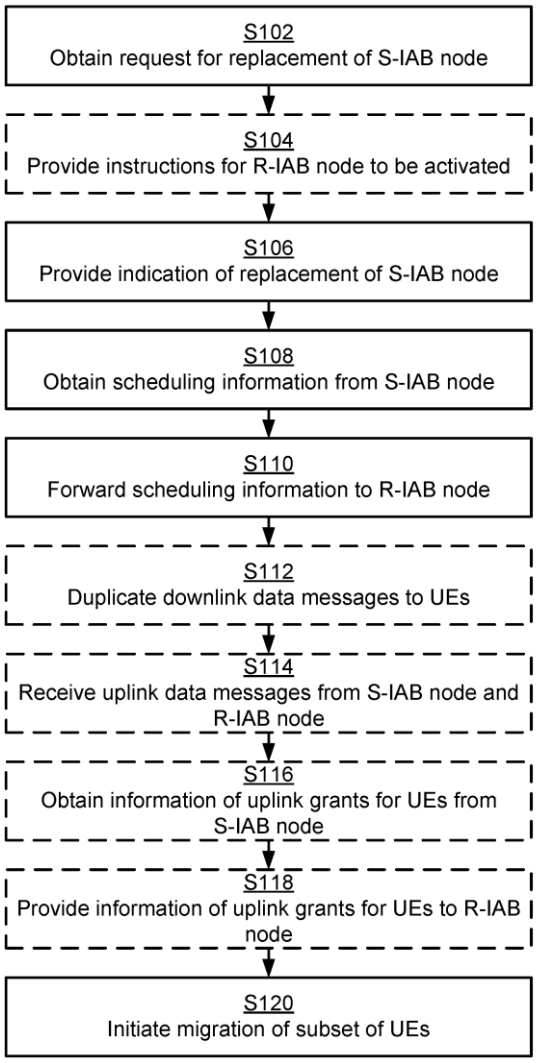

21: 2023/00302. 22: 2023/01/06. 43: 2023/08/11
51: F04D
71: Anhui Jinwan Pump Technology Co., Ltd
72: Hualong Ni, Jiaxuan Zhu, Lili Zhang, Ling Yu
33: CN 31: 202210640379.7 32: 2022-06-07
54: AN ANTI-CLOGGING URBAN UNDERGROUND DRAINAGE PUMP
00: -
An anti-clogging urban underground drainage pump related to the technical field of drainage pump sewerage, comprises a base plate and a tube body; the top side of the base plate is provided with a motor fixed by bolts, and the tube body is provided at the output end of the motor with a liquid inlet on one side; and fixed columns are evenly fixed at one side of the liquid inlet by spot welding, and a vibration mechanism is fixed at one end of fixed columns by spot welding. The invention is driven by the rotation of the impeller in the tube body through the rotation of the motor, to make the water flow with foreign matter from the liquid inlet into the baffle plate; the sealing curved plate attached to one side of the baffle plate starts to slide on the inner wall of the tube, to make the originally sealed liquid flow spout open; the supporting columns will push out the foreign matter clogged in the liquid flow spout, and the foreign matter on the baffle plate will be driven by the water flow into the drainage tank connected to the liquid flow spout on the one side, to avoid the foreign matter from contacting with the impeller under the water flow and causing the whole impeller to be damaged by the foreign matter winding.

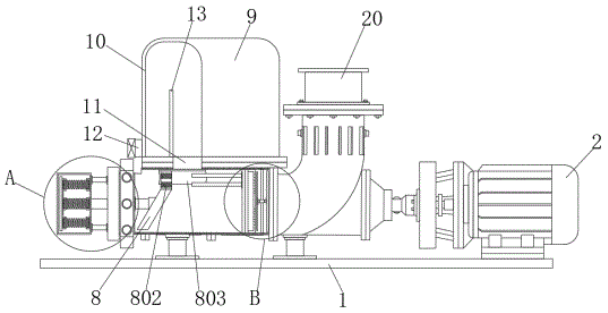

21: 2023/00349. 22: 2023/01/09. 43: 2023/08/11
51: A01G
71: CHEN, Shih-Hsiung, CHANG CHIEN, Shu-Hsia
72: CHEN, Shih-Hsiung, CHANG CHIEN, Shu-Hsia
33: TW 31: 111200297 32: 2022-01-10
54: AERIAL SPRAY RAINMAKING DEVICE
00: -
An aerial spray rainmaking device includes a container (10), a water storage assembly (20), a pump (30) and a spraying assembly (40). The water storage assembly (20) is disposed in the container (10) and includes a water tank (21) filled with water (B). The spraying assembly (40) includes a pressure tank (41) and multiple nozzles (42) communicating with the pressure tank (41). Two ends of the pump (30) separately communicate with the water tank (21) and the pressure tank (41). The water (B) is pressured by the pressure tank (41), and is nebulized and sprayed out of the container (10) by each nozzle (42). Therefore, widespread clouds in the high sky may be quickly condensed into water droplets to accomplish the function of rainmaking.

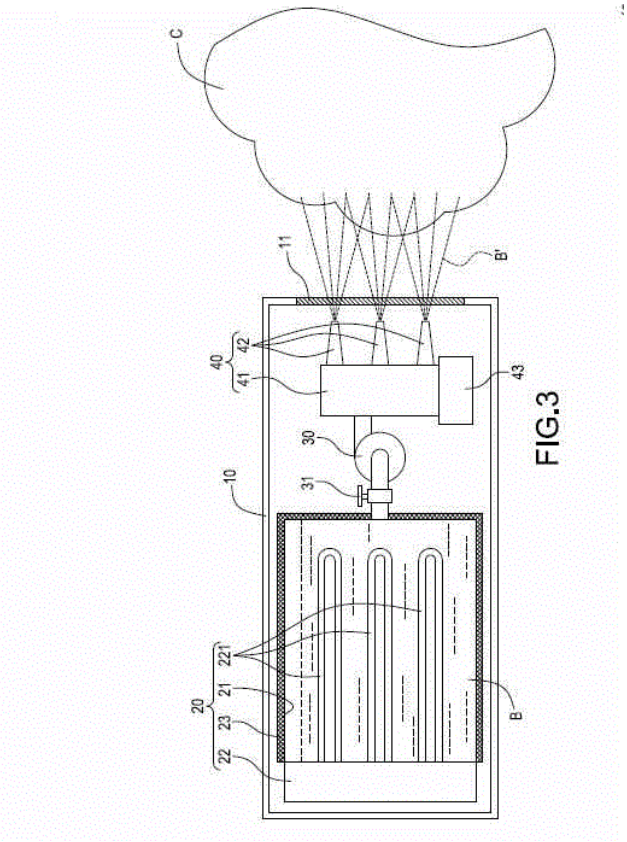

FIG.3

21: 2023/00350. 22: 2023/01/09. 43: 2023/08/11
51: A01G
71: CHEN, Shih-Hsiung, CHANG CHIEN, Shu-Hsia
72: CHEN, Shih-Hsiung, CHANG CHIEN, Shu-Hsia
33: TW 31: 111200296 32: 2022-01-10

54: FLUID DYNAMIC RAIN-MAKING APPARATUS

00: -

A fluid dynamic rain-making apparatus includes a first tubular member (10) and a thermal conductor (20). The first tubular member (10) includes a fluid channel having a first opening (12) and a second opening (13). An axial cross section of the fluid channel (11) decreases from the first opening (12) toward the second opening (13). The thermal conductor (20) includes a second tubular member (21) attached to the second opening (13) of the first tubular member (10) and heat sinks (22) circumferentially arranged on an outer surface thereof. A fluid (A) enters the fluid channel (11) from the first opening (11) and forms a cooled fluid (A1) through flowing through the fluid channel (11) for cooling the second tubular member (21), thus the heat sinks (22) are cooler than the external fluid (A). Accordingly, moist air is cooled to reach the dew point to form water drop for rainfall.

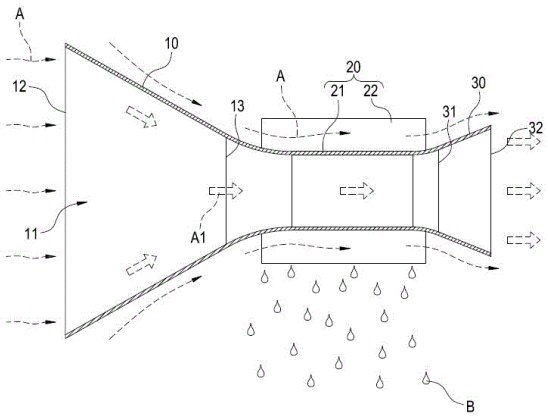

21: 2023/00351. 22: 2023/01/09. 43: 2023/08/11
51: F23D
71: CHEN, Shih-Hsiung, CHANG CHIEN, Shu-Hsia
72: CHEN, Shih-Hsiung, CHANG CHIEN, Shu-Hsia
33: TW 31: 111200298 32: 2022-01-10

54: MOBILE HYDROGEN-OXYGEN BURNER RAINMAKING DEVICE

00: -

A mobile hydrogen-oxygen burner rainmaking device includes a container (10), two liquid storage barrels (20), a combustion chamber (30) and an igniter (40). The container (10) has an accommodating space (11) and a gas pipe (12). The liquid storage barrel (20) is disposed in the accommodating space (11) and connected to a nozzle (21) and filled with liquid hydrogen (A) and liquid oxygen (B) separately. The combustion chamber (30) is disposed in the accommodating space (11) and has an opening (31). The igniter (40) is installed in the combustion chamber (30). Each nozzle (21) sprays the liquid hydrogen (A) and liquid oxygen (B) in a mist form into the combustion chamber (30) for mixing, and the igniter (40) ignites for combustion to form a high-temperature and high-pressure water vapor (C) to be discharged from the opening (31) along the gas pipe (12), so that the rainmaking device may be transported by a container (10) truck to an appropriate location for operation to achieve the desirable rainmaking effect.

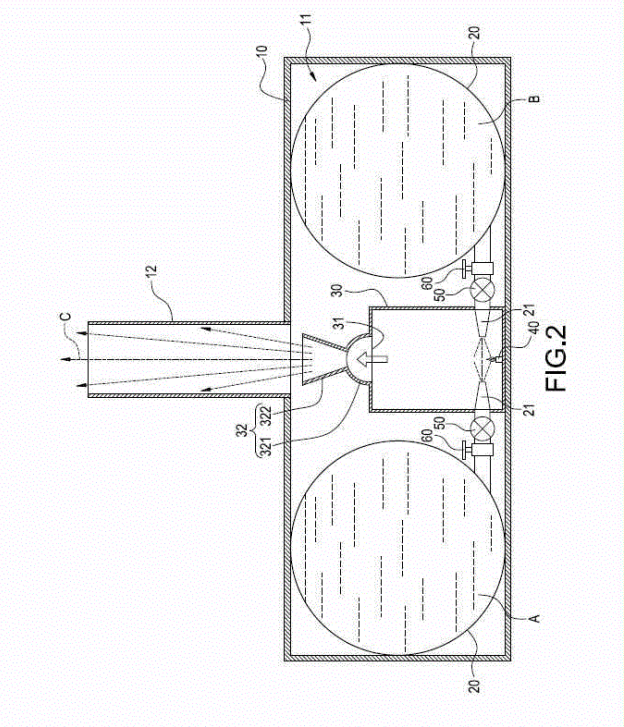

21: 2023/00436. 22: 2023/01/10. 43: 2023/09/27
51: B05C
71: Anhui Aiyalun New Material Technology Co., Ltd
72: Shen Feifei
33: CN 31: 202210938936.3 32: 2022-08-05
54: ANTI-STATIC COATING EQUIPMENT FOR PVC PLATES
00: -
The invention discloses an anti-static coating equipment for PVC plates and a coating method thereof, relates the field of PVC plates, comprising: a transport track; the shape of the transport track is circular; both sides of the transport track are equidistantly fixedly connected with several supporting columns; a PVC plate clamping mechanism; the PVC plate clamping mechanism is movably arranged at the bottom of the transport track; the PVC plate clamping mechanism is used for automatically assembling the PVC plate and adjusting the height of the PVC plate; an anti-static liquid pool; the anti-static liquid pool is arranged on the inboard of the supporting columns; the anti-static liquid pool is used for cooperating with the PVC plate clamping mechanism to adhere the anti-static liquid to the surface of the PVC plate; ultraviolet drying mechanisms. Through the provided PVC plate clamping mechanism, the anti-static liquid pool, and the ultraviolet drying mechanism, the PVC plate clamping mechanism can automatically clamp and put down the PVC plate, the ultraviolet drying mechanism can automatically replace the ultraviolet lamp without manual operation, which greatly improves the working efficiency.

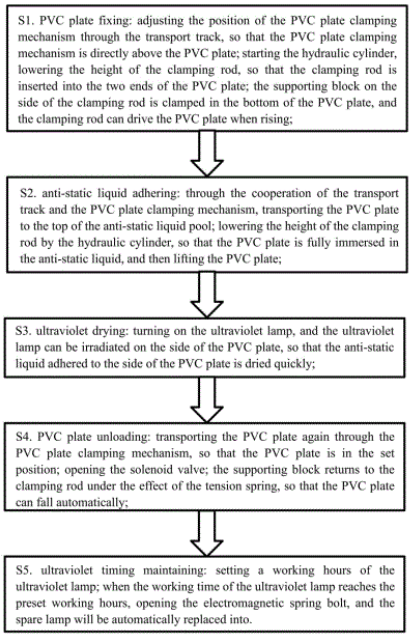

21: 2023/00469. 22: 2023/01/11. 43: 2023/08/11
51: B61G
71: MINER ENTERPRISES, INC.
72: SCHOEDL, ERICH A, WILT, DONALD E, KRIES, ANDY R
33: US 31: 17/665,058 32: 2022-02-04
54: RAILROAD FREIGHT CAR DRAFT GEAR FRICTION MODIFYING INSERT
00: -
A railroad freight car draft gear includes a friction clutch assembly with friction members arranged in operable combination with an actuator. Each friction member has an outer friction surface which slides along a mating friction surface. A spring assembly is provided for absorbing, dissipating, and returning energy imparted to the draft gear. Recesses are provided on the respective mating friction surfaces of the draft gear. A uniquely designed preformed friction modifying insert is pressed into each recess on the clutch assembly components. Each insert includes an elongated leg having projections extending radially outward from opposed surfaces on the insert leg. Each friction modifying insert is furthermore configured to include a convex inner contact surface to facilitate insertion and active

contact along with flared inner edges to improve fit between the insert and related draft gear components.

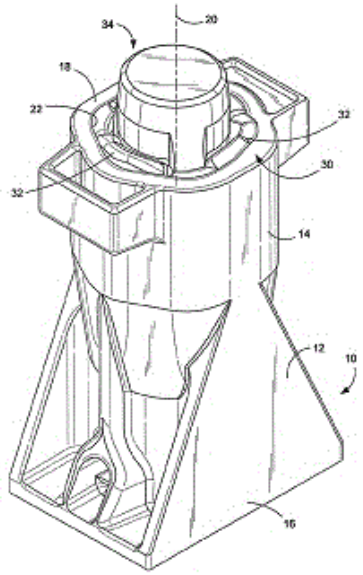

21: 2023/00494. 22: 2023/01/11. 43: 2023/08/11
51: A23K
71: CJ CHEILJEDANG CORPORATION
72: KWON, Min Kyung, LEE, In Sung, GWAK, Won Sik, YU, Jae Hun, HONG, Jin Tae, KANG, Ji-hun
33: KR 31: 10-2020-0078737 32: 2020-06-26
54: METHOD FOR PREPARING AMINO ACID GRANULE FROM FERMENTATION BROTH
00: -
The present application relates to a method for preparing amino acid granules from a fermented liquid and amino acid granules prepared thereby.

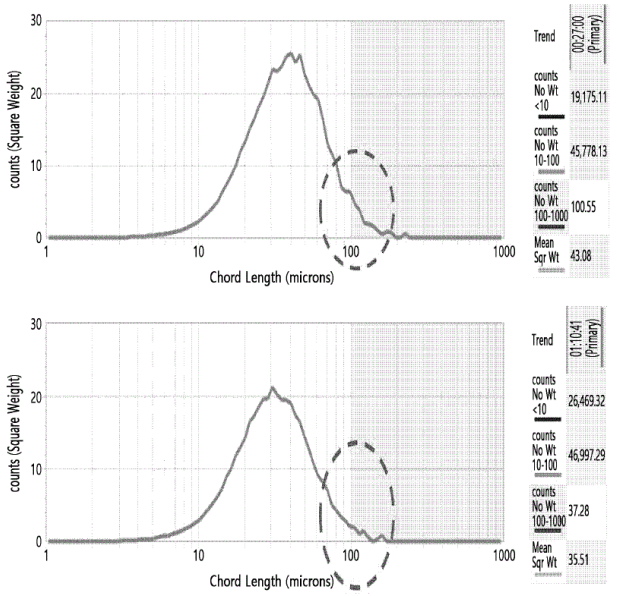

21: 2023/00661. 22: 2023/01/16. 43: 2023/09/27
51: B03B
71: Anhui University of Science and Technology
72: WANG Changji, LI Hanxu, ZHU Yuanyuan, WEN Tianlong, CHEN Fangwu, ZHANG Jiantang
33: CN 31: 2022109943960 32: 2022-08-18
54: COAL-WATER SLURRY CONCENTRATION DEVICE
00: -
The invention belongs to the technical field of coal-water slurry preparation equipment, in particular to a coal-water slurry concentration device, which comprises a grinding shell, a grinding mechanism connected in the grinding shell, a filtering unit connected below the grinding shell, a pulverized coal particle size distribution mechanism correspondingly arranged below the filtering unit, the pulverized coal particle size distribution mechanism is used for separating pulverized coal with different particle sizes, and an stirrer connected to the outlet of the pulverized coal particle size distribution mechanism, where the stirrer is used for stirring pulverized coal with different particle sizes into coal-water slurry; the grinding mechanism comprises a first bracket which is fixedly connected to the inner side wall of the grinding shell, and is connected with a step-by-step grinding unit, a first adjusting unit and two groups of second adjusting units, where the first adjusting unit is used for synchronously adjusting the grinding gap of the step-by-step grinding unit, and the two groups of second adjusting units are used for unifying the grinding gap of the step-by-step grinding unit.

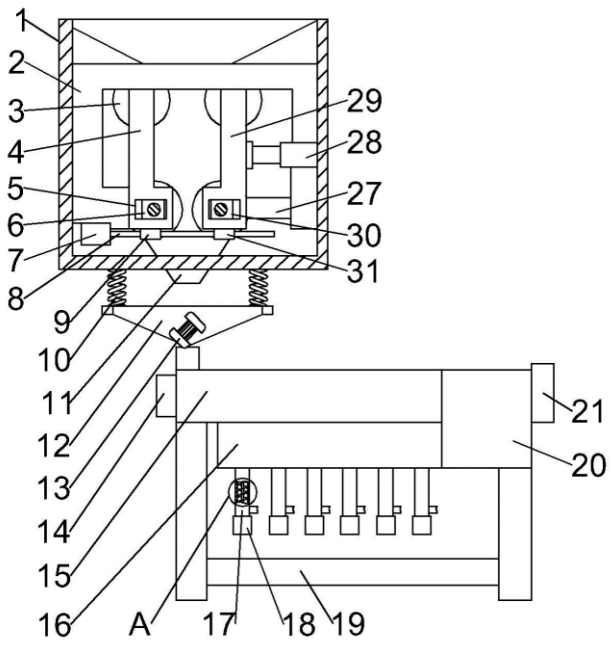

21: 2023/00663. 22: 2023/01/16. 43: 2023/09/14
51: G01N
71: Anhui Leiming Chemical Co., Ltd., China University of Mining and Technology
72: Luo Ning, Wang Yuchao, Zheng Ronghua, Cao Xiaolong, Sun Rui, Liang Hanliang, Zhai Cheng, Mou Gongyu, Li Zhiguo, Tian Yu
33: CN 31: CN202110792902.3 32: 2021-07-14
54: PLC-CONTROLLED EMULSIFICATION DEVICE FOR EMULSIFIED EXPLOSIVE TEST AND ITS WORKING METHOD
00: -

The present invention discloses a PLC-controlled emulsification device for emulsified explosive test and its working method, which comprises an emulsification barrel, a bracket, a kettle cover, a stirring mechanism, a digital display control mechanism, a feeding mechanism and a charging mechanism; the emulsification barrel is arranged at the top of the bracket, the kettle cover is arranged at the top of the emulsification barrel, the stirring mechanism is arranged inside the emulsification barrel, the feeding mechanism is arranged at the top of the kettle cover, the charging mechanism is arranged at the bottom of the emulsification barrel, and the digital display control mechanism is electrically connected with the stirring mechanism, the feeding mechanism and the charging mechanism; the outer wall of the emulsification barrel is provided with an insulating layer, an annular heating cavity is arranged in the emulsification barrel, a water vapor inlet is arranged at the top of the emulsification barrel, a water vapor outlet is arranged at the bottom of the emulsification barrel, a discharge port is arranged in the bottom surface of the emulsification barrel, an annular perspex mirror is arranged on the top surface of the kettle cover, and a plurality of feed ports are arranged at the top of the kettle cover, and the discharge port is communicated with the charging mechanism.

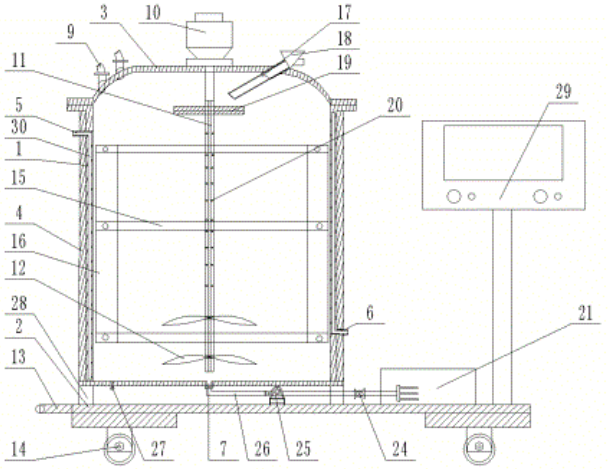

21: 2023/00676. 22: 2023/01/16. 43: 2023/09/21
51: G06Q
71: PLAYRCART LIMITED
72: DORMIEUX, Glen, MASON, Richard
33: US 31: 63/053,061 32: 2020-07-17
54: A MEDIA PLAYER
00: -

The present invention provides a media player configurable to provide the user with a seamless way of conducting transactions from within a window of the media player itself. All intermediate steps relating to the required transaction are carried out by calling up relevant modules/applications from within the application libraries from within an e-commerce platform. In preferred embodiments, the media player is configured to retrieve an encoded media file from a server or other content delivery network (CDN). The media player is further configured to display predefined overlays to the user during playback of the media file in response to identifying cues encoded into the media file by the content owner. The content owner can upload the media files to a server or other CDN via a dashboard/user interface. The cues can be encoded with a plurality

of fields to enable the desired functionality to be achieved.

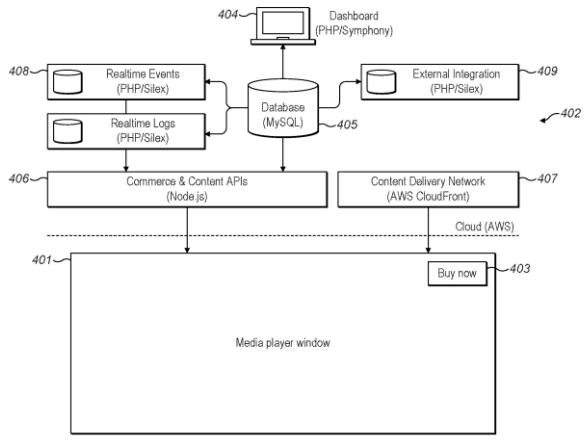

21: 2023/00779. 22: 2023/01/17. 43: 2023/08/21
51: A61K; C07D; A61P
71: WUHAN LL SCIENCE AND TECHNOLOGY DEVELOPMENT CO., LTD.
72: LI, Jinping, GUO, Xiaodan, ZHOU, Feng, LOU, Jun, LIU, Li, CHEN, Xiaoya, ZHANG, Yihan, CHEN, Yongkai, WANG, Chaodong
33: CN 31: 202010636308.0 32: 2020-07-03
33: CN 31: 202011460143.2 32: 2020-12-11
54: HETEROCYCLIC COMPOUND AND USE THEREOF
00: -
Disclosed is a heterocyclic compound as represented by formula (I), a tautomer thereof, or a pharmaceutically acceptable salt thereof. The compound has better inhibitory activity on TRPC5, has good metabolic stability in liver micro-particles, and has good clinical pharmacokinetic properties.

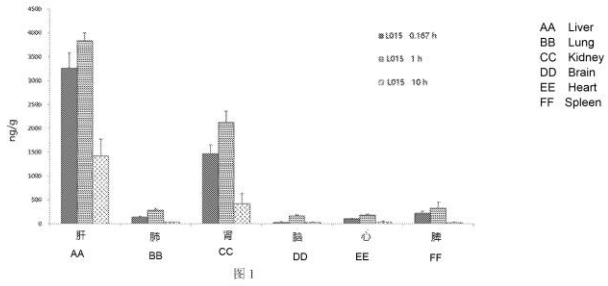

图 1

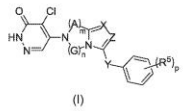
(I)

21: 2023/00838. 22: 2023/01/18. 43: 2023/08/21
51: A01N
71: Syngenta Crop Protection AG
72: MILN, Colin Douglas, WILLIARD, Elizabeth Gray
33: US 31: 63/059,283 32: 2020-07-31
54: FORMULATIONS
00: -
Technology relating to liquid pesticidal formulations, including flowable concentrates for seed treatment, comprising picarbutrazox and the preparation and use of said formulations.

21: 2023/00854. 22: 2023/01/19. 43: 2023/08/23
51: F25D; A47F
71: SCHOTT AG
72: DIEDERICHS, JOCHEN, RAFAJ, MARTIN, RAKOWSKA, MICHAELA, SCOTTO, PIERRE-FRANCOIS
33: EP 31: 22156262.2 32: 2022-02-11
54: INSULATING UNIT, DOOR, SIDEWALL AND CHILLER OR FREEZER DEVICE
00: -
An insulating unit for a chiller or a freezer device, comprising a transparent glass pane (2) and a transparent polymer pane (3), wherein said transparent glass pane (2) and said transparent polymer pane (3) are spaced apart from each other. Further, a door and/or sidewall and a chiller or freezer device are described.

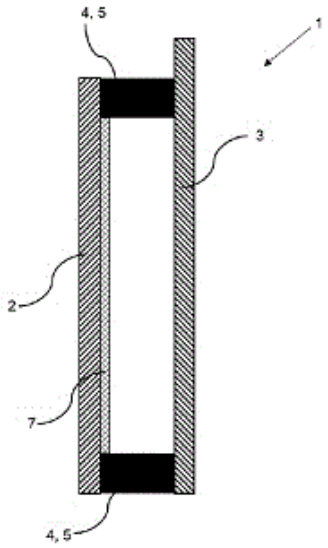

21: 2023/00963. 22: 2023/01/23. 43: 2023/09/11
51: A01G; A01M
71: THE JVR TRUST
72: Christiaan JANSEN VAN RENSBURG

54: ARTHROPOD AND MOLLUSC ARRANGEMENT

00: -

The invention discloses an arthropod and mollusc arrangement, which includes a band having an inner side adapted to be attached to a trunk of a tree; an outer side having a sticky surface and being adapted to trap crawling arthropod and molluscs trying to cross the band; and batting material attached to the inner side and being adapted to fill crevasses on the bark of the trunk of the tree in order to prevent arthropod and molluscs to crawl between the band and the trunk of the tree. The batting material may be adapted to fill the crevasses on the inner side as the band is tensioned when applied around the trunk of the tree. The crevasses may be closed by the batting material, the arthropod and molluscs are forced to cross over the outer side of the band and get trapped in the sticky surface.

2

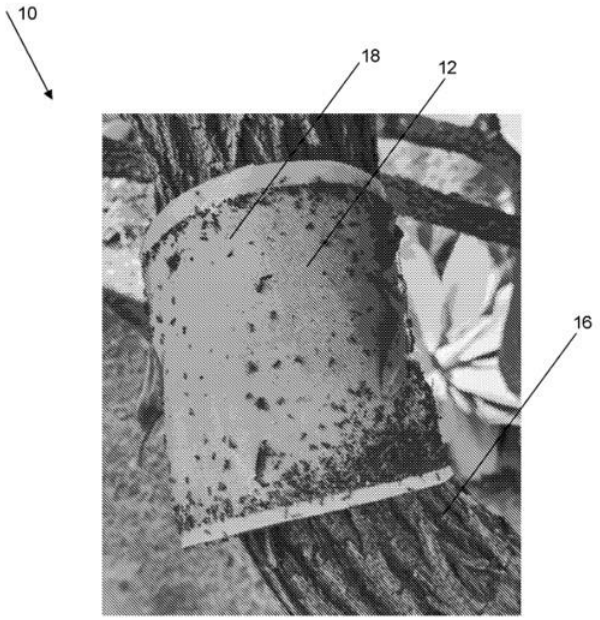

21: 2023/00988. 22: 2023/01/23. 43: 2023/08/21
51: A01G
71: Syngenta Crop Protection AG
72: SINCLAIR, Grant, BUCKLEY, Paul
33: NZ 31: 766513 32: 2020-07-28

54: PLANT INJECTION APPARATUS AND METHOD

00: -

Apparatus for injecting liquid into a plant comprising a variable volume dosing chamber (30) with a plunger (55) disposed within the chamber (30) and a chamber inlet (35) and outlet (40), the inlet (35) and outlet (40) in fluid communication with a common volume of the chamber (30). The apparatus also comprises a motor (45) and a processor (70). The motor (45) is configured to drive movement of the piston (55) plunger (55) causing a change in volume in the chamber (30). The processor (70) is configured to control voltage and power (100) to the motor (45) by creating a plurality of pulses of power (100) that provide energy to said motor (45); to identify a change in pressure of the liquid discharged from the outlet (40) during an injection operation by monitoring the motor (45) current or the number of revolutions of the motor (45); and to vary pulse force in response to the identified change in pressure to control the pressure of the liquid discharged from the outlet (40).

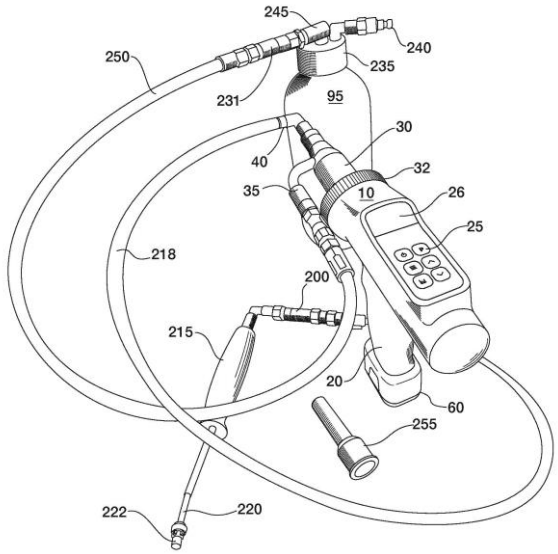

21: 2023/01009. 22: 2023/01/24. 43: 2023/09/08
51: A61K; A61P
71: ALKAHEST, INC.
72: BRAITHWAITE, Steven P., CZIRR, Eva, GALLAGER, Ian, HUBER, Nina, MINAMI, S. Sakura
33: US 31: 62/490,519 32: 2017-04-26
33: US 31: 62/584,571 32: 2017-11-10
33: US 31: 62/623,468 32: 2018-01-29
33: US 31: 62/641,194 32: 2018-03-09

54: DOSING REGIMEN FOR TREATMENT OF COGNITIVE AND MOTOR IMPAIRMENTS WITH BLOOD PLASMA AND BLOOD PLASMA PRODUCTS

00: -

Methods and compositions for treating and/or preventing aging-related conditions are described.

The compositions used in the methods include blood plasma and blood plasma fractions derived from blood plasma with efficacy in treating and/or preventing aging-related conditions such as cognitive disorders. The methods relate to a regimen of pulsed dosing of blood plasma or blood plasma fractions.

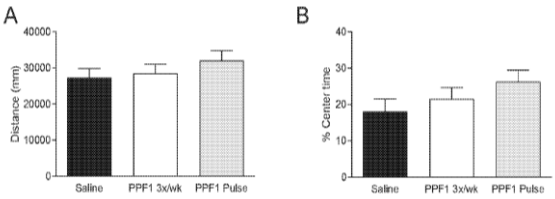

21: 2023/01083. 22: 2023/01/25. 43: 2023/08/21
51: A23N; G05B
71: FRITO-LAY NORTH AMERICA, INC.
72: EICHENLAUB, Sean, KOCI, Christopher, CHAN, Keith
33: US 31: 63/068,119 32: 2020-08-20
54: DEVICES, SYSTEMS, AND METHODS FOR REAL-TIME PEELING
00: -
Devices, systems, and methods for real-time peeling are disclosed. Peeling can include including evaluating and controlling one or more peelers to remove peel from organic materials. Evaluation can be performed by an evaluation system including a convolutional neural network to determine a peel value. Control can be performed by a machine learning model on the basis of the peel value. Control can include determination of real-time settings for peeler tool speed and/or gate position.

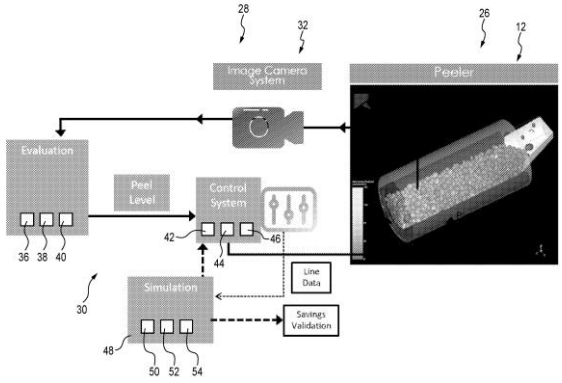

21: 2023/01098. 22: 2023/01/25. 43: 2023/08/21
51: G06F
71: ACTIAN CORPORATION
72: KLÄBE, Steffen, BAUMANN, Stephan
33: US 31: 63/046,464 32: 2020-06-30
33: US 31: 17/358,493 32: 2021-06-25
54: PATCHINDEX SYSTEM AND METHOD FOR UPDATABLE MATERIALIZATION OF APPROXIMATE CONSTRAINTS
00: -
Aspects described herein relate to maintaining a dataset with approximate constraints including determining, for a dataset, a constraint collection of tuples that satisfy a constraint and an exception collection of tuples that are an exception to the constraint, constructing, for the dataset, a sharded bitmap of bits, wherein each bit in the sharded bitmap indicates whether a tuple in the dataset is in the exception collection of tuples, wherein the sharded bitmap includes, for each shard of multiple shards, a bitmap of bits and a starting bit location index within the sharded bitmap of bits for the shard, and processing a query on the dataset including processing the constraint collection of tuples and the exception collection of tuples based on the sharded bitmap.

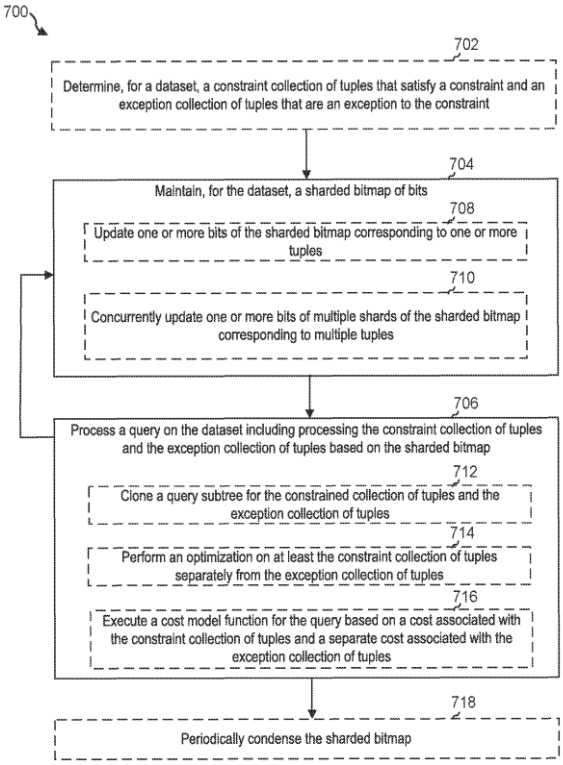

21: 2023/01155. 22: 2023/01/27. 43: 2023/08/21
51: F24S

71: Agenzia Nazionale per le Nuove Tecnologie L'energia e lo Sviluppo Economico Sostenibile (ENEA)
72: ESPOSITO, Salvatore, D'ANGELO, Antonio, DILETTO, Claudia, GRADITI, Giorgio, GUGLIELMO, Antonio
33: IT 31: 102020000018676 32: 2020-07-30
54: SPECTRALLY SELECTIVE SOLAR ABSORBER COATING
00: -
A spectrally selective solar absorber coating (2) for a receiver of a solar thermal or thermodynamic system and comprising in sequence: • - an infrared reflecting multilayer structure (21, 22); • - an absorbing multilayer cermet structure (23); and • - an anti-reflection multilayer structure (24). The infrared reflecting multilayer structure (21, 22) comprises: • (i) an infrared reflecting base layer (21) with barrier and adhesion layer functions, arranged in contact with a substrate (1) which is part of the receiver and consists of one or more transition metals selected from among Ti, V, Cr, Zr, Nb, Hf, Ta, Mo, W or of a nitride of one or more of said transition metals; and • (ii) a multifunction structure (22), which is placed on the infrared reflecting base layer (21) and comprising at least: • - multiple additional infrared reflecting layers (22a) with the function of increasing the infrared reflectance of the absorber coating (2), each of which consists of a metal selected from among Au, Ag, Cu, Al, Mo and W, and • - multiple stabilizing layers (22b) of the additional infrared reflecting layer (22a), each of which consists of ¦ a ceramic material; or ¦ a cermet material; or ¦ a material consisting of one or more transition metals or of a nitride of one or more transition metals. The multiple additional infrared reflecting layers (22a) and the multiple stabilizing layers (22b) are arranged so that one reflecting layer alternates with one or more stabilizing layers. One of the stabilizing layers (22b) is placed in contact with the absorbing multilayer cermet structure (23).

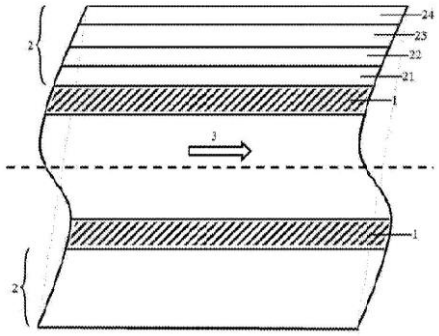

21: 2023/01217. 22: 2023/01/30. 43: 2023/08/21
51: A61K; A61P
71: MARINOMED BIOTECH AG
72: PRIESCHL-GRASSAUER, Eva, GRASSAUER, Andreas, MOROKUTTI-KURZ, Martina, GRAF, Philipp
33: EP 31: 20186334.7 32: 2020-07-16
54: ANTIVIRAL PHARMACEUTICAL COMPOSITION COMPRISING AT LEAST ONE SULPHATE POLYSACCHARIDE
00: -
The present invention relates to sulphated polysaccharides for use as an antiviral active ingredient in an antiviral effective amount in a pharmaceutical composition or medicament for the prophylactic or therapeutic intervention of a SARS-CoV-2 infection in a human individual or non-human animal.

21: 2023/01312. 22: 2023/02/01. 43: 2023/08/23
51: C12P C12N
71: EVONIK OPERATIONS GMBH
72: SCHNEIDER, Frank, JANKOWITSCH, Frank
33: EP 31: 20184966.8 32: 2020-07-09
54: METHOD FOR THE FERMENTATIVE PRODUCTION OF GUANIDINOACETIC ACID
00: -
The present invention relates to a microorganism transformed with L-arginine:glycine amidotransferase and reduced malate synthase and a glyoxylate aminotransferase to be capable of producing guanidinoacetic acid (GAA) and to a method for the fermentative production of GAA using such microorganism. The present invention also relates to a method for the fermentative production of creatine.

21: 2023/01314. 22: 2023/02/01. 43: 2023/08/23
51: C12P C12N

71: EVONIK OPERATIONS GMBH
72: SCHNEIDER, Frank, JANKOWITSCH, Frank
33: EP 31: 20184949.4 32: 2020-07-09
54: METHOD FOR THE FERMENTATIVE PRODUCTION OF GUANIDINOACETIC ACID
00: -
The present invention relates to a microorganism transformed with L-arginine:glycine amidotransferase and reduced malate synthase and a glyoxylate aminotransferase to be capable of producing guanidinoacetic acid (GAA) and to a method for the fermentative production of GAA using such microorganism. The present invention also relates to a method for the fermentative production of creatine.

21: 2023/01321. 22: 2023/02/01. 43: 2023/08/23
51: A01G; G01N
71: Vegetal Signals
72: COCHETEUX, Patrice, LE BOURDIEC, Fabian
33: FR 31: 2007386 32: 2020-07-15
33: FR 31: 2007387 32: 2020-07-15
33: FR 31: 2007385 32: 2020-07-15
54: SYSTEM FOR ELECTROPHYSIOLOGICAL ANALYSIS OF PLANTS
00: -
The invention relates to a system for electrophysiological analysis of plants, characterised in that it comprises: a plurality of acquisition systems, each acquisition system comprising: - a plurality of pairs of electrodes each comprising a first electrode and a second electrode each intended to be connected to the same plant in order to pick up first and second analogue electric potentials, a plurality of operational amplifiers arranged in order to measure the differences in potential between the first and second analogue electric potentials acquired by the first and second electrodes of said acquisition system and a plurality of analogue-to-digital converters designed to convert the differences in potential into digital signals, - a central data collection system comprising a memory and a source of electrical power, characterised in that each acquisition system is connected to the central system and comprises: a connecting unit designed to transmit the digital signals to the central system, a power unit designed to transmit electrical power obtained from the electrical energy source to the operational amplifiers and to the analogue-to-digital converters, each acquisition system being designed to galvanically isolate the operational amplifiers and the analogue-to-digital converters from the power unit and the connecting unit.

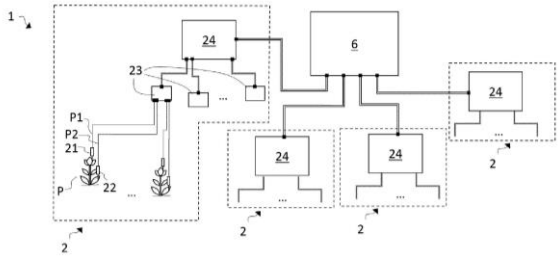

21: 2023/01326. 22: 2023/02/01. 43: 2023/08/23
51: G01N
71: UNIVERSITY OF PRETORIA
72: OZOEMENA, Kenneth Ikechukwu, MATHEBULA, Nsovo Samuel
33: ZA 31: 2020/04130 32: 2020-07-07
54: CARBON-ENCAPSULATED MYCOLIC ACID ANTIGENS AS SIMPLE AND LOW-COST ELECTROCHEMICAL IMMUNOSENSORS FOR ACTIVE TUBERCULOSIS
00: -
The invention is directed at a method of encapsulating mycolic acid antigen in carbon, wherein carbon and mycolic acid antigen are dissolved in solution, the solution is ultrasonicated, and dried. The invention is also directed to a carbon-encapsulated mycolic acid antigen produced by this method for use as an electrochemical immunosensor for detection of tuberculosis by detecting presence of mycolic acid antibodies in a serum sample.

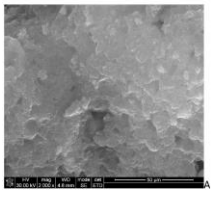

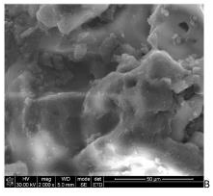

21: 2023/01348. 22: 2023/02/02. 43: 2023/08/23
51: E02F

71: MINETEC S.A.
72: VERA TORRES, BERNARDO LUIS, DE LA FUENTE LÓPEZ, FERNANDO ESTEBAN, FLORES, ANTONIO
33: CL 31: 202200312 32: 2022-02-07
54: DAMPING ELEMENT FOR EXCAVATOR BUCKETS
00: -
Damping element for excavator shovel buckets that improves the protection of its components.

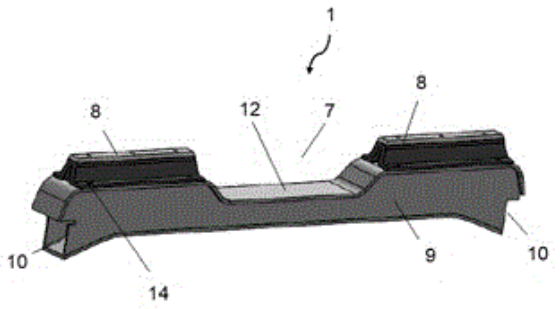

21: 2023/01349. 22: 2023/02/02. 43: 2023/08/24
51: F02F
71: MINETEC S.A.
72: VERA TORRES, BERNARDO LUIS, DE LA FUENTE LÓPEZ, FERNANDO ESTEBAN, FLORES, ANTONIO
33: CL 31: 202200313 32: 2022-02-07
54: MODIFIED BUCKET
00: -
Modified bucket that combines elements of buckets from different models of excavator shovels.

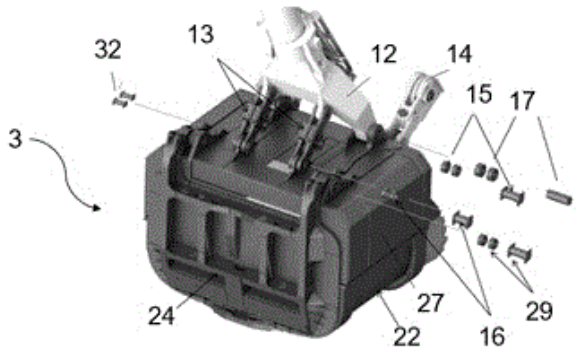

21: 2023/01359. 22: 2023/02/02. 43: 2023/08/23
51: H04W
71: TELEFONAKTIEBOLAGET LM ERICSSON (PUBL)
72: RAMACHANDRA, Pradeepa, CENTONZA, Angelo, BELLESCHI, Marco, PARICHEHREHTEROUJENI, Ali
33: US 31: 63/068,590 32: 2020-08-21
54: UE, NETWORKS NODES, AND METHODS PERFORMED THEREBY, FOR HANDLING RACH-REPORTS
00: -
A method for providing one or more indications related to a random access procedure by a first node (101) to a second cell (122, 124), when served by a first cell (121). The second cell (122, 124) is a secondary cell. The first node (111) registers (1401) a first identifier of the second cell (122, 124) and one or more first indications indicating at least one of: i) a second identifier of the first cell (121), ii) a third identifier of a primary secondary cell (123), iii) a fourth identifier of a first network node (111) owning the first cell (121), iv) a fifth identifier of a second network node (112) owning the primary secondary cell (123), and v) an indicator of a cell group the second cell (122, 124) belongs to. The first node (111) also provides (1402) one or more second indications based on the registered identifier and indications.

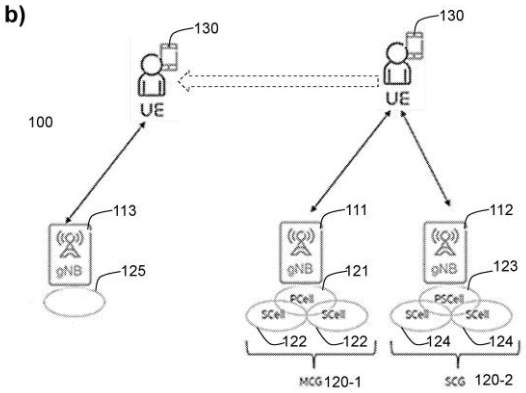

21: 2023/01362. 22: 2023/02/02. 43: 2023/08/23
51: H04L
71: TELEFONAKTIEBOLAGET LM ERICSSON (PUBL)
72: KITTICHOKECHAI, Kittipong, FALAHATI, Sorour, SINGH, Bikramjit, FRÖBERG OLSSON, Jonas, BLANKENSHIP, Yufei, ZOU, Zhenhua, ANDERSSON, Mattias
33: US 31: 63/058,135 32: 2020-07-29
54: SYSTEMS AND METHODS FOR PUCCH REPETITION
00: -
Systems and methods for Physical Uplink Control Channel (PUCCH) repetition are disclosed. In some embodiments, a method performed by a wireless

device for transmitting on a PUCCH includes: receiving a configuration indicating PUCCH repetition; and transmitting repeated PUCCH transmissions based on the configuration. Some embodiments provide methods for flexible configuration and indication of PUCCH repetition, including the number of repetitions, based on Uplink Control Information (UCI) type and/or priority of the UCI. Some embodiments can be applied to both slot-based PUCCH and sub-slot based PUCCH, and also short and long PUCCH formats.

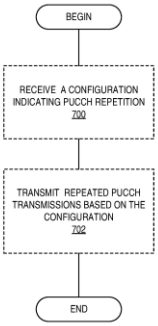

21: 2023/01369. 22: 2023/02/02. 43: 2023/08/23
51: A61K; A61P; C07H
71: AstraZeneca AB
72: RYDÉN-BERGSTEN, Tina, REKIC, Dinko, NILSSON, Catarina, KNÖCHEL, Jane
33: US 31: 63/079,947 32: 2020-09-17
54: PCSK9 INHIBITORS AND METHODS OF TREATMENT USING SAME
00: -
The present disclosure provides dosages and methods for treating a disease associated with proprotein convertase subtilisin/kexin type 9 (PCSK9). The present disclosure also provides unit dosages, dosing regimens and methods for treating a disease associated with PCSK9.

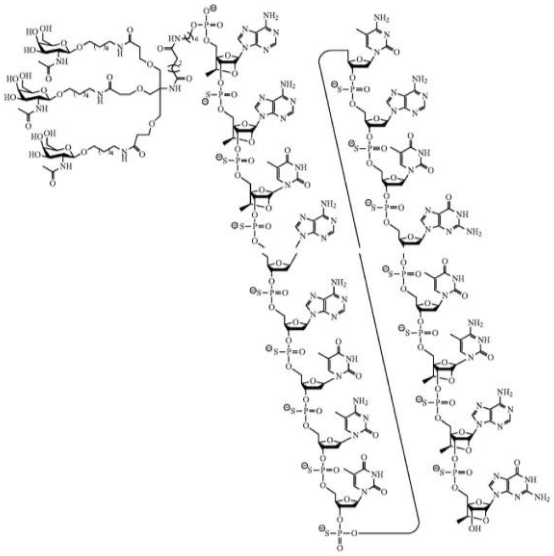

21: 2023/01407. 22: 2023/02/03. 43: 2023/08/23
51: A23N; B25J; B26D
71: CRESCENZO, Biagio
72: CRESCENZO, Biagio
33: IT 31: 102022000001979 32: 2022-02-04
54: FRUIT CLAMPING TOOL, IN PARTICULAR FOR CLAMPING PEACHES, MACHINE AND METHOD FOR PITTING FRUIT WITH SUCH A TOOL
00: -
A clamping tool (1) for clamping a fruit (F), in particular a peach, in a given position in a processing station of a pitting machine (M) has a tubular shape, extends around a given axis (A) and is provided with a first opening (2) configured to allow the clamping tool to be arranged over and around the fruit (F); a second opening (3) arranged on the opposite side relative to the first opening (2) to allow for the insertion of cutting tools inside the clamping tool (1) in a direction parallel to said axis (A); two through channels (5), which are parallel to said axis (A) and extend from the first to the second opening (2; 3); and two walls (6) facing each other, separated by the channels (5) and converging towards the axis between the first and the second opening (2, 3).

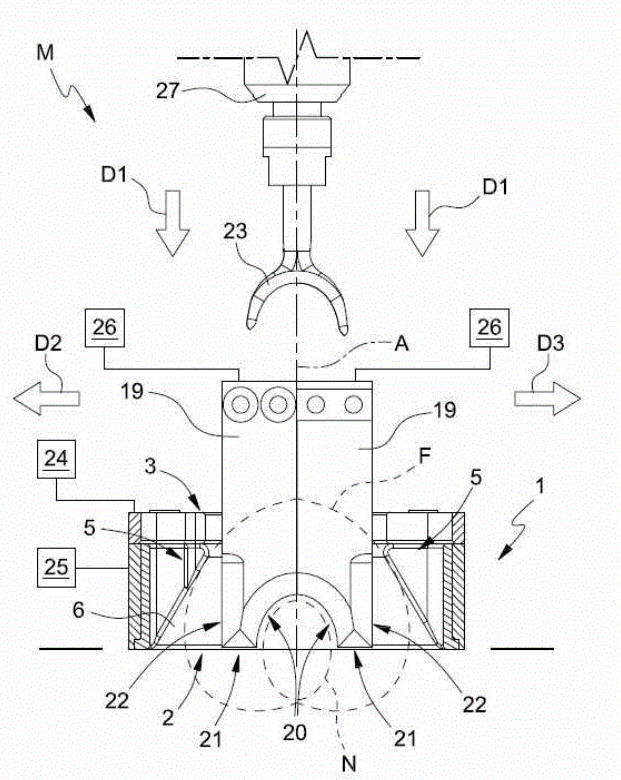

21: 2023/01414. 22: 2023/02/03. 43: 2023/08/23
51: F41A; F41C
71: CEREBUS CYBER FORENSICS (PTY) LTD.
72: PARKES, TRISTAN GARETH
33: ZA 31: 2021/08545 32: 2021-11-03
54: A FIREARM MONITORING DEVICE
00: -
A firearm monitoring device includes a housing including a connector for removably connecting the device to a firearm to be monitored. Contained in the housing are a memory, a battery, a location module, an accelerometer, a gyroscope to determine a tilt, angle, and orientation of the device to thereby determine shot angles of any shots fired from the firearm, a communications module and a camera. A processor controls the operation of the device determining that the firearm has been removed from a holster, and in response thereto activating the camera to start recording images and storing image data in the memory. Data from the accelerometer indicating that the firearm has been discharged is stored in the memory and in response to the firearm being discharged, the processor controls the transmission of location data; image data and accelerometer data via the communications module to a remote server.

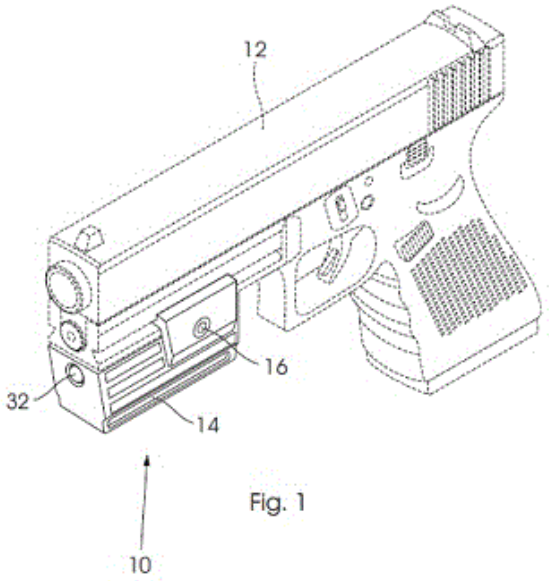

Fig. 1

21: 2023/01444. 22: 2023/02/03. 43: 2023/08/23
51: G06N
71: Suez International
72: MOSCOVIZ, Roman
33: FR 31: 2007444 32: 2020-07-16
54: GENERATING NOISY COPIES OF TRAINING DATA IN A METHOD FOR DETECTING ANOMALIES
00: -
Computer-implemented method (1) for detecting anomalies in a dataset, implementing an unsupervised machine learning module, comprising a step of generating (10-10'') a plurality of noisy copies of all or some of the data of the training dataset, each noisy copy being obtained based on at least one noise generation parameter, for each noisy copy, a step of training (12-12'') said machine learning module based on said associated noisy training dataset, and a step of determining (14, 14') the noisy training dataset exhibiting a maximum detection performance.

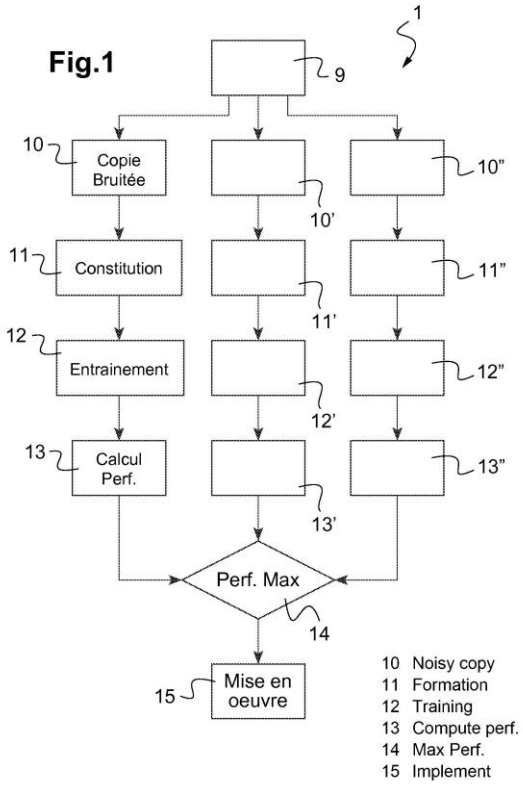

21: 2023/01504. 22: 2023/02/06. 43: 2023/09/04
51: A01N; C09D; C12P
71: THE STATE OF ISRAEL, MINISTRY OF AGRICULTURE & RURAL DEVELOPMENT, AGRICULTURAL RESEARCH ORGANIZATION (ARO) (VOLCANI INSTITUTE)
72: ALKAN, Noam, POVERENOV, Elena, SAIDI, Lilach, MAURER, Dalia, FEYGENBERG, Oleg
33: US 31: 63/061,346 32: 2020-08-05
54: EDIBLE COATINGS FOR MAINTAINING FRUIT QUALITY
00: -
The present invention is related to liquid compositions, kits and to methods for using thereof such as for reducing pathogen load or for prolonging shelf-life of the edible matter.

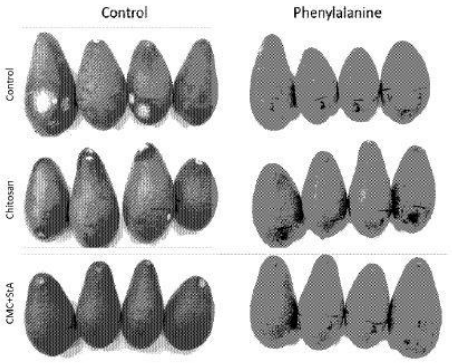

21: 2023/01576. 22: 2023/02/08. 43: 2023/08/24
51: H01M
71: EVONIK OPERATIONS GMBH
72: HUANG, Yuan-Chang, ESKEN, Daniel, KINZLINGER, Uwe, SCHMIDT, Gerold, SCHARF, Guido, LEE, Chih-Hung, WU, Hung-Chun, LIN, Yu-Han, LIN, Ting-Fang
33: EP 31: 20185989.9 32: 2020-07-15
54: NANO-COMPOSITE POLYMER SEPARATOR WITH ENHANCED SAFETY PERFORMANCE AND PREPARATION METHOD THEREOF
00: -
A method for manufacturing a porous membrane suitable for use as a separator of a lithium ion battery, comprising the following steps: 1) compounding a polymer and hydrophobic filler by dry mixing; 2) extruding the compounded mixture to obtain a cast film and 3) stretching the cast film to obtain the porous membrane. A porous membrane suitable for use as a separator of a lithium ion battery, a separator for a lithium ion battery, a lithium ion battery, and a device are also provided.

21: 2023/01681. 22: 2023/02/10. 43: 2023/08/28
51: G01B
71: NATIONAL METROLOGY INSTITUTE OF SOUTH AFRICA
72: KRUGER, Oelof Abraham
33: ZA 31: 2020/04445 32: 2020-07-20
54: PROBING CONFIGURATION
00: -
This invention relates to a probe assembly (100), a probing configuration (10), a coordinate measuring machine (CMM) (12) including the probing configuration (10) and a method of determining a coordinate of a point on an object using the CMM. The probe assembly (100) is characterized in that it includes a reference body (102) having an outer

reference surface (104) in the form of a spherical dome defining a centre point (106). The probe assembly (100) also includes a probe (14) having a tip which defines a probe centre (16), the probe being connected to the reference body and arranged such that the centre point and probe centre coincide. Due to this configuration, a measurement datum for taking of at least one measurement associated with a position of the probe tip is defined by the spherical dome when a reading axis of a measurement instrument is normally aligned to the spherical dome such that the reading axis intersects the probe centre thus facilitating reduction or elimination of Abbe errors.

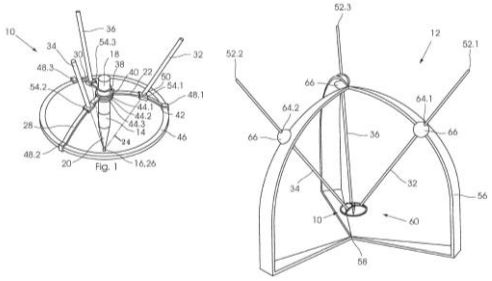

21: 2023/01685. 22: 2023/02/10. 43: 2023/08/28
51: B01J
71: Casale SA
72: PANZERI, Nicola
33: EP(CH) 31: 20190846.4 32: 2020-08-13
54: WALL ASSEMBLY FOR CATALYTIC BEDS OF SYNTHESIS REACTORS
00: -
Gas-permeable assembly (10) for retaining a fine granular catalyst (1) comprising: a first wall (2) arranged to face the catalyst, a second wall spaced from the first wall (4) and arranged to be opposed to the catalyst, a catalyst-retaining core (3) interposed between said first wall and second wall.

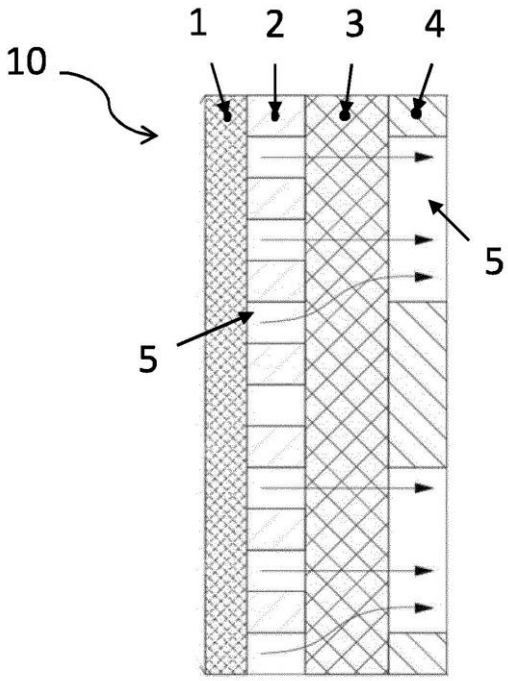

21: 2023/01687. 22: 2023/02/10. 43: 2023/08/28
51: B65D
71: Oc Bev Ltd
72: MENTASTI GRANELLI, Kerry
54: LID FOR CONTAINERS OF SUBSTANCES, AND CONTAINER OF SUBSTANCES COMPRISING SAID LID
00: -
Lid for a metal container (11) able to contain a substance, comprising: - a closing cap (12) defined by at least one incision or pre-cut line (13), able to allow the closing cap to be lifted and at least partly torn, - an opening lever (14) disposed astride the incision line (13) and comprising a front fulcrum end (15) and an intermediate region (16) provided with a flexible tongue (17) attached to the closing cap (12), - a mechanical element (18) located in proximity to the incision line (13), configured to mechanically attach the flexible tongue (17) to the closing cap (12) and configured to cooperate with said flexible tongue (17); - the incision line (13) having at the front, in the zone where the closing cap (12) starts to be lifted and torn, a portion (19) protruding outward, toward the front fulcrum end (15) of the opening lever (14), - the protruding portion (19) having, on both sides, segments (20) of the incision line (13) which move away from said mechanical element (18) as far as

respective deformation zones (21), caused by compression of the incision line (13).

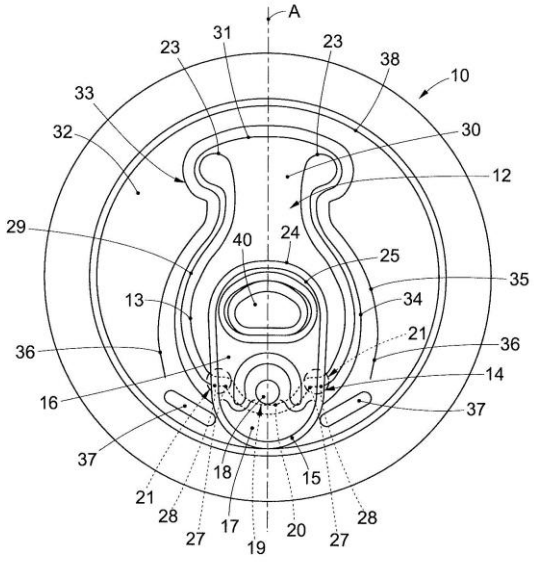

21: 2023/01691. 22: 2023/02/10. 43: 2023/08/28
51: A01D; A23N
71: Aussie Wine Group Holdings Pty Ltd
72: VILLIS, Malcolm
33: AU 31: 2020904882 32: 2020-08-03
54: SEPARATOR FOR A GRAPE COLLECTION UNIT
00: -
Described is a separation apparatus for a harvester, for separating berries from other plant matter from harvested plant material, the apparatus comprising a conveyor system that defines a first separation system, a second separation system located at least partially above the first separation system comprising an array of rotatable rollers to convey harvested plant material in an upstream to downstream direction, the rollers spaced apart to provide a plurality of openings permitting the transit of separated berries through the berries while preventing the transit of other plant matter, a third separation system in the form of a de-stemming unit downstream of the second separation system, a plant matter distribution system, for distributing plant matter away from the collection apparatus, wherein berries pass through any one or more of the first, second and third separation systems for collection in the collection unit.

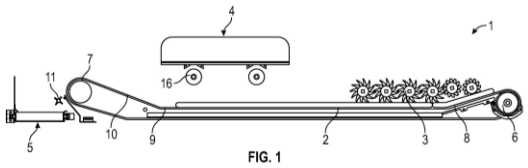

FIG. 1

21: 2023/01697. 22: 2023/02/10. 43: 2023/08/28
51: A61B; G01N; G02B
71: CLINX SCIENCE INSTRUMENTS CO., LTD
72: CAI, RONGWEI, CHEN, XIONGQUN, WANG, HUIMING, CHU, DEBAO, GAO, JIE
33: CN 31: 202010683375.8 32: 2020-07-14
54: ROTARY IMAGING SYSTEM, PLANT IMAGER, ANIMAL IMAGER, AND ANIMAL AND PLANT IMAGER
00: -
A rotary imaging system, a plant imager, an animal imager, and an animal and plant imager, relating to the technical field of living sample imaging. The plant imager, the animal imager, and the animal and plant imager all comprise a rotary imaging system (100). The rotary imaging system (100) comprises a sample table unit (20), a camera unit (10), and a rotation unit (30); the sample table unit (20) is used for carrying a sample (200); the camera unit (10) is used for imaging the sample (200); the rotation unit (30) comprises an accommodating cavity (3112) accommodating the sample table unit (20), and the rotation unit (30) is used for driving the camera unit (10) to rotate with respect to the sample table unit (20) and controlling the camera unit (10) to be stationary with respect to the sample table unit (20). By means of the rotary imaging system (100), powerful data support is provided for the subsequent image reconstruction and image fusion, and the number of cameras required for imaging different portions of a sample is also reduced.

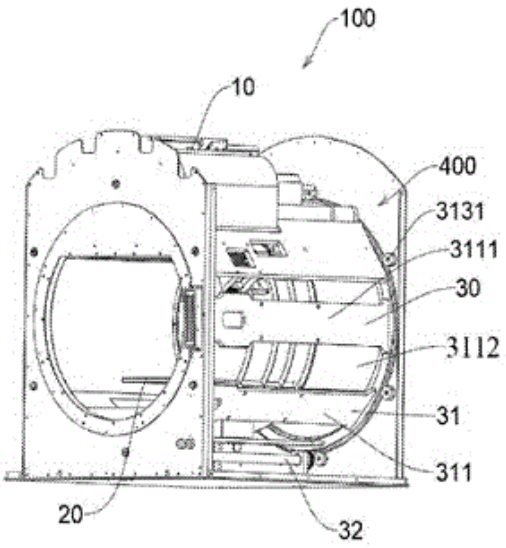

21: 2023/01730. 22: 2023/02/13. 43: 2023/08/28
51: B60R; B62J; B65D
71: SNYMAN, George Frederik
72: SNYMAN, George Frederik
33: ZA 31: 2022/02332 32: 2022-02-24
54: Accessory for a motorcycle
00: -
The invention is in respect of an accessory for a motorcycle storage device such as a top box or panier. The accessory includes mounting means whereby the accessory is dismountably mountable to the storage device and at least one storage receptacle connected to the mounting means. In one embodiment, the accessory has a first operative condition in which it can be used as a cover for the storage device and a second operative condition in which, when removed from the storage device, it can be used as a carrier for transporting goods.



21: 2023/01863. 22: 2023/02/15. 43: 2023/08/30
51: F28D; F28F
71: LUMMUS NOVOLEN TECHNOLOGY, GMBH
72: RUHL, Oliver Marco, SCHWAB, Jochen Axel, BRIGNONE, Marco, FIEDLER, Frank
33: EP 31: 20192268.9 32: 2020-08-21
54: SYSTEM AND METHODS OF A VERTICAL ROD BAFFLE HEAT EXCHANGER
00: -
A vertical rod baffle heat exchanger may be used for heat removal, condensation operations, electricity generation, petrochemical plants, waste heat recovery, and other industrial applications. The vertical rod baffle heat exchanger may include a shell; a tube-sheet; a tube bundle having a plurality of heat exchange tubes extending in an axial direction; six or more longitudinal partition plates; and a plurality of rod baffle rings provided along an axial length of the plurality of heat exchange tubes. At least one longitudinal partition plate may be a notched longitudinal partition plate. The plurality of rod baffle rings may have lateral rod baffles and longitudinal rod baffles. The lateral rod baffles and the longitudinal rod baffles may pass through gaps between every two adjacent tubes of plurality of heat exchange tubes. The lateral rod baffles may pass through openings in the notched longitudinal partition plate.

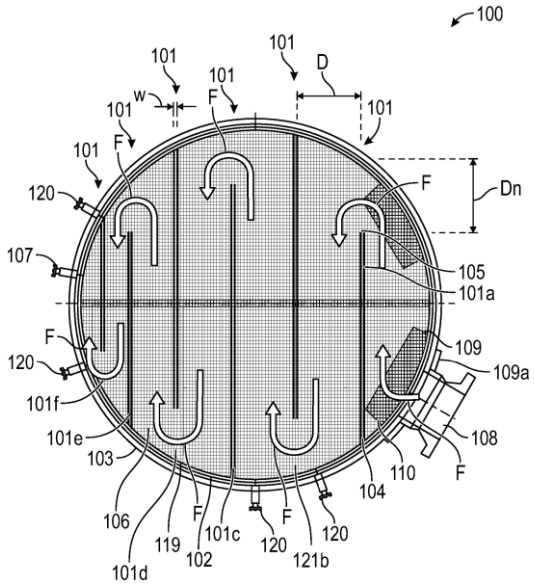

21: 2023/01906. 22: 2023/02/16. 43: 2023/10/02
51: B05B; F16B; F16L
71: UNIVERSITY OF SOUTH AFRICA
72: STOFFBERG, GERRIT HENDRIK
33: ZA 31: 2022/02132 32: 2022-02-18
54: A DEVICE FOR ADJUSTING AND ORIENTATING A SPRINKLER OUTLET
00: -
The invention relates to a device 10 for adjusting and orientating a sprinkler outlet. The device 10 includes a spherical body 12 with an inlet 12a and an outlet 12b. The inlet 12a is arranged in fluid flow communication with the outlet of the sprinkler and with the outlet 12b. A diameter of the inlet 12a of the spherical body 12 is greater than a diameter of the outlet 12b. A support member 14 supports the spherical body 12 relative to a ground surface 16, wherein the support member 14 is arranged in fluid flow communication with the outlet of the sprinkler and the inlet 12a. A receiving member 18 is configured to receive and engage a portion of the spherical body 12 and allows the spherical body 12, and outlet 12a, to be displaced to a desired position relative to the support member 14.

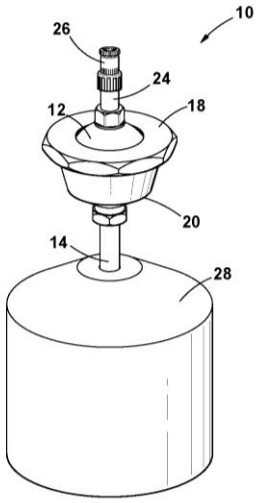

21: 2023/01932. 22: 2023/02/16. 43: 2023/08/28
51: B65D; E05G; G07D
71: MAGNETO IP HOLDINGS (PTY) LTD
72: ROBSON, Michael Donald
33: WO 31: PCT/IB2021/057581 32: 2021-08-18
33: ZA 31: 2020/05098 32: 2020-08-18
54: BANK NOTE STORAGE CONTAINER AND BANK NOTE ORIENTATION METHOD
00: -
This invention relates to a bank note storage container (16), and more specifically, but not exclusively, a bank note storage container (16) which has an orientation device (1) for orientating bank notes (12) in a receptacle such as a bag (6) of a cash deposit safe (10). The bank note storage container (16) comprising a secure container body having a receiving aperture (11) in a wall of the container body for receiving bank notes (12) therethrough into the container body and an orientator (1) inside the container body for supporting some of the bank notes (12) out of a horizontal plane.

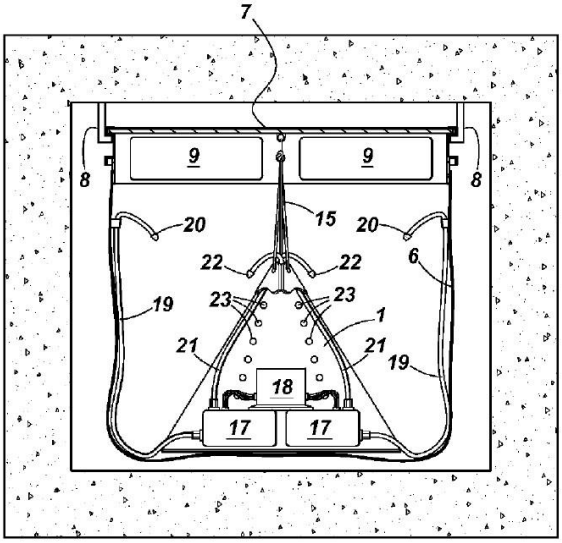

21: 2023/02083. 22: 2023/02/20. 43: 2023/08/23
51: A61K; A61P
71: Chugai Seiyaku Kabushiki Kaisha
72: KANOH, Takeo, NAKAE, Shinichi
33: JP 31: 2020-125822 32: 2020-07-22

54: COMPOSITION CONTAINING ARYLAMIDE DERIVATIVE

00: -

The present disclosure provides a composition that contains, for example, 2-(4-cyclopropyl-2-fluoroanilino)-3,4-difluoro-5-[[3-fluoro-2-methyl-(methysulfamoylamino)pyridin-4-yl]methyl]banzamide or a pharmaceutically acceptable salt thereof, or a pharmaceutically acceptable solvate of the compound or salt, a dispersant (for example, methyl cellulose) and/or a basic compound (for example, meglumine). According to the present disclosure, provided is a composition containing a specific arylamide derivative that has an RAF/MEK complex stabilizing activity and/or MEK inhibitory activity and is useful for treating or preventing cell proliferative diseases, in particular, cancer. This composition has excellent characteristics concerning the dissolution properties and/or stability of the arylamide derivative therein.

21: 2023/02145. 22: 2023/02/21. 43: 2023/08/30
51: A01K
71: ROGZ (PROPRIETARY) LIMITED
72: RAUBENHEIMER, IRENÉ, METELERKAMP, PETER CAREL REX
33: GB 31: 2202320.4 32: 2022-02-21

54: LEASH CONNECTOR

00: -

This invention concerns a leash connector for connecting a leash and gear worn by an animal. The leash connector includes first and second end sections and a flexible releasing member. The first end section defines an eye through which a portion of the first end section can extend to define a cow hitch. The second end section is receivable in the cow hitch and carries a retaining formation for holding it captive in the tightened cow hitch to secure the leash and the gear to one another. A flexible releasing member is provided for loosening the cow hitch and releasing the second end section from the first end section.

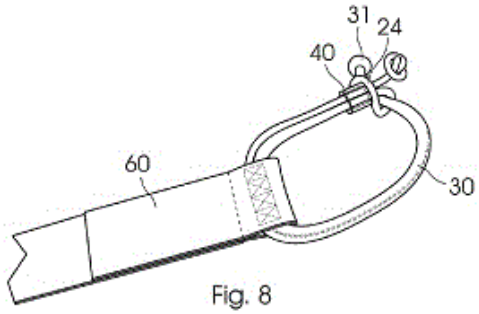

Fig. 8

21: 2023/02150. 22: 2023/02/21. 43: 2023/08/29
51: A01N; C05G; C12N
71: BIOCONSORTIA, INC.
72: AKUM, Fidele, ALFORD, Betsy, PATRI, Abhishek, WILK, Debora, ZHU, Hong
33: US 31: 63/072,666 32: 2020-08-31

54: IDENTIFICATION OF AGRICULTURALLY BENEFICIAL MICROBIAL COMPOSITIONS AND USES THEREOF

00: -

The present disclosure relates to methods of identifying microorganisms that produce metabolites useful in agriculture, amongst other fields of application. The present disclosure further relates to compositions that include the metabolites, or the microorganisms that produce the metabolites, and methods for using the same in agriculture and other fields of application.

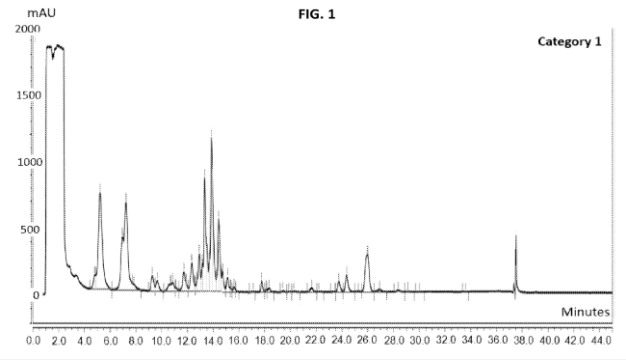

21: 2023/02154. 22: 2023/02/21. 43: 2023/08/29
51: A61K
71: HUYABIO INTERNATIONAL, LLC
72: BISSONNETTE, Reid P., CESARIO, Rosemary M., GOODENOW, Robert, SHOJAEI, Farbod, GILLINGS, Mireille
33: US 31: 63/070,173 32: 2020-08-25
54: METHODS AND COMPOSITIONS FOR GENETIC MODULATION OF TUMOR MICROENVIRONMENTS
00: -
Provided herein is a therapy comprising an HDAC inhibitor (HDACi), and/or a PD-L1 and/or a PD-1 inhibitor, and/or a CTLA-4 inhibitor. The combination therapy provided herein can be a kit or the composition or a pharmaceutical composition. Also, provided herein is a method of treating cancer using the combination therapy.

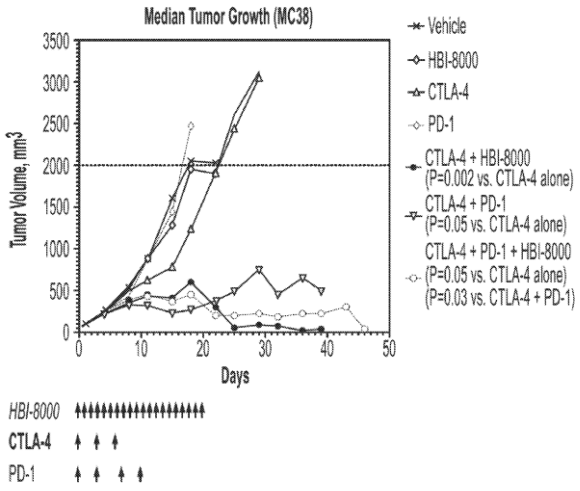

21: 2023/02517. 22: 2023/02/24. 43: 2023/08/30
51: A61Q
71: GODREJ CONSUMER PRODUCTS LTD.
72: YADLAPALLI, VENKATESWARA RAO , JHA, ADRIJA, NAIK, JOHN, GAUR, MANOJ, BIBALS, REENA, RAGHAVACHARI, RAJAN, RAWAT, RUPINDER
33: IN 31: 202221010206 32: 2022-02-25
54: A NATURAL VEGETABLE SOURCE BASED HAIR COLOUR
00: -
The present invention describes a novel natural hair colour composition containing (a) a mixture of basic salt which aid in opening the hair cuticle and facilitating better penetration of dye which is natural plant-based extract; (b) a metal salt based mordanting agent which form a dye-metal complex. The invention further describes 2 step method of application which give better penetration and hence improved colour delivery and wash off resistance.

21: 2023/02529. 22: 2023/02/24. 43: 2023/08/30
51: E04H; F04D; F28C
71: EVAPTECH
72: DOBNEY, Donald A., REITH, Daniel J.
33: US 31: 63/061,065 32: 2020-08-04
33: US 31: 17/393,132 32: 2021-08-03
54: COOLING TOWER FAN CYLINDER
00: -
A segmented/modular cooling tower fan cylinder having basic segments, a motor segment and an access segment, assembled to form an hourglass shaped cooling tower fan cylinder to protect fan blades, reduce sound and vibration, and enhance performance. The segments are preferably molded fiberglass composite structures having integrally molded vertical and horizontal ribs and a horizontal rib stiffener which connects horizontal ribs of adjacent segments. A top ring stiffener is provided at the junction of each two adjacent segments in the top ring flange. Lifter bars may be provided inside a central vertical rib of the segment to secure cables or straps to hoist an assembled fan cylinder into its final location or to secure a safety harness for workers servicing equipment in the interior space defined by the fan cylinder.

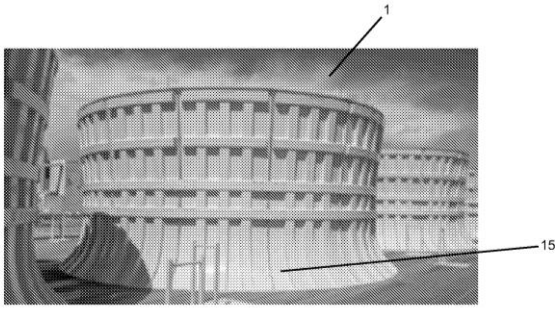

21: 2023/02873. 22: 2023/02/27. 43: 2023/08/30
51: A23L; A61K; B01J
71: IAMFLUIDICS HOLDING B.V.
72: KAMPERMAN, Tom, TAHAN LATIBARI, Sara, PARRAGA MENESES, Jenny Evelin
33: NL 31: 2026204 32: 2020-08-03
54: METHOD OF PRESERVING A REACTIVE ACTIVE COMPOUND, CAPSULE AND FORMULATION.
00: -
A reactive active compound is brought in a liquid. Said liquid, containing said active compound, is encapsulated by a surrounding shell layer and comprises an emulsion of a first liquid in a second liquid. Said active compound is dispersed in said first liquid. Said first liquid, containing said active compound, is dispersed in a second liquid that is substantially immiscible with said first liquid to form said emulsion. Said emulsion is encapsulated by said shell layer to preserve said reactive active compound in one or more a capsules that may be applied in a formulation.

21: 2023/02877. 22: 2023/02/27. 43: 2023/09/27
51: G06K
71: SHANGHAI UNIVERSITY OF MEDICINE AND HEALTH SCIENCES
72: ZHOU, Liang, ZHANG, Siwen, WU, Tao, WANG, Shuangcheng
54: CAUSAL NETWORK ANALYSIS METHOD FOR HIGH DIMENSIONAL SMALL SAMPLE TIME SERIES
00: -
The present invention relates to a causal network analysis method for high dimensional small sample time series. The localization of causal network learning for high dimensional time series data is realized by variable grouping, and the reliability of intra-group variable causal network learning is improved by combining variable sorting, local greedy scoring-searching and maximum likelihood estimation; and by introducing information extraction variables and combining a collection structure and Gibbs sampling, the progressive iterative learning of the information extraction variables is performed, so that the information extraction variables can effectively collect the horizontal non-time-delay information and the vertical time-delay information of variable groups, and enhance the information transfer of the variables within and between groups. The effectiveness of the causal network learning method for high dimensional small sample time series data is verified by a distribution-based sampling classification recognition accuracy calculation method.

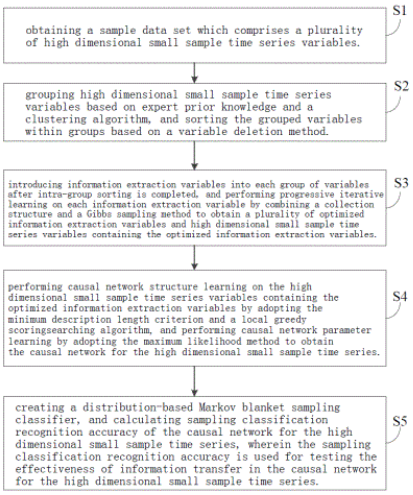

21: 2023/03228. 22: 2023/03/01. 43: 2023/09/20
51: B23K
71: IPG PHOTONICS CORPORATION
72: PINARD, Adam, SHKURIKHIN, Oleg, MARKUSHOV, Iurii, LESLIE, Walter, DELPHIA, Adrian, DAPSHI, Elvis, LY, Nam, GRAPOV, Yuri
33: US 31: 63/069,816 32: 2020-08-25
33: US 31: 63/089,113 32: 2020-10-08
54: HANDHELD LASER SYSTEM
00: -
A handheld laser system. In certain examples the handheld laser system includes a laser source emitting laser light at a wavelength for performing a material processing operation on a workpiece material with a laser beam of the emitted laser light, a plasma sensor configured to detect plasma emitted from the workpiece material during a material processing operation, and a controller

coupled to the plasma sensor and configured to: compare an optical intensity value obtained by the plasma sensor to a threshold value at a time when a predetermined time period has elapsed after the material processing operation has commenced, and produce a control command based on the comparison.

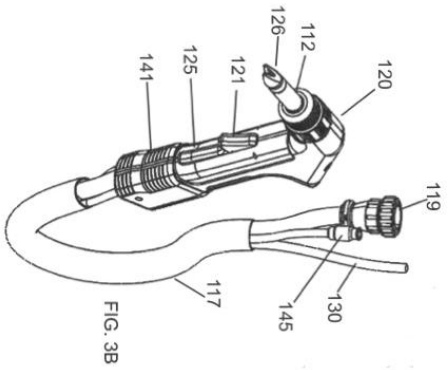

FIG. 3B

21: 2023/03235. 22: 2023/03/01. 43: 2023/09/20
51: F22B
71: MACKWELL PERO & CO LTD
72: MACKWELL, Samuel James
33: NZ 31: 767635 32: 2020-09-02
54: STEAM GENERATOR
00: -
A steam generator which may be mobile or stationary, which includes a fire box the outlet of which Is connected to a cyclone section; the outlet of the cyclone section opens into a water tube steam boiler, with the connection between the cyclone section and the water tube steam boiler being such that all the cyclone section substantially isolates the water tube steam boiler from the radiant heat of a fire in the fire box; a structural shell contains the fire box; cyclone section and water tube steam boiler and is arranged to both provide a containment vessel if the contained components fail in use and also to bear any of the structural loads applied to the generator in use.

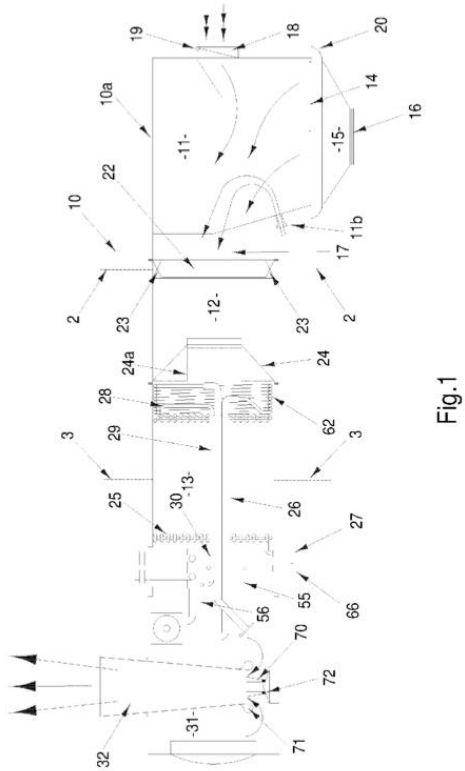

Fig.1

21: 2023/03240. 22: 2023/03/01. 43: 2023/09/20
51: A63F; G06F; G07F; G06Q
71: COETZER, Cornelius Johannes
72: COETZER, Cornelius Johannes
33: ZA 31: 2020/04815 32: 2020-08-04
54: BETTING MARKETS
00: -
The invention provides for a computer-implemented method of administering a betting market for sports, the method includes the steps of receiving game details for a game between two parties, which includes probabilities of each outcome in an array of possible outcomes of the game, calculating an array of odds on the game details and determining a pivot in the array of possible outcomes based on the array of odds, with a first and second group of outcomes defined on opposing sides of the pivot, respectively, or on the pivot. Thereafter, bets are received from participants, each bet relating to either the first or second group of outcomes, until a predefined cut off time or outcome, whereafter a game outcome is received, and a reward is calculated for those participants who betted on the group outcome in which the game outcome falls, based on the odds calculated for the game outcome.

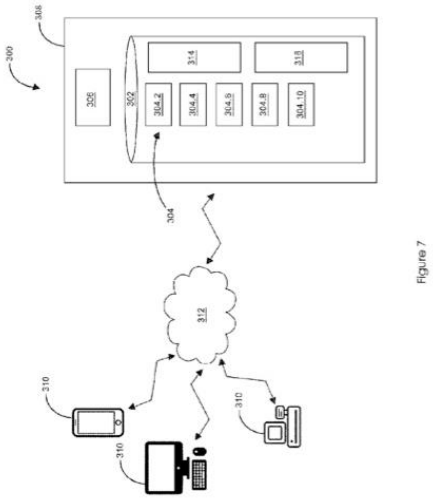

Figure 7

21: 2023/03249. 22: 2023/03/01. 43: 2023/09/14
51: B05C; B23P; B25G
71: CHANEY, David M.
72: CHANEY, David M.
33: US 31: 63/060,749 32: 2020-08-04
54: PAINT ROLLER ASSEMBLY
00: -
A paint roller assembly for allowing a sufficient amount of pressure to be applied for distributing paint evenly is disclosed. The paint roller assembly includes a pair of frame members. One frame member includes a handle. A cylindrical-shaped core is attached to another end of each of the frame members. In one aspect, the pair of frame members are coupled to each other at a first end by a variety of different coupling mechanisms. When assembled, a central, longitudinal axis of the handle is substantially parallel to a central, longitudinal axis of the cylindrical-shaped core, thereby allowing the user to apply sufficient pressure to more evenly distribute paint during use.

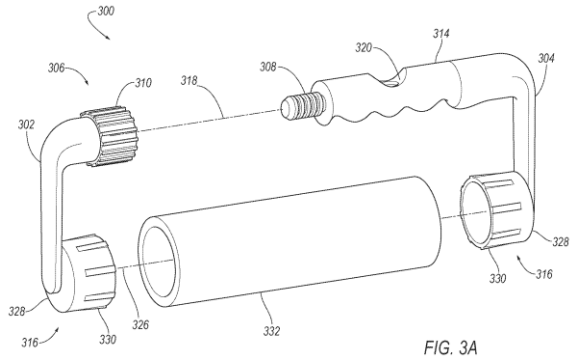

FIG. 3A

21: 2023/03264. 22: 2023/03/02. 43: 2023/09/20
51: G01N
71: HUADIAN WATER TECHNOLOGY CO., LTD.
72: SHAO, Junli, WANG, Zhengping, FU, Yanfeng, ZHENG, Yijiang, MENG, Lu
33: CN 31: 202210202157.7 32: 2022-03-02
54: COLLECTING DEVICE AND SAMPLING METHOD FOR GREENHOUSE GASES IN AERATION TANK OF SEWAGE PLANT
00: -
A device is disclosed for collecting greenhouse gases in an aeration tank of a sewage plant, comprising a bio-aeration tank. An air collecting cover is provided above the bio-aeration tank. The air collecting cover is connected with an A pipeline and an air processor. The air collecting cover is connected with the air processor through the A pipeline. The air processor is connected with a B pipeline and an A spectrometer. The air processor is connected with the A spectrometer through the B pipeline. A C pipeline is provided between the A spectrometer and the air collecting cover, and the A spectrometer is connected with the air collecting cover through the C pipeline. A sampling method for greenhouse gases in an aeration tank of a sewage plant is further provided.

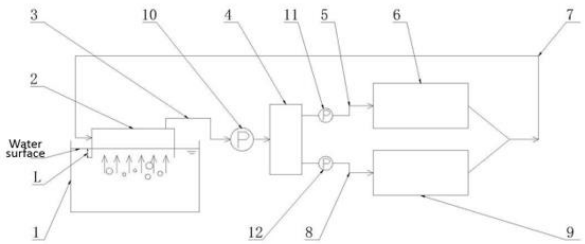

21: 2023/03267. 22: 2023/03/02. 43: 2023/09/20
51: C12Q

71: LONGHORN VACCINES & DIAGNOSTICS, LLC
72: FISCHER, Gerald W., DAUM, Luke T.
33: US 31: 63/073,258 32: 2020-09-01
54: COMPOSITIONS AND METHODS FOR SCREENING BIOLOGICAL SAMPLES
00: -
The invention is directed to compositions and methods for isolating, detecting, amplifying, and quantitating pathogen-specific nucleic acids in a biological sample, and in particular PCR ready compositions that contain enzyme and are stable or long periods of time. The invention also provides diagnostic kits containing specific amplification primers and labeled detection probes that specifically bind to the amplification products obtained therefrom. Also disclosed are compositions and methods for the isolation and characterization of nucleic acids that are specific to one or more pathogens, including for example Influenza virus and Mycobacterium tuberculosis, from a wide variety of samples including those of biological, environmental, clinical and/or veterinary origin.

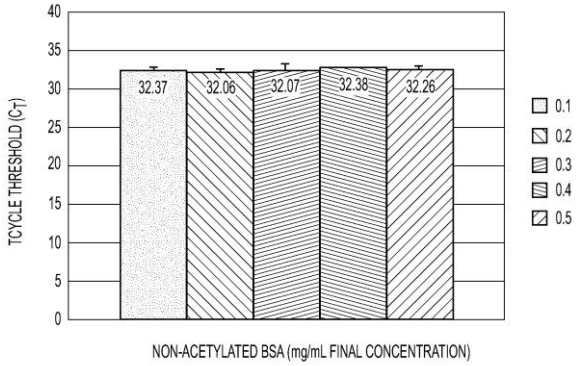

BSA (NON-ACETYLATED) mg/ml

0.1	0.2	0.3	0.4	0.5
32.25	31.98	31.89	32.33	32.21
32.58	32.09	32.25	32.42	32.17
32.28	32.1	32.07	32.4	32.41
AVG. = 32.37	32.06	32.07	32.38	32.26
S.D. = 0.18	0.07	0.18	0.05	0.13

(CYCLE THRESHOLD)

21: 2023/03344. 22: 2023/03/06. 43: 2023/09/13
51: G03G
71: ZHUHAI PANTUM ELECTRONICS CO., LTD.
72: SHAO, Zhe, YIN, Aiguo
33: CN 31: 202010888189.8 32: 2020-08-28
54: TONER CARTRIDGE, METHOD FOR DETECTING REMAINING TONER AMOUNT, AND IMAGE-FORMING APPARATUS
00: -
The present disclosure provides a toner cartridge, a method for detecting a remaining toner amount, and an image-forming apparatus. The toner cartridge, installed on an image-forming apparatus, includes a toner hopper, configured to hold toner; a stirring unit, disposed in the toner hopper and configured to stir the toner in the toner hopper; and a detection unit, disposed on the stirring unit and configured to be in contact with the toner during a process of stirring the toner by the stirring unit and output a current signal. A housing of the toner cartridge is disposed with electrical connection contacts, and the detection unit is electrically connected to the image-forming apparatus through the electrical connection contacts. Whether the toner cartridge is short of toner before printed images are defective due to lack of toner is realized, and the detection process is relatively convenient with low detection cost.

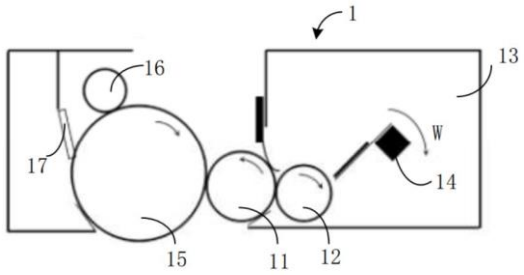

21: 2023/03377. 22: 2023/03/07. 43: 2023/09/19
51: A01G
71: IRROVATE (PTY) LTD
72: CLARKE, Richard Enslin
33: ZA 31: 2020/00952 32: 2020-08-14
54: SUB-SURFACE SOIL IRRIGATION
00: -
Irrigation apparatus (70) is provided that includes an elongate housing (10) with an internal cavity (14) and a dispenser (24,76) that is fitted at a top of the cavity (14). The housing (10) is installed in soil and the dispenser (24,76) is supplied with water, which is dispensed into the cavity (14), to drip to an exposed soil surface (104) at the bottom of the housing (10), to provide water to plants.

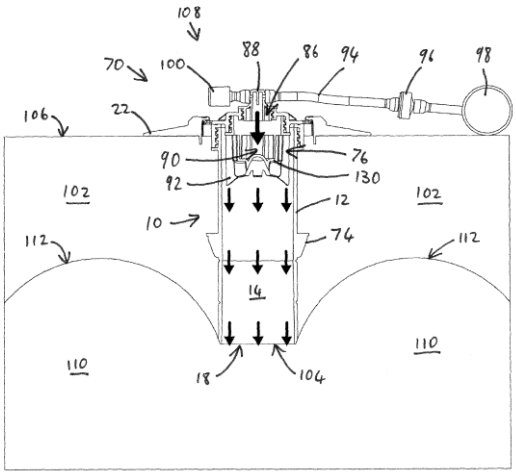

21: 2023/03379. 22: 2023/03/07. 43: 2023/09/19
51: B01D
71: REPG ENERJI SISTEMLERI SANAYI VE TICARET ANONIM SIRKETI
72: AYARTURK, Hasan
33: TR 31: 2020/14598 32: 2020-09-15
54: AIR-SOLUTION REGENERATION DEVICE
00: -
The present invention is an air-solution regeneration device (100) for providing equalization of the vapor pressure of a solution, which exists in a solution chamber (120), to the vapor pressure of the air which exists in the medium. Accordingly, the subject matter air-solution regeneration device (100) comprises a solution pump (110) for increasing the pressure of the solution which exists in said solution chamber (120); an air-solution injector (130) which is in venturi type and which has a drive end (131) which receives the solution, having increased pressure, as input (154), a suction end (132) for realizing air suctioning when there is liquid input (154), having increased pressure, through the drive end (131), a spray end (133) where the solution, received from said drive end (131), and the air, suctioned from said suction end (132), are sprayed; an electrostatic filter (140) where the air-solution mixture is sprayed; and an air-solution separator (150) which has a centrifuge unit (151) for providing separation of the air solution mixture, received from the input (154), from each other, and an output chamber (153) for collecting the solution which is separated from air and which has been brought to equal vapor pressure as the air vapor pressure.

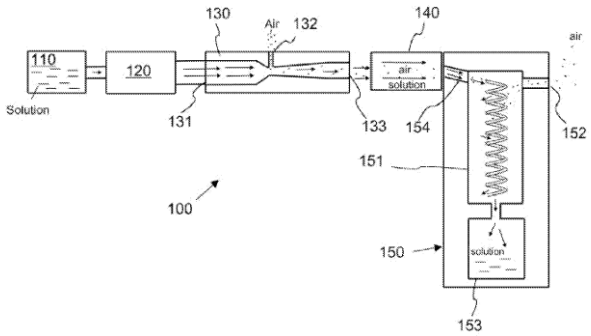

21: 2023/03386. 22: 2023/03/07. 43: 2023/09/19
51: G08G
71: VETRASOFT
72: AHMED ADNANE
33: MA 31: 50826 32: 2020-09-07
54: STAND-ALONE DECISION-MAKING TRAFFIC LIGHTS
00: -
The device and method of the invention implement a road traffic regulation system for traffic lights, the system being provided with an orientable image capture module, an on-board system provided with a hardware acceleration solution, a control system, a hardware watchdog and a secure wireless transmission module. Said system makes it possible to take control of junctions at traffic lights in a completely autonomous and smart manner that does not require any centralized management or equipment, in particular a junction controller, by adopting dynamic and adaptive regulation plans according to the traffic situation. Indeed, the orientable image capture module makes it possible to capture images of road traffic in a raw, ie uncompressed, format. The flow of images is routed to the on-board system through a high-speed link. The on-board system is a processing unit provided with a hardware acceleration solution. The on-board system processes video streams using artificial intelligence mechanisms in order to extract decision-making information relative to the regulation plan. The wireless transmission system allows said information to be shared with the rest of the smart traffic light modules in a secure manner. Thanks to a distributed algorithm, the smart traffic light modules calculate the best regulation plan relative to the traffic situation. Thanks to the control system, the various traffic light modules are controlled according to the calculated regulation plan. The hardware watchdog is used to ensure that the system is

working properly and to take control, if necessary, after initializing it. In this way, a fully distributed and autonomous coordination between the different devices of the invention is achieved. Said coordination may be restricted to the junction, or may otherwise be comprehensive, integrating data from other junctions throughout the entire road network.

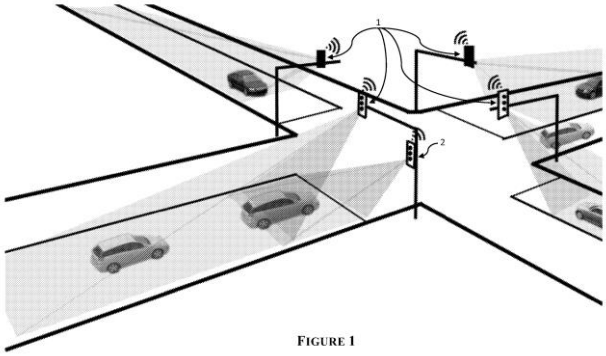

FIGURE 1

21: 2023/03387. 22: 2023/03/07. 43: 2023/09/27
51: G01M
71: WEST ANHUI UNIVERSITY
72: WU, Congbing, ZHOU, Hongxia
33: CN 31: 202210489181.3 32: 2022-05-06
54: DURABILITY TEST DEVICE FOR TRANSVERSE MOVING ASSEMBLY OF AUTOMOBILE ELECTRIC SEAT
00: -

Disclosed is a durability testing device for transverse moving assembly of an automobile electric seat, which pertains to the field of durability testing of the transverse moving assembly of the automobile electric seat. The test device includes a workbench, a box, a roof cover and a first engaging mean. It is possible to add load to the durability test of the transverse moving assembly to improve the reliability of test results by fixing slide rails on the workbench and adding a counterweight block in a box fixed on a slider. In addition, the load can be adjusted by changing the weight of the counterweight block, so as to obtain more comprehensive test data and further improve the reliability of the test result. A roof cover and the first engaging means provided on an upper end of the box allows the test timing to be linked to the position state of the roof cover to prevent the counterweight block inside the box from being thrown out during the test. A clamping mechanism and a second engaging means provided on the working table allows the test timing to be linked to the clamping mechanism to ensure the stability of the endurance test process.

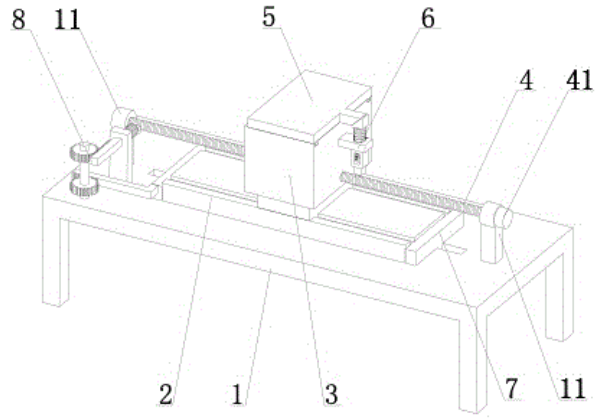

21: 2023/03426. 22: 2023/03/08. 43: 2023/09/19
51: B66F
71: CHAIRMAN, DEFENCE RESEARCH & DEVELOPMENT ORGANISATION (DRDO)
72: VARANASI, Rama Krishna, NANDAGOPAN, Obla Ramanandam, MALLYA, Parikshith, KUMAR, Uppada Urban, KULKARNI, Chandru Patreyya
33: IN 31: 202011042842 32: 2020-10-01
54: AN ARTICLE HANDLING SYSTEM
00: -

The present invention discloses an article handling system (100) for a naval surface warfare vessel/ship. The article handling system (100) comprised a lower frame (105) and an upper frame (110) interconnected by a plurality of scissor lift linkages (115). A plurality of drive units (140, 150, 160) are configured to translate said article (101) mounted said article bed (130) in an upward and a downward, a forward and a rearward and a tilting translational degrees of freedom. Each said drive units (140, 150, 160) are configured to switch said article handling system (100) from a retracted position (RP) to an extended operating position (EP). The article handling system (100) is controlled manually or by a control unit (170a) or a handheld controller (170b).

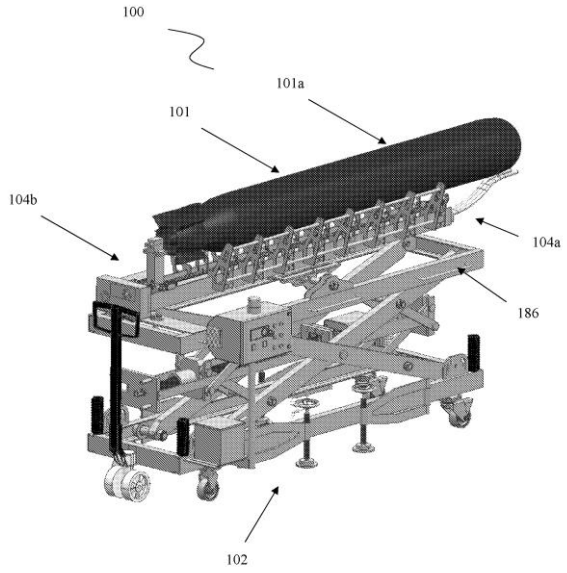

21: 2023/03437. 22: 2023/03/09. 43: 2023/09/19
51: H02S
71: ALLEN, Charl Louis
72: ALLEN, Charl Louis
54: MOUNTING SYSTEM FOR A PHOTOVOLTAIC MODULE
00: -
This invention relates to a mounting system 10 suitable for mounting a photovoltaic module 100 on a support structure 102. The system 10 comprises at least one main support assembly 12 that includes a first elongated member 14 and a second elongated member 16 which are telescopically displaceable A relative to each other. The main support assembly 12 further comprises a first mounting bracket 24 secured proximate to an end 14.2 of the first elongated member 14 to render it is pivotably movable B, and a second mounting bracket 26 secured proximate to an end 16.2 of the second elongated member 16 to render it is pivotably movable F.

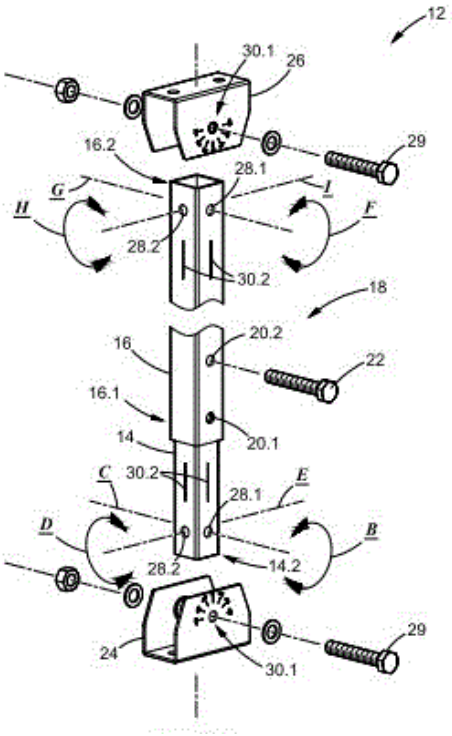

21: 2023/03439. 22: 2023/03/09. 43: 2023/09/26
51: B01J; C01B
71: NORTH CHINA UNIVERSITY OF SCIENCE AND TECHNOLOGY
72: GE, Ming, SONG, Tingting
54: MAGNETIC ZINC COPPER FERRITE CATALYST FOR ACTIVATING PERSULFATE AND PREPARATION METHOD THEREOF
00: -
The present disclosure belongs to the technical field of environmental protection, and particularly relates to a heterogeneous catalyst magnetic zinc copper ferrite for activating persulfate and a preparation method thereof. The present disclosure provides a preparation method of a heterogeneous catalyst magnetic zinc copper ferrite for activating persulfate, which is simple in process, low in cost, and green and environmental-friendly, thereby overcoming the defects that the traditional persulfate activating technology is narrow in pH application scope, low in removal efficiency and difficult recovery.

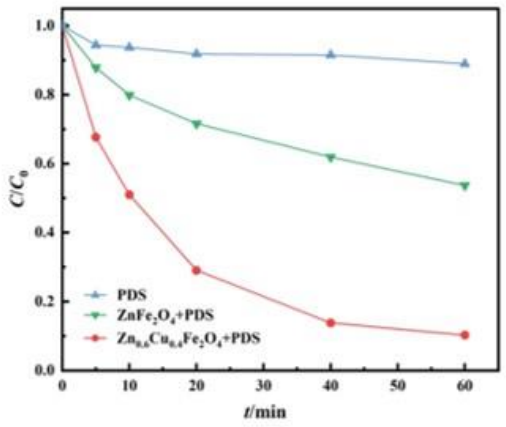

21: 2023/03462. 22: 2023/03/10. 43: 2023/09/27
51: A23L
71: QIANSHAN COUNTY LVHE ORGANIC RESOURCES DEVELOPMENT CO., LTD.
72: LIN, Shuhong, JIANG, Xinfeng, ZHAN, Jiayi, JIANG, Ping, LI, Chen, LIU, Caixia, LI, Lingzhi, ZHAN, Yan, WEN, Yanqin, LIANG, Yiming
54: TEA LEAF PROCESSING METHOD FOR INCREASING CONTENT OF TEA POLYPHENOLS AND BREWING WITH WARM WATER AND TEA LEAF
00: -
The present invention discloses a tea leaf processing method for increasing content of tea polyphenols and brewing with warm water and tea leaf, and belongs to the technical field of tea leaf processing. The method includes the following steps: (1) fresh leaf picking and spreading; (2) vacuum drying; (3) cooling; (4) fixation; (5) rolling; and (6) baking. In the production method of the present invention, various steps are closely linked to each other and are all needed, which may effectively increase the content of the tea polyphenols to make the tea leaves taste sweet, mellow and thick; and the tea leaves may be brewed with the warm water, so that the operation is simple, and the production method is suitable for large-scale production and application.

21: 2023/03480. 22: 2023/03/10. 43: 2023/09/19
51: G06K
71: SHANGHAI UNIVERSITY OF MEDICINE AND HEALTH SCIENCES
72: ZHOU, Liang, BALASUBRAMANIAN, Vinoth Kumar, ZHANG, Siwen, WU, Tao, JAGADEESAN, Prakash, WEN, Shiman
54: METHOD AND SYSTEM FOR POSITIONING OPTIC DISC IN FUNDUS IMAGE
00: -
A method and system for positioning an optic disc in a fundus image, which relates to the technical field of image processing, and the method includes: acquiring a fundus image, removing a background of the fundus image to obtain a foreground fundus image, and detecting an optic disc of the foreground fundus image to determine an optic disc region on the basis of an intensity of each pixel in the foreground fundus image by using a jaya algorithm. Without having to adjust parameters, this invention reduces the complexity of the positioning method, improves the efficiency of positioning the optic disc, and increases the accuracy of positioning the optic disc through a detection based on the intensity of each pixel.

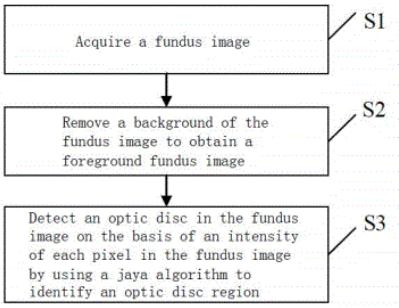

21: 2023/03509. 22: 2023/03/13. 43: 2023/09/21
51: H04M
71: VODACOM (PTY) LTD.
72: PIENAAR, Vernon
54: BASE STATION COMPRISING A MAST
00: -
A cellular telecommunications base station is described. A mast of the base station comprises earthed electrically conducting structural fabric. The base station also comprises one or more antennae mounted to an upper portion of the mast, one or more remote radio units mounted to the mast proximally to the antennae and arranged to use the antennae to communicate with a plurality of cellular telecommunications terminals, a power supply arranged to provide electrical power to power the remote radio units using a live path current and an earthed path current, and one or more power cables. The power cables are used to carry the live path current, and the electrically earthed structural fabric

of the mast is used to carry the earthed path current. In some embodiments, the power cables are made up of one or more electrical conductor strands substantially none of which is formed of a copper material.

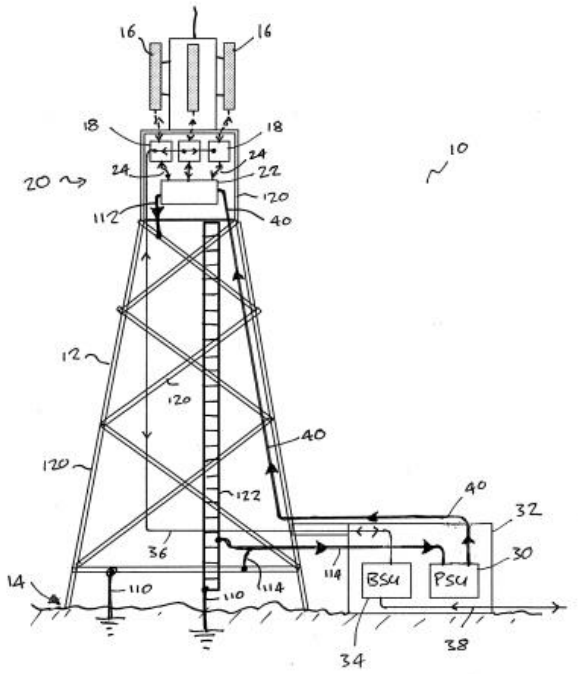

21: 2023/03511. 22: 2023/03/13. 43: 2023/09/21
51: A23L
71: HEBEI NORMAL UNIVERSITY OF SCIENCE & TECHNOLOGY
72: ZHAO, Yuhua, GUO, Xueying, LIU, Xu, CHANG, Xuedong

54: GRANULAR CHINESE CHESTNUT STUFFING AND PROCESSING METHOD THEREFOR

00: -

The present invention discloses a granular Chinese chestnut stuffing and a processing method therefor, which belongs to the technical field of Chinese chestnut processing. The present invention adopts Chinese chestnuts and adzuki beans as main raw materials supplemented with coix seed and red dates, and performs scientific proportion of nutrients to produce the Chinese chestnut stuffing with high value by improving the existing processing technology. The stuffing is rich in diced Chinese chestnuts, contains no grease and additive, contains 8 kinds of essential amino acids for the human body, and has excellent characteristics of rich taste, high nutritional value, easy agglomeration, and simple and convenient operation. The Chinese chestnut stuffing can promote the diversification of Chinese chestnut products and conversion of raw materials; and the processing method is high in operability and practicability, wide in audience and suitable for market popularization.

21: 2023/03556. 22: 2023/03/14. 43: 2023/09/21
51: E21B
71: Henan Sunho Coal & Power Co., Ltd
72: Mintao WEI, Jingyu JIANG, Runsheng SHEN, Wei ZHANG, Jingjun ZHANG, Geqiang ZHANG, Zihua CHENG, Hongwei YANG, Hongtao CHEN, Gang CHEN
33: CN 31: 202310014927.X 32: 2023-01-06

54: PRECISE CUTTING METHOD FOR ENERGY OUTBURST UNIT OF THICK COAL BELT IN COAL MINE TECTONIC AREA

00: -

A precise cutting method for the energy outburst unit of a thick coal belt in the coal mine tectonic area includes: drilling a parameter measurement hole on a coal bed away from a thickened zone near a fault of the coal bed from a floor roadway, sampling and measuring a first gas content of the coal bed not affected by the fault; drilling five induced spray holes on the thickened zone near the fault from the floor roadway, and when a coal exposure point is observed, sampling and measuring a second gas content, and recording a second drill pipe torque; drilling a wind power expansion hole between every two adjacent induced spray holes from the floor roadway, performing hole expansion through wind power from a roof to floor of the coal bed, to form a plurality of second pressure relief and air-permeable rings.

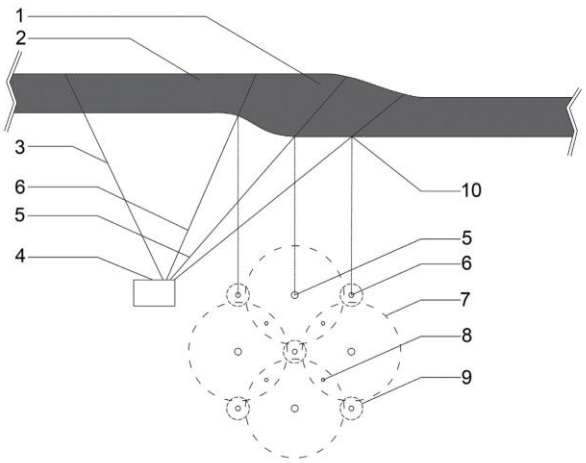

21: 2023/03564. 22: 2023/03/14. 43: 2023/09/21
51: A47J
71: PREMIER SPECIALTY BRANDS, LLC
72: CARTER, Adam, GAZDICK, Donald, Stephen III, MERCER, Daniel, PRUITT, Joseph, AASNESS, Kyle
33: US 31: 63/081,198 32: 2020-09-21
54: INTEGRATED KAMADO-STYLE GRILL AND SMOKER
00: -
The disclosed embodiments provide a kamado-style grill and smoker having one or more air-intake openings and one or more exhaust openings. Like conventional kamado-style grills and smokers, a user may manually adjust the air-intake opening(s) and/or exhaust opening(s) to manually control the air flow, and thus the temperature, within the cooking chamber. However, unlike the prior art, the kamado-style grill and smoker includes an integrated fan unit that provides a completely different and alternative air-intake pathway for drawing air into the cooking chamber and controlling the cooking or smoking temperature using a fan. By providing this alternative mechanism for controlling the temperature in the cooking chamber, the kamado- style grill and smoker disclosed herein can be operated using either manual or automated temperature control, making it accessible to both novice and experienced users alike.

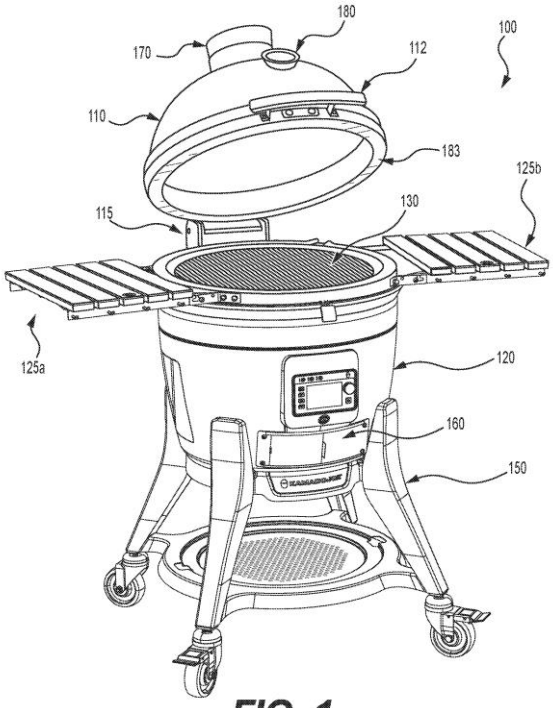

FIG. 1

21: 2023/03592. 22: 2023/03/15. 43: 2023/09/26
51: C04B
71: GEOPOLYMER SOLUTIONS, LLC
72: ZUBROD, Rodney
33: US 31: 17/696793 32: 2022-03-16
54: PROCESS FOR PREPARING COLD FUSION CONCRETE AND CEMENT COMPOSITIONS FROM METAL MINING AND PRODUCTION WASTE
00: -
Methods of preparing cold fusion concrete and cement using mining waste are described.

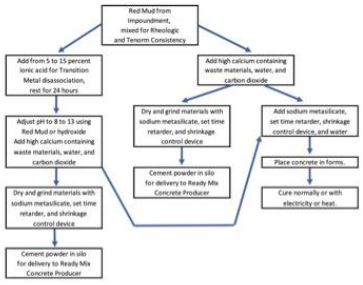

21: 2023/03601. 22: 2023/03/15. 43: 2023/09/26
51: A61K; C07K; A61P
71: MAYO FOUNDATION FOR MEDICAL EDUCATION AND RESEARCH
72: BARRY, Michael A.

33: US 31: 63/066,740 32: 2020-08-17
33: US 31: 16/996,740 32: 2020-08-18
54: ADENOVIRUS VECTORS AND METHODS FOR USING ADENOVIRUS VECTORS
00: -
This document provides adenovirus vectors and methods and materials related to using adenovirus vectors. For example, adenoviruses for delivering nucleic acid encoding one or more immunogens (*e.g.*, one or more immunogens associated with a pathogen causing an infection) to cells within a mammal such that the mammal produces an effective immune response against the immunogen(s) are provided.

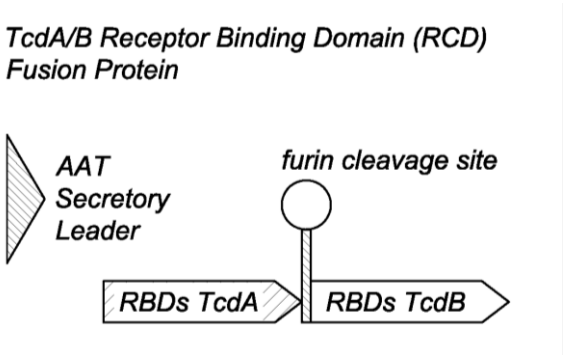

21: 2023/03639. 22: 2023/03/16. 43: 2023/08/16
51: C07K
71: ONCOONE RESEARCH & DEVELOPMENT GMBH
72: SCHINAGL, Alexander, MIRKINA, Irina, KERSCHBAUMER, Randolf, THIELE, Robert Michael
33: EP 31: 20199829.1 32: 2020-02-10
54: IMPROVED ANTI-OXMIF ANTIBODIES WITH REDUCED AGGREGATION POTENTIAL AND REDUCED HYDROPHOBICITY
00: -
The invention refers to anti-oxMIF antibodies with improved properties such as reduced aggregation potential and reduced hydrophobicity due to selected amino acid substitutions in the light and heavy chain variable domains and optionally increased effector functions due to further substitutions in the heavy chain constant regions, and their use in the treatment of oxMIF-related conditions.

21: 2023/03760. 22: 2023/03/23. 43: 2023/10/12
51: B22D; G05B
71: KUNMING UNIVERSITY OF SCIENCE AND TECHNOLOGY
72: LIU, Daiwei, ZHANG, Guifang, MOU, Lilin
54: DEVICE FOR INHIBITING TIN INCLUSIONS FROM BLOCKING MOLD WATER PORT OF HIGH TITANIUM STEEL SLAB AND METHOD THEREOF
00: -
The present invention relates to a device for inhibiting TiN inclusions from blocking a mold water port of a high titanium steel slab and a method thereof, and belongs to the technical field of pyrogenic processes. The device for inhibiting TiN inclusions from blocking the mold water port of the high titanium steel slab comprises an upper heating coil, a lower heating coil, a mold, mold thermocouples, coil power supplies and a control system; and the control system comprises an online temperature acquisition processor, a computer and a PLC power controller. The present invention adopts double-coil combined electromagnetic induction heating to increase the liquid steel temperature at the mold water port to an appropriate range, collects data through a temperature sensor and realizes the closed-loop control of liquid steel temperature by dynamically adjusting the parameters of double coils according to the precipitation temperature of TiN inclusions.

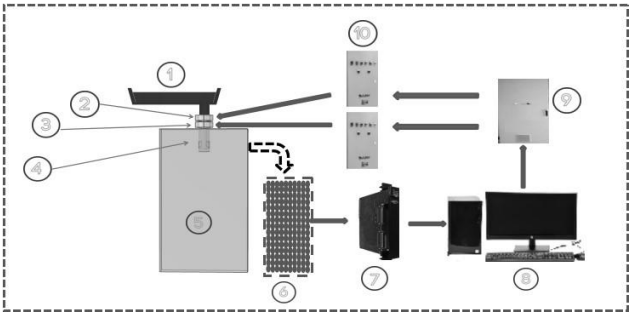

21: 2023/03789. 22: 2023/03/22. 43: 2023/09/29
51: B65G; G06Q
71: INTELLISENSE.IO LIMITED
72: GATICA, Mario Leon, HALLSON, Chris, LABORDE, Cecilia, GEUS, Mark de, MCNAMARA, Hugh, KNOBLAUCH, Niel, KOPEC, Grant, MURRAY, Éamonn
33: EP 31: 20020387.5 32: 2020-08-26
54: A METHOD FOR DYNAMICALLY CONSTRUCTING AND UPDATING A MODEL OF 3D TOPOGRAPHY OF A STOCK-PILE OF GRANULAR MATERIAL
00: -
Disclosed is a method for dynamically constructing and updating a model of 3-dimensional topography of a stock-pile of granular material is provided. The

method includes dumping the granular material to a maximum slope in a column in the stock-pile, wherein the maximum slope is determined by analyzing digital scans of the stock-pile; reducing the maximum slope to a smaller value of the maximum slope, dynamically increasing the maximum slope linearly until it reaches the original value of the maximum slope to obtain a uniformly expanding plateau; defining an adjustable shape comprising a first distance and a second distance, wherein the adjustable shape is flat till the first distance and the second distance beyond which the adjustable shape varies with the maximum slope; and reclaiming the granular material that flows downhill from a center depth to update the model of the 3D topography of the stock-pile.

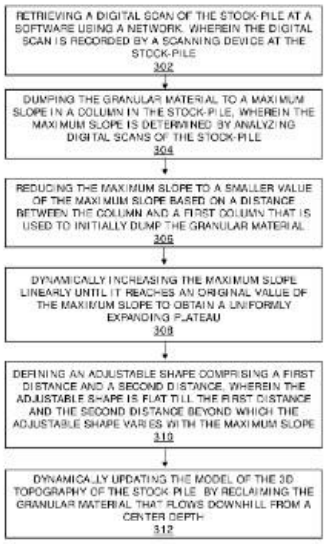

21: 2023/03812. 22: 2023/03/24. 43: 2023/09/27
51: C09K
71: Beijing General Research Institute of Mining &Metallurgy
72: Wang Fang, Wang Qiong, Sun Wei, Gong Xuegang, Pan Hanlin, Tong Zhensong, Shi Peiliang
33: CN 31: 2022112764843 32: 2022-10-19
54: SOIL IMPROVEMENT MATERIAL AND ITS PREPARATION METHOD AND APPLICATION
00: -
The application provides a soil improvement material and its preparation method and application, and relates to the field of solid waste treatment. The soil improvement material comprises the following raw materials in parts by weight: 60-70 parts of waste ammonia adsorbent, 10-20 parts of vegetable gum, 0-20 parts of biochar and 3-10 parts of adhesive; The waste ammonia adsorbent is a waste adsorbent generated by industrial ammonia adsorption treatment, and its adsorption substrate is one or more of activated carbon, molecular sieve, and zeolite. The soil improvement material provided by the application effectively utilizes the waste ammonia adsorbent in industrial production for acid soil improvement in copper mines, and solves the problems of land occupation and environmental pollution caused by the disposal of the waste adsorbent. Through the wrapping effect of vegetable gum, the soil improvement material has good slow-release performance and improves the survival rate of plants.

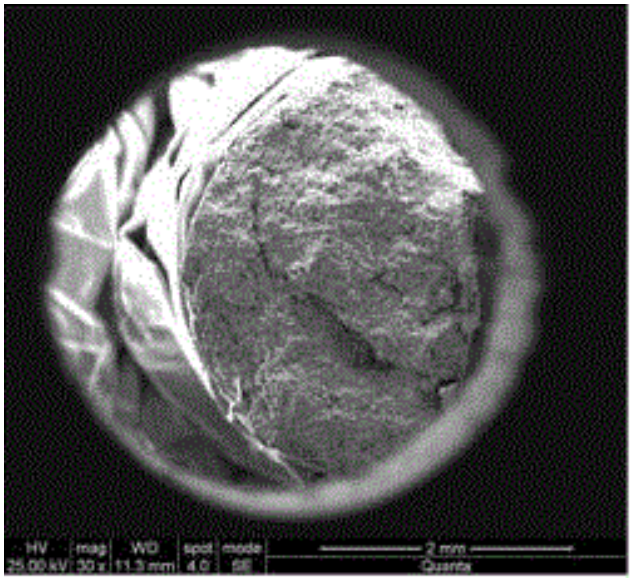

21: 2023/03847. 22: 2023/03/27. 43: 2023/09/27
51: G09F; G06Q; G16Y
71: Dexter Slabbert
72: Dexter Slabbert
54: RISK ASSESSMENT AND MANAGEMENT SYSTEM OF PERSONS AND ASSETS
00: -
The invention provides a method and tool for assessing the risk of an asset by allocating risk factors assessed with individual weighted values, combining the values in accordance with their weighted risk value, whereafter a combined risk grading value is allocated to the assessed asset – the grading value comprising the sum of a plurality of individually assessed risk components. The risk grade awarded to the asset enables a user to determine the suitability of the asset risk pursuant

from a single grade value. The tool similarly provides a user with guidance how to improve the grading value. The grading value may comprise a star rating, percentage rating or any other alpha-numeric or graphic rating.

21: 2023/03859. 22: 2023/03/27. 43: 2023/09/27
51: E21B; E21D
71: JOY GLOBAL UNDERGROUND MINING LLC
72: FOURIE, Willem, LUO, Xuanwen, SUBASCHANDRAN, Vijayanath, WILLAMAN, Patrick, Ross, GEORGIOU, Michael
33: US 31: 63/086,392 32: 2020-10-01
54: BOLTER
00: -
A drilling and bolting rig includes a carousel rotatable about a carousel axis and including a plurality of stations configured to support a plurality of consumables, one or more actuators, and a position sensor coupled to the carousel. The one or more actuators are configured to rotate the carousel about the carousel axis. The drilling and bolting rig further includes an electronic processor coupled to the one or more actuators and the position sensor. The electronic processor is configured to detect, using the position sensor, a rotational position of the carousel, and rotate, using the one or more actuators, the carousel based on the rotational position of the carousel.

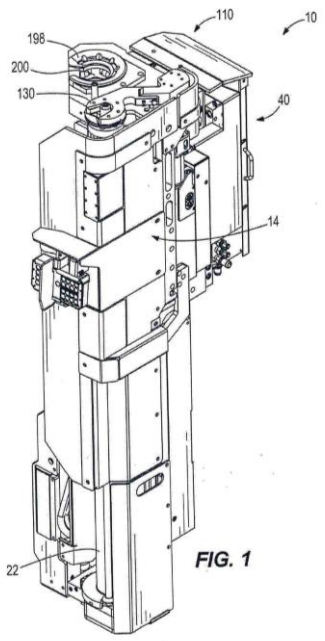

FIG. 1

21: 2023/03902. 22: 2023/03/28. 43: 2023/09/27
51: F42D
71: DETNET SOUTH AFRICA (PTY) LTD
72: MULLER, Elmar Lennox, LIEBENBERG, Abraham Johannes
33: ZA 31: 2020/06083 32: 2020-10-01
54: DETONATOR ASSEMBLY
00: -
A detonator assembly which includes a detonator arrangement comprising a detonator, a receiver which is responsive to a magnetic signal from a control centre and a control circuit which, in response to a signal from the receiver, regulates firing of the detonator, and which is characterised in that a fibre optic cable is connected to and extends from the detonator arrangement, and in that the detonator arrangement includes a transmitter/receiver module which is in signal communication with the fibre optic cable and the control circuit.

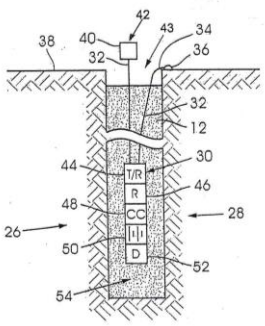

21: 2023/03932. 22: 2023/03/29. 43: 2023/09/27
51: A01H
71: CITRUS RESEARCH INSTITUTE OF ZHEJIANG PROVINCE
72: KE, Fuzhi, HUANG, Xiu, SUN, Lifang, NIE, Zhenpeng, XU, Jianguo, SUN, Jianhua
33: CN 31: 202210514884.7 32: 2022-05-11

54: CULTIVATION METHOD OF GRAFTING SEEDLINGS OF CITRUS RETICULATA BLANCO HYBRID SEEDS

00: -

The present invention discloses a cultivation method of grafting seedlings of Citrus reticulata Blanco hybrid seeds comprising: placing pretreated Citrus reticulata Blanco hybrid seeds on a surface of an agar medium added with hormones and inorganic nutrient elements; covering the seeds; placing in a greenhouse at 25-28? for culture away from light; when seed embryos grow to 15-20 mm, obtaining cultivated Citrus reticulata Blanco hybrid seeds. The method is convenient for observing a radicle length, and improves a medium matrix and additives, so that the grafting seedlings cultivated have robust and straight radicles, and do not need root cutting treatment, thereby avoiding damage of the radicles, improving germination uniformity and a survival rate of the seeds, reducing operation requirements, facilitating daily management, and facilitating subsequent grafting survival; The medium can be used for breeding of new Citrus reticulata Blanco varieties.

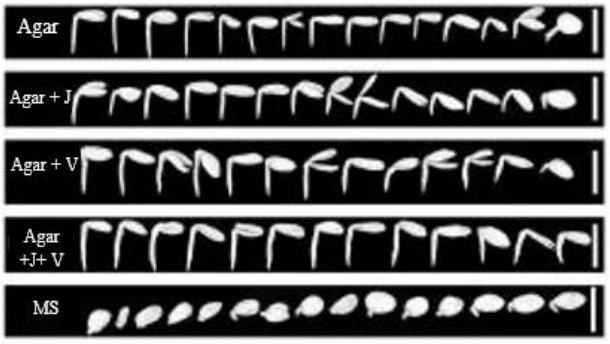

21: 2023/03946. 22: 2023/03/29. 43: 2023/09/27
51: F24F; F25B
71: BEIJING JINGKELUN ENGINEERING DESIGN AND RESEARCH INSTITUTE CO., LTD.
72: YANG, Jianguo, ZHOU, Chengjun, XIE, Weibo, WANG, Quanjiang, KANG, Jianhui, ZHANG, Jilong, ZHAO, Hui, HAO, Lixuan, MAO, Tongqin, CAO, Wenjie, CHAO, Haiying, LI, Jiujiang, ZENG, Xianting, YANG, Shiheng
33: CN 31: 202011014307.9 32: 2020-09-24

54: SINGLE-STAGE CARBON DIOXIDE MULTI-SPLIT COOLING AND HEATING MULTIFUNCTIONAL CENTRAL AIR CONDITIONER

00: -

A single-stage carbon dioxide multi-split cooling and heating multifunctional central air conditioner, comprising a single-stage carbon dioxide circulation system using carbon dioxide as a circulation working medium; the single-stage carbon dioxide circulation system comprises an outdoor unit and a plurality of end heat exchangers (6) provided in parallel; and the carbon dioxide medium performs cooling and/or heating in a circulating manner in a carbon dioxide compressor (1), an outdoor heat exchanger (3), a liquid storage tank (5) and the end heat exchangers (6) which are in communication with one another. By using carbon dioxide as a circulation working medium, said central air conditioner has the advantages of large pressure difference, good flowability and low density, can be used in high-rise buildings, and can perform circulation at a height of 100 meters or more. A hot water supply apparatus is provided on a pipeline at an exhaust end of the carbon dioxide compressor (1), an ice storage device and a floor heating apparatus are connected in series to the pipeline at the exhaust end of the carbon dioxide compressor, and carbon dioxide in said system can also be used for fire fighting and fire

extinguishing, achieving multiple purposes of said central air conditioner.

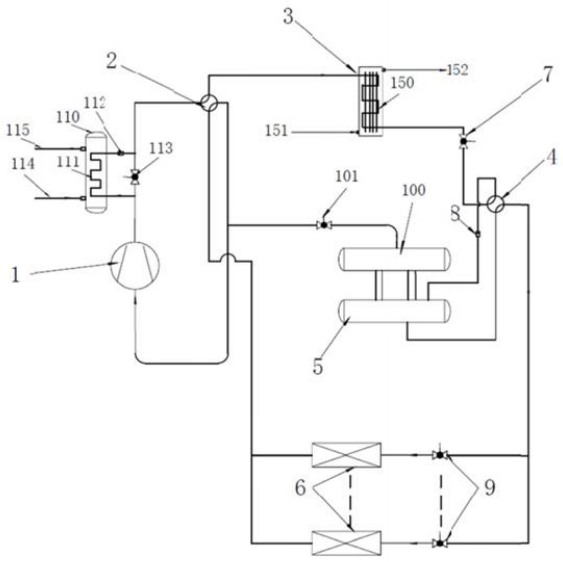

21: 2023/03988. 22: 2023/03/30. 43: 2023/09/27
51: G01C; G06F; G06T; H04L; H04W
71: Value App (Pty) Ltd
72: VAN 'T HOF, Diederik Egbert Joseph
54: FUEL SUPPLY LOCATION SYSTEM
00: -
The invention relates to a fuel supply location system which comprises a plurality of participating location-aware, communications-enabled mobile devices, a system database that includes in-person sourced data pertaining to a plurality of fuel stations and a computer software application. The computer software application comprises a participating user module, a fuel station location module and a fuel pricing module, each comprising computer programs configured for downloading, installation and implementation in the mobile device of a prospective participating user. The fuel station location module is configured to program the mobile device programmable logic means to access geospatial functionality of the mobile device, to enable user-entered criteria pertaining to fuel geospatial data recorded in the system database, to compare the entered criteria with the geospatial data of fuel stations as recorded in the system and to programmatically select and display one or more fuel stations which most closely correspond with the user-entered criteria.

21: 2023/04011. 22: 2023/03/30. 43: 2023/09/27
51: F42D
71: DETNET SOUTH AFRICA (PTY) LTD
72: MULLER, Elmar Lennox, LIEBENBERG, Abraham Johannes
33: ZA 31: 2020/06084 32: 2020-10-01
54: BLASTING SYSTEM
00: -
A blasting system which includes a blast site with a perimeter which surrounds the blast site, a plurality of spaced apart boreholes at the blast site, a plurality of detonator assemblies, each detonator assembly being positioned in a respective borehole, each detonator assembly including a respective receiver which is responsive to a magnetic signal transmitted from a control device and received by the receiver, a plurality of magnetic field strength meters (MFSMs) positioned at spaced apart locations on the perimeter, each MFSM including a respective unique identifier, each MFSM in response to a magnetic signal detected by the MFSM, producing a respective data signal which is dependent on the strength of the detected magnetic signal and which includes said unique identifier, and a communication arrangement for transmitting said data signals from said MFSMs to a data collection point.

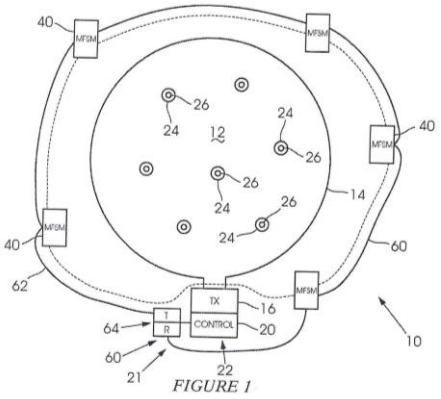

FIGURE 1

21: 2023/04013. 22: 2023/03/30. 43: 2023/08/07
51: F16H; G16Y
71: YAZAKI CORPORATION
72: KOGO, KOSUKE, MANABE, YOHEI, NAKAO, TERUHITO, TANAKA, JUNJI
33: JP 31: 2020-187260 32: 2020-11-10
54: DRIVING MANAGEMENT DEVICE, ON-BOARD UNIT, AND DRIVING MANAGEMENT SYSTEM
00: -

A server (80) is capable of communicating with an on-vehicle device (10) mounted on a vehicle equipped with a transmission capable of switching a plurality of shift stages. The server (80) acquires, from the on-vehicle device (10), vehicle data including a speed of the vehicle and an engine rotation speed, which are recorded at regular intervals during traveling of the vehicle, and stores the vehicle data. The server (80) calculates, based on the vehicle data, a first gear ratio and a second gear ratio, which are gear ratios for each of at least a first shift stage and a second shift stage, which is a shift stage one stage higher than the first shift stage, among the plurality of shift stages, and calculates a maximum engine rotation speed based on an idling rotation speed, the first gear ratio, and the second gear ratio to output the maximum engine rotation speed as a threshold.

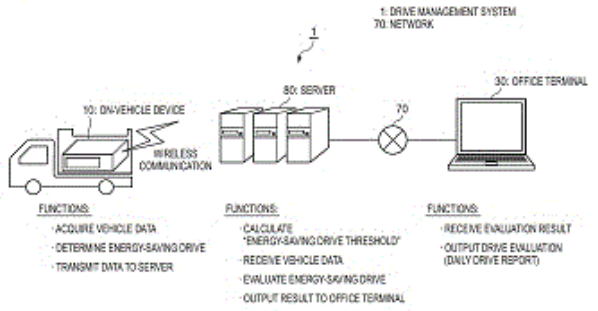

21: 2023/04037. 22: 2023/03/31. 43: 2023/09/27
51: B60L; G05B
71: HUNAN INSTITUTE OF ENGINEERING, HUNAN HUGONG ELECTRIC CO., LTD.
72: XIE Ya, HUANG Zhonghua, WEN Shigui, LIU Wantai
33: CN 31: CN202210395471.1 32: 2022-04-14

54: PERFORMANCE TEST SYSTEM AND EVALUATION METHOD OF SUBWAY TRACTION MOTOR

00: -

The invention relates to the technical field of motor performance test, and discloses a subway traction motor performance test system and an evaluation method, which comprises a main controller, an environmental chamber, and a plurality of temperature controllers, motors to be detected, sensor groups and loaders arranged in the environmental chamber, wherein the motors to be detected are respectively connected with the sensor groups and the loaders, and the loaders are connected with the main controller; the temperature controller is used for working in different working states to adjust the temperature in the environmental chamber; the loader is used for applying a test load to the motor to be detected according to the set power information and sending the power information to the main controller; the sensor group is used for acquiring temperature information and vibration information of the motor to be detected working at different temperatures, and sending the temperature information and the vibration information to the main controller; the invention can simulate the actual working environment of the motor and improve the accuracy of the test result.

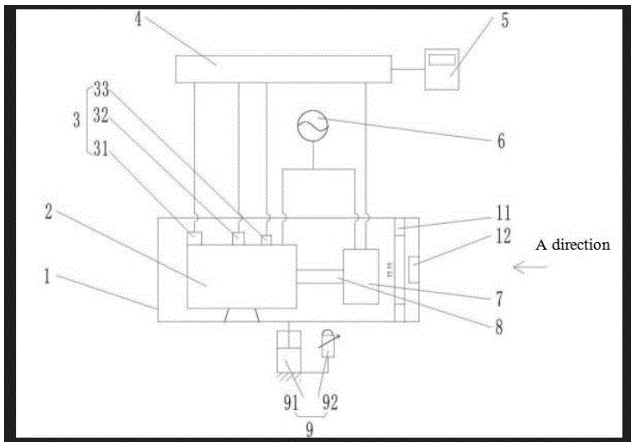

21: 2023/04059. 22: 2023/03/31. 43: 2023/09/27
51: G10L
71: FRAUNHOFER-GESELLSCHAFT ZUR FÖRDERUNG DER ANGEWANDTEN FORSCHUNG E.V.
72: REUTELHUBER, Franz, FUCHS, Guillaume, MULTRUS, Markus, FOTOPOULOU, Eleni, BAYER, Stefan, BÜTHE, Jan, DÖHLA, Stefan
33: EP 31: 20201093.0 32: 2020-10-09
33: EP 31: 20207515.6 32: 2020-11-13
33: EP 31: 21180863.9 32: 2021-06-22

54: APPARATUS, METHOD, OR COMPUTER PROGRAM FOR PROCESSING AN ENCODED AUDIO SCENE USING A PARAMETER CONVERSION

00: -

An apparatus for processing an encoded audio scene (130) representing a sound field related to a virtual listener position, the encoded audio scene comprising information on a transport signal (122) and a first set of parameters (112) related to the virtual listener position comprises a parameter converter (110) for converting the first set of

parameters (112) into a second set of parameters (114) related to a channel representation comprising two or more channels for a reproduction at predefined spatial positions for the two or more channels, and an output interface (120) for generating a processed audio scene (124) using the second set of parameters and the information on the transport signal (122).

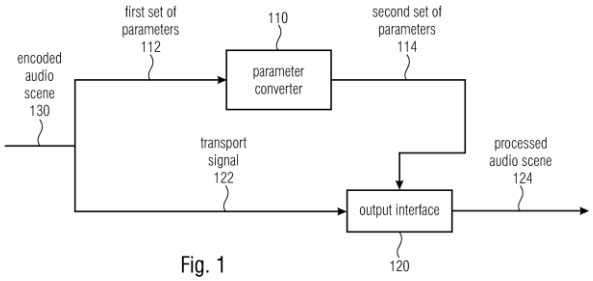

Fig. 1

21: 2023/04089. 22: 2023/04/03. 43: 2023/10/12
51: A61K; A61P
71: QIQIHAR MEDICAL UNIVERSITY
72: CUI Hongxia, YANG Jing, SONG Xu, BU Ming, WANG Jiafeng, WU Jiale, ZHANG Haotian, LIU Xinyang, WANG Zengxin
33: CN 31: 2022104985543 32: 2022-05-09

54: LUPEOL COUPLED TRIPHENYLPHOSPHINE DERIVATIVE AND ITS PREPARATION AND APPLICATION

00: -

Disclosed are a lupeol coupled triphenylphosphine derivative and its preparation and application, and related to the technical field of medicine. According to the invention, lupeol is used as a raw material, and an aliphatic straight chain containing bromine atoms is introduced by taking its C-3 hydroxyl group as a connection point through esterification reaction to synthesize an intermediate compound; then, the intermediate compound and triphenylphosphine are carried out salt formation to obtain the target product lupeol coupled triphenylphosphine derivative. The lupine alcohol coupled triphenylphosphine derivative of the invention has good biological activity for the growth of human liver cancer HepG-2, human lung cancer A549, human breast cancer MCF-7 and MDA-MB-231 cells, and has the potential to be developed as a new anti-tumor drug.

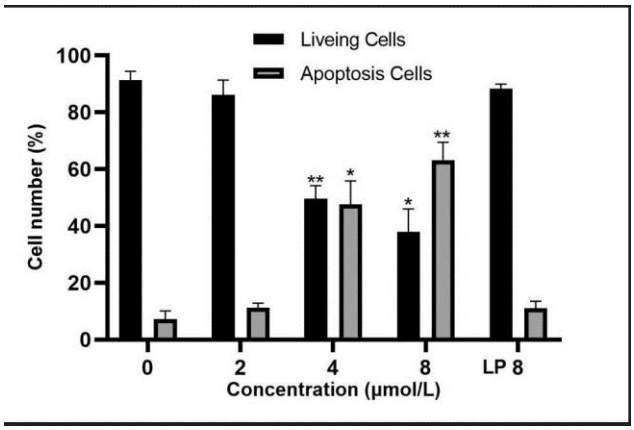

21: 2023/04090. 22: 2023/04/03. 43: 2023/10/12
51: A61K; A61P
71: QIQIHAR MEDICAL UNIVERSITY
72: WANG Yuting, WANG Yuchun, GAO Wei, QI Zhanpeng, GUO Tongjie, DUAN Hongye, LIU Jicheng
33: CN 31: 2022108138917 32: 2022-07-12

54: APPLICATION OF BMP4 AS TARGET IN PREPARING DRUG FOR TREATING DIABETIC CARDIOMYOPATHY

00: -

The invention discloses an application of BMP4 as a target in preparing a drug for treating diabetic cardiomyopathy, and belongs to the technical field of biomedicine. The invention discloses an application of BMP4 as a target in preparing a drug for treating diabetic cardiomyopathy, and plays a role in treating diabetic cardiomyopathy by inhibiting the expression level of BMP4. According to the invention, a new role of BMP4 in diabetic cardiomyopathy is discovered for the first time, the results show that the expression of BMP4 is increased in diabetic model animals, and the increased BMP4 protein can induce cardiomyocyte injury and hypertrophy, thus revealing that it may be used as a therapeutic target of diabetic cardiomyopathy; and experiments show that BMPs receptor inhibitors can reverse cardiomyocyte injury and hypertrophy induced by high glucose, and inhibit myocardial injury and hypertrophy in db/db mice, indicating that drugs for inhibiting the expression of BMP4 can be used for the treatment of diabetic cardiomyopathy.

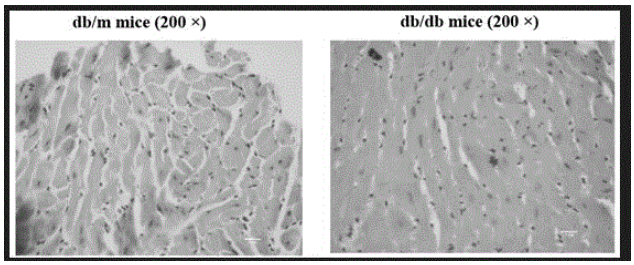

21: 2023/04091. 22: 2023/04/03. 43: 2023/10/12
51: G01N
71: WEST ANHUI UNIVERSITY
72: ZHAO Minfu, WAN Neng, ZHANG Bo, ZHAO Jiangdong, HU Xunmei, SUN Pengjiao, SUN Yaxin, LI Shuo, ZHENG Jianwen, WEI Xiangchun
33: CN 31: CN202310195973.4 32: 2023-02-28
54: MEASURING INSTRUMENT AND METHOD FOR THERMAL CONDUCTIVITY OF ICE
00: -
The invention belongs to the technical field of manufacturing and application of measuring instruments, in particular to an ice thermal conductivity measuring instrument and a method thereof. The measuring instrument comprises an incubator, wherein the top end of the incubator is detachably connected with a insulation cover; a semiconductor cooling structure is fixedly connected in the incubator; the semiconductor cooling structure is communicated with a cooling structure outside the incubator through a cooling pipe; a semiconductor cooling structure is fixedly connected with the top end of the semiconductor cooling structure; and a copper disk temperature measuring structure is placed at the top end of the semiconductor cooling structure; the inner wall of the incubator is fixedly connected with a box temperature measuring probe and an electric fan. The use method comprises the steps of preparing the test sample ice, creating a low-temperature environment, measuring experimental materials, installing an experimental device, starting to measure and obtaining experimental results. By using these structures and methods, the invention realizes an ice thermal conductivity tester and method which can stably measure the thermal conductivity of ice and improve the experimental accuracy.

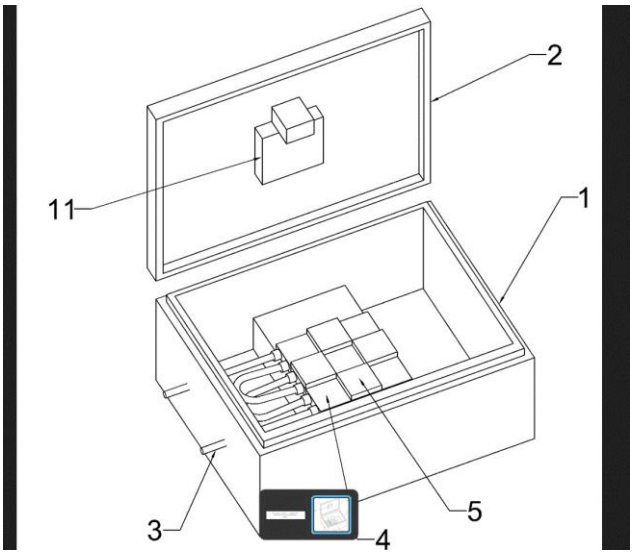

21: 2023/04119. 22: 2023/04/04. 43: 2023/10/12
51: G05B
71: YANG, Chang
72: YANG, Chang
54: SMART HOME MANAGEMENT SYSTEM BASED ON INTERNET OF THINGS
00: -
Disclosed is a smart home management system based on the Internet of things. The system controls home devices in a smart home environment according to indoor environmental parameters and determines whether there is a risk of theft in the smart home environment according to a surveillance video at a doorway and a running signal of a smart lock. The system is capable of pre-warning the act of theft in the home environment.

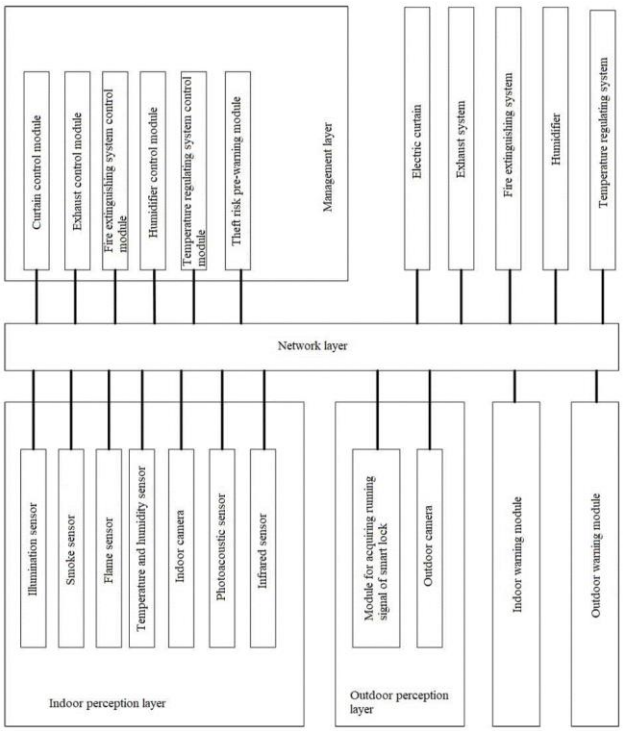

21: 2023/04120. 22: 2023/04/04. 43: 2023/10/12
51: C12H
71: Leshan Normal University
72: CHEN, Qiao, TIAN, Chong, WEN, Zhiguo, SUN, Guofeng, CHEN, Fengzheng

54: AUTOMATIC DISTILLATION HEAD FOR DISTILLATION

00: -

Disclosed is an automatic distillation head for distillation. A still head is connected to a top cap through a hoop, a cock is arranged in the still head, the upper part of the cock penetrates through the top cap and is connected to a power module, and the power module is electrically connected to a control module. One solution is as follows: an air outlet of the top cap communicated with the interior of the top cap is arranged in one side of the top cap, and a condenser pipe is arranged on the upper part of the air outlet of the top cap. The other solution is as follows: an ingress pipe communicated with the middle part of a liquid storage pipe is arranged on the side wall of the top cap, and the top of the liquid storage pipe is communicated with the condenser pipe.

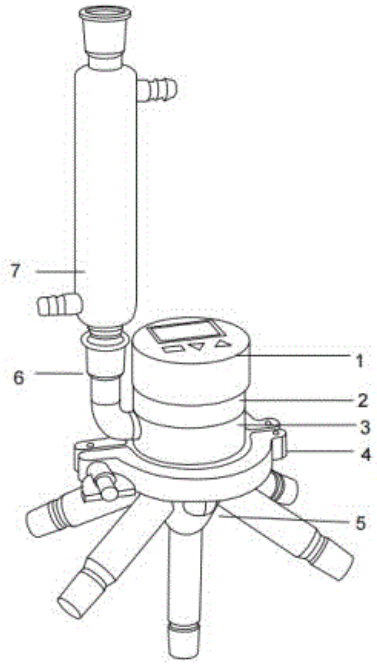

21: 2023/04122. 22: 2023/04/04. 43: 2023/10/12
51: G01R
71: XINJIANG UNIVERSITY
72: PAZILAI Mahemuti, JIA Hailong, ZHANG Xinyang, PENG Dongmei, YUAN Hang, WANG Fang, ZHANG Baowei, LIU Wenhong

54: PARAMETRIC FAULT DIAGNOSIS METHOD FOR MULTI-LEVEL INVERTER BASED ON BOND GRAPH MODELING

00: -

The invention discloses a parametric fault diagnosis method for multi-level inverter based on bond graph modeling, which comprises the following steps: firstly, building a system bond graph model and a diagnostic bond graph model, and adding a coefficient factor describing mode change on the basis of ARRs, thereby obtaining a global analytic redundancy relation (GARR) with mode information and parameter information; The fault feature matrix (FSM), which reflects the relationship between faults and residuals, is derived by this method, so as to extract fault features. Then the 20-sim simulation platform is used to simulate the normal operation and fault of the flying capacitor three-level inverter. Through simulation analysis, it can be concluded that this method can only detect the fault but not isolate it. Finally, the method of parameter identification is combined to locate the non-isolated faults, so as to realize more accurate fault diagnosis.

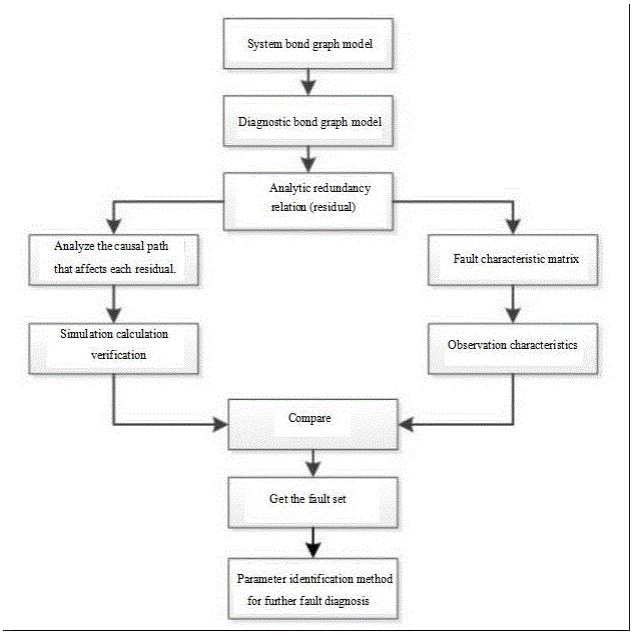

21: 2023/04123. 22: 2023/04/04. 43: 2023/10/12
51: A61H
71: NINGBO KANGNING HOSPITAL (NINGBO CENTER FOR MENTAL DISEASE PREVENTION AND CONTROL)
72: LI Xingxing, ZHOU Dongsheng, ZHUANG Wenhao, YU Chang
54: FREQUENCY-ADJUSTABLE ACOUSTO-OPTIC ELECTROMAGNETIC STIMULATION DEVICE FOR ANIMAL EXPERIMENTS
00: -
The invention provides a frequency-adjustable acousto-optic electromagnetic stimulation device for animal experiments, which comprises an L-shaped frame and a transparent cover; the L-shaped frame includes a transverse frame and a vertical frame; a movable disc is arranged on the transverse frame, and a back cover is arranged behind the vertical frame; one side of the transverse frame is provided with a power supply component; an electrical stimulation component is also arranged in the transverse frame; a control module is arranged in the vertical frame; an acoustic wave stimulation component is arranged above the control module; one side of the vertical frame is provided with a light stimulation component and a magnetic stimulation component; an operation module is arranged in the back cover; the transparent cover includes a movable window. The invention adopts an L-shaped frame and a transparent cover which are connected with each other, which is convenient for observation; the L-shaped frame is internally provided with an electric stimulation component, an acoustic wave stimulation component, a light stimulation component and a magnetic stimulation component controlled by a control module, and the parameters can be adjusted by an operation module; the movable disc is easy to clean; through the above design, it is convenient for long-term experiments, collecting a large number of data, and further exploring the best therapeutic effect of combined stimulation of sound, light, electricity and magnetism, as well as the influence brought by long-term stimulation.

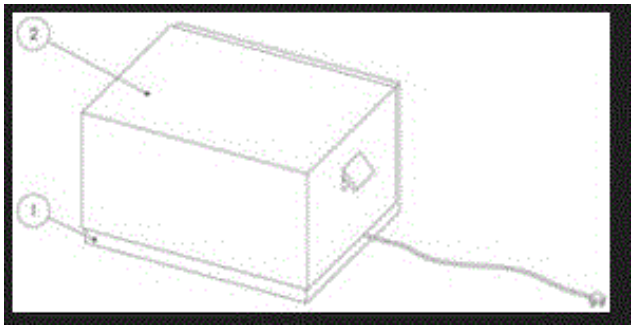

21: 2023/04141. 22: 2023/04/04. 43: 2023/10/09
51: E02D
71: CHINA RAILWAY 19TH BUREAU GROUP THIRD ENGINEERING CO., LTD., CHINA RAILWAY 19 BUREAU GROUP CO., LTD.
72: ZHAO, Licai
33: CN 31: 202110581511.7 32: 2021-05-27
54: RETAINING WALL STRUCTURE USING CORRUGATED PLATES AND CONSTRUCTION METHOD THEREFOR
00: -
A retaining wall structure using corrugated plates and a construction method therefor, said structure comprising: a vertically disposed corrugated plate (3), a first prefabricated foundation (1), and a second prefabricated foundation (2). The first prefabricated foundation (1) and the second prefabricated foundation (2) are an integrated structure, a connecting part (4) is provided between the first prefabricated foundation (1) and the corrugated plate (3), a cast-in-situ limiting part (5) is disposed between the other side of the corrugated plate (3) and the second prefabricated foundation (2), and a counterweight part (6) is disposed on the side of the corrugated plate (3) distant from the first prefabricated foundation (1). With the combination of

the connecting part (4), the counterweight part (6) and the limiting part (5), the retaining wall structure can achieve the effective fixation of the corrugated plate (3), and the construction process is simple and efficient.

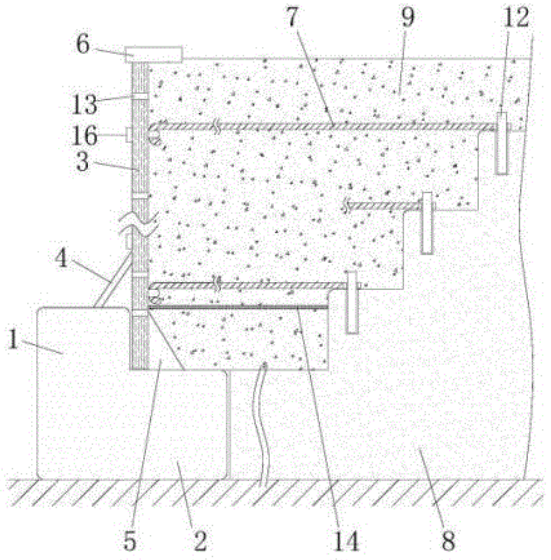

21: 2023/04152. 22: 2023/04/04. 43: 2023/10/12
51: A47J
71: SHAKACAN IP B.V
72: NICHOLLS, Richard John, NICHOLLS, Andrew Bryce, VAN LEEUWEN, Erwin Christiaan, PRUISSCHER, Sebastiaan, KAAN, Wouter Jan, RESOORT, Mike
33: NL 31: 2026556 32: 2020-09-28
54: CAP ASSEMBLY FOR A BEVERAGE CONTAINER
00: -
A shaker top (202) and beverage container (200) are provided, which may together form a cocktail shaker. The shaker top (202) comprising an interface part (204) arranged to be liquid-tightly connected to the beverage container (200), the interface part (200) comprising an interface body (206) and a radial clamping module for radially engaging the beverage container (200). The beverage container (200) may be filled with a substantially non-carbonated beverage, for example up to 90 percent of the total volume of the beverage container (200).

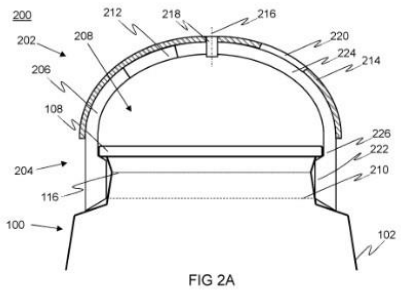

FIG 2A

21: 2023/04162. 22: 2023/04/05. 43: 2023/10/12
51: B01J; C10G
71: CHINA PETROLEUM & CHEMICAL CORPORATION, SHANGHAI RESEARCH INSTITUTE OF PETROCHEMICAL TECHNOLOGY, SINOPEC
72: ZONG, Hongyuan, LI, Xiaohong, QI, Guozhen, JIN, Yongming, GAO, Pan, WANG, Yanxue
33: CN 31: 202010968050.4 32: 2020-09-15
54: CATALYST MIXING DEVICE
00: -
The present invention provides a mixing device for at least two particulate materials, comprising a first riser used for loading first particles and a second riser surrounding and coaxial with the riser and used for loading second particles, the upper part of the first riser extending beyond the top of the second riser, and at least a part of the upper part of the first riser and at least a part of the upper part of the second riser being located inside a mixing zone container, such that the first and second particles are delivered to the inside of the mixing zone container by means of the first and second risers respectively and mixed.

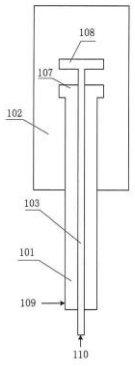

21: 2023/04166. 22: 2023/04/05. 43: 2023/10/12
51: C07C
71: CHINA PETROLEUM & CHEMICAL CORPORATION, SHANGHAI RESEARCH

INSTITUTE OF PETROCHEMICAL TECHNOLOGY, SINOPEC
72: ZONG, Hongyuan, LI, Xiaohong, QI, Guozhen, WANG, Hongtao, YU, Zhinan, ZHENG, Yijun, WANG, Li
33: CN 31: 202010968050.4 32: 2020-09-15
54: METHOD FOR PREPARING ETHYLENE PROPYLENE
00: -
The present invention provides a device for mixing at least two granular materials, comprising a first lifting tube used for loading first particles, and a second lifting tube surrounding and coaxial to the first lifting tube and used for loading second particles, the upper part of said first lifting tube extending beyond the top of said second lifting tube, and at least part of said upper part of the first lifting tube and at least part of said upper part of the second lift tube being located inside a fast bed precipitator, allowing the first and second particles to be transported by means of the first and second lifting tubes to the interior of said fast bed precipitator and mixed.

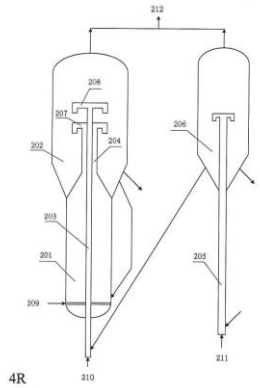

21: 2023/04167. 22: 2023/04/05. 43: 2023/10/12
51: A61K; C07K; C12N; C12P; A61P
71: SHANGHAI HENLIUS BIOTECH, INC., SHANGHAI HENLIUS BIOPHARMACEUTICAL CO., LTD., SHANGHAI HENLIUS BIOLOGICS CO., LTD.
72: WANG, Jiin-Tarng, TSENG, Chi-Ling, JIANG, Wei-Dong
33: WO 31: PCT/CN2020/118320 32: 2020-09-28
54: ANTI-CD47 ANTIBODIES AND METHODS OF USE
00: -
Provided are antibodies and antibody derivatives that bind to CD47 (also known as IAP, MER6 and OA3) and methods of using the same. In certain embodiments, an anti-CD47 antibody or antibody derivative disclosed herein exhibits reduced binding to a red blood cell.

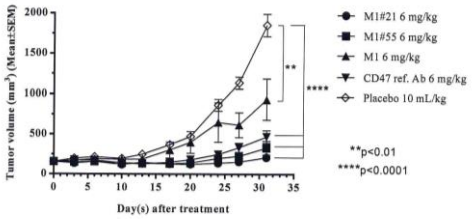

21: 2023/04197. 22: 2023/04/06. 43: 2023/10/12
51: D21H; D21J
71: CHINA NATIONAL PULP AND PAPER RESEARCH INSTITUTE CO., LTD.
72: ZHANG, Xue, ZHANG, Hongjie, CHENG, Yun
33: CN 31: 2022106793711 32: 2022-06-14
54: PREPARATION METHOD OF SELF-CLEANING SUPER-HYDROPHOBIC PULP MOLDING MATERIAL
00: -
The present disclosure provides a preparation method of a self-cleaning super-hydrophobic pulp molding material. The preparation method includes the following specific steps: preparing a sodium carbonate solution and a calcium chloride solution; putting the sodium carbonate solution, pulp fibers and the calcium chloride solution into a medium-speed mixer successively to react for a period of time; washing a pulp fiber suspension, and then preparing pulp fibers with precipitated calcium carbonate adsorbed; preparing a pulp fiber mixture into the pulp fiber suspension, and making the pulp molding material by a rapid paper sheet forming technology; and coating a prepared self-cleaning super-hydrophobic modified mixed solution onto the pulp molding material, and then placing the pulp molding material in an oven for non-contact drying. A technological formula in the present disclosure does not contain silicon-fluorine compounds, and is green and environmental-friendly.

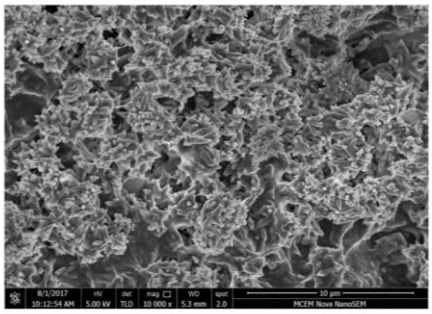

21: 2023/04198. 22: 2023/04/06. 43: 2023/10/12
51: A23K; C07K; C12N
71: Yellow Sea Fisheries Research Institute, Chinese Academy of Fishery Sciences
72: XU, Wenteng, CUI, Zhongkai, SUN, Yuxuan, CHEN, Yadong, XU, Xiaodong, LI, Wenlong
33: CN 31: 2022111094929 32: 2022-09-13

54: EXPRESSION AND APPLICATION OF FEMALE-SPECIFIC PROTEIN OF CYNOGLOSSUS SEMILAEVIS

00: -

The present invention discloses a use of pitpbeta_w (a variant of phosphatidylinositol transfer protein (pitp)) in regulating the expression of a growth-related gene and a sex-differentiation-related gene of male Cynoglossus semilaevis. The present invention, by utilizing pitpbeta_w, successfully regulates the growth-related gene and sex-differentiation-related gene of male fish, which provides a good basis for studying expression patterns and phenotypes of related genes, as well as the growth and differentiation of male fish, and has broad application prospects.

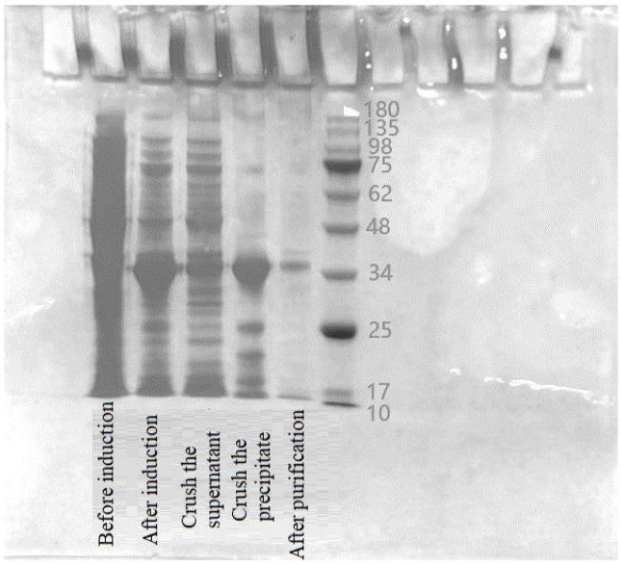

21: 2023/04202. 22: 2023/04/06. 43: 2023/10/12
51: G06T; G06N
71: TAIYUAN UNIVERSITY OF TECHNOLOGY, Nankai University, Shanxi Cancer Hospital
72: ZHANG, Yan, ZHANG, Xueying, WANG, Suzhe, WANG, Weili, LI, Fenglian, CHEN, Guijun, HUANG, Lixia, ZHANG, Hongtao, GAO, Yanzhe
33: CN 31: 202210956937.0 32: 2022-08-10

54: METHOD AND SYSTEM FOR PARTITIONING LESION IMAGING DATA

00: -

Disclosed are a method and system for partitioning lesion imaging data, which relate to the technical field of image data processing. The method includes: acquiring target MRI data; performing feature extraction of the target MRI data to obtain a lesion feature, where the lesion feature includes a two-dimensional lesion feature and a three-dimensional lesion feature; and determining the lesion imaging data according to the lesion feature and a lesion segmentation model, where the lesion segmentation model includes a dual-channel attention mechanism convolution fusion encoding module and a residual-attention gate hybrid decoding module that are sequentially connected. The present invention can improve an accuracy of segmenting a lesion area in MRI.

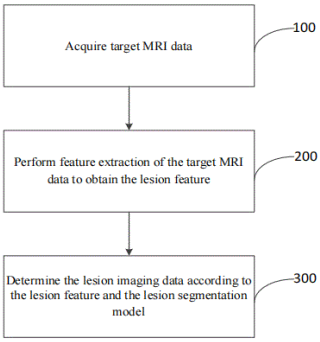

21: 2023/04204. 22: 2023/04/06. 43: 2023/10/12
51: E03F
71: CHINA RAILWAY CONSTRUCTION GROUP CO., LTD.
72: ZHAO Yaming, WANG Wei, WANG Pan, WU Yahui, WANG Chao, TIAN Junying, GU Hongyin, GENG Mingming, GOU Yibo, WANG Shengzhao, XI Yichao, GUO Yifei, LIU Kailei, MENG Ruoyu, ZHANG Mingfei

54: DRAINAGE ANTI-PRESSURE ANTI-FLOATING METHOD AND SYSTEM FOR AIRPORT UNDERGROUND SPACE

00: -

The invention discloses a drainage anti-pressure anti-floating method and system for airport underground space, which comprises the following steps: S1, acquiring geographic data of a preset area; S2, inputting the geographic data into a hydrodynamic analysis model used for drainage anti-pressure anti-floating, and carrying out simulation analysis to obtain a hydrological result of a drainage pipe network corresponding to the preset area; and S3, determining the plane layout scheme, the buried depth and the pipe diameter of the drainage pipe network in the underground space of the airport according to the hydrological results of the drainage pipe network. The technical scheme of the invention is adopted to solve the problems that the accuracy and precision of the analysis result of the drainage pipe network hydrodynamic model in the prior art are not high, and a lot of manpower and material resources are consumed.

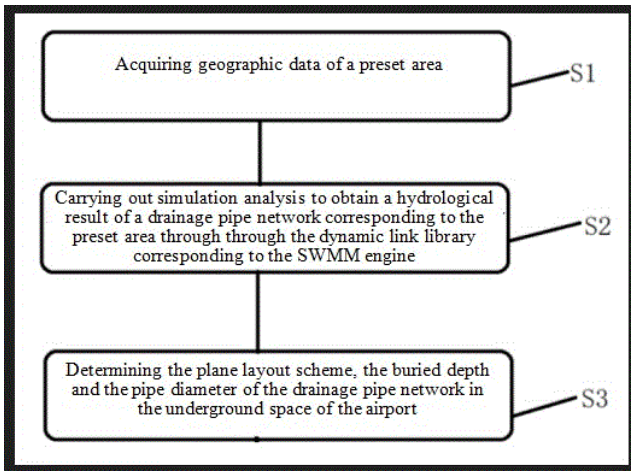

21: 2023/04205. 22: 2023/04/06. 43: 2023/10/12
51: C08G; H01G
71: SOOCHOW MOFS SCIENCE AND TECHNOLOGY LTD.
72: LI Zuoxi, LI Hui, ZHANG Liying
33: CN 31: 2023101749384 32: 2023-02-28

54: MOF-DERIVED HIGH-POROSITY CARBON AEROGELS AND APPLICATION IN SUPERCAPACITORS

00: -

The invention relates to the technical field of supercapacitors, in particular to a MOF-derived high-porosity carbon aerogels and its application in supercapacitors. The MOFs-derived high-porosity carbon aerogel is obtained by calcining and pyrolyzing MOF-ZX-5 material; the MOF-ZX-5 material is [Zn(tppa)2Cl2]. According to the invention, a novel MOF-ZX-5 is used as a precursor, and a novel carbon aerogels material (MOFs-derived high-porosity carbon aerogels) is designed and synthesized as an electrode material of a supercapacitor; and the MOFs-derived high-porosity carbon aerogels-ZX-5 has the characteristics of high porosity, large specific surface area and excellent capacitance performance, and is used as an electrode material of a supercapacitor, and has the characteristics of high specific capacitance, power density and energy density, fast charge-discharge rate and good cycle stability.

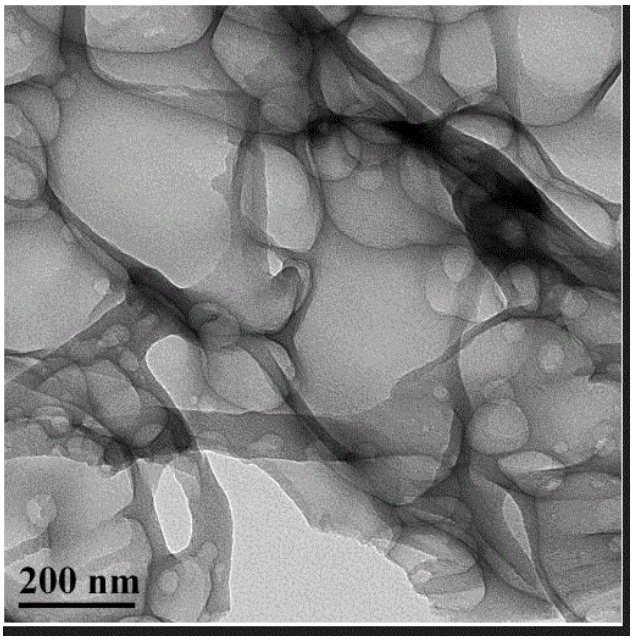

21: 2023/04206. 22: 2023/04/06. 43: 2023/10/12
51: A61M
71: THE FIRST AFFILIATED HOSPITAL OF BENGBU MEDICAL COLLEGE
72: DONG Huaifu, YANG Xiaoyun, YANG Mei, DONG Xiaoyu, LI Baoguang, ZHANG Ying
54: PEDIATRIC NEGATIVE PRESSURE GASTRIC LAVAGE DEVICE FOR PEDIATRICIANS
00: -
The invention discloses a pediatric negative pressure gastric lavage device for pediatricians, which comprises a chassis and an embedding block arranged at the top of the chassis; a stomach tube is embedded in the embedding block; one end of the gastric tube is provided with a gastric lavage head; three flow channels are arranged in the stomach tube; the three flow channels are respectively connected with the air inlet pipe, the liquid inlet pipe and the liquid discharge pipe in the chassis through connectors; a medicine box, a first air pump, a second air pump, a first circulating pump and a second circulating pump are arranged in the inner cavity of the chassis; the first circulating pump is communicated with the drainage pipe through a three-way valve; the drainage pipe also extends into the medicine box. The device is easy to move, and with the addition of the liquid flowmeter, the flow velocity during liquid discharge can be monitored to ensure the pressure value of negative pressure in the stomach and avoid the damage of internal organs; at the same time, the invention adopts automatic control to reduce the working difficulty of operators.

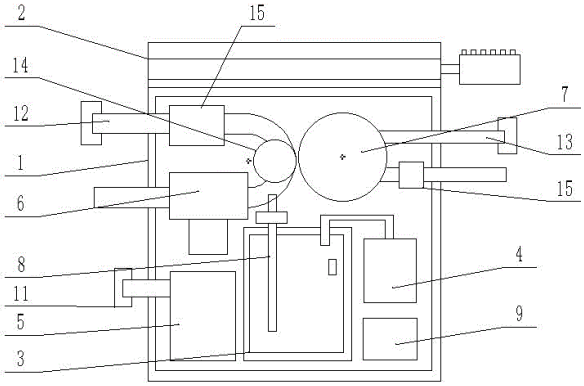

21: 2023/04244. 22: 2023/04/06. 43: 2023/10/12
51: B02C
71: CBSM MINING SERVICES PTY LTD
72: Christopher KELSEY
33: AU 31: 2020903268 32: 2020-09-11
54: GYRATORY ROLLER CRUSHER
00: -
A gyratory roller crusher in which the rollers have a corrugated profile and at least one of the rollers is eccentrically mounted to give a relative gyratory motion to the rollers resulting in additional breakage mechanisms for the comminution of a very wide range of feed material, vastly improved crushing ratios and increased throughput compared with conventional roller crushers.

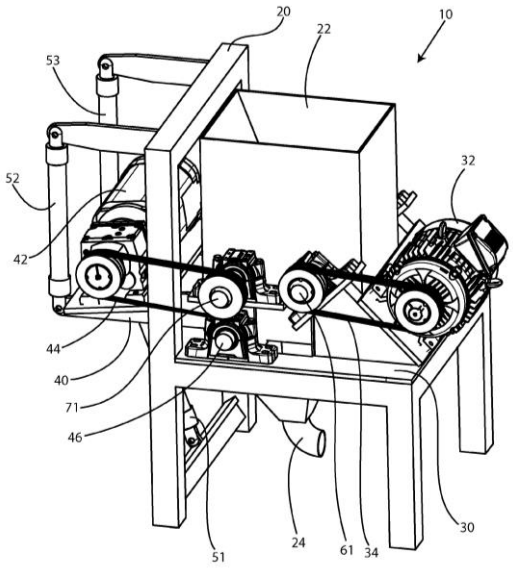

21: 2023/04265. 22: 2023/04/11. 43: 2023/10/13
51: C10B
71: Kunming University of Science and Technology
72: ZHAO, Qun, LI, Jie, ZHAO, Yihuang, TIAN, Senlin, PAN, Yi, CUI, Xiangfen, HUANG, Jianhong, NING, Ping, LI, Yingjie, HU, Xuewei
33: CN 31: 2022109656716 32: 2022-08-12
54: TREATMENT METHOD AND TREATMENT DEVICE FOR REMEDIATING CONTAMINATED SOIL BY PYROLYSIS AND CARBONIZATION OF BIOMASS
00: -
The present invention discloses a treatment method for remediating contaminated soil by pyrolysis and carbonization of biomass, including steps of preparation, preheating, pyrolysis, heat exchange, discharging and remediation. The present invention discloses a treatment device that realizes the treatment method, including a charging device, an airtight preheater, an airtight pyrolyzer, an airtight an air-cooled discharger and a pyrolysis gas burner. By mixing and carbonizing mining waste and biomass, after treatment, the fertility and pH value of the mining waste can be improved effectively, and physical weathering and chemical weathering of the mining waste are accelerated. The content of metal sulfides in the mining waste is reduced through thermolysis, so extraction of the mining waste is improved. The pyrolyzed mixture of the waste and the biomass can be used for remediating contaminated soil.

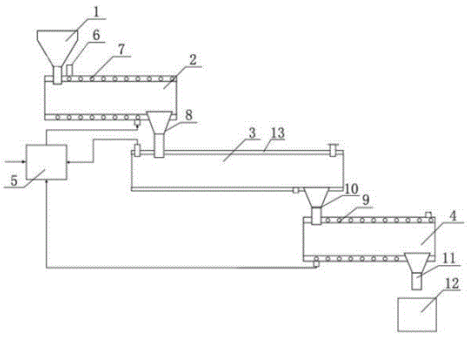

21: 2023/04266. 22: 2023/04/11. 43: 2023/10/13
51: G01N
71: Institute of Water Resources for Pastoral Area, MWR
72: WU, Yingjie, WANG, Wenjun, ZHOU, Quancheng, YIN, Hang, QUAN, Qiang, LI, Wei, ZHAO, Shuixia, CHEN, Xiaojun, ZHANG, Weijie, SUN, Lixin, ZHAO, Qian, CHEN, Zexun
33: CN 31: 2022105246962 32: 2022-05-13
54: SOIL DETECTION DEVICE FOR GENERAL SURVEY OF DROUGHT DISASTERS
00: -
Disclosed is a soil detection device for general survey of drought disasters, including a drill bit, a detection cylinder is arranged on the top of the drill bit, a soil detection mechanism is arranged in the detection cylinder, a mounting opening is formed on the detection cylinder, baffles are symmetrically arranged at the mounting opening, one ends of the baffles are rotationally connected to the side wall of the mounting opening, and the soil detection mechanism is located at a location on the inner sides of the baffles; and a driving shaft is arranged on the top of the detection cylinder, and configured to drive the drill bit and the detection cylinder to extend into soil. a tedious operation of taking out the soil to detect is avoided, and the soil detection mechanism is prevented from being damaged when the drill bit extends into the soil.

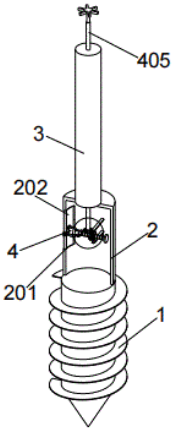

21: 2023/04267. 22: 2023/04/11. 43: 2023/10/13
51: E01C
71: Nanjing Vocational Institute of Railway Technology
72: ZHONG Zhipeng, HAN Yikang, FENG Honggao
33: CN 31: 202310188445.6 32: 2023-03-01
54: AN ADAPTIVE CONTROL DEVICE FOR LIFTING A BRIDGE-SUBGRADE APPROACH SLAB
00: -
Provided is an adaptive control device for lifting a bridge-subgrade approach slab, comprises a joint approach slab, an X-shaped support device, pull cords, bolts and a protective box, the X-support device is disposed in the middle of the inner cavity of the protective box; the upper and lower rod ends of

the support rods are connected to sliders, the joint approach slab and the inner bottom of the protective box are provided with corresponding chutes, the sliders at the upper rod ends of the support rods and the sliders at the lower rod ends of the support rods are positioned within the chutes of the joint approach slab and the bottom of the protective box respectively; one end of the pull cord is attached to the upper portion of the support rod, the other end of the pull cord is attached to the bolt, the joint approach slab is provided with pull cord holes, the pull cords go into the pull cord holes. The disclosure realizes the elevation adjustability of the approach slab by adjusting and controlling the opening or closing of the X-shaped support device, improving the adaptive ability to the sinking deformation of the foundation, ensuring the smooth transition of the connection between the approach slab and the pavement, avoiding the vehicle bumping at the bridge head, providing the advantages of long overall service life, high safety, small deformation, adaptive adjustability of height differences, less construction materials, and ease of construction and maintenance.

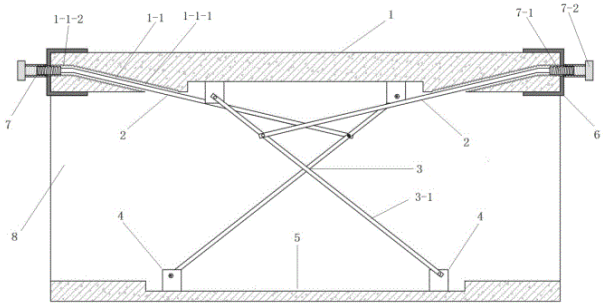

21: 2023/04268. 22: 2023/04/11. 43: 2023/10/13
51: A01C
71: Lingnan Normal University
72: Qichao LI

54: A CONVENIENT OPERATE INVERSE ROTATING STRAIGHT SLOT WHEEL FERTILIZER APPARATUS

00: -

The present invention discloses a convenient operate inverse rotating straight slot wheel fertilizer apparatus, comprising a housing assembly and a double channel fertilizer discharge box provided on the housing assembly; a front chamber is provided on the left side of the interior of the housing assembly; and a rear chamber is provided on the right side of the interior of the housing assembly. The invention adopts the above-mentioned kind of convenient operate inverse rotating straight slot wheel fertilizer apparatus, which can adapt to the layered, quantitative and deep fertilizer application operation during the mechanized fertilizer application and seeding operation of various crops, occupies little space in the machine configuration, is easy to install and adjust, and has the characteristics of simple structure, low manufacturing cost, reliable fertilizer application and good operation quality.

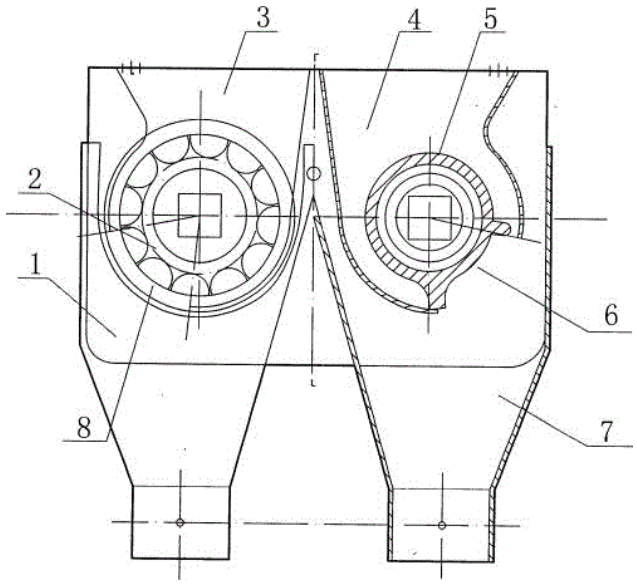

21: 2023/04269. 22: 2023/04/11. 43: 2023/10/13
51: C05G
71: Anhui Science And Technology University
72: Lu xiaomin, Zhang Yu, He keqin, Wang hong, Yang dekun, Wang Xihua
33: CN 31: 2023101420606 32: 2023-02-13

54: BIOLOGICAL FERTILIZER FOR VEGETABLES AND PREPARATION METHOD THEREOF

00: -

The invention belongs to the technical field of biological fertilizers, in particular to a biological fertilizer for vegetables and its preparation method. The biological fertilizer comprises a main material, an auxiliary material and a fermented material; the mass ratio of that main material, the auxiliary material and the fermented material is 1: 0.8-1.5: 0.1-0.6; the main ingredients include sand crabs and post-meal garbage; the fermentation material is one

or more of CM bacteria, brown sugar and yeast mixture; the auxiliary materials include one or more of corn flour, soybean flour, bean cake, wheat flour and vegetable cake. The invention can effectively improve the vegetable planting yield, accelerate the growth speed of vegetables, reduce the vegetable mortality rate, realize waste utilization and reduce pollution, additionally, it has the advantages of low preparation cost, simple and convenient preparation process and convenient popularization.

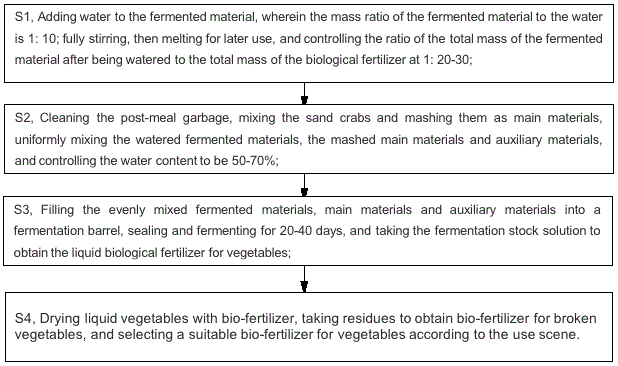

21: 2023/04270. 22: 2023/04/11. 43: 2023/10/13
51: A01G
71: Anhui Science And Technology University
72: Lu xiaomin, Zhang Yu, He keqin, Yang dekun, Xia keming
33: CN 31: 202310142049X 32: 2023-02-13
54: HYDROPONIC VEGETABLE PLAN DEVICE AND PLANTING METHOD THEREOF
00: -
The invention belongs to the technical field of vegetable planting, in particular to a hydroponic vegetable planting device and planting method thereof. Triangular brackets are symmetrically and fixedly connected on both sides of the upper surface of the bottom box; one side close to the triangular bracket in the bottom box is rotatably connected with two first driven shafts; one side of that triangular bracket close to the top plate is slidably connected with a second driven shaft on the lower surface of the top plate through an open chute; the two sides of the top plate close to the triangular bracket are rotatably connected with a driving shaft; the surfaces of the three driven shafts on the same side are wound with belts together; one side of the lower surface of the top plate is provided with uniformly arranged spray head; the low surface of that top plate is provided with a supplementary light, and the move speed of the belt and the planting box is controlled by a spray head, thus, realizing intermittent movement of hydroponic vegetable in the planting box in order for illumination, it also realizes the intermittent water supply to vegetable leaves, and it has high space utilization rate, and has a simple process of planting and harvesting.

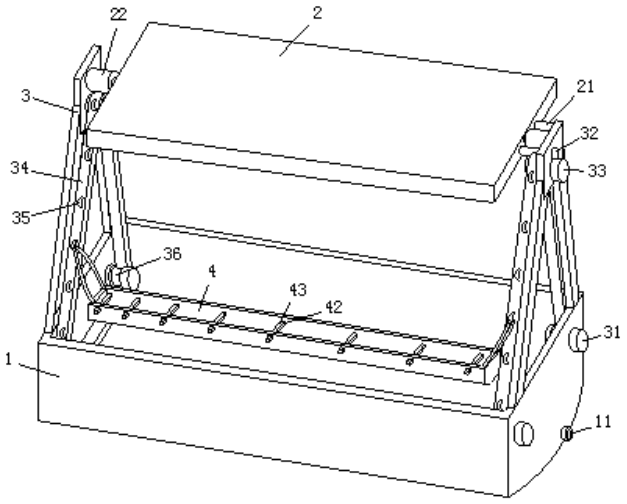

21: 2023/04275. 22: 2023/04/11. 43: 2023/10/13
51: G01M
71: China University of Mining and Technology
72: Aimin LI, Mingzhuang WU, Fei CHEN, Nannan WU, Guanzhong SUN
54: A SIMULATED TUNNEL AND CONCRETE JET PRESSURE TEST DEVICE
00: -
The invention discloses a simulated tunnel and concrete jet pressure test device, including a simulated tunnel and a concrete jet pressure test mechanism. The simulated tunnel includes a building body one and a building body two, and the building body one and the building body two are staggered. The section and side of the simulated tunnel are poured with concrete, and the bottom of the simulated tunnel is connected to the ground through a fixed plate. The concrete injection pressure test mechanism includes a sensor mounting plate. The sensor mounting plate is set on the simulated tunnel. Several pressure sensors are evenly set on the sensor mounting plate. The pressure sensor is connected with the data acquisition card, and the data acquisition card is connected with the host computer. The invention adopts the simulated tunnel and concrete injection pressure test device of the above structure, which can simulate the actual tunnel working condition on

site, and obtain various experimental data of concrete injection strike in real time, so as to provide support for improving the quality of concrete injection and reducing the rebound rate.

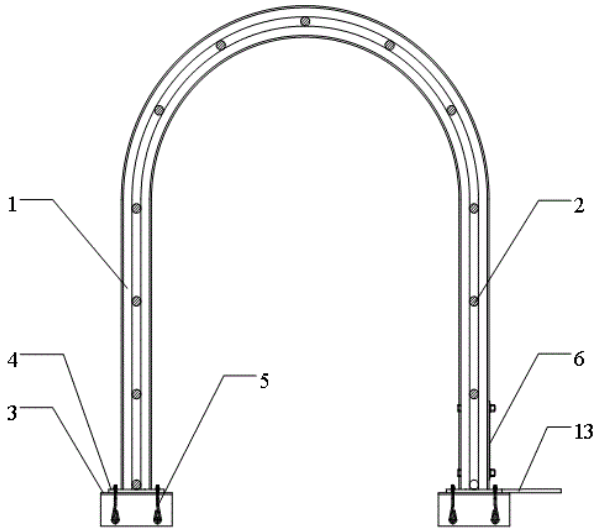

21: 2023/04277. 22: 2023/04/11. 43: 2023/10/13
51: A01N; A01P
71: Shandong Shouguang Vegetable Industry Group Co., Ltd., Weifang University of Science and Technology, Shandong Shouguang Vegetable Industry Group Biological Control Technology Co., Ltd.
72: GUO, Jiajin, DING, Junyang, LIN, Guiyu, XIA, Haibo, DAI, Huijie, GUO, Yanchun, ZHANG, Chuanwei, XIAO, Wanli, HUANG, Shengxian
33: CN 31: 2022106706836 32: 2022-06-15
54: BEMISIA TABACI REPELLENT AND PREPARATION METHOD THEREFOR
00: -
Disclosed in the present invention are a bemisia tabaci repellent and a preparation method therefor, which belong to the technical field of insect control. The preparation method includes the following steps: preparing an initial mixture, performing aerogel modification, performing compounding, and performing post-treatment. A method for preparing the initial mixture includes: uniformly mixing a plant extract, nano zeolite powder, thymol, acetyl pyrazine and benzyl acetate, and then performing vacuum freeze drying, thereby obtaining the initial mixture after completion of the vacuum freeze drying. The bemisia tabaci repellent in the present invention can prolong the duration of the bemisia tabaci repellent, avoid influence on a crop yield, and inhibit oviposition of bemisia tabaci.

21: 2023/04278. 22: 2023/04/11. 43: 2023/10/13
51: G09B
71: SHANGHAI UNIVERSITY OF MEDICINE AND HEALTH SCIENCES
72: PENG, Wenxian
54: SIMULATED COMPUTED TOMOGRAPHY EQUIPMENT FOR MEDICAL IMAGING TRAINING
00: -
The present disclosure provides simulated computed tomography equipment for medical imaging training. The equipment includes a simulation CT (Computed Tomography) scanning gantry, a scanning bed and a central control assembly; the scanning bed includes a support assembly, a first drive assembly, a bearing component and a fixed assembly, the support assembly is supported on the ground, the bearing component bears a simulated patient and is movably connected to a top of the support assembly, the support assembly can regulate a height and a gradient for fixing the bearing component, and the first drive assembly can drive the bearing component to translate at the top of the support assembly; the fixed assembly can fix the position that the simulated patient is on the bearing component; and the central control assembly is in communication connection with the first drive assembly, and can control the action of the first drive assembly.

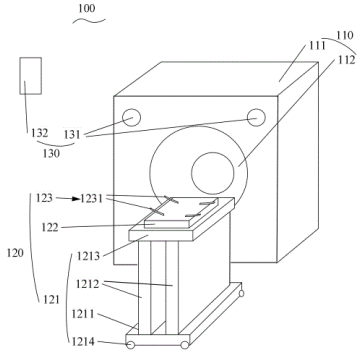

21: 2023/04280. 22: 2023/04/11. 43: 2023/10/13
51: A61H; A63B
71: THE FIRST AFFILIATED HOSPITAL OF BENGBU MEDICAL COLLEGE
72: YANG Xiaoyun, YANG Mei, CHEN Shuang, FAN Li, LI Baoguang, ZHANG Ying
54: DEVICE FOR CEREBRAL PALSY REHABILITATION
00: -
The invention belongs to the technical field of rehabilitation devices, in particular to a device for

cerebral palsy rehabilitation, which comprises a bottom plate, wherein one end of the top of the bottom plate is fixedly connected with a base; the top end of the base plate is movably connected with a seat part; one side of the base plate is provided with a lower limb exercise mechanism; the bottom end of the lower limb exercise mechanism is fixedly connected with the top end of the bottom plate; the side of the lower limb exercise mechanism away from the seat part is provided with a balance sense exercise part, the bottom end of the balance sense exercise part is fixedly connected to the top of the bottom plate, and the side of the balance sense exercise part away from the lower limb exercise mechanism is provided with a hand-held part, the bottom end of the hand-held part is fixedly connected to the top of the bottom plate. The device of the invention can improve the rehabilitation exercise effect of cerebral palsy patients, has various exercise functions, can adapt to patients with different heights, and has strong applicability.

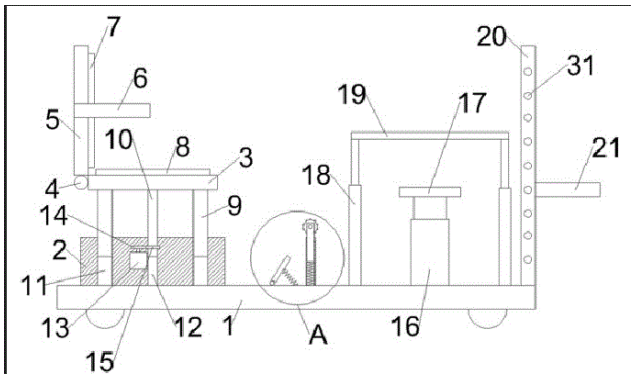

21: 2023/04281. 22: 2023/04/11. 43: 2023/10/13
51: A01C; A01G
71: CITRUS RESEARCH INSTITUTE OF ZHEJIANG PROVINCE
72: WANG, Peng, XU, Jianguo, JIN, Longfei, HUANG, Bei, WU, Shaohui, WEN, Mingxia
33: CN 31: 202210581115.9 32: 2022-05-25

54: PRODUCTION AND MANAGEMENT METHOD FOR "RED BEAUTY" ORANGES GOING ON SALE EARLY

00: -

The present invention discloses a production and management method for "Red Beauty" oranges going on sale early, which relates to the technical field of orange planting. According to the method of the present invention, facilities such as film insulated steel-frame multi-span greenhouses, clean energy heating equipment, temperature-humidity digital control equipment and the like are used to break dormancy of "Red Beauty" orange trees by heating so as to make the "Red Beauty" orange trees enter a growth period ahead of time; artificial regulation and control of temperature, light, water, fertilizer and the like are performed in a growth and development process, so that a comprehensive cultivation technology advances the whole phenological period, the go-on-sale time of high-quality orange fruits is advanced effectively, and the economic benefit of fruit farmers is increased.

21: 2023/04283. 22: 2023/04/11. 43: 2023/10/13
51: C03C
71: North China University of Water Resources and Electric Power
72: Zhang Chenxi, Wei Leyu, Shi Yurong, Chen Xi, Huang Liang, Han Peng, Yang Zhongzheng
33: CN 31: 2023102377196 32: 2023-03-13

54: PREPARATION METHOD OF SELF-CLEANING GLASS COATING

00: -

The invention provides a preparation method of a self-cleaning glass coating. According to the coating material for glass in the embodiment of the invention, ethyl orthosilicate and anhydrous ethanol are used as basic solutions to prepare silica sol-gel in an alkaline catalytic environment provided by ammonia water, a specific surface treatment agent perfluorosilane is added to modify the silica sol-gel, the modified coating is coated on the glass by a liquid level drawdown method to prepare self-cleaning glass, and the self-cleaning glass coating is obtained after surface drying. The method adopts the sol-gel process, which greatly reduces the complexity of the material preparation process, and the equipment is simple. Secondly, the gel is modified by fluorosilane, and the performance is stable. The hydrophobic angle of the coating is 150°, which has a good cleaning effect, strong adhesion, excellent hydrophobic performance and transparency.

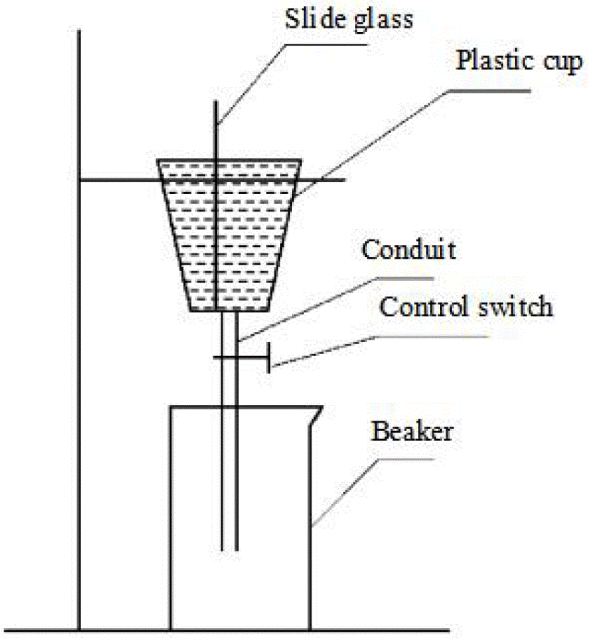

21: 2023/04284. 22: 2023/04/11. 43: 2023/10/13
51: C04B
71: North China University of Water Resources and Electric Power
72: Zhang Chenxi, Chen Xi, Wei Leyu, Xing Yan, Chen Xiao, Jiang Zhengquan, Yang Zhongzheng, Wang Huixian
33: CN 31: 2023102377092 32: 2023-03-13
54: METHOD FOR PREPARING HIGH-STRENGTH CERAMSITE FROM COAL GANGUE, FLY ASH AND STEEL SLAG
00: -
The invention discloses a preparation method of high-strength ceramsite, belonging to the technical field of ceramic material preparation. In the preparation method, coal gangue is used as the main raw material, fly ash and steel slag are used as auxiliary materials, the preheating temperature is 450oC, the preheating duration is 15 min, the sintering temperature is 1200oC, and the sintering duration is 15 min, and the coal gangue-based ceramsite with high-strength is prepared by a high-temperature sintering method.



21: 2023/04285. 22: 2023/04/11. 43: 2023/10/13
51: E21D
71: SHANDONG FANGDA ENGINEERING CO., LTD
72: FENG, Jinyi, YIN, Yanze, WANG, Yiyong, ZANG, Tao, QIN, Yang, JIN, Xin, YANG, Kai, ZHAO, Kai, JIA, Bin
33: CN 31: 202211394184.5 32: 2022-11-08
54: ZDY4200LS CRAWLER-TYPE ALL-HYDRAULIC TUNNEL DRILLING RIG FOR COAL MINES
00: -
Disclosed is a ZDY4200LS crawler-type all-hydraulic tunnel drilling rig for coal mines, including a main engine cabin. A caterpillar drive mechanism is jointly arranged at both ends of the main engine cabin; a second servo motor is mounted in the middle position of the top in the main engine cabin, and a connecting bearing is mounted in the middle position on the outer side of an output shaft of the second servo motor; a second circulate plate is mounted on the outer side of the connecting bearing; and four first hydraulic cylinders are uniformly mounted at the edges of the top of the second circular plate. In the present invention, a first servo motor drives a drive gear to rotate anticlockwise so as to drive the second round plate to rotate 90 degrees.

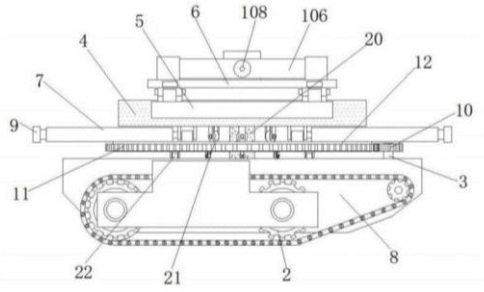

21: 2023/04286. 22: 2023/04/11. 43: 2023/10/13
51: B03D

71: BGRIMM TECHNOLOGY GROUP, China University of Geosciences(Bei Jing), Southwest University of Science and Technology, University of Science and Technology Beijing
72: Zhang Hua, Wang Qiong, Yao Jun, Fu Kai Bin, Yang Hui Fen, Cui Wei Hua, Wang Zhe, Jiang Hui
33: CN 31: 202310259116.6 32: 2023-03-17
54: METHOD FOR THE POPULARIZATION MODE OF HEAVY METAL POLLUTION PREVENTION AND CONTROL TECHNOLOGY INTEGRATION APPLIED IN COPPER DRESSING AND SMELTING SLAG DISPOSAL SITE AND AFFECTED AREAS
00: -
The invention discloses a method for the popularization mode of heavy metal pollution prevention and control technology integration applied in copper dressing and smelting slag disposal site and affected areas. The method comprises the heavy metal pollution sources and the grading of environmental pollution safety risk levels in the slag disposal site and the affected areas, screening of treatment technologies, and integration of comprehensive prevention and control technology and model construction. According to the invention, the field investigation and heavy metal pollution indexes monitoring are carried out on the environmental pollution situation around the source and affected areas of the southwest nonferrous metallurgy slag disposal site, so that the safety risk grades of environmental pollution of dressing and smelting slag disposal site and the affected areas are divided. And different characteristic areas of heavy metal pollution are technically screened, so that the heavy metal pollution of dressing and smelting slag disposal site and the affected areas can be effectively controlled, and the integrated technology of heavy metal pollution prevention and control of dressing and smelting slag disposal site and the affected areas can be constructed, and it can be verified and popularized through the technical demonstration of typical copper dressing and smelting slag disposal site and the affected areas.

21: 2023/04320. 22: 2023/04/12. 43: 2023/10/13
51: G09B
71: The First Affiliated Hospital, Sun Yat-sen University
72: Wenbin LEI, Xingmei WU, Jie DENG, Yihui WEN, Dan WANG
33: CN 31: 2023101680995 32: 2023-02-27
54: BOX-TYPE SELF-RETAINING LARYNGOSCOPIC SURGERY SIMULATING TRAINER
00: -
The present invention discloses a box-type self-retaining laryngoscopic surgery simulating trainer including a box and a larynx mimicking training module. An instrument operating opening is formed in a front face of the box, and an angle between the instrument operating opening and the larynx mimicking training module is an acute angle. The larynx mimicking training module includes a perforable circular ring and an inverted-V-shaped rubber strip located on a rear side of the circular ring. In the box-type self-retaining laryngoscopic surgery simulating trainer described above, the box and the larynx mimicking training module are combined and the instrument operating opening is formed in the box. A surgical instrument is placed via the instrument operating opening into an operating area of the larynx mimicking training module in the box to perform corresponding laryngoscopic surgery simulating operations, thereby achieving simplified simulation. The simulation operations are simpler. The trainer is suitable for primary skill training, allows for exercise with other mimics as carriers and enables training at any spare time during work, thus being prone to promotion.

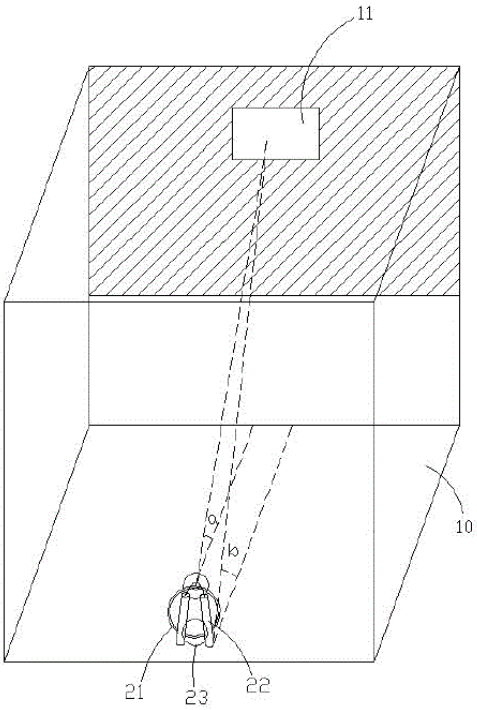

21: 2023/04330. 22: 2023/04/11. 43: 2023/10/12
51: A47D; F16F
71: FOTOGEARS TRADING (GUANGZHOU) LTD
72: QUAH, Yow Chun
33: CN 31: 202120281370.2 32: 2021-02-01
54: NOVEL SAFETY SPRING MOUNTING CLIP
00: -
The utility model discloses a novel safety spring mounting clip, comprising a spring connecting part and a suspension part, wherein the spring connecting part is connected to one end of the suspension part; both sides of the spring connecting part are respectively provided with a plurality of first through holes for springs to penetrate, and the plurality of through holes are longitudinally arranged; and one side of the suspension part is provided with an opening which inclines downwards and then bends upwards to form a q-shaped hole. In the novel spring mounting clip disclosed by the utility model, the plurality of first through holes of the spring connecting part are used for springs to penetrate and suspend and can isolate the noise generated by the tail ends of the springs due to friction, and the q-shaped hole makes the springs easily installed and not easy to disengage, enhancing the safety coefficient.

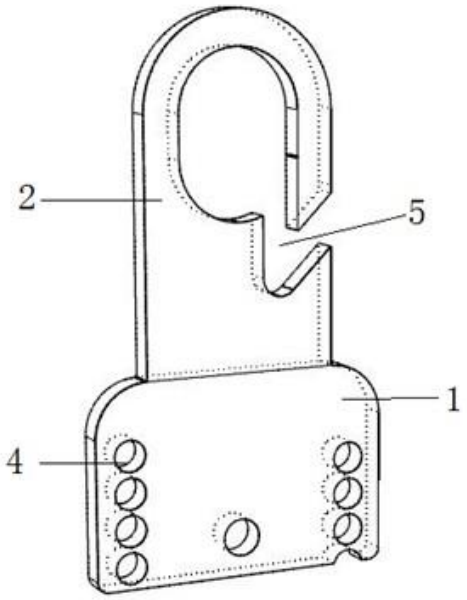

21: 2023/04412. 22: 2023/04/14. 43: 2023/10/16
51: B01J
71: TAIYUAN UNIVERSITY OF TECHNOLOGY
72: SU, Bingqin, WANG, Jian, LIN, Yuting, WU, Yuqi, ZHANG, Xialing, KONG, Haoxuan
33: CN 31: 2022107400673 32: 2022-06-28
54: MIL-101(FE) FOR ADSORBING NITRATE IN WATER, PREPARATION METHOD THEREFOR AND APPLICATION THEREOF
00: -
The present invention relates to the technical field of sewage treatment, in particular to MIL-101(Fe) for adsorbing nitrate in water, a preparation method therefor and an application thereof. The method comprises the following steps: mixing FeCl3, N,N-dimethylformamide, terephthalic acid and acetic acid, then performing hydrothermal reaction, and separating an obtained product system to obtain an intermediate product; and mixing the obtained intermediate product and methanol, and then performing hydrothermal reaction to obtain MIL-101(Fe). The MIL-101(Fe) material prepared by the present invention has an adjustable pore size, various pore channel structures and specific active sites, and the adsorption capacity of NO3- by the material can reach up to 14.10 mg/g. Moreover, the material has high adsorption efficiency, and can reach adsorption equilibrium within about 30 min.

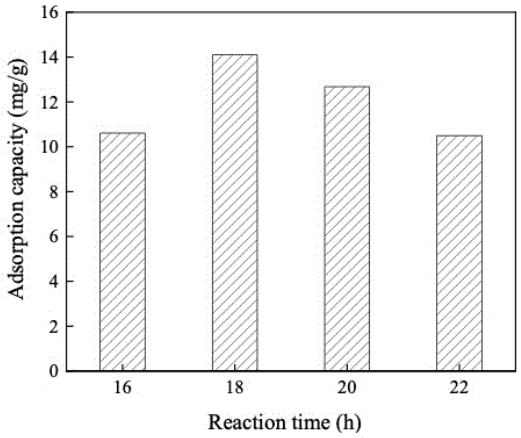

21: 2023/04438. 22: 2023/04/14. 43: 2023/10/16
51: B22D; B22F; C23F
71: ZHAO, Yuanyun
72: ZHAO, Yuanyun, LIU, Li
33: CN 31: 202011069507.4 32: 2020-09-30
54: ALLOY POWDER, PREPARATION METHOD THEREFOR, AND USE THEREOF
00: -
The present disclosure relates to a method for preparing a category of alloy powder and an application thereof. By selecting a suitable alloy system and melting initial alloy melt through low-purity raw materials, high-purity alloy powder, and matrix phase wrapping high-purity alloy powder are precipitated during the solidification process of the initial alloy melt, and the solid solution alloying of the high-purity alloy powder is achieved at the same time. Alloy powder can be obtained by removing the matrix phase wrapping the high-purity alloy powder; high-purity alloy powder can also be obtained by removing the matrix phase wrapping the high-purity alloy powder at an appropriate time. The method is simple and can prepare a variety of alloy powder materials with different morphology at nano-scale, sub-micron level, micron level, and even millimeter level, which has a good application prospect in the fields such as catalysis, powder metallurgy, composite materials, magnetic materials, sterilization, metal injection molding, metal powder 3D printing, coatings and composite materials.

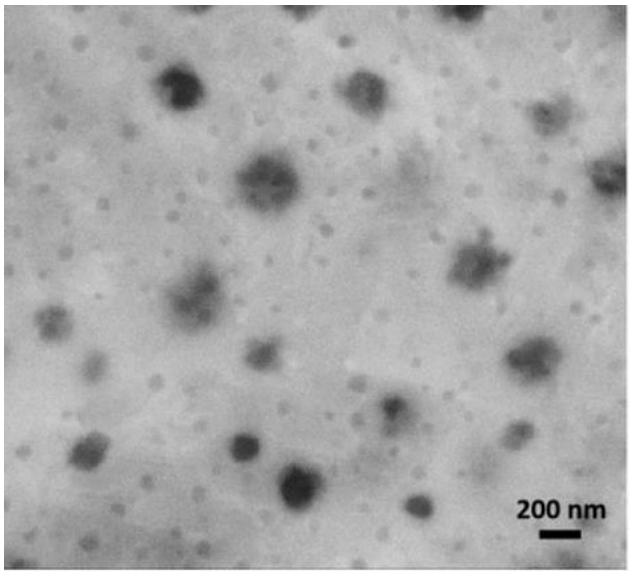

21: 2023/04473. 22: 2023/04/17. 43: 2023/09/29
51: F16C
71: Lu'an Maotongchang Technology Co., Ltd.
72: Xiulian Liu, Yiguo Bao
33: CN 31: 202211381062.2 32: 2022-11-06
54: A SELF-MAINTENANCE BEARING FOR ELECTRIC VEHICLE ASYNCHRONOUS MOTOR
00: -
The invention relates to a self-maintenance bearing, in particular to a self-maintenance bearing for an induction motor of an electric vehicle. It provides a kind of self-maintenance bearing for electric vehicle induction motor which can heat the bearing and not affect the accuracy of the bearing due to thermal expansion and cold contraction. The metal powder in the bearing can be extracted and filtered to improve the service life of the bearing and reduce the number of bearing replacement. The utility model relates to a self-maintenance bearing for an induction motor of an electric vehicle, which comprises an inner ring, a closed ring plate and an outer ring, etc. Both sides of the inner ring are welded with a closed ring plate, closed ring plate sliding type is provided with an outer ring. Through the curved rack constantly meshing with the column gear, the piston rod can be driven to move back and forth continuously, and then extract the lubricating oil with higher temperature in the liquid storage cavity, and then discharge the lubricating oil with higher temperature into the oil filter cavity for cooling, so that the heat generated by friction between the roller and the inner ring and the outer ring can be quickly taken away, and the service life of the bearing can be prolonged.

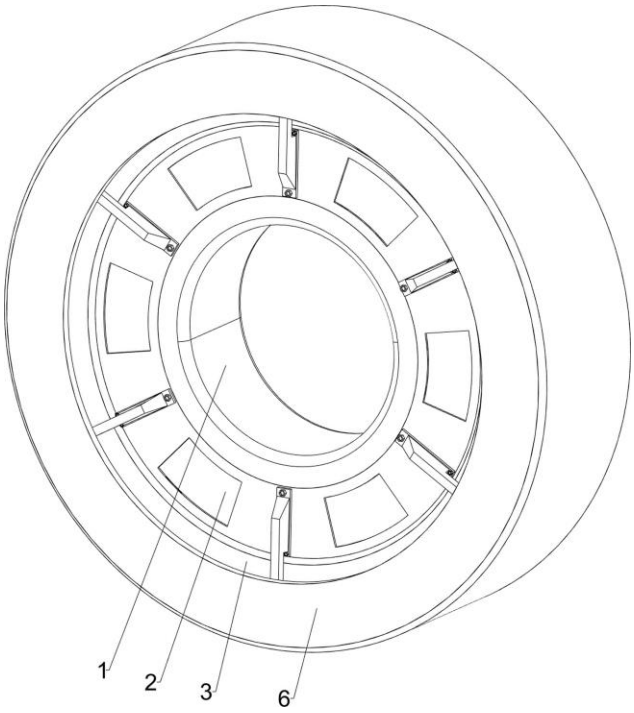

21: 2023/04518. 22: 2023/04/18. 43: 2023/10/16
51: E01B
71: CHINA RAILWAY BAOJI BRIDGE GROUP CO., LTD.
72: FENG, Yi, LEI, Jie, SHI, Qingfeng, WU, Guangze, YUAN, Baojun
33: CN 31: 202011475303.0 32: 2020-12-15

54: BOLTLESS FASTENER SYSTEM FOR HEAVY-HAUL RAILWAYS

00: -

Disclosed is a boltless fastener system for heavy-haul railways, comprising a concrete sleeper (1). A top surface of the concrete sleeper (1) is provided with two concrete shoulders (2); a rail bearing recess (12) is formed between the two concrete shoulders (2); first iron bases (3) are pre-buried on the inner sides of the concrete shoulders (2); one surface of the upper part of each first iron base (3) is abutted against one surface of the concrete shoulder (2) facing the inner side; a main part of the abutting surface of the upper part of each first iron base (3) against the concrete shoulder (2) is an inclined surface (9); the concrete shoulders (2) correspondingly form matching slopes (13) at positions where the concrete shoulders (2) abut against the inclined surfaces (9) of the first iron bases (3); the slopes (13) and the inclined surfaces (9) are cast together; arc-shaped elastic strips (6) are installed on the first iron bases (3); gauge blocks (7) are provided on the inner sides of the first iron bases; the gauge blocks (7) are fastened by means of the arc-shaped elastic strips (6); and the gauge blocks (7) can be fastened on a rail body of a steel rail (8) located in the rail bearing recess (12), or can be fastened on an iron pad (15) at the bottom of the steel rail (8). The boltless fastener system is especially suitable for use in heavy-haul railways having a large axle load of 40 tons or more.

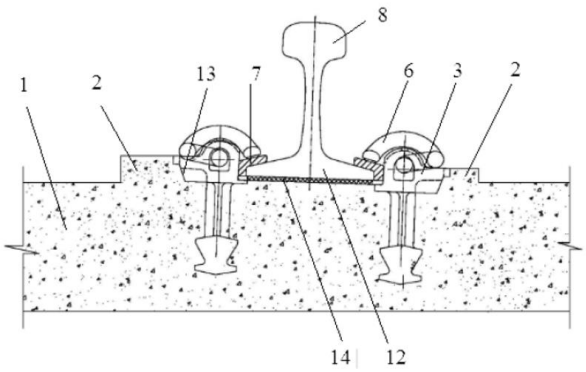

21: 2023/04578. 22: 2023/04/20. 43: 2023/10/16
51: A61K
71: HUNAN ACADEMY OF CHINESE MEDICINE
72: ZHOU, Rongrong, ZENG, Hongliang, HE, Dan, XIE, Yi, ZHANG, Shuihan

54: THE INVENTION RELATES TO AN EXTRACTION METHOD OF EUCOMMIA ULMODIES LEAF FLAVONOIDS AND ITS APPLICATION IN ACUTE LIVER INJURY

00: -

The invention provides an extraction method of Eucommia leaves flavonoids and its application in acute liver injury, belonging to the field of traditional Chinese medicine extraction. In the present invention, 24.6g of eucommia ulmoides leaf flavonoids with hepatoprotective effect were obtained from 500g dried eucommia ulmoides leaves by water decoction and AB8 macroporous adsorption resin separation and purification, among which quercetin 3-O-sambuloside, rutin, isoquercetin and astragalin were the main components. In the present invention, the flavonoids of Eucommia ulmoides leaves are processed and utilized, its chemical composition is clarified, it is found that it has good anti-inflammatory and anti-oxidation effects, and it is applied to anti-acute liver injury, which provides a new idea for the full development and utilization of Eucommia leaves resources,

suggesting that the flavonoids of Eucommia ulmoides leaves have broad application prospects in the field of liver protection.

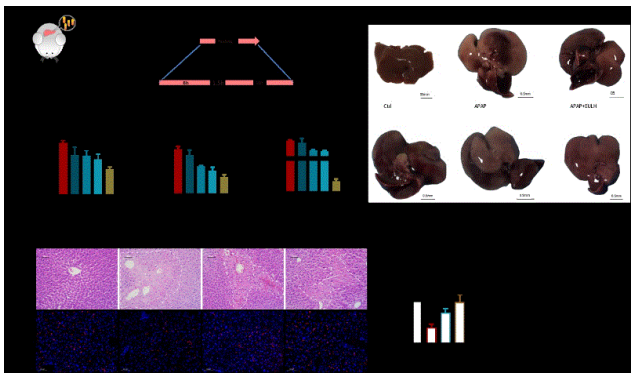

21: 2023/04579. 22: 2023/04/20. 43: 2023/10/16
51: E21D
71: HEFEI DESIGN & RESEARCH INSTITUTE OF COAL INDUSTRY CO., LTD., CHINA COAL NO. 71 ENGINEERING COMPANY LIMITED, CHANGZHOU WEITONG MINING EQUIPMENT CO., LTD
72: XU, Huidong, XU, Bin, ZHANG, Yong, MAN, Donghui, CHANG, Long, LV, Lin, LIU, Yingcan, ZHOU, Guozheng, LI, Zheng, BAO, Tingting, YE, Jinghui, CAO, Chuangguo, ZHANG, Peng, HU, Senxu, TIAN, Ye
33: CN 31: 2022110246182 32: 2022-08-25
54: FULL-HYDRAULIC FORMWORK DEVICE FOR SHAFT WALLING
00: -
Disclosed is a full-hydraulic formwork device for shaft walling. The full-hydraulic formwork device comprises formworks, a formwork supporting structure and a formwork guiding and moving assembly. The formworks are divided into an outer formwork and an inner formwork. The formwork supporting structure is of a cylindrical profile steel combined structure and is suspended at a lower part of a hanging scaffold at an upper part of the formwork supporting structure. One end of the formwork guiding and moving assembly is connected with the formwork supporting structure, and the other end of the formwork guiding and moving assembly is connected with the formwork. The formwork guiding and moving assembly can stretch out and draw back to achieve radial horizontal displacement of the formwork in a shaft. Horizontal movement of the formworks along the radial direction is achieved by adopting formwork positioning assemblies and the formwork guiding and moving assemblies, and the distance between the formwork and a center line of the shaft is accurately controlled, so that the formworks are positioned and fixed in the shaft.

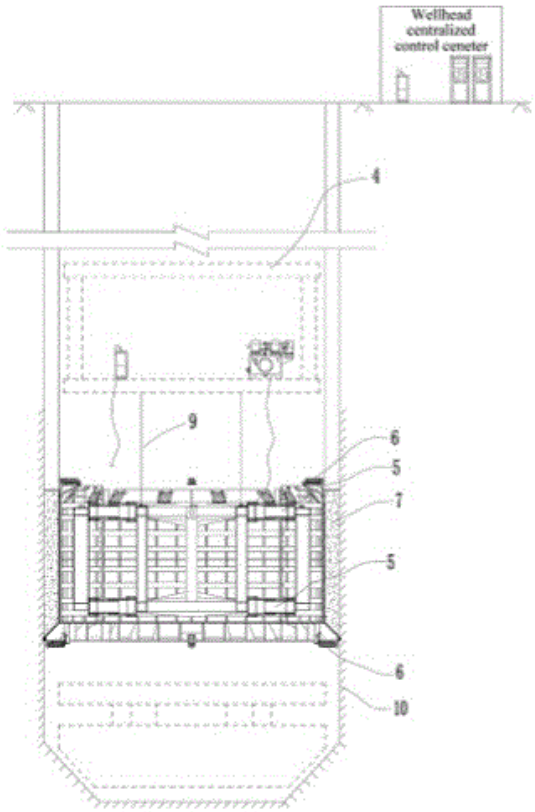

21: 2023/04633. 22: 2023/04/21. 43: 2023/10/16
51: A01K
71: NORTHEAST AGRICULFURAL UNIVERSITY
72: SUN, Jinhua, LIU, Shusheng, XU, Liangmei, NING, Fangyong, BI, Chongpeng, XIE, Jiajun
54: METHOD FOR PREPARING FEED FOR IMPROVING BLUE FOX FUR QUALITY
00: -
The present invention relates to the technical field of feed. The present invention provides a method for preparing feed for improving blue fox fur quality, which comprises the following raw materials in parts by weight: 20-30 parts of puffed corn, 13-17 parts of soybean meal, 4.5-5.5 parts of fermented soybean meal, 4-6 parts of fish meal, 2-3 parts of bone meal, 1-2 parts of germ meal cake, 2-3 parts of DDGS, 1.8-2.2 parts of feather meal, 13-15 parts of edible oil, 0.2-0.3 part of calcium hydrophosphate, 0.3-0.4 part of salt, and 0.8-1.2 parts of premix. The formula feed of the present invention is scientific and

reasonable in matching, reduces feed cost, and enables various nutritional indexes to meet growth requirements of blue foxes.

21: 2023/04849. 22: 2023/04/28. 43: 2023/10/16
51: A23L
71: LIUPANSHUI NORMAL UNIVERSITY
72: LIU, Linya, HUANG, Yacheng, HE, Bin
54: A ROXBURGH ROSE FLAVOR BEVERAGE AND A PREPARATION METHOD THEREOF
00: -

The present invention relates to the technical field of Rosa roxburghii beverages, in particular to a roxburgh rose flavor beverage and its preparation method. The roxburgh rose flavor beverage in the present invention greatly enhances the flavor of the beverage by the rich Rosa roxburghii aroma of Rosa roxburghii extract and the coconut aroma of coconut powder. While maintaining the unique flavor of Rosa roxburghii, it also possesses a unique coconut fragrance. Coconut powder and Dendrobium extract can neutralize the acidity of the Rosa roxburghii extract, enhancing the taste of the Rosa roxburghii beverage. The roxburgh rose flavor beverage has a pleasant aroma and a mellow taste. The present invention cleverly combines Rosa roxburghii, coconut powder, and dendrobium to provide a beverage that effectively retains the health activity and unique flavor of Rosa roxburghii. When drinking, it can be brewed with warm water, solving the problem of inconvenient consumption of Rosa roxburghii and providing new ideas for the research and development of Rosa roxburghii related products.

21: 2023/04850. 22: 2023/04/28. 43: 2023/10/16
51: A01G
71: INSTITUTE OF FOOD AND CROPS OF THE ACADEMY OF AGRICULTURAL SCIENCES OF YUNNAN PROVINCE
72: Wei DENG, Xiaolin LI, Ying LV, Yuran XU, Hua AN, Jianhua ZHANG, Sheping LI, Guiquan ZHANG
33: CN 31: 202211078350.0 32: 2022-09-05
54: INTEGRATED RICE AND DUCK CULTIVATING METHOD IN WHOLE PLANTING PERIOD OF RICE
00: -

The present disclosure relates to an integrated rice and duck cultivating method in a whole planting period of rice, belonging to the technical field of combined planting and raising. The method includes land preparation, seed soaking and germination, sowing and seedling, timely transplanting, stocking ducks, reasonable water management, timely harvest, etc. By virtue of the above method, the whole growth cycle of ducks can be fully integrated with the rice production cycle, solving the problem of complete disconnection between ducks and the second half of rice production in the traditional model, thereby achieving the purpose of rice-duck ecological cultivation. The present disclosure uses the characteristics of the two resources to achieve complementary advantages. The income of ducks per mu is 2,000 to 3,000 RMB, and the yield of rice per mu is more than 700 kg, which increases the actual income of farmers, and can effectively reduce environmental pollution and maintain ecological balance, and further is easy to promote and apply.



21: 2023/04852. 22: 2023/04/28. 43: 2023/10/16
51: H04L; H04W
71: CHOWDHURY, Shomenath Roy
72: CHOWDHURY, Shomenath Roy
33: IN 31: 202011047642 32: 2020-10-31

54: RADIO NETWORK PERFORMANCE OPTIMIZATION SYSTEM AND METHOD

00: -

Described herein is a radio network performance optimization system and method. The present invention is configured to improve network performance field processes, network performance solution, network performance data analytics as well as management information. The system includes a field process automation module, a network performance data analytics module and a management module. The field process automation module is configured to automate field processes in a drive testing procedure. The network performance data analytics module is configured to perform centralized automated analytics on the data retrieved from the field process automation module. The management module is configured to provide manage the field process automation module and the network performance data analytics module.

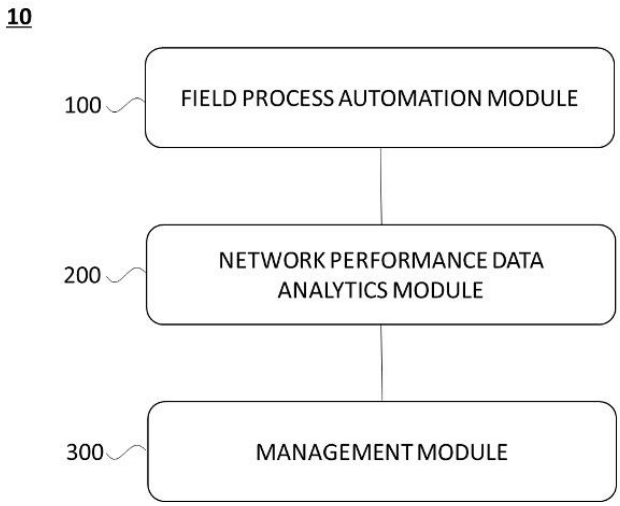

21: 2023/05203. 22: 2023/05/11. 43: 2023/07/18
51: B66F
71: HUANENG XINJIANG TUOSHI GANHE YAMANSU HYDROPOWER BRANCH
72: CHEN, Yongjun, HUA, Rongjun, YANG, Xuanyin, LIN, Wei, XIN, Jingfeng
33: CN 31: 202221320492.9 32: 2022-05-30

54: DISASSEMBLY AND ASSEMBLY DEVICE ASSISTED BY A WATER TURBINE

00: -

The dismantling device assisted by a water turbine. The manual hydraulic jacks used for dismantling under the water turbine previously required a large amount of manpower and time to operate. The three jacks often showed asynchronous lifting and lowering, causing the lifted object to tilt and increasing the danger of the dismantling work. This utility model comprises a seat ring (8), at least three lifting screws (3) and at least three support screws (4) threaded to the bottom circumferential surface of the seat ring. The lifting screws and support screws are distributed at intervals. Each lifting screw is fitted with a through-hole hydraulic jack (1) and fixed on the lifting screw by a fixing nut (2). Each support screw is threaded with a limited nut (7). This utility model is used for dismantling under the assistance of water turbines.

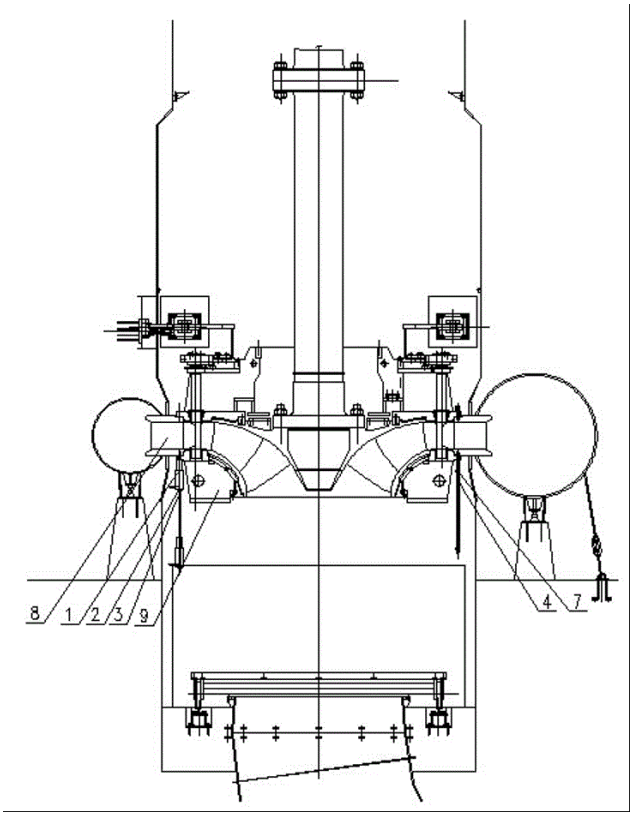

21: 2023/05534. 22: 2023/05/23. 43: 2023/09/27
51: G06T
71: Xiamen Meiya Pico Information Co., Ltd.
72: Wu Hongwei, Lin Xiuming, Liang Yulu, Shen Daiming, Lin Shuqiang, Zhu Haiyong
33: CN 31: 202210168277X 32: 2022-02-23

54: PERSON RE-IDENTIFICATION METHOD AND APPARATUS BASED ON SELF-SUPERVISED LEARNING, DEVICE AND STORAGE MEDIUM

00: -

The present invention provides a person re-identification method and apparatus based on self-

supervised learning, a device and a storage medium. The method includes: performing feature extraction on a training data set and the data-enhanced training data set respectively by adopting the same neural network to obtain a first feature vector and a second feature vector, calculating a first loss function between the first feature vector and the second feature vector, calculating a global loss function in a training process in combination with a second loss function during self-training of a model, and obtaining a person re-identification model by training with a goal of minimizing the global loss function. According to the present invention, the person re-identification model may learn inherent priori laws of images, thereby improving the accuracy of person re-identification.

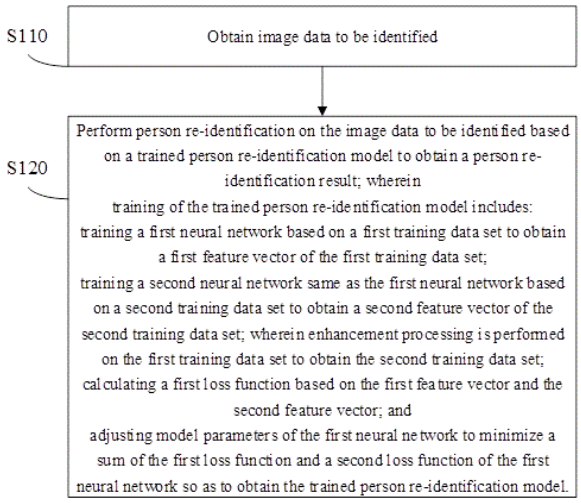

21: 2023/06453. 22: 2023/06/21. 43: 2023/10/04
51: H01L
71: SEOUL VIOSYS CO., LTD.
72: LEE, Joon Hee
33: KR 31: 10-2019-0064076 32: 2019-05-30
54: VERTICAL LIGHT-EMITTING DIODE
00: -
A light-emitting diode according to one embodiment comprises: a first conductive semiconductor layer; an upper insulating layer positioned on the first conductive semiconductor layer; a mesa, which comprises an active layer and a second conductive semiconductor layer, is positioned under a certain region of the first conductive semiconductor layer so as to expose the edge of the first conductive semiconductor layer, and comprises first and second through holes through which the first conductive semiconductor layer is exposed; a first electrode comprising first contact parts electrically connected to the first conductive semiconductor layer through the first through holes and second contact parts electrically connected to the first conductive semiconductor layer through the second through holes; a second electrode electrically connected to the second conductive semiconductor layer; and at least one upper electrode pad connected to the second electrode, wherein the first through holes are arranged in a region encompassed by the edge of the mesa, the second through holes are arranged along the edge of the mesa so that some of the second through holes are encompassed by the active layer and the second conductive semiconductor layer, respectively, and the upper insulating layer comprises a plurality of material layers.

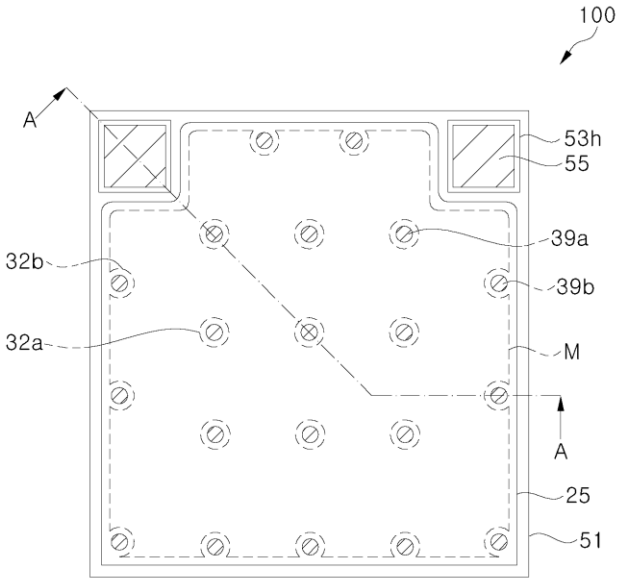

21: 2023/07199. 22: 2023/07/18. 43: 2023/08/16
51: G01S
71: CHINA ENERGY ENGINEERING GROUP JIANGSU POWER DESIGN INSTITUTE CO., LTD.
72: Xiangwei ZHAO, Zhengyu CHEN, Xin LI, Zhen QIN, Junmin XU, Ning WANG, Jie CHEN, Xiaohui YANG
33: CN 31: 202110954281.4 32: 2021-08-19
54: LARGE-SCALE GNSS NETWORK PARALLEL RESOLUTION METHOD AND SYSTEM BASED ON DYNAMIC PARTIONING
00: -
A dynamic-partitioning-based large-scale GNSS network automatic parallel resolving method is applicable to a large-scale GNSS network resolving

work field. The method comprises the steps of: 1) data collection and pre-processing; 2) automatic partitioning of an observation station subnet; 3) parallel automatic baseline resolution of partitions; and 4) comprehensive adjustment. The partitioning of the observation station and the parallel resolution of the partitions improve calculation efficiency.

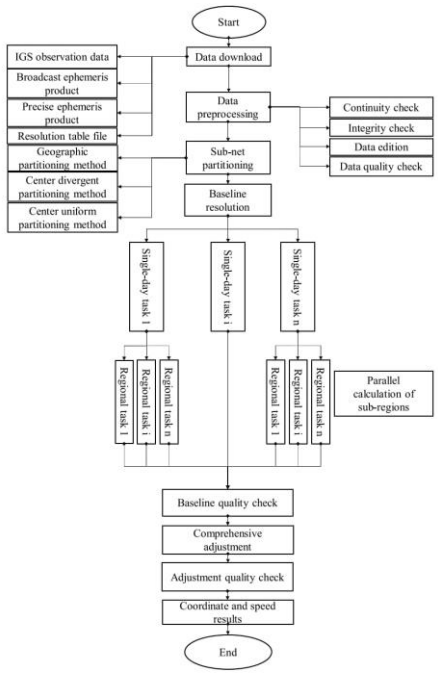

21: 2023/07854. 22: 2023/08/11. 43: 2023/09/27
51: G01L
71: HEBEI GEO UNIVERSITY
72: ZHENG, Yibo, WANG, Yuan, WANG, Han, ZHU, Yuehong, WEN, Jihua, LI, Mingliang, WANG, Guangxiang
33: CN 31: 2021110331301 32: 2021-09-03
54: A FIBER GRATING SENSOR FOR UNDERGROUND STRESS MONITORING
00: -

The present invention relates to the technical field of fiber grating sensors, in particular to a fiber grating sensor for underground stress monitoring, which comprises a sensor body (1) and a detection contact (7), a lower end of the sensor body (1) is fixedly connected to a connecting assembly that facilitates connection of the sensor body (1) and a transmission line (3), the sensor body (1) is fixedly connected with the transmission line (3) by the connecting assembly, the other end of the transmission line (3) is fixedly connected with the detection contact (7), an outer side of the transmission line (3) is provided with a protective assembly that has a support structure; in the present invention, through arrangement of a protective cover (2), a drying plate (17) and a groove (18), the sensor body (1) and the transmission line (3) can be separately carried during use, which is quite convenient. Through spiral connection of the protective cover (2) and the sensor body (1), normal use of the sensor can be ensured, and meanwhile, the sensor has quite good stability. Moreover, the protective cover (2) and a rotating snap ring (16) are arranged, such that the influence of outside humid environment on the sensor can be avoided, and the provided drying plate (17) can ensure that interior of the protective cover (2) is in a dry environment.

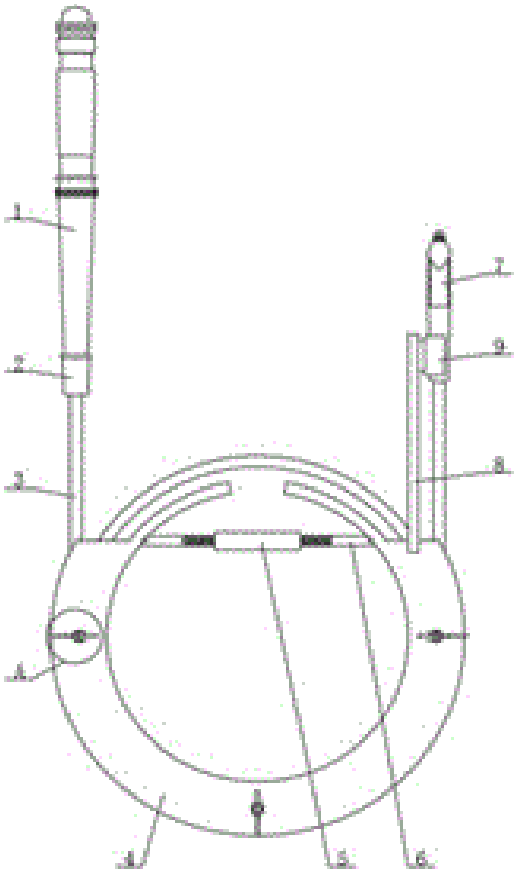

21: 2023/08000. 22: 2023/08/17. 43: 2023/10/05
51: B29B; B29C
71: KANDASAMY, Kumar
72: KANDASAMY, Kumar
33: US 31: 63/156,497 32: 2021-03-04
54: PROCESSES AND/OR MACHINES FOR PRODUCING CONTINUOUS PLASTIC

DEFORMATION, AND/OR COMPOSITIONS AND/OR MANUFACTURES PRODUCED THEREBY

00: -

Certain exemplary embodiments can provide a manufacturing method, process, machine, and/or system for continuously consolidating granular materials, creating new alloys and/or composites, and/or modifying and/or refining material microstructure, by using plastic deformation of feedstock(s) provided in various structural forms. Materials produced during this process can be fabricated directly and/or in forms such as, e.g., wires, rods, tubes, sheets, plate and/or channels, etc.

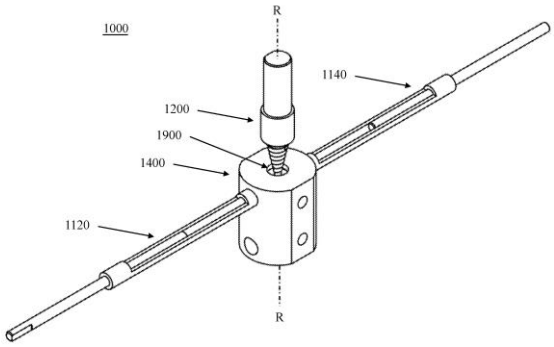

21: 2023/08389. 22: 2023/08/30. 43: 2023/10/03
51: E02F; E63B
71: CHINA HARBOUR ENGINEERING COMPANY LTD.
72: SU, YANSONG
33: CN 31: 2022103400585 32: 2022-04-01

54: ROCK BREAKING CUTTER SUCTION DREDGER AND DREDGING CONSTRUCTION METHOD THEREOF

00: -

The present invention discloses a rock breaking cutter suction dredger and a dredging construction method, wherein the rock breaking cutter suction dredger comprises: a cutter suction dredger body with a plurality of openings on tail portion and mutually parallel sliding grooves on top portion; and multiple sets of positioning mechanisms, wherein each set of positioning mechanisms is provided with a positioning support with a positioning hole whose periphery is provided with a positioning barrel perpendicular to the positioning support and a positioning pile, first hydraulic cylinders whose top is provided with positioning rings are arranged at positioning support whose bottom portion is provided with two mutually parallel protruding edges and both sides is provided with fixing blocks connected with second hydraulic cylinders parallel to the sliding groove. The present invention has reasonable design and convenient operation, and the positioning mechanism can ensure stable positioning of rock breaking cutter suction dredger.

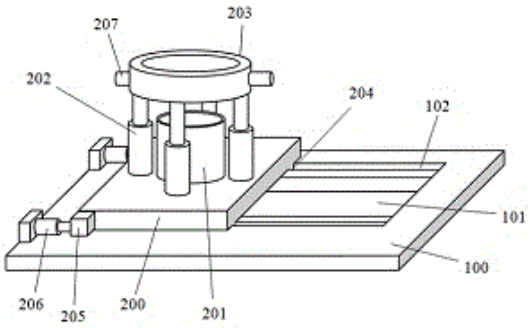

21: 2023/08437. 22: 2023/08/31. 43: 2023/10/02
51: B23K
71: GWEIKE TECH CO., LTD.
72: JIANG, Xifeng
33: CN 31: 2022104048343 32: 2022-04-18

54: BACK-END LASER INTEGRATION DEVICE FOR HIGH-END LASER DICING MACHINE OF MINILED CHIP

00: -

The present invention discloses a back-end laser integration device for a high-end laser dicing machine of a MiniLED chip and relates to the field of the MiniLED chip integration technologies. The back-end laser integration device for a high-end laser dicing machine of a MiniLED chip includes a laser integration machine. An inner side of the laser integration machine is provided with a conveyor belt, a surface of the conveyor belt is provided with an integration apparatus, the integration apparatus includes an integration plate, a lower side of the integration plate is disposed on an upper side of the conveyor belt, and the lower side of the integration plate is slidably connected to a bottom plate. The back-end laser integration device for a high-end laser dicing machine of a MiniLED chip ensures that the integration plate can achieve an orderly effect when integrating dices with different radiuses, guaranteeing the use flexibility of the integration plate. This makes it simple for the integration plate to

adjust the dices with different radiuses, and significantly reduces the complexity of necessarily replacing different integration boxes when dices with different radiuses are integrated in the conventional technologies, reducing material waste when integration boxes in different models are spared, thus greatly ensuring the use efficiency of the integration plate to integrate dices with different radiuses.

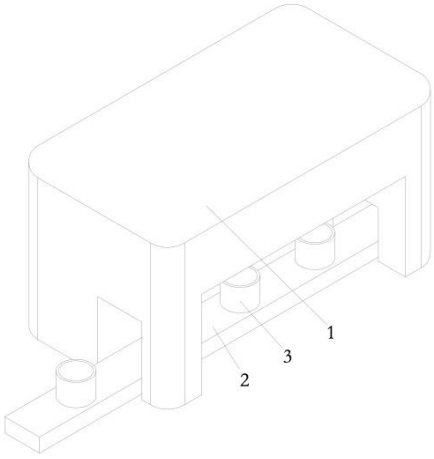

21: 2023/08458. 22: 2023/08/31. 43: 2023/10/02
51: A61K; C07D; A61P
71: YANTAI LANNACHENG BIOTECHNOLOGY CO., LTD.
72: CHEN, Xiaoyuan, XU, Pengfei, GUO, Zhide, WU, Xiaoming, YANG, Qingbao, HE, Tian
33: CN 31: 202110182478.0 32: 2021-02-10
33: CN 31: 202110753794.9 32: 2021-07-03

54: TRUNCATED EVANS BLUE MODIFIED FIBROBLAST ACTIVATION PROTEIN INHIBITOR, PREPARATION METHOD THEREFOR, AND APPLICATION THEREOF

00: -

A truncated Evans blue modified fibroblast activation protein inhibitor compound, formed by linking truncated Evans blue, a fibroblast activation protein inhibitor, and a nuclide chelating group together by linking groups L1, L2, L3, L4, and X, and having a structure as shown in formula (I). The compound and a radioactive label of the structure of the compound have a significantly prolonged blood circulation half-life and enhanced tumor uptake, enrichment and retention time, and are suitable for nuclide therapy and imaging of tumors having high FAP expression.

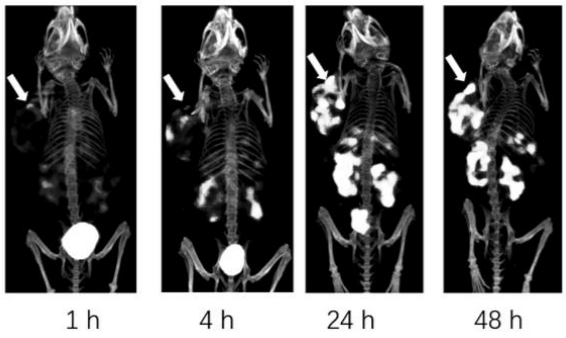

21: 2023/08459. 22: 2023/08/31. 43: 2023/10/02
51: A61K; C07D
71: YANTAI LANNACHENG BIOTECHNOLOGY CO., LTD.
72: CHEN, Xiaoyuan, XU, Pengfei
33: CN 31: 202110225558.X 32: 2021-03-01

54: COMPOUND TARGETING PROSTATE SPECIFIC MEMBRANE ANTIGEN, AND PREPARATION METHOD THEREFOR AND USE THEREOF

00: -

The present disclosure provides a compound targeting prostate specific membrane antigen (PSMA), wherein the compound has the following structure shown in Formula (I); R1 is a compound structure targeting prostate specific membrane antigen; L1 is -(X)n-(CH2)m-(Y)q-, X and Y are independently selected from lysine, glutamic acid or a derivative structure containing lysine and glutamic acid, n is an integer from 0 to 12, m is an integer from 0 to 60, q is an integer from 0 to 12, and each CH2 may be individually substituted with -O-, -NH(CO)-, or -(CO)-NH-; L2 is -(CH2)p-, p is an integer from 0 to 30, and each CH2 may be individually substituted with -O-, -NH(CO)-, or -(CO)-NH-; and R2 is a nuclide chelating group. The present disclosure also provides a radiolabeled complex based on the structure of the compound. The compound and the radiolabeled complex have appropriate blood circulation time, high uptake in tumors and long retention time, and are suitable for nuclide therapy and imaging of tumors with high expression of PSMA.

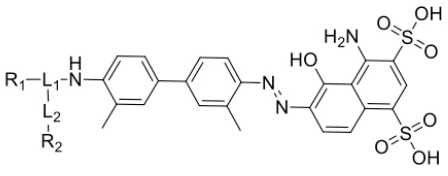

Formula (I)

21: 2023/08487. 22: 2023/09/04. 43: 2023/10/05
51: B66C
71: China Tiesiju Civil Engineering Group Co., Ltd.
72: Duan Qinan, Li Yunhao, Pei Yuhu, Deng Qiang, Liu Linfu, Chen Lin, Wu Yusong
33: CN 31: CN202211087891.X 32: 2022-09-07
54: FIXED-COLUMN TYPE CANTILEVER CRANE
00: -

The present invention relates to the technical field of hoisting structures, and more particularly, to a fixed-column type cantilever crane. The fixed-column type cantilever crane includes a crane machine, a traveling crane mechanism, an electric hoist and a hoisting hook, wherein the crane machine includes a slewing mechanism, a leveling mechanism and a cantilever main beam; the slewing mechanism is arranged on a flat car, and the end of the cantilever main beam is connected to the upper end of the slewing mechanism; the leveling mechanism is arranged on the slewing mechanism, and used for driving the cantilever main beam to swing in a left-right direction; the traveling crane mechanism is arranged on the cantilever main beam, and moves along the cantilever main beam; and the electric hoist is arranged on the traveling crane mechanism, and is connected to the hoisting hook. The slewing mechanism is arranged to adjust an orientation of the cantilever main beam, so that the electric hoist and the hoisting hook are conveniently driven to approach materials; and the leveling mechanism is arranged to adjust the heights of the left and right ends of the cantilever main beam to be the same, so that the traveling crane mechanism can drive the electric hoist to move right above the materials. Therefore, the fixed-column type cantilever crane can be normally used under a condition that a track is deflected.

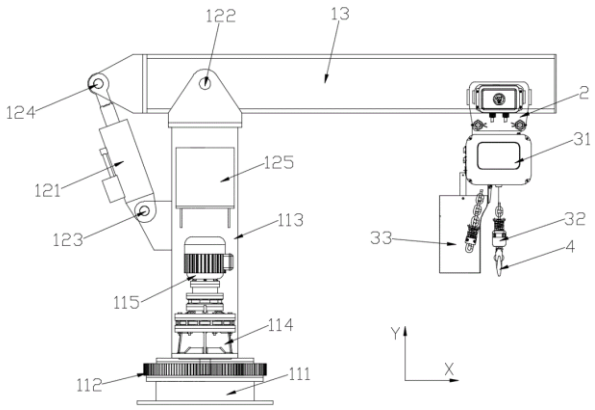

21: 2023/08499. 22: 2023/09/04. 43: 2023/10/05
51: B63H
71: CURCIO, Mario
72: CURCIO, Mario
33: EP 31: 21020083.8 32: 2021-02-21
54: AUTOPILOT SYSTEM FOR MARINE VESSELS
00: -

An autopilot system for automatically steering a marine vessel is disclosed. The marine vessel comprises two electric motors connected to respective propulsors, two rudders, a rudder steering mechanism and a navigation system for determining the vessel position with respect to an intended course. The autopilot system can operate according to one or more autopilot modes comprising at least a motor steering autopilot mode wherein the autopilot system is configured to automatically control the rudder steering mechanism in order to lock the rudders at a fixed angle, and based on a feedback from the navigation system to independently and dynamically adjust power supply to each of the propulsors by independently and dynamically regulating electric power supply to the respective electric motors in order to maintain the vessel on course.

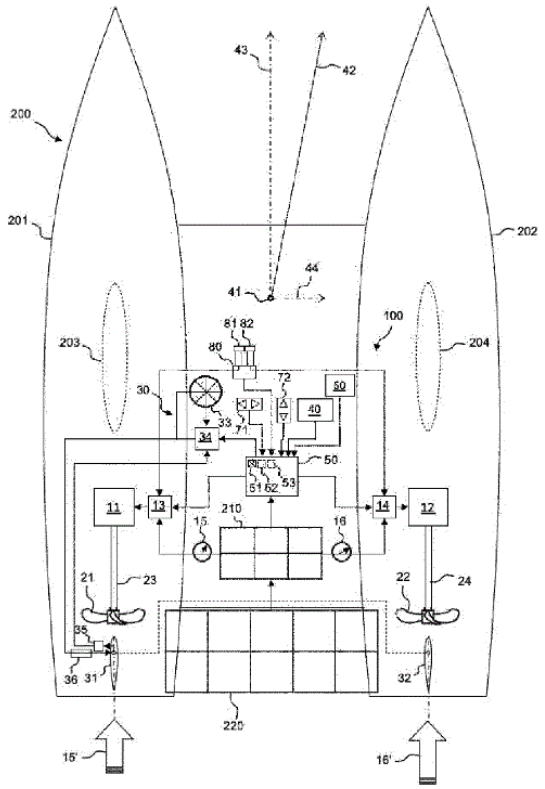

21: 2023/08534. 22: 2023/09/05. 43: 2023/10/05
51: A61G
71: HEBEI GEO UNIVERSITY, HEBEI JINKANGAN MEDICAL DEVICE TECHNOLOGY CO., LTD.
72: ZHENG, Yibo, LIU, Yongwei, WANG, Jiandong, LIU, Qiang, LI, Juguang, ZHANG, Lei, LI, Luochen, KANG, Junjian
33: CN 31: 2021108204666 32: 2021-07-20
54: NEAR-INFRARED BRAIN INJURY DETECTION METHOD AND DETECTION DEVICE
00: -

The present invention relates to the technical field of physical examination devices, especially a near-infrared based brain injury examination method and examination device, comprising an examination device and an elevating rack, an adjusting mechanism is connected at outside of the examination device, a stretching assembly is connected at another end surface of the adjusting mechanism, a metal detection instrument is connected at another end of the stretching assembly, a moving assembly is connected at a left side of a working bench, an elevating mechanism is connected at another end of the moving assembly, a bending link plate is connected at another end of the elevating mechanism; by configuration of the shim plate, the fixing block, the connection plate, the cushion, the rotation sleeve, the rotation table and the bending link plate, by moving the cushion, and driving the working bench to descend with the elevating rack, the patient can be moved to on the cushion, thereafter, the bending link plate is driven to move via the elevating mechanism and the patient is moved stably to the working bench, and for those with difficulty in movement the present examination device has high utility values.

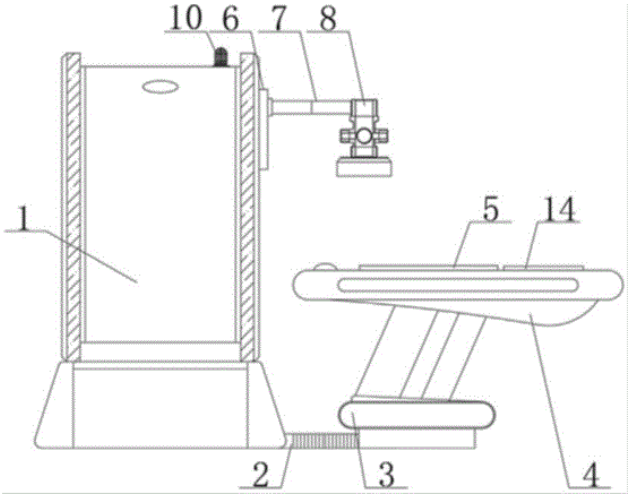

21: 2023/08893. 22: 2023/09/20. 43: 2023/10/05
51: C04B
71: Hebei Chemical & Pharmaceutical College
72: HAO, Lixia
33: CN 31: 2022111970364 32: 2022-09-29
54: SOLID WASTE-BASED 3D PRINTING MATERIAL
00: -

The present application provides a solid waste-based 3D printing material, which uses alpha desulfurization gypsum as the main raw material to prepare water-resistant 3D printing materials, and belongs to the technical field of 3D printing, wherein the 3D printing material includes 60 to 95 parts of alpha desulfurization gypsum, 10 to 15 parts of anhydrous desulfurization gypsum, 30 to 50 parts of iron tailings, and 0.1 to 2 parts of water reducing agent, 5 to 10 parts of adjustable solidification waterproofing agent and 0.1 to 3 parts of redispersible latex powder by weight. Municipal waste incineration fly ash, barium slag and steel slag are used to prepare an adjustable solidification waterproofing agent by calcining at a low temperature. By synergic action with iron tailings and

gypsum the solid waste-based 3D printing material regulates the setting time of gypsum-based materials, improves printing performance and water resistance and achieves collaborative utilization of multiple solid wastes. The present application uses desulfurization gypsum, iron tailings and other industrial waste residues as main raw materials to prepare 3D printing materials, realizing the resource utilization of industrial solid wastes, which is of great significance for low-carbon emission reduction and improving the ecological environment.

21: 2023/08970. 22: 2023/09/21. 43: 2023/10/05
51: C08G
71: Carpoly Chemical Group Co., Ltd.
72: Chen Yang
33: CN 31: 202111576048.3 32: 2021-12-20

54: WATER-BASED SEALED POLYISOCYANATE CURING AGENT AND PREPARATION METHOD AND APPLICATION THEREOF

00: -

The present invention belongs to the technical field of coating curing agents, and discloses a water-based sealed polyisocyanate curing agent and preparation method and application thereof. The preparation method includes: mixing sulfonate, a diisocyanate trimer and a catalyst, carrying out a first reaction, adding bisulfite after the reaction, carrying out a second reaction, and preparing the water-based sealed polyisocyanate curing agent. According to the water-based sealed polyisocyanate curing agent provided by the present invention, the bisulfite is used as a sealed agent, features a low unsealing temperature, an excellent water dispersibility and a storage stability, and can be applied to various baking coatings. The water-based polyurethane coating prepared by the water-based sealed polyisocyanate curing agent provided by the present invention has a strong stability, a small change in storage viscosity at high temperature, a high gloss and a high transparency of a formed paint film.

21: 2023/08971. 22: 2023/09/21. 43: 2023/10/05
51: E04B
71: North China University of Science and Technology
72: Liu Bo, Chen Juannong, Gao Lin, Lu Yankai
33: CN 31: 202211281614.2 32: 2022-10-19

54: PREFABRICATED CONCRETE CONNECTION STRUCTURE AND CONSTRUCTION METHOD

00: -

The present invention relates to the technical field of the construction engineering, and especially, to a prefabricated concrete connection structure and construction method. The structure includes a shear wall component, a top of the shear wall component is fixedly connected to a plurality of connecting female heads, the plurality of connecting female heads are arranged at equal intervals along a length direction of the shear wall component,the shear wall component is disposed with a plurality of steel bar cage reserved holes, the plurality of steel bar cage reserved holes are arranged at equal intervals along the length direction of the shear wall component, the plurality of steel bar cage reserved holes are arranged at intervals with the plurality of connecting female heads, the plurality of steel bar cage reserved holes penetrate through a top and a bottom of the shear wall component, the bottom of the shear wall component is disposed with a plurality of connecting male heads, the plurality of connecting male heads are arranged at equal intervals along the length direction of the shear wall component, the plurality of connecting male heads are in one-to-one correspondence with the plurality of connecting female heads, and one side of the bottom of the shear wall component is fixedly connected to a folding plate. The present invention can achieve the object of convenient and fast connection of the shear wall component, and improve the construction efficiency and quality.

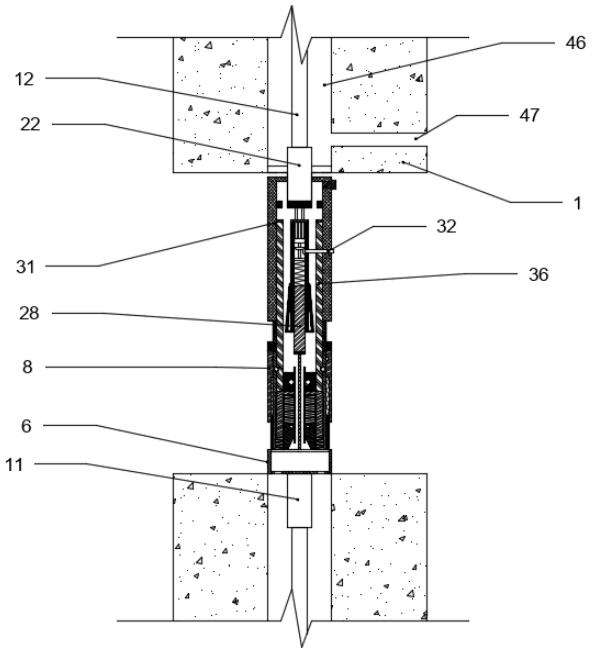
46
12
47
22
1
32
31
36
28
8
6
11

HYPOTHECATIONS

No records available

JUDGMENTS

No records available

OFFICE PRACTISE NOTICES

NOTICE OF ADVERTISEMENT FOR AN APPLICATION FOR AMENDMENT DURING COURT PROCEEDINGS

SAPPI Southern Africa Limited (*"Sappi"*) has applied for the revocation of South African patent No. 2018/07116 in the name of Jinan Shengquan Group Share Holding Co., Ltd (*"Jinan"*) in respect of an invention entitled "*Method for Producing High-Activity Lignin and By-Product of Furfural and Application Thereof*" ("the Patent"). During the pendency of the revocation proceedings Jinan made application in terms of section 51(9) of the South African Patent Act, Act 57 of 1978 for the amendment of the claims of the Patent.

The application for the amendment of the claims is open to inspection on appointment at the offices of the patent attorneys for the Patentee reflected below and at the Patent Office.

Any person wishing to oppose the application for the amendment may apply to be joined in these proceedings within 2 (two) months from the date of publication of this notice by filing an application for intervention as contemplated in Rules 10 and 12 of the Uniform Rules of Court. Once joined, the further proceedings are to be governed by the provisions of Rule 6 of the Uniform Rules of Court, unless the Commissioner of Patents otherwise directs.

M Vally
Patent Attorney for the Patentee
MViP Attorneys
236 Frederick Drive
Northcliff
Johannesburg
010 593 0756

3. DESIGNS

DESIGNS

APPLICATIONS FOR REGISTRATION OF DESIGNS IN TERMS OF ACT No. 195 OF 1993

The particulars appear in the following sequence: Copies of the application and representations cannot be supplied until application is registered and advertised. In all correspondence reference should be made to the number of the application. Application number, full name of applicant, class, articles to which design is to be applied and priority date (if any)

THE PARTICULARS APPEAR IN THE FOLLOWING SEQUENCE:

The numerical references denote the following: **(21)** Number of application. **(22)** Date of lodgement. **(23)** release date (if applicable). **(DR)** Date of registration. **(52)** Class. **(24)** Type of design. **(71)** Name(s) of applicant(s). **(33)** Country. **(31)** Number and. **(32)** Date of convention application. **(54)** Articles to which design is to be applied. **(57)** Brief statement of features.

. - APPLIED ON 2023/09/25 -

F2023/01033 - WAVE PAPER (PTY) LTD Class 9. A BLANK FOR A TRAY FOR FOOD PACKAGING

A2023/01034 - TASSI, Giuseppe Class 25. BRICK

F2023/01032 - WAVE PAPER (PTY) LTD Class 9. A BLANK FOR A TRAY FOR FOOD PACKAGING

F2023/01035 - TASSI, Giuseppe Class 25. BRICK

F2023/01031 - SMT SCHARF AFRICA (PTY) LTD Class 13. BATTERY MODULE

. - APPLIED ON 2023/09/27 -

F2023/01045 - GEBERIT INTERNATIONAL AG Class 23. TOILET

A2023/01049 - GEBERIT INTERNATIONAL AG Class 23. TOILET

F2023/01044 - GEBERIT INTERNATIONAL AG Class 23. TOILET

F2023/01046 - GEBERIT INTERNATIONAL AG Class 23. TOILET

A2023/01048 - GEBERIT INTERNATIONAL AG Class 23. TOILET

A2023/01050 - GEBERIT INTERNATIONAL AG Class 23. TOILET

F2023/01043 - GEBERIT INTERNATIONAL AG Class 23. TOILET

F2023/01053 - GEBERIT INTERNATIONAL AG Class 23. TOILET

F2023/01052 - GEBERIT INTERNATIONAL AG Class 23. TOILET

A2023/01039 - GEBERIT INTERNATIONAL AG Class 23. TOILET

A2023/01036 - GEBERIT INTERNATIONAL AG Class 23. TOILET

F2023/01054 - GEBERIT INTERNATIONAL AG Class 23. TOILET

A2023/01042 - GEBERIT INTERNATIONAL AG Class 23. TOILET

A2023/01041 - Bayerische Motoren Werke Aktiengesellschaft Class 12. MOTOR VEHICLES

F2023/01051 - GEBERIT INTERNATIONAL AG Class 23. TOILET

A2023/01040 - Omni United (S) PTE Ltd. Class 12. TYRES AND TYRE TREADS

A2023/01047 - GEBERIT INTERNATIONAL AG Class 23. TOILET

A2023/01037 - GEBERIT INTERNATIONAL AG Class 23. TOILET

. - APPLIED ON 2023/09/28 -

A2023/01055 - CJ CHEILJEDANG CORPORATION Class 9. PACKAGING BAG FOR FOODSTUFFS

A2023/01088 - Service Trumpet Pty Ltd Class 32. SERVICETRUMPET STAR

F2023/01057 - CONRADIE FAMILY TRUST Class 04. GOLF CLUB HEAD CLEANER

A2023/01056 - CONRADIE FAMILY TRUST Class 04. GOLF CLUB HEAD CLEANER

. - APPLIED ON 2023/09/29 -

A2023/01058 - Nacon Class 21. GAME CONTROLLERS

. - APPLIED ON 2023/10/02 -

A2023/01068 - GEBERIT INTERNATIONAL AG Class 23. PIPE ELEMENT

F2023/01060 - GEBERIT INTERNATIONAL AG Class 23. PIPE ELEMENT

A2023/01071 - Stapleton Bosealetse Class 13. SEMI CIRCULAR SOLAR PANELS

A2023/01069 - GEBERIT INTERNATIONAL AG Class 23. PIPE ELEMENT

A2023/01067 - GEBERIT INTERNATIONAL AG Class 23. PIPE ELEMENT

F2023/01063 - GEBERIT INTERNATIONAL AG Class 23. PIPE ELEMENT

F2023/01064 - GEBERIT INTERNATIONAL AG Class 23. PIPE ELEMENT

F2023/01066 - GEBERIT INTERNATIONAL AG Class 23. PIPE ELEMENT

A2023/01065 - GEBERIT INTERNATIONAL AG Class 23. PIPE ELEMENT

F2023/01062 - GEBERIT INTERNATIONAL AG Class 23. PIPE ELEMENT

F2023/01061 - GEBERIT INTERNATIONAL AG Class 23. PIPE ELEMENT

F2023/01059 - ELSE HOLDINGS (PTY) LTD Class 09. SPILL-PREVENTABLE CONTAINER

A2023/01072 - GEBERIT INTERNATIONAL AG Class 23. PIPE ELEMENT

A2023/01070 - GEBERIT INTERNATIONAL AG Class 23. PIPE ELEMENT

. - APPLIED ON 2023/10/03 -

A2023/01073 - Dr. Ing. h.c. F. Porsche Aktiengesellschaft Class 21. CARS

. - APPLIED ON 2023/10/04 -

A2023/01080 - SOMIC Verpackungsmaschinen GmbH & Co. KG Class 15. HOUSINGS FOR PACKAGING MACHINES AND PARTS THEREOF

F2023/01075 - SASPINE (PTY) LIMITED Class 24. PERCUTANEOUS ACCESS DEVICE

A2023/01079 - SOMIC Verpackungsmaschinen GmbH & Co. KG Class 15. HOUSINGS FOR PACKAGING MACHINES

A2023/01077 - SOMIC Verpackungsmaschinen GmbH & Co. KG Class 15. HOUSINGS FOR PACKAGING MACHINES

F2023/01076 - SASPINE (PTY) LIMITED Class 24. PERCUTANEOUS ACCESS DEVICE

A2023/01078 - SOMIC Verpackungsmaschinen GmbH & Co. KG Class 15. HOUSINGS FOR PACKAGING MACHINES

F2023/01074 - Casper Hendrik Badenhorst Class 12. TRAILER

. - APPLIED ON 2023/10/05 -

A2023/01081 - WU, Yueli Class 23. SOLAR ENERGY COLLECTOR

A2023/01082 - Lashify, Inc. Class 28. LASH EXTENSIONS

A2023/01087 - TSHEGOFATSO LINDSEY MATSIPE Class 02. CHECKMATE WEAR

A2023/01083 - SPECTRIS CANADA INC. Class 8. SAMPLE HOLDER

A2023/01085 - SPECTRIS CANADA INC. Class 8. SAMPLE HOLDER

A2023/01086 - SPECTRIS CANADA INC. Class 8. SAMPLE HOLDER

A2023/01084 - SPECTRIS CANADA INC. Class 8. SAMPLE HOLDER

. - APPLIED ON 2023/10/06 -

A2023/01089 - PRINSLOO, Wessel Frans, TOPFLOOR CONCRETE PROPRIETARY LIMITED Class 25. CONSTRUCTION MEMBERS

F2023/01090 - PRINSLOO, Wessel Frans, TOPFLOOR CONCRETE PROPRIETARY LIMITED Class 25. CONSTRUCTION MEMBERS

. - APPLIED ON 2023/10/09 -

A2023/01092 - Versuni Holding B.V. Class 07. BEAKER

A2023/01093 - Versuni Holding B.V. Class 07. BEAKER

A2023/01094 - Versuni Holding B.V. Class 07. STAND WITH ACCESSORIES

A2023/01091 - Versuni Holding B.V. Class 07. HAND MIXER

. - APPLIED ON 2023/10/10 -

A2023/01095 - XYLEM EUROPE GMBH Class 15. PART OF A PUMP

A2023/01096 - XYLEM EUROPE GMBH Class 15. PART OF A PUMP

A2023/01097 - Skechers U.S.A., Inc. II Class 2. FOOTWEAR

F2023/01099 - Plaas-Plaas (Pty) Ltd Class 21. FARM FENCING COMPONENTS

A2023/01098 - Skechers U.S.A., Inc. II Class 2. FOOTWEAR

. - APPLIED ON 2023/10/11 -

F2023/01123 - Kebaabetwse Given Thato Makhutla Class 20. UDUBS AMULOG

A2023/01102 - KUAT INNOVATIONS LLC Class 12. UTILITY RACK

F2023/01100 - Plaas-Plaas (Pty) Ltd Class 21. LIVESTOCK HANDLING EQUIPMENT COMPONENTS

A2023/01101 - Hemro International AG Class 31. COFFEE GRINDERS

. - APPLIED ON 2023/10/12 -

A2023/01107 - EVA-LAST DISTRIBUTORS (PTY) LTD Class 08. BRACKET

A2023/01105 - EVA-LAST DISTRIBUTORS (PTY) LTD Class 08. BRACKET

F2023/01106 - EVA-LAST DISTRIBUTORS (PTY) LTD Class 08. BRACKET

F2023/01108 - EVA-LAST DISTRIBUTORS (PTY) LTD Class 08. BRACKET

A2023/01103 - KUAT INNOVATIONS LLC Class 12. UTILITY RACK

A2023/01104 - TEQAL (PTY) LTD Class 09. A CONTAINER

. - APPLIED ON 2023/10/13 -

A2023/01113 - EVA-LAST DISTRIBUTORS (PTY) LTD Class 08. POST MOUNT

F2023/01116 - NIENHUIS, Jan, Balster Class 13. L-BRACKET FOR MOUNTING SOLAR PANEL RAILS ON ROOFS

F2023/01112 - EVA-LAST DISTRIBUTORS (PTY) LTD Class 08. CLIP

A2023/01120 - RMH Tech LLC Class 8. MOUNTINGS

A2023/01111 - EVA-LAST DISTRIBUTORS (PTY) LTD Class 08. CLIP

A2023/01119 - RMH Tech LLC Class 8. MOUNTINGS

F2023/01109 - ORB SPORTS AND LEISURE CC Class 21. INFLATABLE BALL

F2023/01117 - NIENHUIS, Jan, Balster Class 13. SLOTTED WASHER FOR BRACKETS AND RAILS FOR MOUNTING SOLAR PANEL RAILS ON ROOFS

A2023/01118 - SCHOELLER ALLIBERT GMBH Class 9. BOTTLE CRATE

F2023/01115 - NIENHUIS, Jan, Balster Class 13. M430 ROOF SHEET CLAMP FOR MOUNTING SOLAR PANELS

F2023/01114 - EVA-LAST DISTRIBUTORS (PTY) LTD Class 08. POST MOUNT

F2023/01110 - Alco Exotic Green Building Products CC Class 25. TRIMS FOR FLOORING OR CARPETING

. - APPLIED ON 2023/10/16 -

F2023/01121 - GIDEON JOHANNES HITCHCOCK, GIDEON JOHANNES HITCHCOCK Class 07. BEACKET FOR VERTICAL ADJUSTMENT

. - APPLIED ON 2023/10/17 -

A2023/01122 - Bayerische Motoren Werke Aktiengesellschaft Class 12. MOTOR VEHICLES

. - APPLIED ON 2023/10/18 -

F2023/01125 - DERMAPHARM AG Class 24. APPARATUS FOR THERMOTHERAPY

A2023/01124 - DERMAPHARM AG Class 24. APPARATUS FOR THERMOTHERAPY

. - APPLIED ON 2023/10/19 -

A2023/01128 - THE MARK ROSS FAMILY TRUST Class 25. A CONTAINERISED ABLUTION FACILITY

A2023/01126 - GUARDIAR SOUTH AFRICA (PTY) LTD Class 08. FENCING CLAMP

F2023/01127 - GUARDIAR SOUTH AFRICA (PTY) LTD Class 08. FENCING CLAMP

. - APPLIED ON 2023/10/20 -

A2023/01130 - UNILEVER GLOBAL IP LIMITED Class 9. CONTAINER

A2023/01129 - UNILEVER GLOBAL IP LIMITED Class 9. CONTAINER

CHANGE OF NAME IN TERMS OF REGULATION 24

No records available

APPLICATION FOR THE RESTORATION OF A LAPSED DESIGN UNDER SECTION 23 OF THE ACT

No records available

APPLICATION TO CORRECT AND/OR AMEND DESIGNS APPLICATION OR REGISTRATION

No records available

21: A2020/00594 22: 2020-05-14 23:
43: 2023-08-14
52: Class 12 24: Part A
71: DAYN AMADE INVENTIONS LTD
33: GB 31: 6077600 32: 2019-11-27
54: INTERACTIVE TRAILER
57: The design is applied to an interactive trailer. The features of the design for which protection is claimed are those of the shape and/or configuration and/or pattern of the interactive trailer, substantially as illustrated in the accompanying representation. Features shown in broken lines do not form part of the design and are disclaimed.

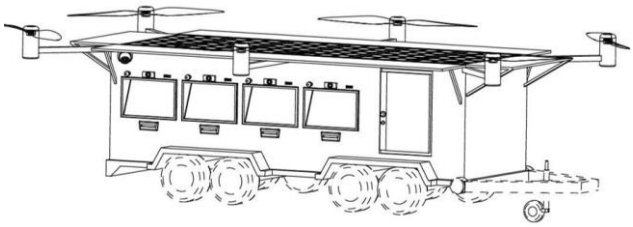

21: A2020/01700 22: 2020-12-23 23:
43: 2023-08-10
52: Class 12. 24: Part A
71: ASIAN HONDA MOTOR CO., LTD.
33: JP 31: 2020-013258 32: 2020-06-30
54: Automobile
57: The design relates to an automobile. The features of the design are those of shape and/or configuration and/or ornamentation.



FRONT LEFT PERSPECTIVE VIEW

21: A2021/00472 22: 2021-05-03 23:
43: 2023-08-10
52: Class 23. 24: Part A
71: BRITA GMBH
33: EM 31: 008253421-0003 32: 2020-11-05
54: Water Filter Cartridge
57: The design relates to a water filter cartridge. The features of the design are those of shape and/or configuration and/or pattern and/or ornamentation.

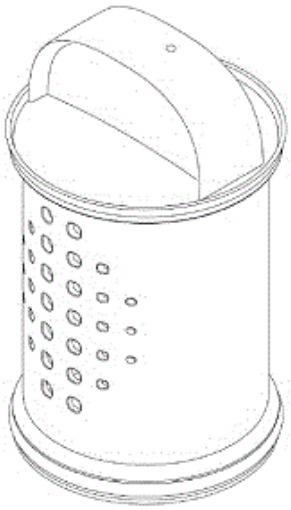

PERSPECTIVE VIEW

21: A2022/00035 22: 2022-01-11 23:
43: 2023-08-10
52: Class 12. 24: Part A
71: THULE SWEDEN AB
33: US 31: 29/799,874 32: 2021-07-16
54: Cargo Platform
57: The design relates to a cargo platform. The features of the design are those of shape and/or configuration and/or pattern and/or ornamentation.

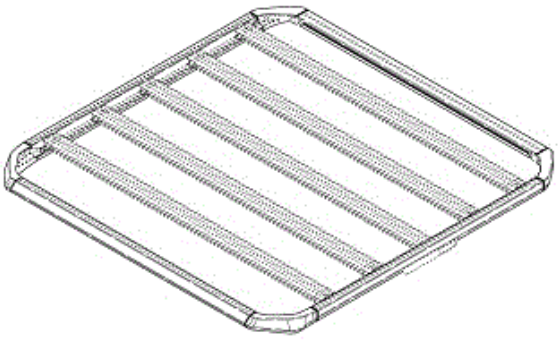

TOP PERSPECTIVE VIEW

21: A2022/00043 22: 2022-01-13 23:
43: 2023-08-10

52: Class 12. 24: Part A
71: WHEEL PROS, LLC
33: US 31: 29/806,566 32: 2021-09-03
54: Wheel
57: The design relates to a wheel. The features of the design are those of shape and/or configuration and/or pattern and/or ornamentation.

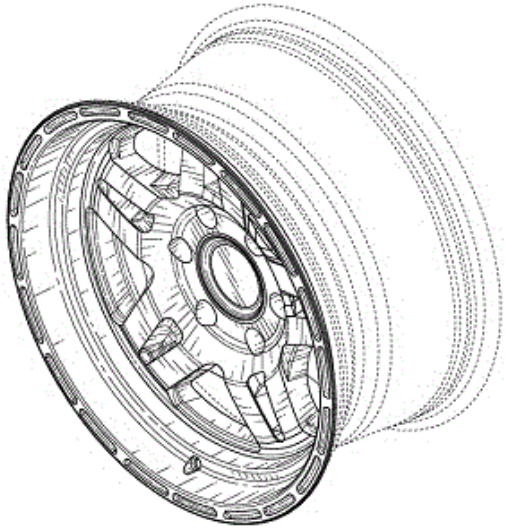

PERSPECTIVE VIEW

21: A2022/00337 22: 2022-03-31 23:
43: 2023-08-10
52: Class 7. 24: Part A
71: DART INDUSTRIES INC.
33: US 31: 29/814,610 32: 2021-11-08
54: Storage Container
57: The design relates to a storage container. The features of the design are those of shape and/or configuration and/or ornamentation.

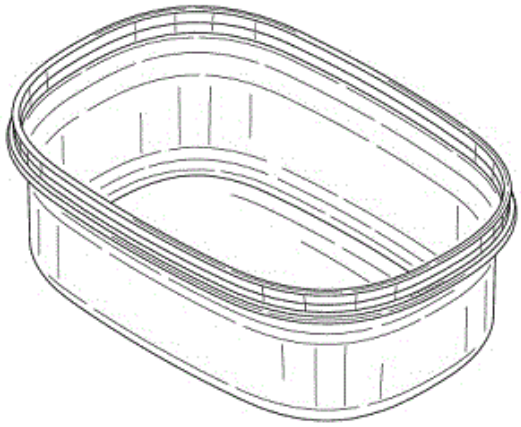

TOP, FRONT AND LEFT SIDE PERSPECTIVE VIEW OF FIRST EMBODIMENT

21: A2022/00639 22: 2022-06-09 23:
43: 2023-08-10
52: Class 12. 24: Part A
71: WIRTGEN GMBH
33: EM 31: 008792428-0004 32: 2021-12-09
54: Conveyor Belt
57: The design relates to a conveyor belt. The features of the design are those of shape and/or configuration and/or pattern.

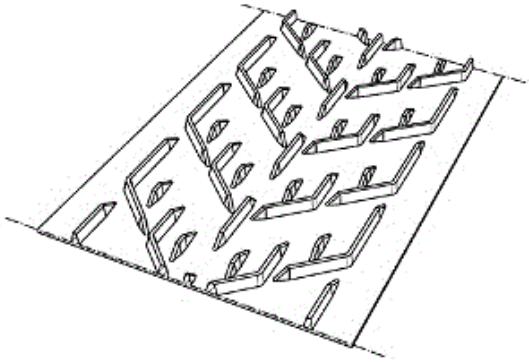

FIRST PERSPECTIVE VIEW

21: A2022/00682 22: 2022-06-17 23:
43: 2021-12-20
52: Class 28 24: Part A
71: Koninklijke Philips N.V.
33: EM(NL) 31: 008804389 32: 2021-12-20
54: COMBS FOR TRIMMERS
57: The design is for a comb for a trimmer, the comb comprising a generally rectangular body having a

shaft at a lower or proximal end which extends laterally between two laterally spaced apart trapezoidal members. A distal tip of each trapezoidal member protrudes outwardly. A central region of the proximal end of the shaft defines an elongate recess within which is positioned a barrel-shaped element having circumferentially spaced apart longitudinal grooves. A plurality of spaced-apart elongate tines project from the shaft between the trapezoidal members. An innermost surface of the body includes a cap that defines a recess to accommodate the barrel and slants downwardly to meet the tips of the trapezoidal members.

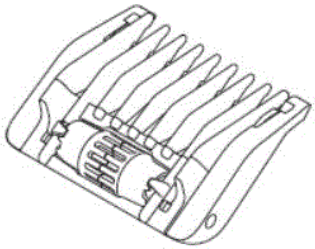

Figure 1

Three-dimensional view

21: A2022/00701 22: 2022-06-22 23:
43: 2021-12-23
52: Class 28 24: Part A
71: Koninklijke Philips N.V.
33: EM(NL) 31: 008807101-0001 32: 2021-12-23
54: SHAVERS
57: The design is for a shaver, in particular for an indicator that is applied to a surface of a blade of the shaver. The indicator includes a surface pattern that initially comprises crosshatching which gradually transitions and fades, more in the centre, during use of the blade. An eject symbol is arranged to appear gradually at the centre of the surface as the crosshatching pattern fades, until the eject symbol appears boldly and is clearly visible on the indicator.

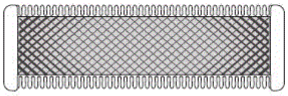

Figure 1
Front view

21: A2022/00702 22: 2022-06-22 23:
43: 2021-12-23
52: Class 32 24: Part A
71: Koninklijke Philips N.V.
33: EM(NL) 31: 008808182-0002 32: 2021-12-23
54: SURFACE PATTERNS
57: The design is for a surface pattern that is applied to a surface of a blade of a shaver. The surface pattern initially comprises crosshatching which gradually transitions and fades, more in the centre, during use of the blade. An eject symbol is arranged to appear gradually at the centre of the surface as the crosshatching pattern fades, until the eject symbol appears boldly and is clearly visible on the surface.

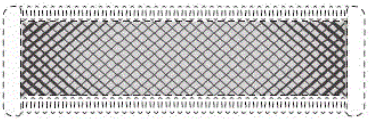

Figure 1
Front view

21: A2022/00703 22: 2022-06-22 23:
43: 2021-12-23
52: Class 28 24: Part A
71: Koninklijke Philips N.V.
33: EM(NL) 31: 008807101-0003 32: 2021-12-23
54: SHAVERS
57: The design is for a shaver, in particular for an indicator that is applied to a surface of a blade of the shaver. The indicator includes a surface pattern that initially comprises cross hatching which gradually transitions and fades, more in the centre, during use of the blade. A centrally arranged line appears gradually at the surface as the crosshatching pattern fades, until the centrally arranged line appears boldly and is clearly visible on the indicator.

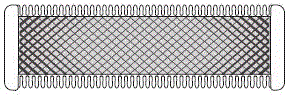

Figure 1
Front view

21: A2022/00704 22: 2022-06-22 23:
43: 2021-12-23
52: Class 28 24: Part A
71: Koninklijke Philips N.V.
33: EM(NL) 31: 008807101-0005 32: 2021-12-23
54: SHAVERS

57: The design is for a shaver, in particular for an indicator that is applied to a surface of a blade of the shaver. The indicator includes a surface pattern that initially comprises crosshatching which gradually transitions and fades, more in the centre, during use of the blade. A caution symbol (an exclamation mark inside a triangle) is arranged to appear gradually at the centre of the surface as the crosshatching pattern fades, until the caution symbol appears boldly and is clearly visible on the indicator.

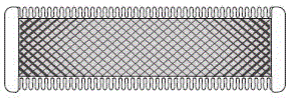

Figure 1
Front view

21: A2022/00705 22: 2022-06-22 23:
43: 2021-12-23
52: Class 28 24: Part A
71: Koninklijke Philips N.V.
33: EM(NL) 31: 008807101-0007 32: 2021-12-23
54: SHAVERS
57: The design is for a shaver, in particular for an indicator that is applied to a surface of a blade of the shaver. The indicator includes a surface pattern that initially comprises only crosshatching or chequering. An eject symbol is arranged to appear gradually at the centre of the surface during use of the blade, until the eject symbol appears boldly and is clearly visible on the indicator.

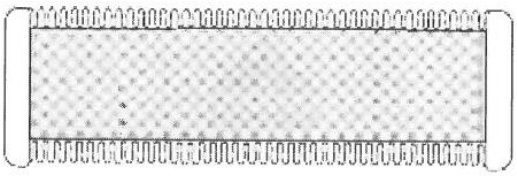

Figure 1
Front view

21: A2022/00706 22: 2022-06-22 23:
43: 2021-12-23
52: Class 32 24: Part A
71: Koninklijke Philips N.V.
33: EM(NL) 31: 008808182-0004 32: 2021-12-23
54: SURFACE PATTERNS
57: The design is for a surface pattern that is applied to a surface of a blade of a shaver. The surface pattern initially comprises a cross hatching which gradually transitions and fades, more in the centre, during use of the blade. A centrally arranged line appears gradually at the surface as the crosshatching pattern fades, until the centrally arranged line appears boldly and is clearly visible on the surface.

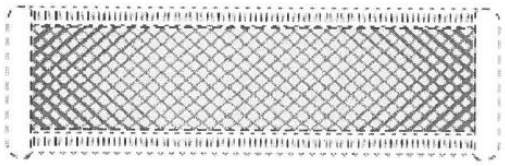

Figure 1
Front view

21: A2022/00707 22: 2022-06-22 23:
43: 2021-12-23
52: Class 32 24: Part A
71: Koninklijke Philips N.V.
33: EM(NL) 31: 008808182-0006 32: 2021-12-23
54: SURFACE PATTERNS
57: The design is for a surface pattern that is applied to a surface of a blade of the shaver. The surface pattern initially comprises a crosshatching which gradually transitions and fades, more in the centre, during use of the blade. A caution symbol (an exclamation mark inside a triangle) is arranged to appear gradually at the centre of the surface as the crosshatching pattern fades, until the caution symbol appears boldly and is clearly visible on the indicator.

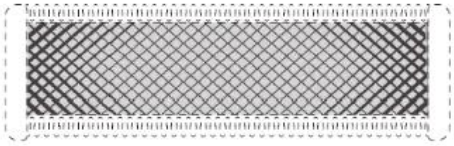

Figure 1
Front view

21: A2022/00708 22: 2022-06-22 23:
43: 2021-12-23
52: Class 32 24: Part A
71: Koninklijke Philips N.V.
33: EM(NL) 31: 008808182-0008 32: 2021-12-23
54: SURFACE PATTERNS
57: The design is for a surface pattern that is applied to a surface of a blade of a shaver. The surface

pattern comprises only crosshatching or chequering. An eject symbol is arranged to appear gradually at the centre of the surface during use of the blade, until the eject symbol appears boldly and is clearly visible on the surface.

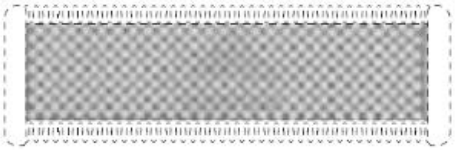

Figure 1
Front view

21: A2022/00734 22: 2022-06-24 23:
43: 2023-08-14
52: Class 07 24: Part A
71: BLUE GEAR IMPORTS (PTY) LTD
54: BARBEQUE
57: The design is applied to a barbeque. The features of the design for which protection is claimed are those of the shape and/or configuration and/or pattern of the barbeque, substantially as illustrated in the accompanying representation.

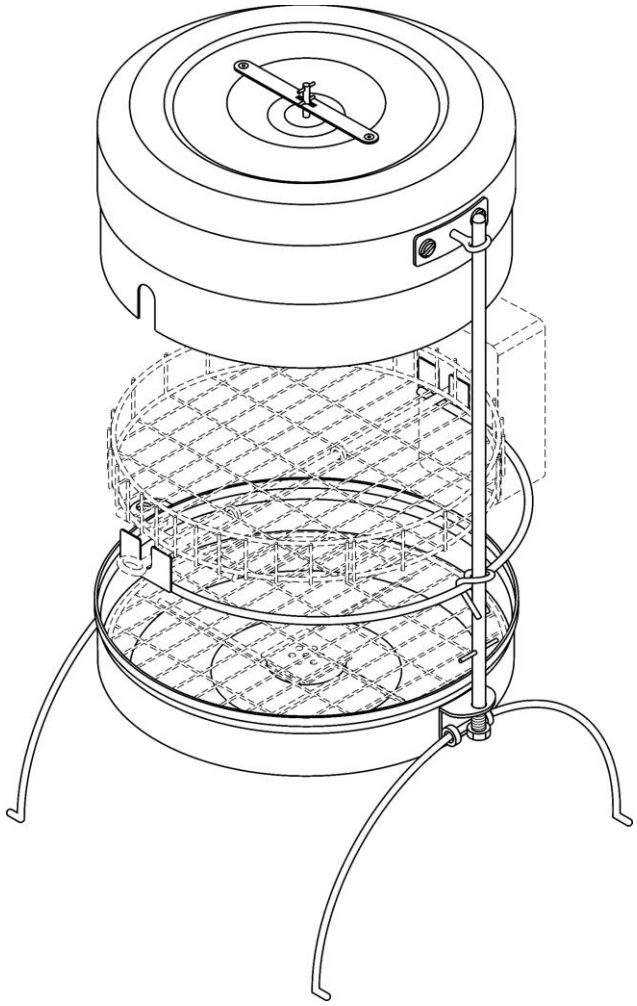

21: A2022/00910 22: 2022-08-10 23:
43: 2022-02-11
52: Class 09 24: Part A
71: Johnson & Johnson Consumer Inc.
33: US 31: 29/826,352 32: 2022-02-11
54: GRAPHIC DESIGNS FOR PRODUCT PACKAGING
57: The design is for an image graphic associated with instructional language regarding product use. The image graphic shows “Fill Line” and its positioning on the dilution container as well as the poured fluid - in the form of shaped droplets – for use in achieving the instructed user dilution.



Figure 1

Three-dimensional view

21: A2022/00915 22: 2022-08-10 23:
43: 2022-02-11
52: Class 14 24: Part A
71: Johnson & Johnson Consumer Inc.
33: US 31: 29/826,352 32: 2022-02-11
54: GRAPHIC DESIGNS FOR PRODUCT PACKAGING
57: The design is for an image graphic associated with instructional language regarding product use. The image graphic shows “Fill Line” and its positioning on the dilution container as well as the poured fluid - in the form of shaped droplets – for use in achieving the instructed user dilution.



Figure 1

Three-dimensional view

21: A2022/00916 22: 2022-08-10 23:
43: 2022-02-11
52: Class 19 24: Part A
71: Johnson & Johnson Consumer Inc.
33: US 31: 29/826,352 32: 2022-02-11
54: GRAPHIC DESIGNS FOR PRODUCT PACKAGING
57: The design is for an image graphic associated with instructional language regarding product use. The image graphic shows “Fill Line” and its positioning on the dilution container as well as the poured fluid - in the form of shaped droplets – for use in achieving the instructed user dilution.



Figure 1

Three-dimensional view

21: A2022/00917 22: 2022-08-10 23:
43: 2022-02-11
52: Class 32 24: Part A
71: Johnson & Johnson Consumer Inc.
33: US 31: 29/826,352 32: 2022-02-11
54: GRAPHIC DESIGNS FOR PRODUCT PACKAGING
57: The design is for an image graphic associated with instructional language regarding product use. The image graphic shows “Fill Line” and its positioning on the dilution container as well as the poured fluid - in the form of shaped droplets – for use in achieving the instructed user dilution.



Figure 1

Three-dimensional view

21: A2022/00931 22: 2022-08-15 23:
43: 2022-02-16
52: Class 24 24: Part A
71: Essity Hygiene and Health Aktiebolag
33: EM(SE) 31: 008861397-0001 32: 2022-02-16
54: SANITARY ARTICLES
57: The design is for a sanitary article comprising an elongate surface with a centrally disposed Y-shaped absorbent area including a column of three spaced apart circular elements. A lower elongate U-shaped element is provided below the Y-shaped absorbent area and has an inner border of dots and an

arrangement of dots in five curved patterns is positioned around it. The Y-shaped absorbent area is surrounded by a plurality of circular elements and a curved arrangement of dots is positioned above it.

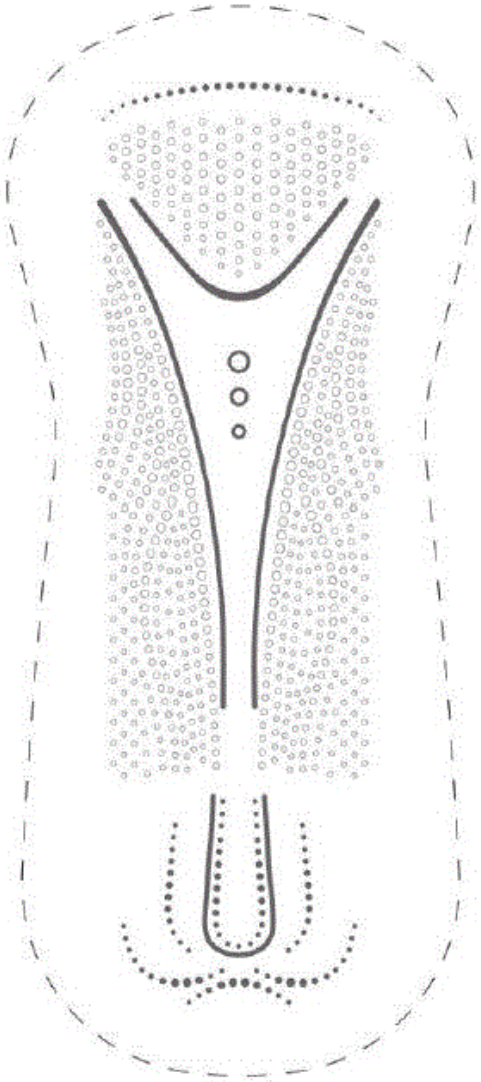

Sole figure

Front view

21: A2022/00932 22: 2022-08-15 23:
43: 2022-02-16
52: Class 24 24: Part A
71: Essity Hygiene and Health Aktiebolag
33: EM(SE) 31: 008861397-0005 32: 2022-02-16
54: SANITARY ARTICLES
57: The design is for a sanitary article comprising an elongate surface with a tapered waist. An upper portion of the surface includes a diamond-shaped arrangement of dots bordered on each side by a curved row of dots. A curved V-shaped absorbent area with a column of three spaced apart circular elements is centrally positioned. A lower portion of the surface is convexly curved with a central inward kink. The lower portion includes an inner periphery of dots and three curved arrangements of dots below it.

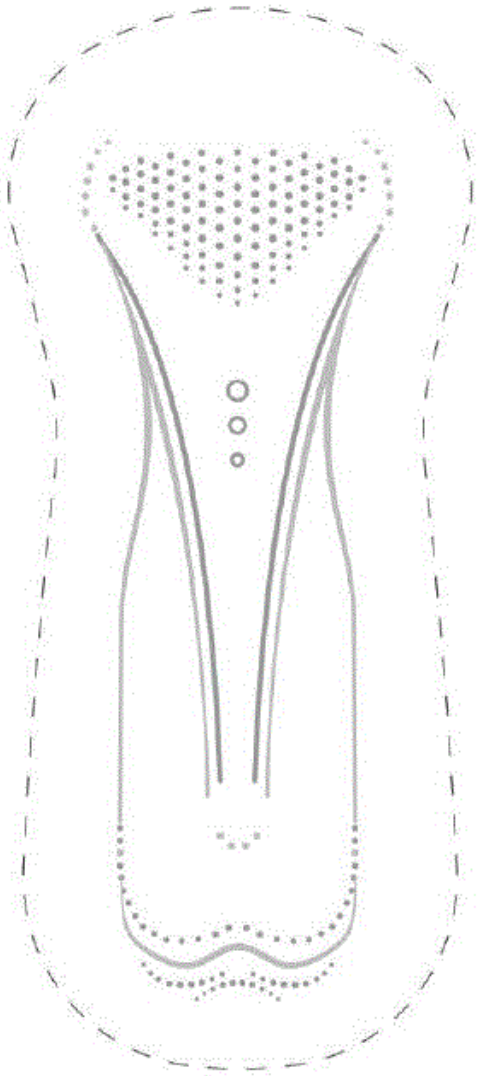

Sole figure

Front view

21: A2022/00933 22: 2022-08-15 23:
43: 2022-02-16

52: Class 24 24: Part A
71: Essity Hygiene and Health Aktiebolag
33: EM(SE) 31: 008861397-0007 32: 2022-02-16
54: SANITARY ARTICLES
57: The design is for a sanitary article and comprises a curved V-shaped absorbent area with a column of three spaced apart circular elements and a plurality of dots. A diamond-shaped area comprising a plurality of dots is positioned above the V-shaped absorbent area with a border of curved lines and dots. A lower portion of the surface is convexly curved with a central inward kink with curved arrangements of dots above and below it.

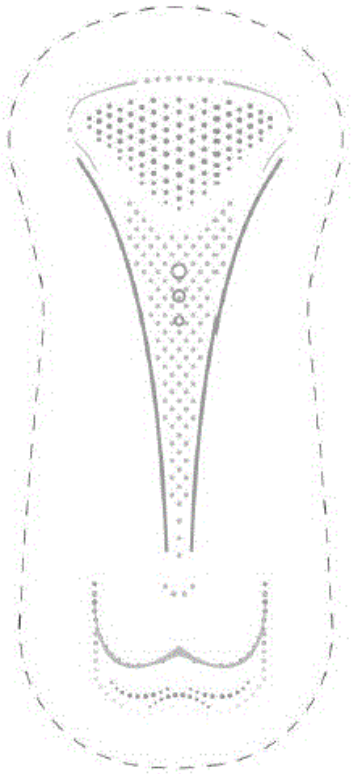

Sole figure

Front view

21: A2022/00934 22: 2022-08-15 23:
43: 2022-02-16
52: Class 24 24: Part A
71: Essity Hygiene and Health Aktiebolag
33: EM(SE) 31: 008861397-0011 32: 2022-02-16
54: SANITARY ARTICLES
57: The design is for a sanitary article and comprises an elongate absorbent area with a tapered waist and curved corners. An upper end of the absorbent area includes a pair of curved arrangements of dots. Each side wall of the absorbent area at a lower portion is interrupted and includes a dot. A bottom end of the absorbent area is convexly curved with a central inward kink. An elongate area with inwardly tapered sides is centrally positioned and includes a concavely curved arrangement of four dots at its bottom portion.

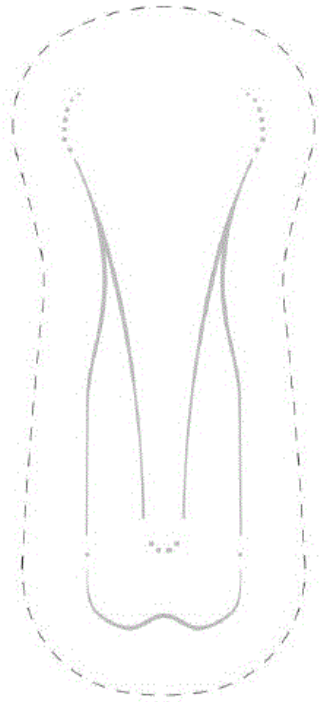

Sole figure

Front view

21: A2022/00935 22: 2022-08-15 23:
43: 2022-02-16
52: Class 24 24: Part A
71: Essity Hygiene and Health Aktiebolag
33: EM(SE) 31: 008861397-0013 32: 2022-02-16
54: SANITARY ARTICLES
57: The design is for a sanitary article and comprises an elongate absorbent area with a convexly curved upper end that includes dots, a centrally positioned V-shaped area comprising a plurality of dots, and a convexly curved bottom end with a central inward kink. A pair of curved arrangements of dots extends downwardly from its bottom end. A concavely curved arrangement of four dots is positioned below the V-shaped area.

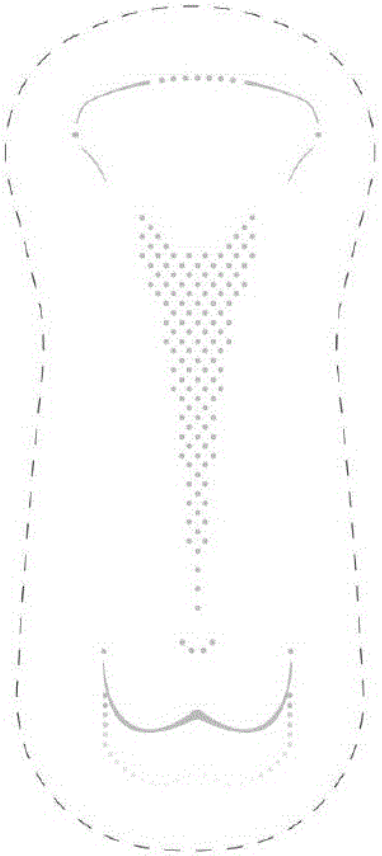

Sole figure

Front view

21: A2022/00936 22: 2022-08-15 23:
43: 2022-02-16
52: Class 24 24: Part A
71: Essity Hygiene and Health Aktiebolag
33: EM(SE) 31: 008861397-0017 32: 2022-02-16
54: SANITARY ARTICLES
57: The design is for a sanitary article and comprises an elongate body with a rounded top and bottom wall and side walls that taper inwardly at a waist. The body includes an elongate absorbent area with rounded top and bottom ends and sides that thicken as they taper inwardly at a waist. A portion of the sides includes an inner border of dots. The bottom end includes a central inward kink. The absorbent area includes a Y-shaped area that includes a column of three dots and has an outer border of dots with a curved bottom portion. A diamond-shaped arrangement of dots is positioned above the Y-shaped area. A pattern of lobed petals or leaves with dots interspersed is positioned at the top and bottom ends of the absorbent area and at a side wall of the body.



Sole figure

Front view

21: A2022/00937 22: 2022-08-15 23:
43: 2022-02-16
52: Class 24 24: Part A
71: Essity Hygiene and Health Aktiebolag
33: EM(SE) 31: 008861397-0019 32: 2022-02-16
54: SANITARY ARTICLES
57: The design is for a sanitary article and comprises an elongate body with a rounded top and bottom wall and side walls that taper inwardly at a waist. The body includes an elongate absorbent area with rounded top and bottom ends and sides that thicken as they taper inwardly at a waist. A portion of the sides includes an inner border of dots. The bottom end includes a central inward kink. The absorbent area includes a Y-shaped area that includes a column of three dots and has an outer border of dots with a curved bottom portion. A diamond-shaped arrangement of dots is positioned above the Y-shaped area. A pattern of lobed petals or leaves with dots interspersed is positioned at the top and bottom

ends of the absorbent area and at a side wall of the body.



Sole figure

Front view

21: A2022/00938 22: 2022-08-15 23:
43: 2022-02-16
52: Class 32 24: Part A
71: Essity Hygiene and Health Aktiebolag
33: EM(SE) 31: 008861397-0017 32: 2022-02-16
54: ORNAMENTATION
57: The design is for a sanitary article and comprises an elongate body with a rounded top and bottom wall and side walls that taper inwardly at a waist. The body includes an elongate absorbent area with rounded top and bottom ends and sides that thicken as they taper inwardly at a waist. A portion of the sides includes an inner border of dots. The bottom end includes a central inward kink. The absorbent area includes a Y-shaped area that includes a column of three dots and has an outer border of dots with a curved bottom portion. A diamond-shaped arrangement of dots is positioned above the Y-shaped area. A pattern of lobed petals or leaves with dots interspersed is positioned at the top and bottom ends of the absorbent area and at a side wall of the body.



Sole figure

Front view

21: A2022/00939 22: 2022-08-15 23:
43: 2022-02-16
52: Class 32 24: Part A
71: Essity Hygiene and Health Aktiebolag
33: EM(SE) 31: 008861397-0019 32: 2022-02-16
54: ORNAMENTATION
57: The design is for a sanitary article and comprises an elongate body with a rounded top and bottom wall and side walls that taper inwardly at a waist. The body includes an elongate absorbent area with rounded top and bottom ends and sides that thicken as they taper inwardly at a waist. A portion of the sides includes an inner border of dots. The bottom end includes a central inward kink. The absorbent area includes a Y-shaped area that includes a column of three dots and has an outer border of dots with a curved bottom portion. A diamond-shaped arrangement of dots is positioned above the Y-shaped area. A pattern of lobed petals or leaves with

dots interspersed is positioned at the top and bottom ends of the absorbent area and at a side wall of the body.



Sole figure

Front view

21: A2022/01212 22: 2022-10-06 23:
43: 2023-09-12
52: Class 23 24: Part A
71: HANSGROHE SE
33: EU 31: 008942106-0003 32: 2022-04-19
54: WASHBASIN
57: The novelty of the design resides in the shape or configuration of a washbasin substantially as shown in the accompanying representation.



21: A2022/01407 22: 2022-11-08 23:
43: 2022-05-09
52: Class 31 24: Part A
71: La Marzocco S.r.l.
33: EM(IT) 31: 009016835-0001 32: 2022-05-09
54: COFFEE MACHINES
57: The design is for a coffee machine including a parallelepiped body comprising a front wall, a rear wall, side walls, a roof and a base with legs. Lower portions of the front wall, side walls and rear wall taper inwardly defining an upper overhang at the side walls and rear wall. The overhang at the side walls inclines rearwardly upwardly. A rectangular element protrudes from a top portion of the front wall and includes a central elongate member with horizontal slats and a protruding C-shaped member, flanked by a pair of cylindrical dials. An S-shaped frother, a cylindrical element and a rectangular element extend downwardly from a bottom surface of the rectangular element. A lower portion of the front wall includes a pair of round operating buttons. A rectangular tray projects forwardly from the base. A side of the base includes a power switch. The roof includes two rectangular, spaced apart arrangements of horizontal vents.

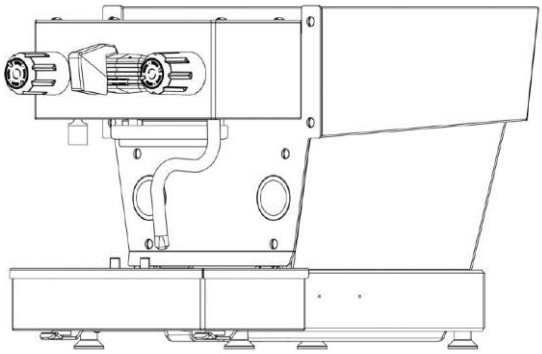

Figure 1

Three-dimensional view

21: A2022/01408 22: 2022-11-08 23:
43: 2022-05-09
52: Class 31 24: Part A
71: La Marzocco S.r.l.
33: EM(IT) 31: 009016835-0009 32: 2022-05-09
54: COFFEE MACHINES
57: The design is for a coffee machine including a parallelepiped body comprising a front wall, a rear wall, side walls, a roof and a base with legs. Lower portions of the front wall, side walls and rear wall taper inwardly defining an upper overhang at the side walls and rear wall. The overhang at the side walls inclines rearwardly upwardly. A rectangular element protrudes from a top portion of the front wall and includes a row of rectangular operating buttons, a round element and a pair of cylindrical dials. Two elongate frothers, a cylindrical element and three flanged elements extend downwardly from a bottom surface of the rectangular element. A lower portion of the front wall includes an operating switch. A rectangular tray projects forwardly from the base. The roof includes spaced apart arrangements of horizontal vents.

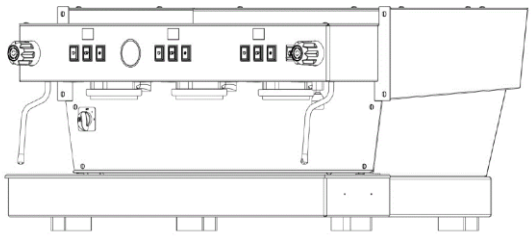

Figure 1

Three-dimensional view

21: A2022/01409 22: 2022-11-08 23:
43: 2022-05-09
52: Class 31 24: Part A
71: La Marzocco S.r.l.
33: EM(IT) 31: 009016835-0010 32: 2022-05-09
54: COFFEE MACHINES
57: The design is for a coffee machine including a parallelepiped body comprising a front wall, a rear wall, side walls, a roof and a base with legs. Lower portions of the front wall, side walls and rear wall taper inwardly defining an upper overhang at the side walls and rear wall. The overhang at the side walls inclines rearwardly upwardly. A rectangular element protrudes from a top portion of the front wall and includes a row of three spaced-apart rectangular operating buttons, a round element and a pair of cylindrical dials. Two elongate frothers, a cylindrical element and three flanged elements extend downwardly from a bottom surface of the rectangular element. A lower portion of the front wall includes an operating switch. A rectangular tray projects forwardly from the base. The roof includes spaced apart arrangements of horizontal vents.

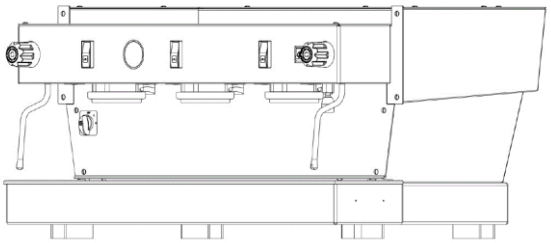

Figure 1

Three-dimensional view

21: A2022/01624 22: 2022-12-13 23:
43: 2022-06-14
52: Class 24 24: Part A
71: Cilag GmbH International
33: US 31: 29/842,581 32: 2022-06-14
54: LINEAR SURGICAL STAPLERS
57: The design is for a surgical stapler. The surgical stapler includes oppositely disposed first and second major shrouds housing a stapling assembly. Each of the first and second major shrouds are generally elongate and have a pronounced curved portion which joins into a minor shroud portion. The first and second major shrouds each have a textured outer surface for facilitating gripping. A pair of elongate jaws extend forwardly from each of the minor shrouds. Each of the jaws terminates in an inclined pointed end. Each jaw includes channels accommodating staples. An upright slider member is provided substantially at the center of one side of the first and second major shrouds and a rectangular

slider member is provided at the rear on the other side of the first and second major shrouds.

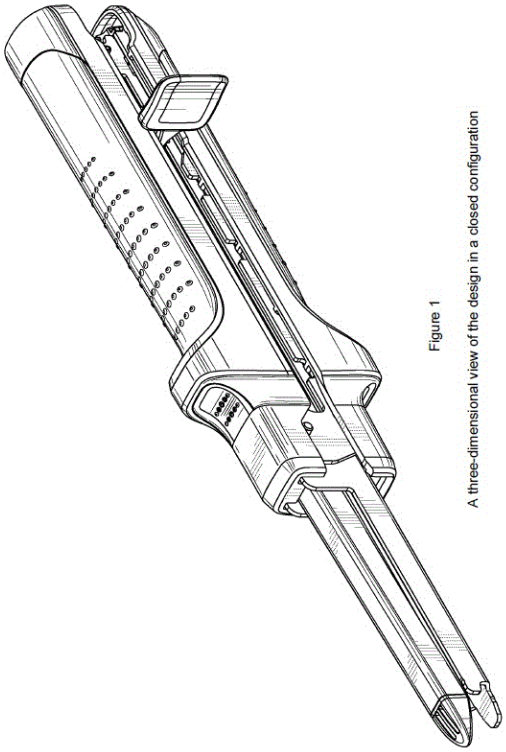

Figure 1

A three-dimensional view of the design in a closed configuration

21: A2022/01625 22: 2022-12-13 23:
43: 2022-06-14
52: Class 24 24: Part A
71: Cilag GmbH International
33: US 31: 29/842,581 32: 2022-06-14

54: LINEAR SURGICAL STAPLERS

57: The design is for a surgical stapler. The surgical stapler includes oppositely disposed first and second major shrouds housing a stapling assembly. Each of the first and second major shrouds are generally elongate and have a pronounced curved portion which joins into a minor shroud portion. The first and second major shrouds each have a textured outer surface for facilitating gripping. A pair of elongate jaws extend forwardly from each of the minor shrouds. Each of the jaws terminates in an inclined pointed end. Each jaw includes channels accommodating staples. An upright slider member is provided substantially at the center of one side of the first and second major shrouds and a rectangular slider member is provided at the rear on the other side of the first and second major shrouds.

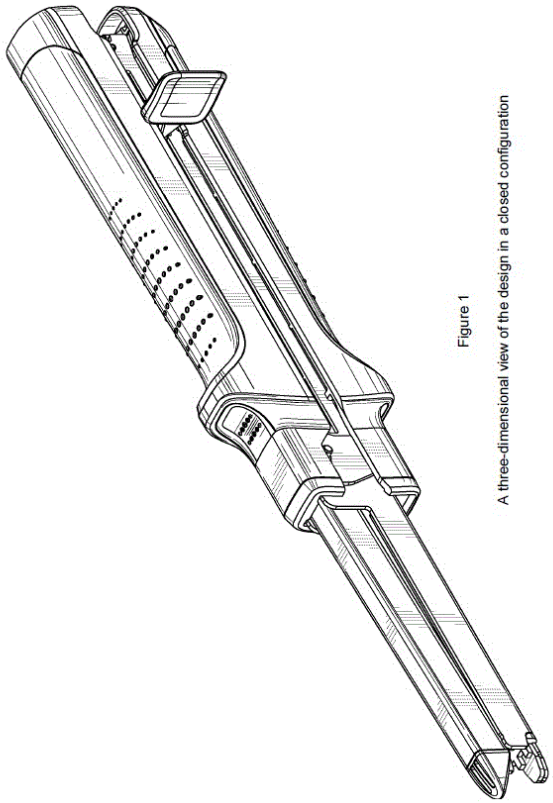

Figure 1

A three-dimensional view of the design in a closed configuration

21: A2022/01626 22: 2022-12-13 23:
43: 2022-06-14
52: Class 24 24: Part A
71: Cilag GmbH International
33: US 31: 29/842,581 32: 2022-06-14

54: SURGICAL STAPLERS

57: The design is for a surgical stapler. The surgical stapler includes oppositely disposed first and second major shrouds housing a stapling assembly. Each of the first and second major shrouds are generally elongate and have a pronounced curved portion which joins into a minor shroud portion. The first and second major shrouds each have a textured outer surface for facilitating gripping.

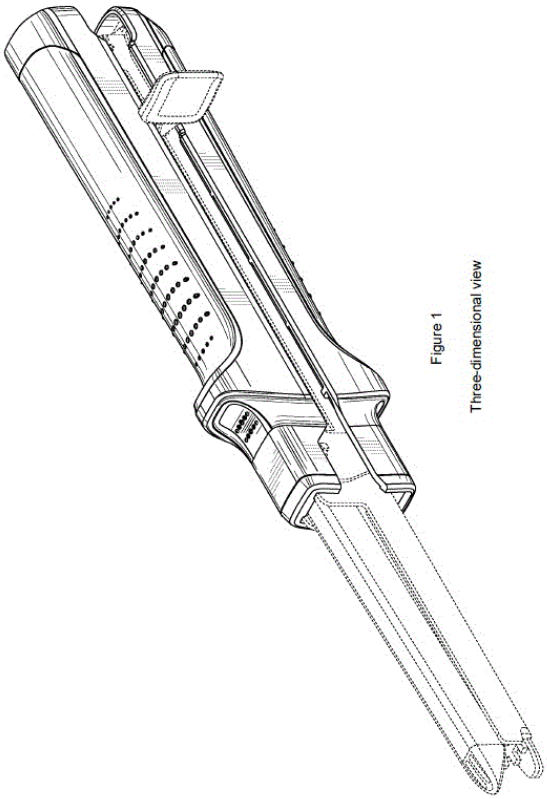

21: A2022/01627 22: 2022-12-13 23:
43: 2022-06-14
52: Class 24 24: Part A
71: Cilag GmbH International
33: US 31: 29/842,581 32: 2022-06-14
54: LINEAR SURGICAL STAPLERS
57: The design is for a surgical stapler. The surgical stapler includes oppositely disposed first and second major shrouds housing a stapling assembly. Each of the first and second major shrouds are generally elongate and have a pronounced curved portion which joins into a minor shroud portion. The first and second major shrouds each have a textured outer surface for facilitating gripping. A pair of elongate jaws extend forwardly from each of the minor shrouds. Each of the jaws terminates in an inclined pointed end. Each jaw includes channels accommodating staples. An upright slider member is provided substantially at the center of one side of the first and second major shrouds and a rectangular slider member is provided at the rear on the other side of the first and second major shrouds.

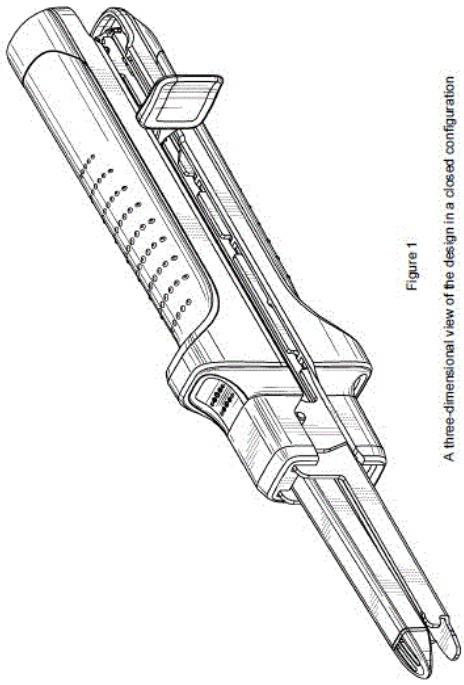

21: A2022/01650 22: 2022-12-15 23:
43: 2022-06-28
52: Class 14 24: Part A
71: Cilag GmbH International
33: US 31: 29/844,350 32: 2022-06-28
54: USER INTERFACES
57: The design is for a user interface comprising two rows of four rectangles. Corresponding rectangles in the respective rows are of equal width with a first rectangle being the narrowest, second and third rectangles being the widest and of equal width and the fourth rectangle being wider than the first. The second and third rectangles include a central vertical line. The second rectangle of a top row, and first and third rectangle of a bottom row include a rectangular graphic. The fourth rectangle of the bottom row includes a teardrop graphic. In a first view each rectangle and a top corner include a shoe graphic . In a second, third and fourth view the first and fourth rectangle include a hand graphic and text. A second and third rectangle include an alert graphic and text. In the second view the top corner includes the shoe graphic and a tray graphic with text in a speech-bubble.

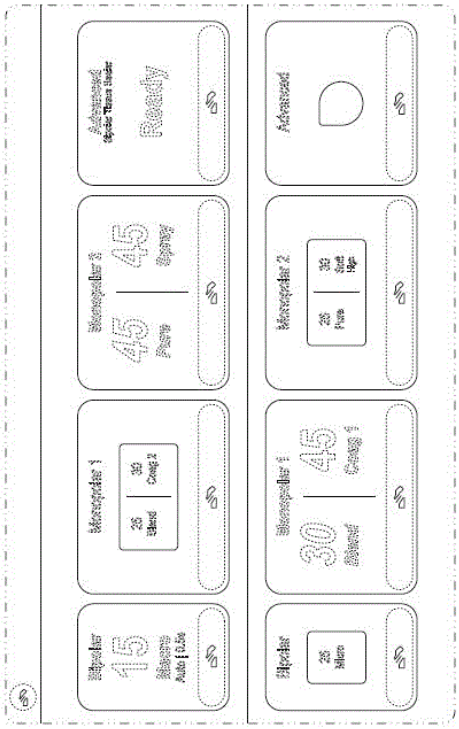

Figure 1

First face-on view

21: A2022/01651 22: 2022-12-15 23:
43: 2022-06-28
52: Class 14 24: Part A
71: Cilag GmbH International
33: US 31: 29/844,353 32: 2022-06-28

54: USER INTERFACES

57: The design is for a user interface for Profiles as shown in the drawing. The user interface includes a horizontal search bar at the top having a text entry field on the left with three search toggles, namely an A-Z toggle which is indicated as selected by an oval surround, a Department toggle, and a Surgeon toggle. An Add/Manage button is provided on the right of the Surgeon toggle. A close “X” button is provided above the Add/Manage button. Below a search bar is provided search results, grouped alphabetically. A star icon is provided on the right of each of the search results. A vertical slider is provided on the far right of the user interface.



Figure 1

Face-on view

21: A2022/01652 22: 2022-12-15 23:
43: 2022-06-28
52: Class 14 24: Part A
71: Cilag GmbH International
33: US 31: 29/844,350 32: 2022-06-28

54: USER INTERFACES

57: The design is for a user interface on a display screen and comprises two rows of four rectangles each with curved corners. Corresponding rectangles in the respective rows are of equal width with a first rectangle being the narrowest, second and third rectangles being the widest and of equal width and the fourth rectangle being wider than the first. The second and third rectangles include a central vertical line. A first and fourth rectangle of each row include a graphic of a hand and text. A second and third rectangle of each row includes an elongate element with an alert graphic and text. A top corner above a top row includes a graphic of a shoe and a tray graphic with text in a speech-bubble. The second rectangle of the top row, and first and third rectangle of a bottom row include a rectangular graphic.

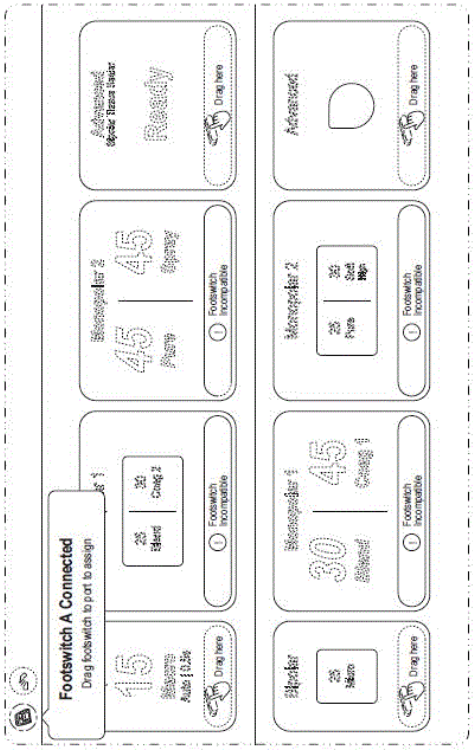

21: A2022/01653 22: 2022-12-15 23:
43: 2022-06-28
52: Class 14 24: Part A
71: Cilag GmbH International
33: US 31: 29/844,350 32: 2022-06-28

54: USER INTERFACES

57: The design is for a user interface on a display screen and comprises two rows of four rectangles each with curved corners. Corresponding rectangles in the respective rows are of equal width with a first rectangle being the narrowest, second and third rectangles being the widest and of equal width and the fourth rectangle being wider than the first. The second and third rectangles include a central vertical line. The first and fourth rectangle of each row include a graphic of a hand and text. The second and third rectangle of each row include an elongate element with an alert graphic and text. The second rectangle of a top row, and first and third rectangle of a bottom row include a rectangular graphic. The fourth rectangle of the bottom row includes a teardrop graphic. A top corner above the top row includes the hand graphic with a tray graphic below.

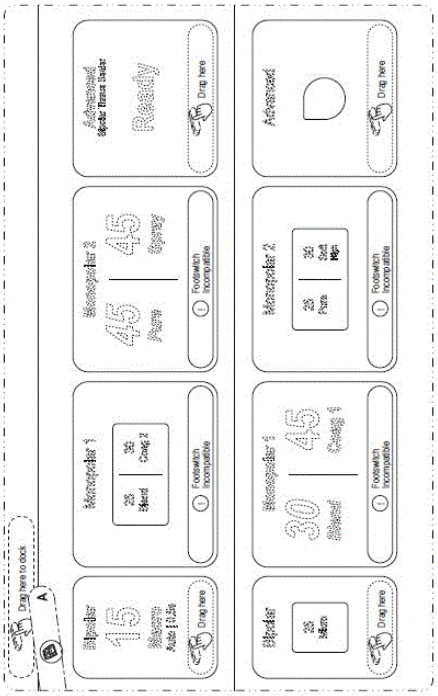

21: A2022/01654 22: 2022-12-15 23:
43: 2022-06-28
52: Class 14 24: Part A
71: Cilag GmbH International
33: US 31: 29/844,350 32: 2022-06-28

54: USER INTERFACES

57: The design is for a user interface and comprises two rows of four rectangles each with curved corners. Corresponding rectangles in the respective rows are of equal width with a first rectangle being the narrowest, second and third rectangles being the widest and of equal width and the fourth rectangle being wider than the first. The second and third rectangles include a central vertical line. The first and fourth rectangle of each row include a graphic of a hand with a finger in a pressing motion and text. The second and third rectangle of each row include an elongate element with an alert graphic and text. The second rectangle of a top row, and first and third rectangle of a bottom row include a rectangular graphic. A top corner above the top row includes the hand graphic. A tray graphic hovers over the first rectangle of the top row.

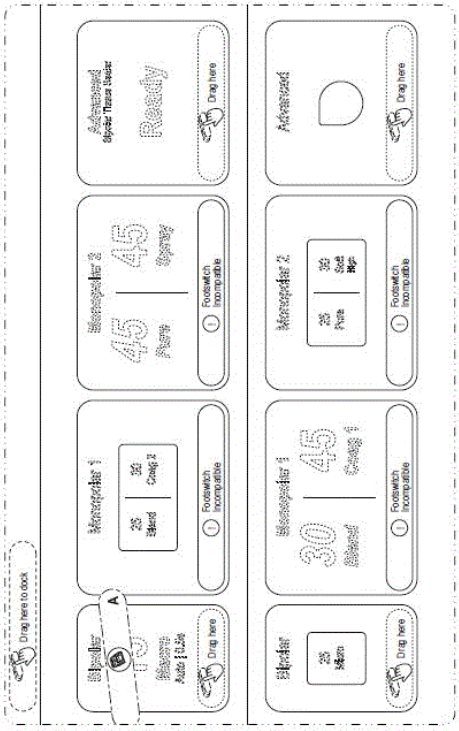

Figure 1
Face-on view

21: A2022/01655 22: 2022-12-15 23:
43: 2022-06-28
52: Class 14 24: Part A
71: Cilag GmbH International
33: US 31: 29/844,350 32: 2022-06-28
54: USER INTERFACES
57: The design is for a user interface and comprises two rows of four rectangles each with curved corners. Corresponding rectangles in the respective rows are of equal width with a first rectangle being the narrowest, second and third rectangles being the widest and of equal width and the fourth rectangle being wider than the first. The second and third rectangles include a central vertical line. The second rectangle of a top row, and first and third rectangle of a bottom row include a rectangular graphic. The fourth rectangle of the bottom row includes a teardrop graphic. Each rectangle, except a first rectangle of a top row, and a top corner above the top row include a graphic of a shoe pressing downwardly on a pentagonal element. The first rectangle of the top row includes a tray graphic.

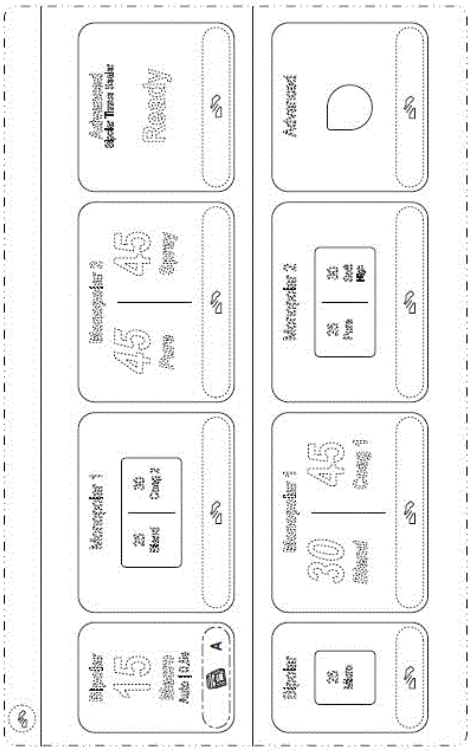

Figure 1
Face-on view

21: A2022/01658 22: 2022-12-15 23:
43: 2022-06-28
52: Class 14 24: Part A
71: Cilag GmbH International
33: US 31: 29/844,353 32: 2022-06-28
54: USER INTERFACES
57: The design is for a user interface for Profiles as shown in the drawing. The user interface includes a horizontal search bar at the top having a text entry field on the left with three search toggles, namely an A-Z toggle, a Department toggle which is indicated as selected by an oval surround, and a Surgeon toggle. An Add/Manage button is provided on the right of the Surgeon toggle. A close “X” button is provided above the Add/Manage button. Below the search bar is provided search results, listing names in alphabetical order, with levels indicated by triangular markers. A star icon is provided on the right of each/some of the search results. A vertical slider is provided on the far right of the user interface.

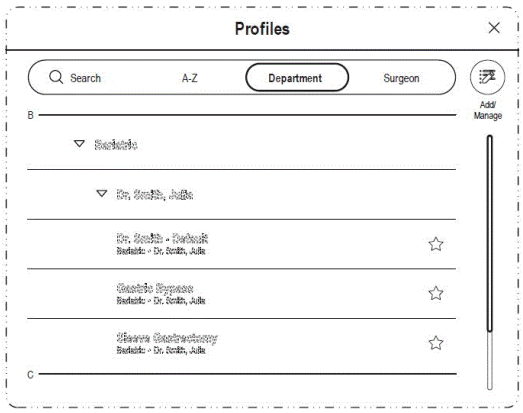

Figure 1

Face-on view

21: A2022/01659 22: 2022-12-15 23:
43: 2022-06-28
52: Class 14 24: Part A
71: Cilag GmbH International
33: US 31: 29/844,353 32: 2022-06-28
54: USER INTERFACES
57: The design is for a user interface for Profiles as shown in the drawing. The user interface includes a horizontal search bar at the top having a text entry field on the left with three search toggles, namely an A-Z toggle, a Department toggle, and a Surgeon toggle which is indicated as selected by an oval surround. An Add/Manage button is provided on the right of the Surgeon toggle. A close “X” button is provided above the Add/Manage button. Below the search bar is provided search results, grouped alphabetically with levels indicated by triangular markers. A star icon is provided on the right of each/some of the search results. A vertical slider is provided on the far right of the user interface.

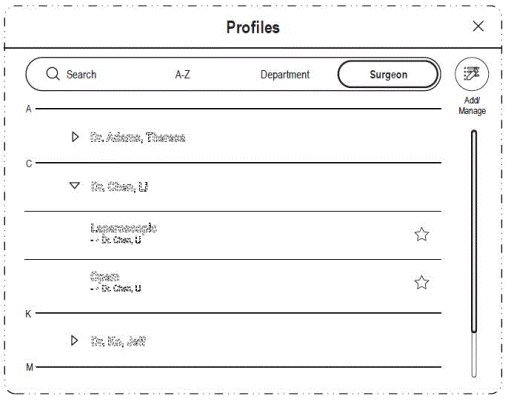

Figure 1

Face-on view

21: A2022/01660 22: 2022-12-15 23:
43: 2022-06-28
52: Class 14 24: Part A
71: Cilag GmbH International
33: US 31: 29/844,353 32: 2022-06-28
54: USER INTERFACES
57: The design is for a user interface for Profiles as shown in the drawing. The user interface includes a window comprising a horizontal search field at the top to allow a user to enter text to search for a profile, department, or a surgeon. A “Back to list” button is provided on the right of the search filed. An Add/Manage button is provided on the right of the “Back to list” button. A close “X” button is provided above the Add/Manage button. A QWERTY-type keyboard overlays a bottom of the window. A vertical slider is provided on the far right of the window.

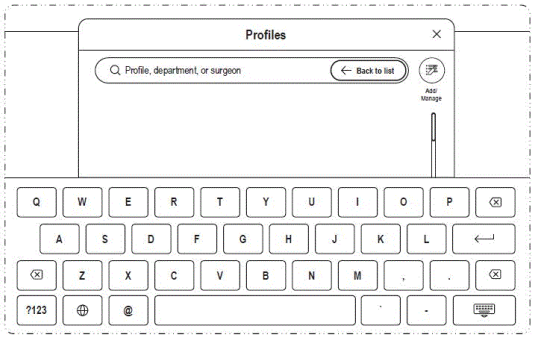

Figure 1

Face-on view

21: A2022/01661 22: 2022-12-15 23:
43: 2022-06-28
52: Class 14 24: Part A
71: Cilag GmbH International
33: US 31: 29/844,353 32: 2022-06-28
54: USER INTERFACES
57: The design is for a user interface for Profile Management as shown in the drawing. The user interface includes a horizontal options bar comprising a “Select all” check box and a series of option icons on the right of the “Select all” check box and, beneath that, a horizontal search bar having a text entry field on the left with three search toggles, namely an A-Z toggle which is indicated as selected by an oval surround, a Department toggle, and a Surgeon toggle. An Add/Manage button is provided on the right of the Surgeon toggle. A close “X” button is provided above the Add/Manage button. Below the search bar is provided search results with favourites first and then grouped alphabetically. A star icon and check box are respectively provided on the right and left of each of the search results. A vertical slider is provided on the far right of the user interface.

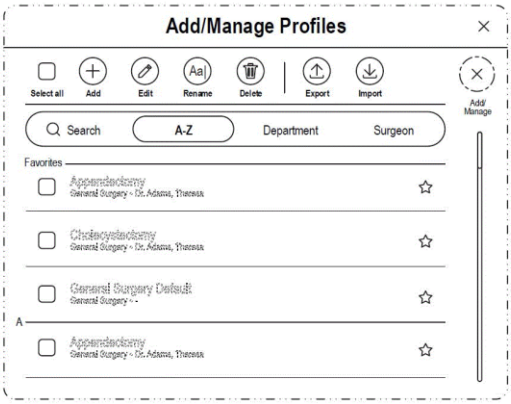

Figure 1

Face-on view

21: A2022/01662 22: 2022-12-15 23:
43: 2022-06-28
52: Class 14 24: Part A
71: Cilag GmbH International
33: US 31: 29/844,353 32: 2022-06-28

54: USER INTERFACES

57: The design is for a user interface for Profile editing as shown in the drawing. The user interface includes a top bar with editing options and, beneath that, two rows each having four spaced apart blocks. The first blocks on the left of each row are smaller than the rest of the blocks which are similarly sized but the second and third are slightly bigger than the fourth. Each block has menu fields and a "Use Footswitch" horizontal sliding toggle at the bottom. The top bar includes a Cancel icon and a Save & Exit icon. A horizontal text field embedded with a pen/pencil icon is provided at the top centre.

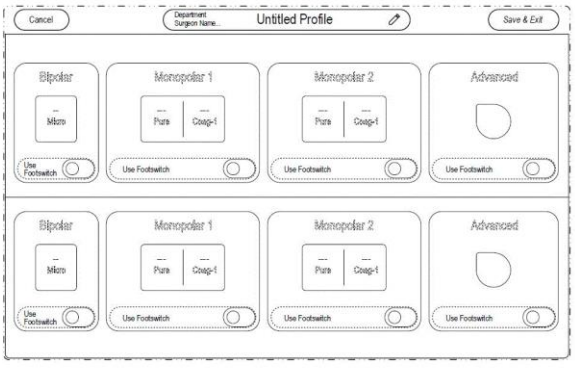

Figure 1

Face-on view

21: A2022/01663 22: 2022-12-15 23:
43: 2022-06-28
52: Class 14 24: Part A
71: Cilag GmbH International
33: US 31: 29/844,353 32: 2022-06-28

54: USER INTERFACES

57: The design is for a user interface as shown in the drawing. The user interface includes a horizontal partition line defining upper and lower portions. The upper portion has a title, a value display area, and minus and plus icons provided beneath the value display area. The lower portion provides a rectangular dropdown box having a dropdown solid arrow on the right, and an icon and "Macro" text on the left of the dropdown box. Below the rectangular box, on the right hand side thereof, is provided an on-off slider toggle. On the far left of the on-off slider is provided an "Autobipolar" descriptor. Below the "Autobipolar" descriptor is provided a "Delay" text. A narrow, longer horizontal slider is provided proximate the bottom, above which is provided numerical values and below which there is provided indicator icons on the left, centre, and right of the user interface.

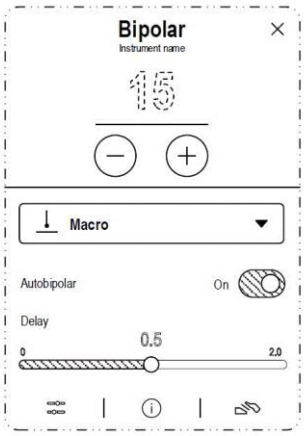

Figure 1

Face-on view

21: A2022/01664 22: 2022-12-15 23:
43: 2022-06-28
52: Class 14 24: Part A
71: Cilag GmbH International
33: US 31: 29/844,353 32: 2022-06-28

54: USER INTERFACES

57: The design is for a user interface as shown in the drawing. The user interface includes horizontal and vertical partitions lines defining four quadrants. A major title spans the upper quadrants. The upper quadrants each have a minor title area at the top, value display area and minus and plus icons provided thereunder. Below the horizontal partition line in each of the lower quadrants is provided a rectangular dropdown box having a drop-down arrow on the right, and text and an icon on the left. In the bottom right quadrant is provided an on-off slider

toggle. On the far left of the on-off slider is provided a descriptor. A series of indicator icons are provided on the bottom left, centre, and right of the user interface.

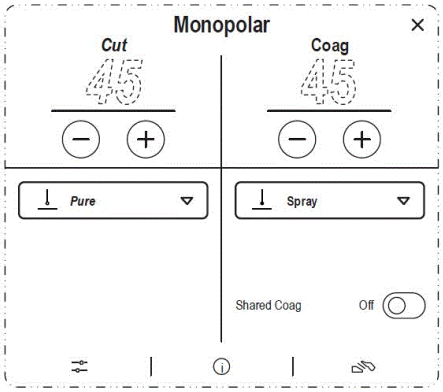

Figure 1

Face-on view

21: A2022/01665 22: 2022-12-15 23:
43: 2022-06-28
52: Class 14 24: Part A
71: Cilag GmbH International
33: US 31: 29/844,350 32: 2022-06-28
54: USER INTERFACES
57: The design is for a user interface on a display screen and comprises two rows of four rectangles each with curved corners. Corresponding rectangles in the respective rows are of equal width with a first rectangle being the narrowest, second and third rectangles being the widest and of equal width and the fourth rectangle being wider than the first. The second and third rectangles include a central vertical line. Each rectangle and a top corner above a top row include a graphic of a shoe pressing downwardly on a pentagonal element. The second rectangle of the top row, and first and third rectangle of a bottom row include a rectangular graphic. The fourth rectangle of the bottom row includes a teardrop graphic.

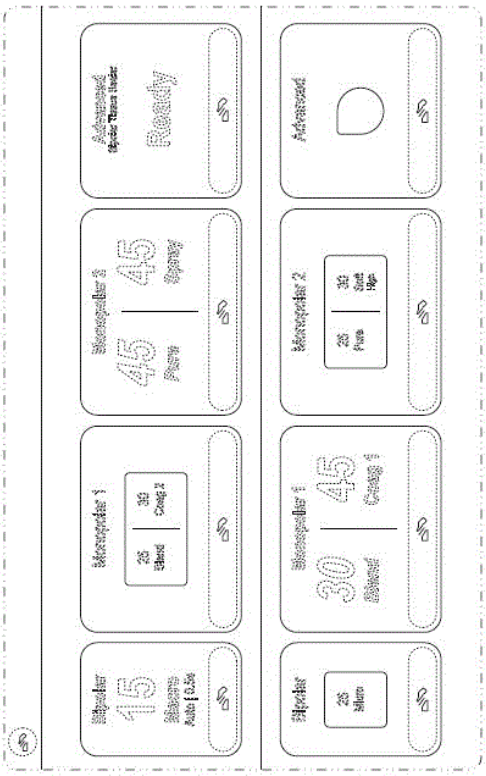

Figure 1

Face-on view

21: A2022/01672 22: 2022-12-20 23:
43: 2023-08-14
52: Class 12. 24: Part A
71: FERRARI S.P.A.
33: IB 31: DM/221724 32: 2022-06-21
54: Car
57: The design relates to a car. The features of the design are those of shape and/or configuration and/or pattern and/or ornamentation.

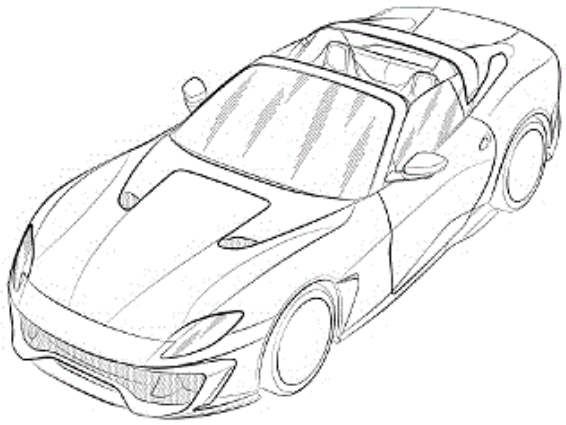

FRONT PERSPECTIVE VIEW

21: A2022/01673 22: 2022-12-20 23:
43: 2023-08-14
52: Class 21. 24: Part A
71: FERRARI S.P.A.
33: IB 31: DM/221708 32: 2022-06-21
54: Toy Car
57: The design relates to a toy car. The features of the design are those of shape and/or configuration and/or pattern and/or ornamentation.

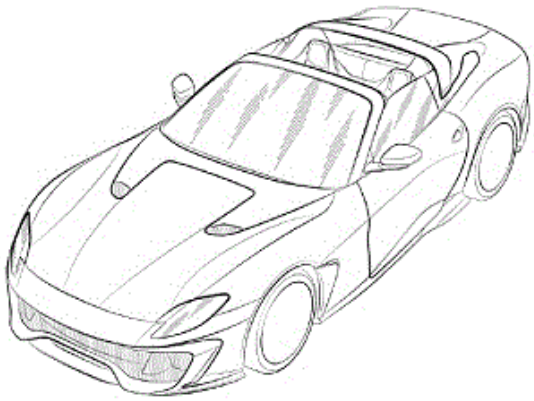

FRONT PERSPECTIVE VIEW

21: A2022/01676 22: 2022-12-21 23:
43: 2022-06-28
52: Class 15 24: Part A
71: Caterpillar Inc.
33: US 31: 29/864,929 32: 2022-06-28
54: CYLINDERS
57: The features of the design are illustrated in the overall appearance of the design. It is this overall appearance that is particular to the claimed design. This design relates to a hydraulic cylinder, which may be used for a machine such as a wheel loader.

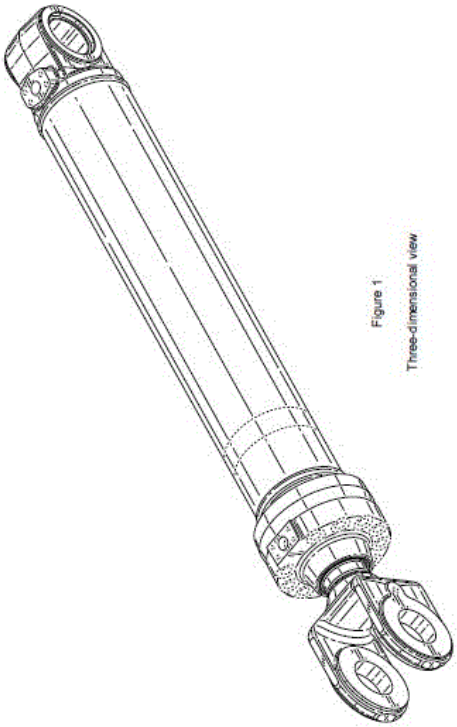

21: A2022/01677 22: 2022-12-21 23:
43: 2022-06-28
52: Class 15 24: Part A
71: Caterpillar Inc.
33: US 31: 29/864,930 32: 2022-06-28
54: CYLINDERS
57: The features of the design are illustrated in the overall appearance of the design. It is this overall appearance that is particular to the claimed design. This design relates to a hydraulic cylinder, which may be used for a machine such as a wheel loader.

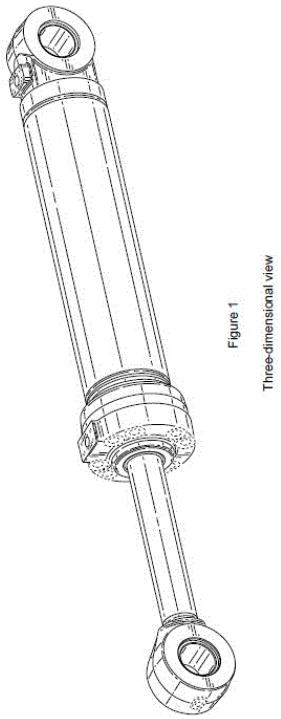

21: A2022/01684 22: 2022-12-22 23:
43: 2023-08-14
52: Class 27 24: Part A
71: PHILIP MORRIS PRODUCTS S.A.
33: EU 31: 009071939-0001 32: 2022-06-27
54: SNUS CAN
57: The design is to be applied to a snus can. The features for which protection is claimed are those of shape and/or configuration, substantially as shown in the representations.

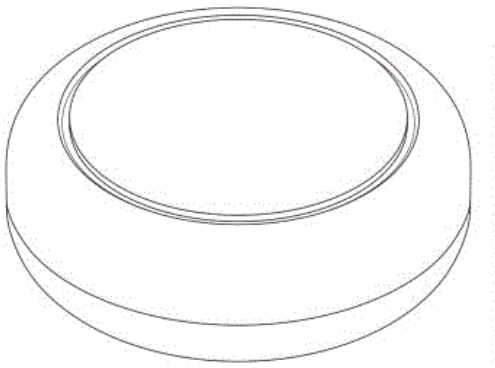

PERSPECTIVE VIEW

21: A2022/01685 22: 2022-12-22 23:
43: 2023-08-14
52: Class 27 24: Part A
71: PHILIP MORRIS PRODUCTS S.A.
33: EU 31: 009071939-0004 32: 2022-06-27
54: SNUS CAN
57: The design is to be applied to a snus can. The features for which protection is claimed are those of shape and/or configuration, substantially as shown in the representations.

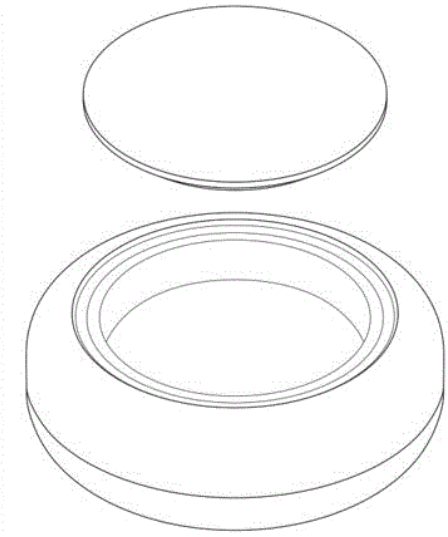

PERSPECTIVE VIEW
OF ARTICLE IN AN OPEN STATE

21: A2022/01686 22: 2022-12-22 23:
43: 2023-08-14
52: Class 27 24: Part A
71: PHILIP MORRIS PRODUCTS S.A.
33: EU 31: 009071939-0007 32: 2022-06-27
54: SNUS CAN
57: The design is to be applied to a snus can. The features for which protection is claimed are those of shape and/or configuration, substantially as shown in the representations.

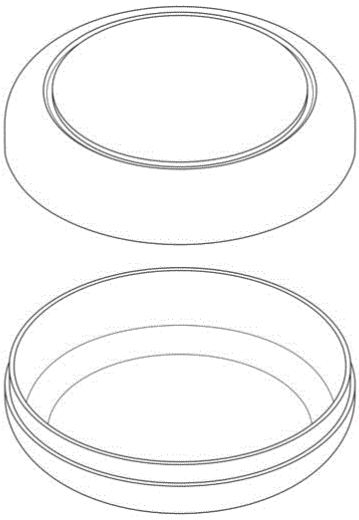

21: A2022/01687 22: 2022-12-22 23:
43: 2023-08-14
52: Class 27 24: Part A
71: PHILIP MORRIS PRODUCTS S.A.
33: EU 31: 009071939-0010 32: 2022-06-27
54: SNUS CAN
57: The design is to be applied to a snus can. The features for which protection is claimed are those of shape and/or configuration, substantially as shown in the representations.

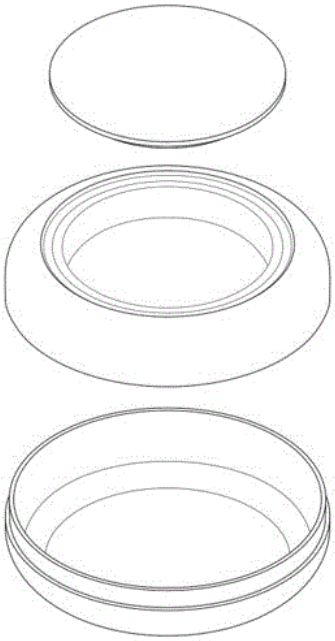

PERSPECTIVE VIEW

21: A2022/01688 22: 2022-12-22 23:
43: 2023-08-14
52: Class 27 24: Part A
71: PHILIP MORRIS PRODUCTS S.A.
33: EU 31: 009071939-0013 32: 2022-06-27
54: SNUS CAN
57: The design is to be applied to a snus can. The features for which protection is claimed are those of shape and/or configuration, substantially as shown in the representations.

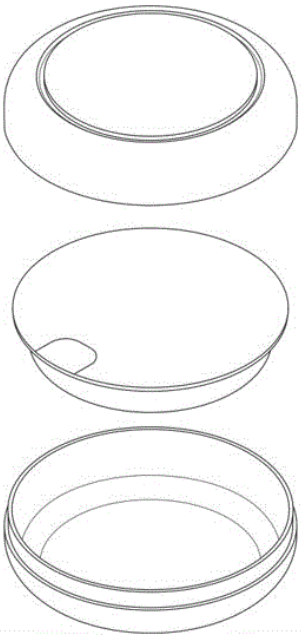

21: A2022/01690 22: 2022-12-22 23:
43: 2023-08-14
52: Class 27 24: Part A
71: PHILIP MORRIS PRODUCTS S.A.
33: EU 31: 009071939-0022 32: 2022-06-27
54: SNUS CAN
57: The design is to be applied to a snus can. The features for which protection is claimed are those of shape and/or configuration, substantially as shown in the representations.

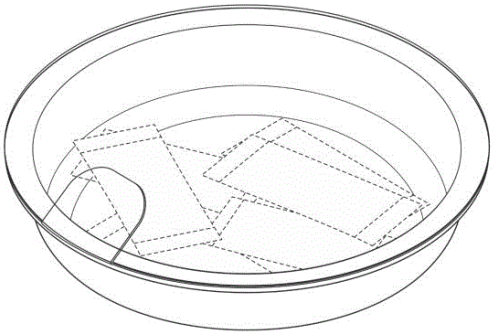

PERSPECTIVE VIEW

21: A2022/01691 22: 2022-12-22 23:
43: 2023-08-14
52: Class 27 24: Part A
71: PHILIP MORRIS PRODUCTS S.A.
33: EU 31: 009071939-0019 32: 2022-06-27
54: SNUS CAN
57: The design is to be applied to a snus can. The features for which protection is claimed are those of

shape and/or configuration, substantially as shown in the representations.

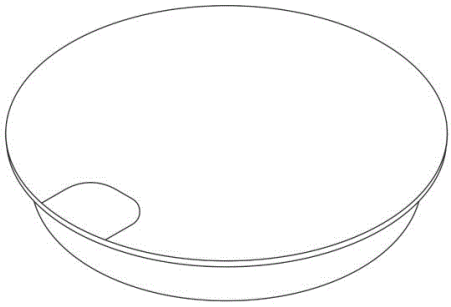

PERSPECTIVE VIEW

21: A2022/01692 22: 2022-12-22 23:
43: 2023-09-12
52: Class 24 24: Part A
71: ILLUMINA, INC., ILLUMINA SINGAPORE PTE. LTD.
33: US 31: 29/865,268 32: 2022-07-15
54: SEQUENCING INSTRUMENT
57: The design is applied to a sequencing instrument. The features of the design for which protection is claimed are those of the shape and/or configuration and/or pattern and/or ornamentation of the sequencing instrument, substantially as illustrated in the accompanying representation. The broken lines shown in the drawing illustrate portions of the sequencing instrument that form no part of the design and are disclaimed. Solid lines with a comparatively lighter line weight are used to indicate the surface contour of the claimed design and provide better understanding as to the contours of the claimed design. Such lighter-weight solid lines are not actual features of the design, but are merely provided as a visual aid to allow better understanding of the contours in the design.

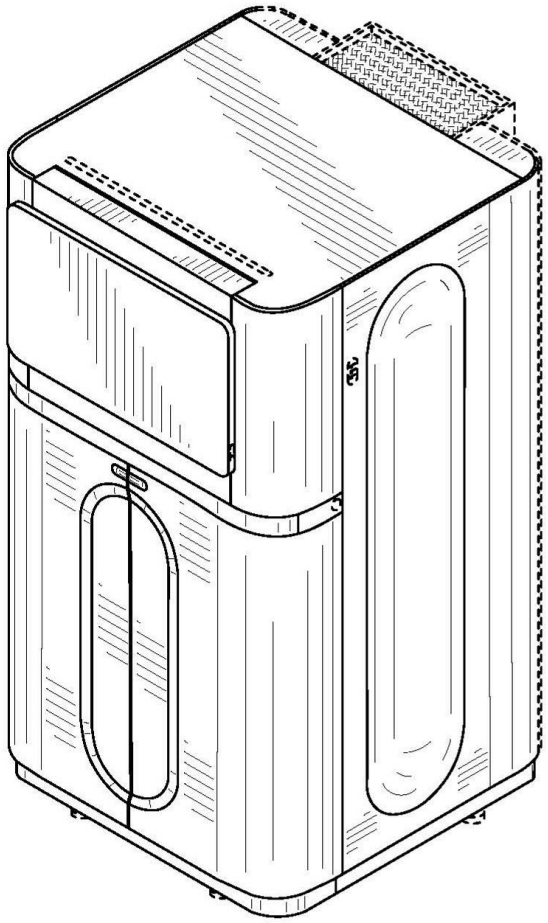

21: A2022/01693 22: 2022-12-22 23:
43: 2023-09-12
52: Class 24 24: Part A
71: ILLUMINA, INC., ILLUMINA SINGAPORE PTE. LTD.
33: US 31: 29/865,269 32: 2022-07-15
54: REAGENT CARTRIDGE
57: The design is applied to a reagent cartridge. The features of the design for which protection is claimed are those of the shape and/or configuration and/or pattern and/or ornamentation of a reagent cartridge, substantially as illustrated in the accompanying representation. The broken lines shown in the drawing illustrate portions of the reagent cartridge that form no part of the design and are disclaimed. Solid lines with a comparatively lighter line weight are used to indicate the surface contour of the claimed design and provide better understanding as to the contours of the claimed design. Such lighter-weight solid lines are not actual features of the design, but are merely provided as a visual aid to allow better understanding of the contours in the design.

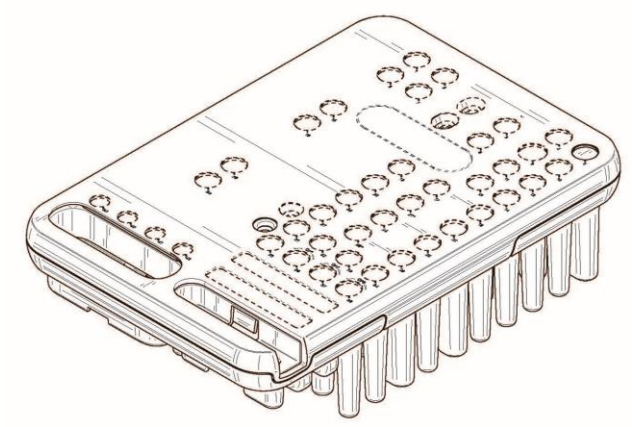

21: A2022/01694 22: 2022-12-22 23:
43: 2023-09-12
52: Class 24 24: Part A
71: ILLUMINA, INC.
33: US 31: 29/865,274 32: 2022-07-15
54: FLOW CELL CARTRIDGE
57: The design is applied to a flow cell cartridge. The features of the design for which protection is claimed are those of the shape and/or configuration and/or pattern and/or ornamentation of a flow cell cartridge, substantially as illustrated in the accompanying representation. The broken lines shown in the drawing illustrate portions of the flow cell cartridge that form no part of the claimed design and are disclaimed. Solid lines with a comparatively lighter line weight are used to indicate the surface contour of the claimed design and provide better understanding as to the contours of the claimed design. Such lighter-weight solid lines are not actual features of the design, but are merely provided as a visual aid to allow better understanding of the contours in the design.

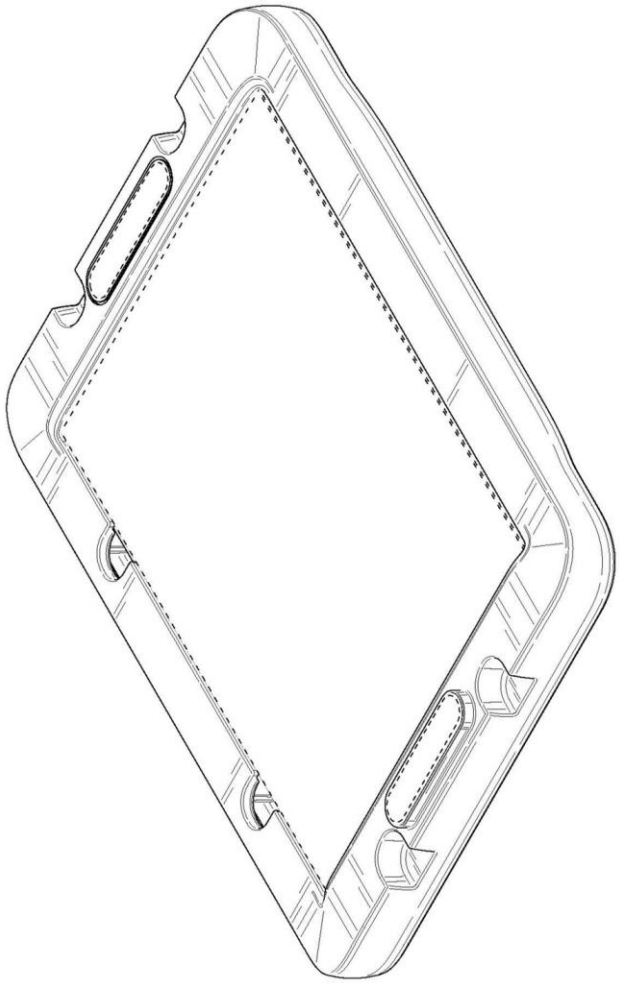

21: A2022/01695 22: 2022-12-22 23:
43: 2023-09-12
52: Class 24 24: Part A
71: ILLUMINA, INC., ILLUMINA SINGAPORE PTE. LTD.
33: US 31: 29/865,272 32: 2022-07-15
54: REAGENT CARTRIDGE
57: The design is applied to a reagent cartridge. The features of the design for which protection is claimed are those of the shape and/or configuration and/or pattern and/or ornamentation of a reagent cartridge, substantially as illustrated in the accompanying representation. The broken lines shown in the drawing illustrate portions of the reagent cartridge that form no part of the design and are disclaimed. Solid lines with a comparatively lighter line weight are used to indicate the surface contour of the claimed design and provide better understanding as to the contours of the claimed design. Such lighter-weight solid lines are not actual features of the design, but are merely provided as a visual aid to

allow better understanding of the contours in the design.

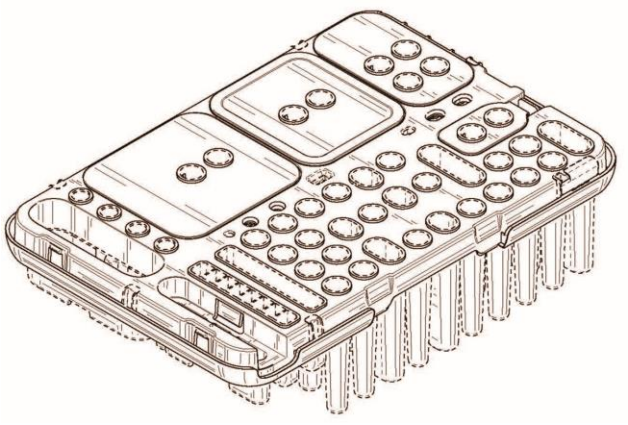

21: A2023/00012 22: 2023-01-03 23:
43: 2023-08-07
52: Class 12. 24: Part A
71: TRELLEBORG WHEEL SYSTEMS ITALIA S.P.A.
33: EM 31: 009078637 32: 2022-07-04
54: Tyre Tread
57: The design relates to a tyre tread. The features of the design are those of shape and/or configuration and/or pattern and/or ornamentation.



PERSPECTIVE VIEW

21: A2023/00018 22: 2023-01-05 23:
43: 2022-07-06
52: Class 12 24: Part A
71: Chery Automobile Co., Ltd.
33: CN 31: 202230424473.X 32: 2022-07-06
54: CARS
57: The design is for a car comprising an engine compartment, a passenger compartment, and a luggage compartment. A front face of the car, devoid of a radiator grille, defines horisontally spaced recessed formations, reminiscent of rounded ends of a rectangle, that house vertically elongated headlight clusters that taper downwardly. A cluster of diamond-shaped lights is located on the inside of each headlight cluster and a strip of decorative lights are provided on a front bumper. A horizontal light bar extends across an upper portion of the front face. From a side, the car has a flexible waistline and a sharp side skirt line. Door handles are flush with the doors and front and rear door handles are arranged in a contiguous relationship. The rear has an integrated spoiler and a through-type taillight group. A rear bumper and side skirts are accentuated.

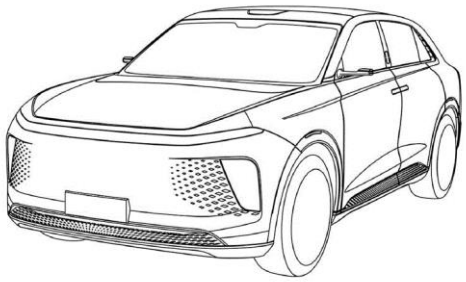

Figure 1

Three-dimensional view

21: A2023/00027 22: 2023-01-06 23:
43: 2022-07-08
52: Class 15 24: Part A
71: Caterpillar Inc.
33: US 31: 29/865,110 32: 2022-07-08
54: RETENTION COMPONENTS
57: The features of the design are illustrated in the overall appearance of the design. It is this overall appearance that is particular to the claimed design. This design relates to a retention component, which may be used with machine parts such as tips and adapters.

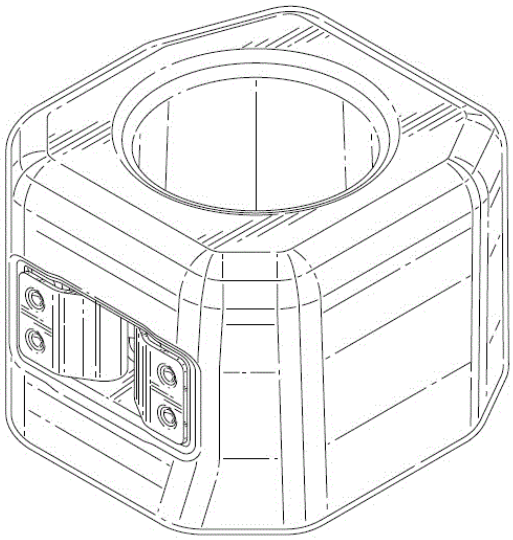

Figure 1

Three-dimensional view

21: A2023/00028 22: 2023-01-06 23:
43: 2022-07-08
52: Class 15 24: Part A
71: Caterpillar Inc.
33: US 31: 29/865,110 32: 2022-07-08
54: RETENTION COMPONENTS
57: The features of the design are illustrated in the overall appearance of the design. It is this overall appearance that is particular to the claimed design. This design relates to a retention component, which may be used with machine parts such as tips and adapters.

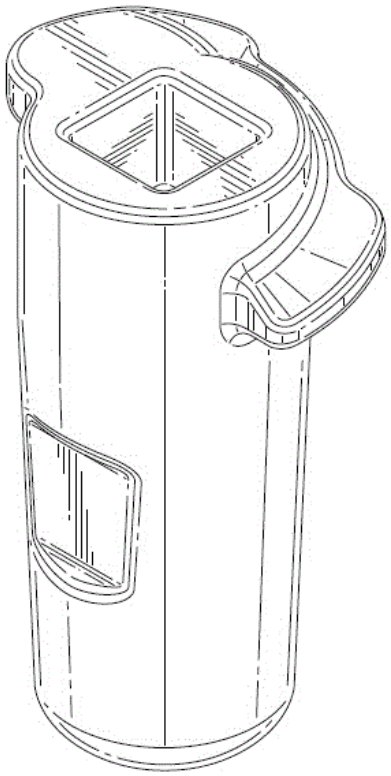

Figure 1

Three-dimensional view

21: A2023/00029 22: 2023-01-06 23:
43: 2022-07-08
52: Class 15 24: Part A
71: Caterpillar Inc.
33: US 31: 29/865,110 32: 2022-07-08
54: RETENTION COMPONENTS
57: The features of the design are illustrated in the overall appearance of the design. It is this overall appearance that is particular to the claimed design. This design relates to a retention component, which may be used with machine parts such as tips and adapters.

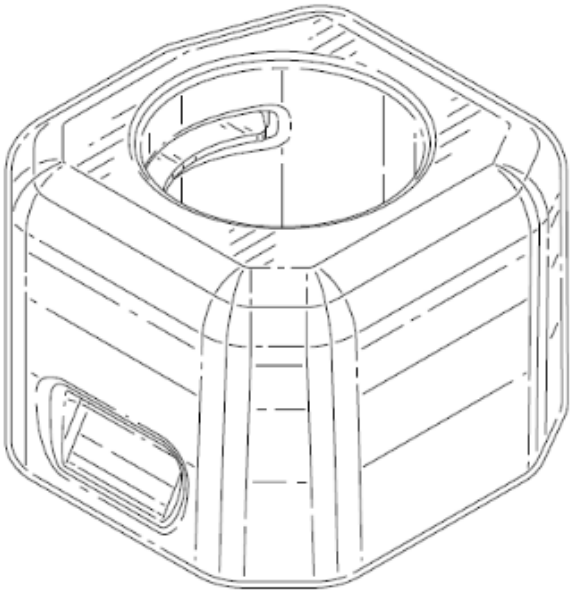

Figure 1

Three-dimensional view

21: A2023/00030 22: 2023-01-06 23:
43: 2022-07-08
52: Class 15 24: Part A
71: Caterpillar Inc.
33: US 31: 29/865,110 32: 2022-07-08
54: RETENTION COMPONENTS
57: The features of the design are illustrated in the overall appearance of the design. It is this overall appearance that is particular to the claimed design. This design relates to a retention component, which may be used with machine parts such as tips and adapters.

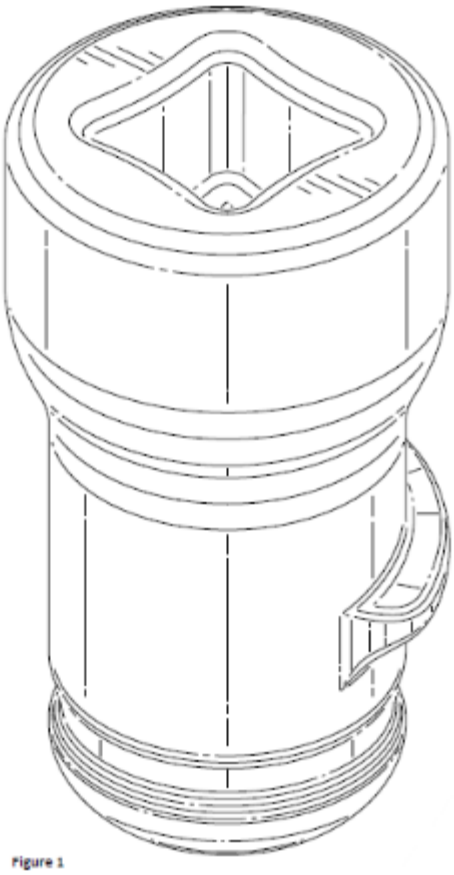

Figure 1

Three-dimensional view

21: A2023/00031 22: 2023-01-06 23:
43: 2022-07-08
52: Class 15 24: Part A
71: Caterpillar Inc.
33: US 31: 29/865,110 32: 2022-07-08
54: RETENTION COMPONENTS
57: The features of the design are illustrated in the overall appearance of the design. It is this overall appearance that is particular to the claimed design. This design relates to a retention component, which may be used with machine parts such as tips and adapters.

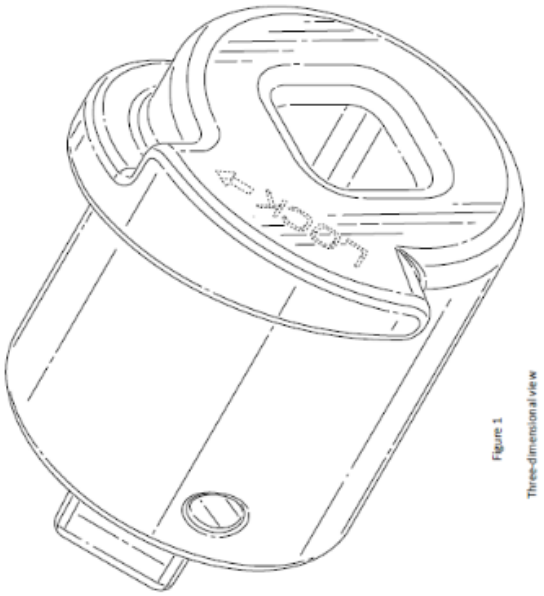

21: A2023/00032 22: 2023-01-06 23:
43: 2022-07-08
52: Class 15 24: Part A
71: Caterpillar Inc.
33: US 31: 29/865,110 32: 2022-07-08
54: RETENTION COMPONENTS
57: The features of the design are illustrated in the overall appearance of the design. It is this overall appearance that is particular to the claimed design. This design relates to a retention component, which may be used with machine parts such as tips and adapters.

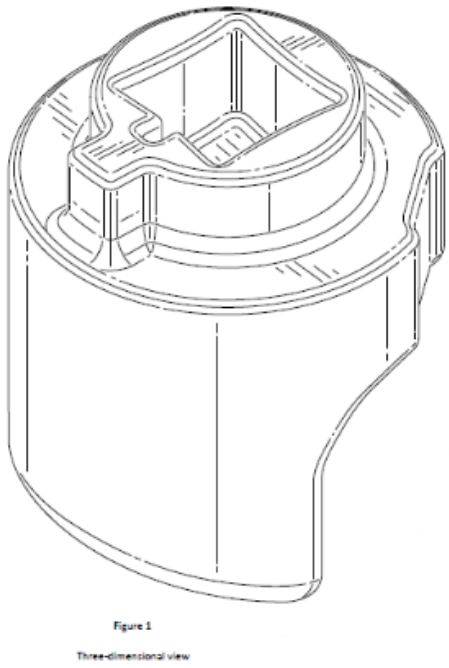

21: A2023/00033 22: 2023-01-06 23:
43: 2022-07-08
52: Class 15 24: Part A
71: Caterpillar Inc.
33: US 31: 29/865,110 32: 2022-07-08
54: RETENTION COMPONENTS
57: The features of the design are illustrated in the overall appearance of the design. It is this overall appearance that is particular to the claimed design. This design relates to a retention component, which may be used with machine parts such as tips and adapters.

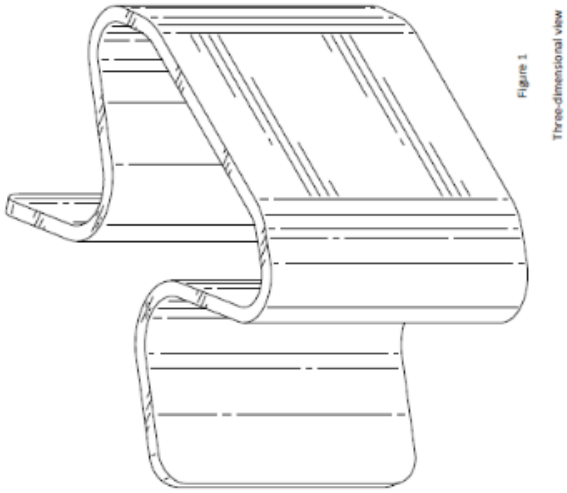

21: A2023/00034 22: 2023-01-09 23:
43: 2023-08-07
52: Class 21. 24: Part A
71: BALANCED BODY, INC.
33: US 31: 29/845,431 32: 2022-07-07
54: Pilates Chair Exercise Apparatus
57: The design relates to a pilates chair exercise apparatus. The features of the design are those of shape and/or configuration and/or pattern and/or ornamentation.



PERSPECTIVE VIEW

21: A2023/00035 22: 2023-01-09 23:
43: 2023-08-07
52: Class 21. 24: Part A
71: BALANCED BODY, INC.
33: US 31: 29/845,432 32: 2022-07-07
54: Pilates Chair Exercise Apparatus
57: The design relates to a pilates chair exercise apparatus. The features of the design are those of shape and/or configuration and/or pattern and/or ornamentation.

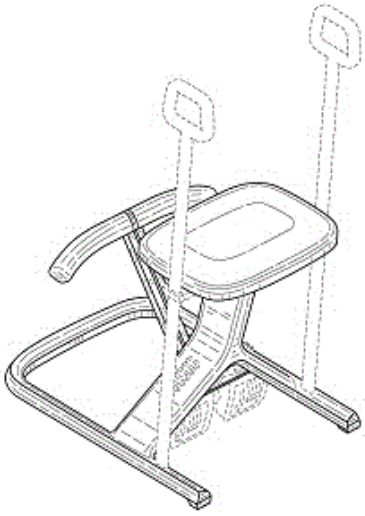

PERSPECTIVE VIEW

21: A2023/00036 22: 2023-01-09 23:
43: 2023-08-07
52: Class 21. 24: Part A
71: BALANCED BODY, INC.
33: US 31: 29/845,435 32: 2022-07-07
54: Pilates Chair Exercise Apparatus
57: The design relates to a pilates chair exercise apparatus. The features of the design are those of shape and/or configuration and/or pattern and/or ornamentation.

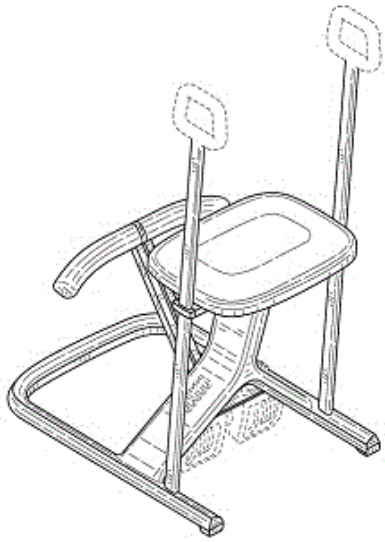

PERSPECTIVE VIEW

21: A2023/00037 22: 2023-01-09 23:
43: 2023-08-07
52: Class 21. 24: Part A
71: BALANCED BODY, INC.
33: US 31: 29/845,437 32: 2022-07-07
54: Pilates Chair Exercise Apparatus
57: The design relates to a pilates chair exercise apparatus. The features of the design are those of shape and/or configuration and/or pattern and/or ornamentation.

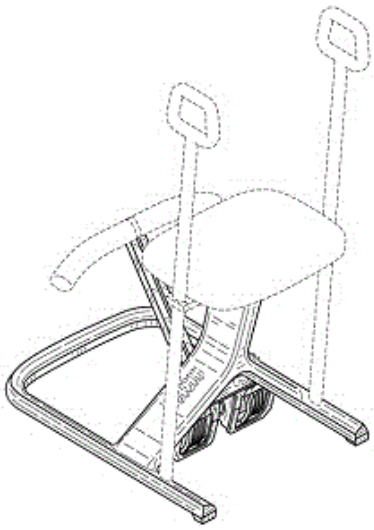

PERSPECTIVE VIEW

21: A2023/00040 22: 2023-01-09 23:
43: 2022-07-15
52: Class 14 24: Part A
71: HMD Global Oy
33: EM(FI) 31: 009088800-0001 32: 2022-07-15
54: MOBILE PHONES
57: The design is for a mobile phone having a slim rectangular housing including a convexly curved top wall, a convexly curved bottom wall and a pair of convexly curved sidewalls. A front face has a flat upper rectangular portion including an earpice, a display screen flanked by elongate rectangular operating buttons arranged in a vertical column along each sidewall. The front face includes a lower portion comprising a centrally positioned square operating button and a number of rectangular keys arranged in rows. A bottom row of keys is convexly curved at a lower side thereof. A rear face includes a square camera lens, a round flash, two parallel elongate rectangular loudspeakers and a top rectangular slidable cover for the earbuds, having curved sides that wrap around the sidewalls of the housing.

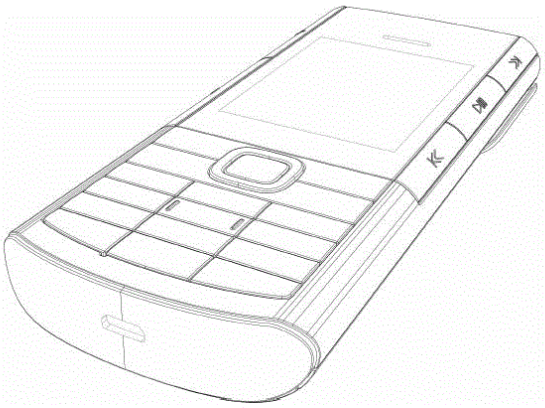

Figure 1

Three-dimensional view

21: A2023/00041 22: 2023-01-09 23:
43: 2022-07-15
52: Class 14 24: Part A
71: HMD Global Oy
33: EM(FI) 31: 009088800-0002 32: 2022-07-15
54: MOBILE PHONES
57: The design is for a mobile phone having a slim rectangular housing including a convexly curved top wall, a convexly curved bottom wall and a pair of convexly curved sidewalls. A front face has a flat upper rectangular portion including an earpice, a display screen and flanked by elongate rectangular operating buttons arranged in a vertical column along each sidewall. The front face includes a lower portion comprising a square operating button and a number of rectangular keys arranged in rows. A bottom row of the keys is convexly curved at a lower side thereof. A top portion of the rear face has a rectangular recess extending along a width of the rear face and a pair of L-shaped deeper recesses within the recess configured for housing a pair of earbuds. The rear face includes a rectangular slidable cover for the earbuds, having curved sides that wrap around the sidewalls.

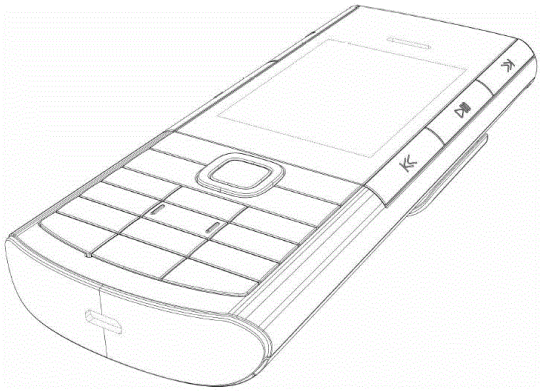

Figure 1

Three-dimensional view

21: A2023/00042 22: 2023-01-10 23:
43: 2022-07-11
52: Class 2 24: Part A
71: Essity Hygiene and Health Aktiebolag
33: EM(SE) 31: 009083272-0001 32: 2022-07-11
54: PANTS
57: The design is for pants, in particular napkin pants as shown in the representations. The napkin pants include a body defining an upper opening for accommodating a person's waist and a pair of opposed lower openings for accommodating a person's legs. The body has a front part and a rear part joined to the front part on the sides by a seam. The body further has a crotch part extending between the front and rear parts. The outer surface of the body is provided with a pattern of floral elements connected to one another by a network of connecting lines.



Figure 1

Three-dimensional view

21: A2023/00043 22: 2023-01-10 23:
43: 2022-07-11
52: Class 2 24: Part A
71: Essity Hygiene and Health Aktiebolag
33: EM(SE) 31: 009083272-0002 32: 2022-07-11
54: PANTS
57: The design is for pants, in particular napkin pants as shown in the representations. The napkin pants include a body having a front part and a rear part joined to the front part at the sides of the body. The outer surface of the body is provided with a pattern of floral elements connected to one another by a network of connecting lines.



Figure 1

Three-dimensional view

21: A2023/00044 22: 2023-01-10 23:
43: 2022-07-11
52: Class 2 24: Part A
71: Essity Hygiene and Health Aktiebolag
33: EM(SE) 31: 009083272-0003 32: 2022-07-11
54: PANTS
57: The design is for pants, in particular napkin pants as shown in the representations. The napkin pants include a body defining an upper opening for accommodating a person's waist and a pair of opposed lower openings for accommodating a person's legs. The body has a front part and a rear part joined to the front part at the sides of the body by a seam. The body further has a crotch part extending between the front and rear parts. The outer surface of the body is provided with a pattern of floral elements connected to one another by a network of connecting lines.

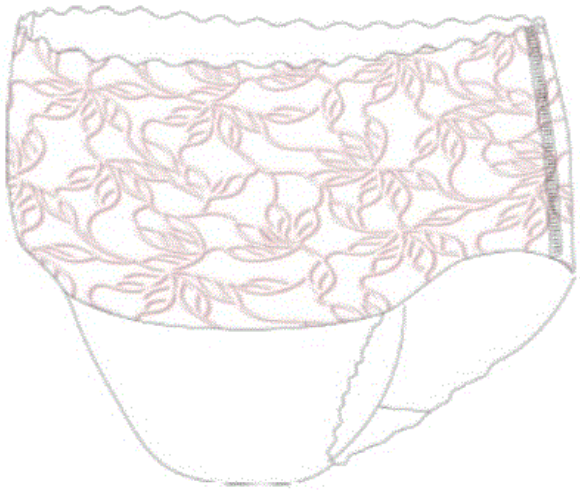

Figure 1

Three-dimensional view

21: A2023/00045 22: 2023-01-10 23:
43: 2022-07-11
52: Class 2 24: Part A
71: Essity Hygiene and Health Aktiebolag
33: EM(SE) 31: 009083272-0004 32: 2022-07-11
54: PANTS
57: The design is for pants, in particular napkin pants as shown in the representations. The napkin pants include a body having a front part and a rear part joined to the front part at the sides of the body. The outer surface of the body is provided with a pattern of floral elements connected to one another by a network of connecting lines.



Figure 1

Three-dimensional view

21: A2023/00046 22: 2023-01-10 23:
43: 2022-07-11
52: Class 2 24: Part A
71: Essity Hygiene and Health Aktiebolag
33: EM(SE) 31: 009083272-0014 32: 2022-07-11
54: PANTS
57: The design is for pants, in particular napkin pants as shown in the representations. The napkin pants include a body having a front part and a rear part joined to the front part at the sides of the body. An outer surface of each of the sides of the body is provided with a textured ripple pattern which undulates horizontally. The pattern extends partly onto the front and rear parts of the body and terminates, on both the front and rear parts, along a continuous wave-like undulating border that extends between upper and lower portions of the body.

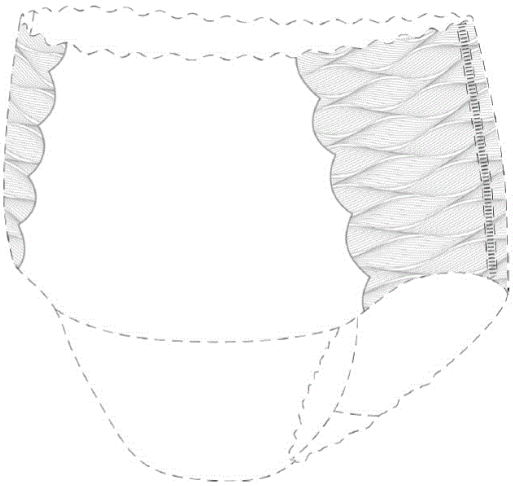

Figure 1

Three-dimensional view

21: A2023/00047 22: 2023-01-10 23:
43: 2022-07-11
52: Class 2 24: Part A
71: Essity Hygiene and Health Aktiebolag
33: EM(SE) 31: 009083272-0016 32: 2022-07-11
54: PANTS
57: The design is for pants, in particular napkin pants as shown in the representations. The napkin pants include a body having a front part and a rear part joined to the front part at the sides. An outer surface of each of the sides of the body is provided with a textured ripple pattern which undulates horizontally. The pattern extends partly onto the front and rear parts of the body and terminates, on both the front and rear parts, along a undulating wave-like border that extends between upper and lower portions of the body.

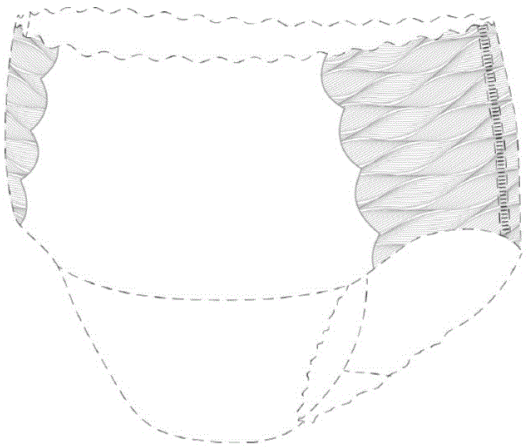

Figure 1

Three-dimensional view

21: A2023/00048 22: 2023-01-10 23:
43: 2022-07-11
52: Class 2 24: Part A
71: Essity Hygiene and Health Aktiebolag
33: EM(SE) 31: 009083272-0018 32: 2022-07-11
54: PANTS
57: The design is for pants, in particular napkin pants as shown in the representations. The napkin pants include a body having a front part and a rear part joined to the front part at the sides of the body. The outer surface of each of the sides of the body is provided with a textured ripple pattern which undulates horizontally. The pattern extends partly onto the front and rear parts of the body and widens towards the bottom, having a generally triangular profile on each side. The pattern has an undulating wave-like border.

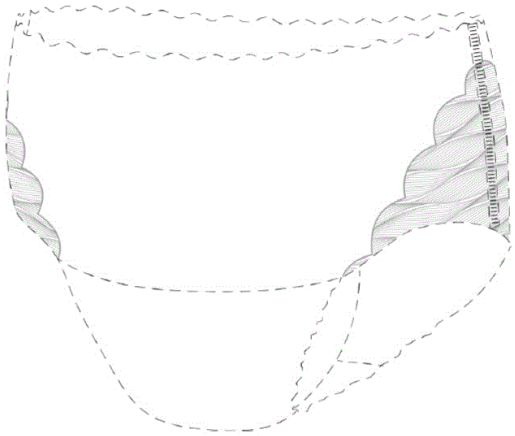

Figure 1

Three-dimensional view

21: A2023/00049 22: 2023-01-10 23:
43: 2022-07-11
52: Class 2 24: Part A
71: Essity Hygiene and Health Aktiebolag
33: EM(SE) 31: 009083272-0020 32: 2022-07-11
54: PANTS
57: The design is for pants, in particular napkin pants as shown in the representations. The napkin pants include a body having a front part and a rear part joined to the front part at the sides of the body. The outer surface of each of the sides of the body is provided with a textured ripple pattern which undulates horizontally. The pattern extends partly onto the front and rear parts of the body and widens towards the bottom, having a generally triangular profile on each side. The pattern has an undulating wave-like border.

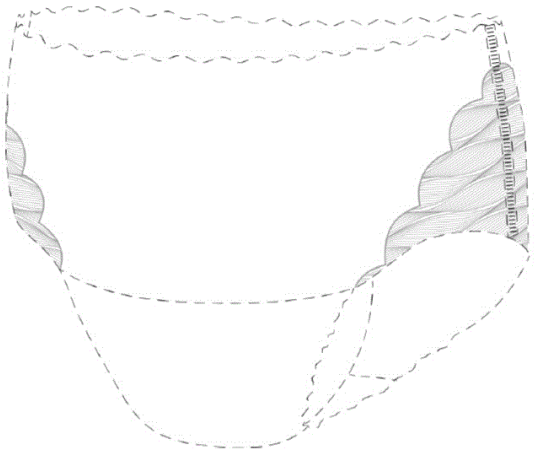

Figure 1

Three-dimensional view

21: A2023/00051 22: 2023-01-11 23:
43: 2022-07-12
52: Class 15 24: Part A
71: ESCO Group LLC
33: US 31: 29/846,009 32: 2022-07-12
54: WEAR MEMBERS
57: The design is for a wear member in the form of a bit portion of a tooth point for use in earth working operations such as for attachment to a digging edge of a bucket used in excavating operations. The bit portion includes a side recess that extends upwardly near a rear of the tooth point to create a unique appearance for the tooth point.

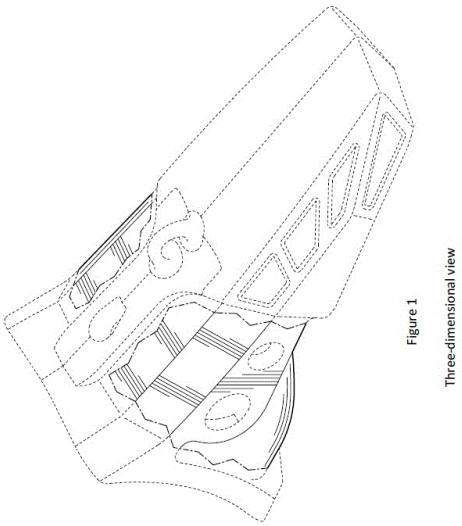

Figure 1

Three-dimensional view

21: A2023/00052 22: 2023-01-11 23:
43: 2022-07-12
52: Class 15 24: Part A
71: ESCO Group LLC
33: US 31: 29/846,010 32: 2022-07-12
54: WEAR MEMBERS
57: The design is for a wear member in the form of a bit portion of a tooth point for use in earth working operations such as for attachment to a digging edge of a bucket used in excavating operations. The bit portion includes various angled facets that create a unique appearance for tooth points.

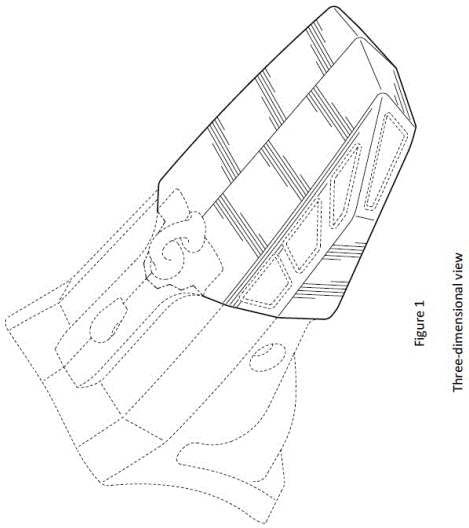

Figure 1

Three-dimensional view

21: A2023/00053 22: 2023-01-11 23:
43: 2022-07-12
52: Class 15 24: Part A
71: ESCO Group LLC
33: US 31: 29/846,012 32: 2022-07-12
54: WEAR MEMBERS
57: The design is for a wear member in the form of a bit portion of a tooth point for use in earth working operations such as for attachment to a digging edge of a bucket used in excavating operations. A surface of the bit portion includes various trapezoidal shapes arranged in an axial pattern on one of the angled facets of the bit portion that create a unique appearance for tooth points.

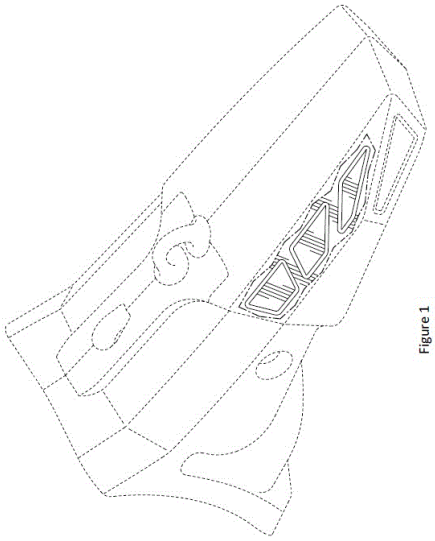

Figure 1
Three-dimensional view

21: A2023/00055 22: 2023-01-12 23:
43: 2023-08-14
52: Class 12. 24: Part A
71: GREAT WALL MOTOR COMPANY LIMITED
33: CN 31: CN202230473534.1 32: 2022-07-23
54: Automobile
57: The design relates to an automobile. The features of the design are those of shape and/or configuration and/or pattern and/or ornamentation.



FRONT PERSPECTIVE VIEW

21: A2023/00062 22: 2023-01-13 23:
43: 2023-08-07
52: Class 13. 24: Part A
71: LEGRAND FRANCE, LEGRAND SNC
33: EM 31: 009096902-0001 32: 2022-07-26
54: Electrical Switch
57: The design relates to an electrical switch. The features of the design are those of shape and/or configuration and/or ornamentation.

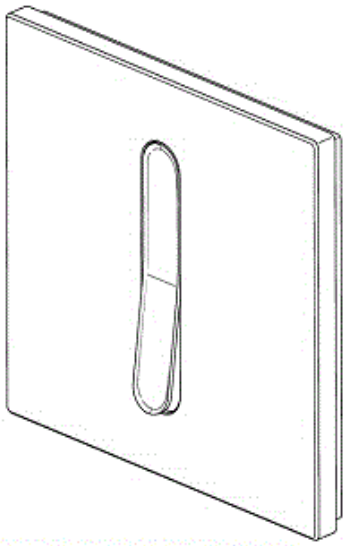

PERSPECTIVE VIEW

21: A2023/00064 22: 2023-01-13 23:
43: 2023-08-07
52: Class 13. 24: Part A
71: LEGRAND FRANCE, LEGRAND SNC
33: EM 31: 009096902-0003 32: 2022-07-26
54: Electrical Switch
57: The design relates to an electrical switch. The features of the design are those of shape and/or configuration and/or ornamentation.

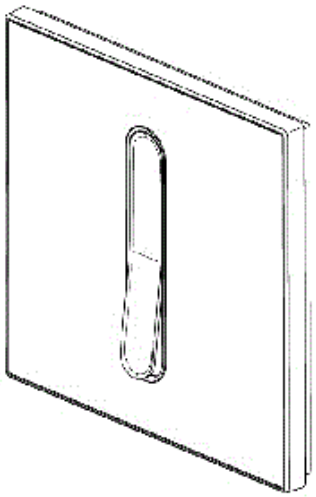

PERSPECTIVE VIEW

21: A2023/00065 22: 2023-01-13 23:
43: 2023-08-07
52: Class 13. 24: Part A
71: LEGRAND FRANCE, LEGRAND SNC
33: EM 31: 009096902-0004 32: 2022-07-26
54: Electrical Switch

57: The design relates to an electrical switch. The features of the design are those of shape and/or configuration and/or ornamentation.

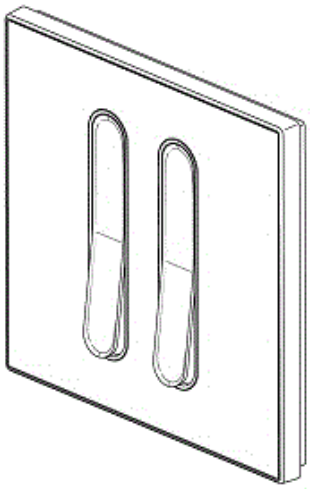

PERSPECTIVE VIEW

21: A2023/00066 22: 2023-01-13 23:
43: 2023-08-07
52: Class 13. 24: Part A
71: LEGRAND FRANCE, LEGRAND SNC
33: EM 31: 009096902-0005 32: 2022-07-26
54: Electrical Switch
57: The design relates to an electrical switch. The features of the design are those of shape and/or configuration and/or ornamentation.

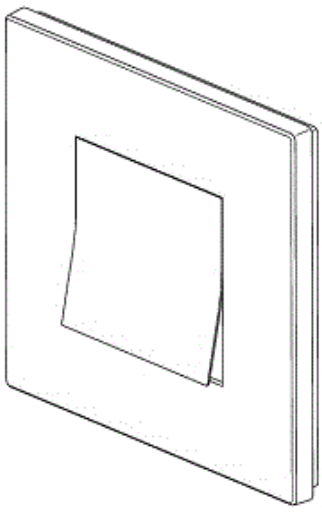

PERSPECTIVE VIEW

21: A2023/00067 22: 2023-01-13 23:
43: 2023-08-07
52: Class 13. 24: Part A
71: LEGRAND FRANCE, LEGRAND SNC
33: EM 31: 009096902-0006 32: 2022-07-26
54: Electrical Switch
57: The design relates to an electrical switch. The features of the design are those of shape and/or configuration and/or ornamentation.

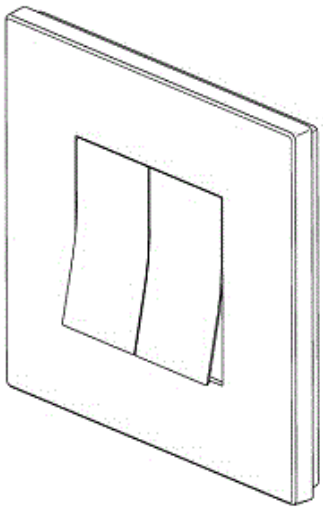

PERSPECTIVE VIEW

21: A2023/00077 22: 2023-01-17 23:
43: 2023-08-23
52: Class 9. 24: Part A
71: B. BRAUN AVITUM AG
33: EM 31: 009092182-0012 32: 2022-07-19
54: Container
57: The design relates to a container. The features of the design are those of shape and/or configuration and/or pattern and/or ornamentation.

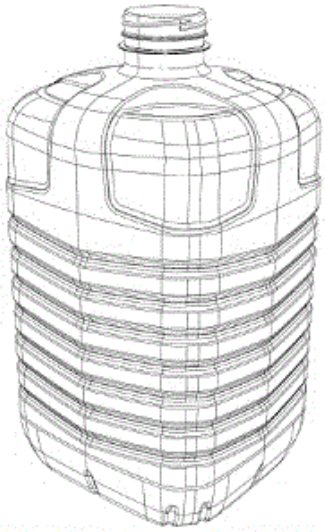

PERSPECTIVE VIEW

21: A2023/00079 22: 2023-01-17 23:
43: 2023-08-14
52: Class 13 24: Part A
71: Hubble Lithium (Pty) Ltd
54: BATTERY ENCLOSURE
57: The design is applied to a battery enclosure. The features of the design for which protection is claimed are those of the shape and/or configuration and/or pattern and/or ornamentation of the battery enclosure, substantially as illustrated in the accompanying representation.

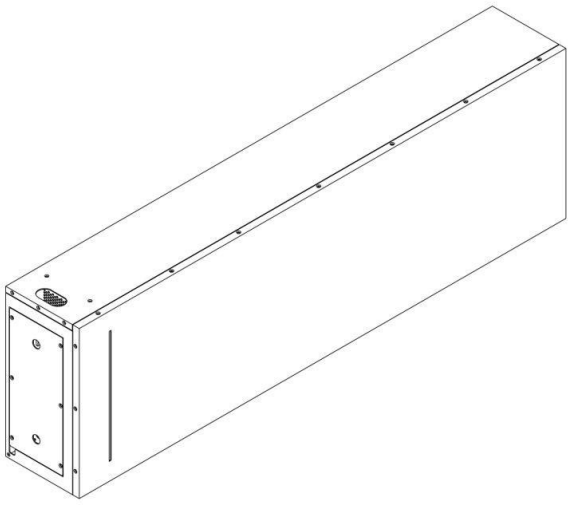

21: A2023/00083 22: 2023-01-19 23:
43: 2023-01-19
52: Class 12 24: Part A
71: Omni United (S) PTE Ltd.

54: TYRES AND TYRE TREADS
57: The features of the tire tread design include a void-to-lug ratio suitable for all-terrain use. Serrations and raised triangular stone ejectors in the tread grooves reduce lodging of stones. The interlocking tread block design ensures the pattern works with the terrain while lateral grooves and angled sipes ensure traction on all surfaces. A wide center block design ensures no pattern movement on-road and a quiet ride.



Figure 1
Three-dimensional view

21: A2023/00084 22: 2023-01-20 23:
43: 2023-01-20
52: Class 12 24: Part A
71: SUPERCART SOUTH AFRICA (PTY) LTD
54: TROLLEY
57: The design is applied to a trolley, and in particular to an all plastic shopping trolley that is sized for use by children. The features of the design for which protection is claimed include the shape and/or configuration of a trolley, substantially as illustrated in the accompanying representations

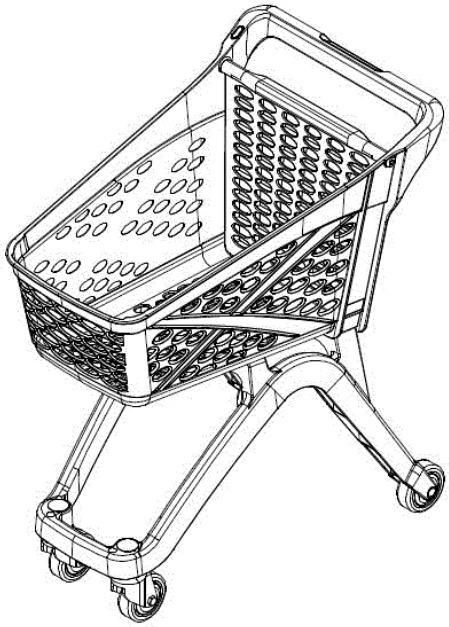

Three-dimensional view from front

21: A2023/00086 22: 2023-01-20 23:
43: 2023-01-20
52: Class 12 24: Part A
71: SUPERCART SOUTH AFRICA (PTY) LTD
54: TROLLEY
57: The design is applied to a trolley, and in particular to an all plastic shopping trolley that is sized for use by children. The features of the design for which protection is claimed include the shape and/or configuration of a trolley, substantially as illustrated in the accompanying representations.



Three-dimensional view from front

21: A2023/00087 22: 2023-01-23 23:
43: 2023-08-14
52: Class 09 24: Part A
71: Polyoak Packaging (Pty) Ltd
54: CAP
57: The features of the design for which protection is claimed include the shape and/or configuration and/or pattern of an article substantially as shown in the accompanying representation(s).



21: A2023/00089 22: 2023-01-23 23:
43: 2022-07-22
52: Class 9 24: Part A
71: S.I.P.A. Societa' Industrializzazione Progettazione e Automazione S.p.A.

33: EM(IT) 31: 009095938-0001 32: 2022-07-22
54: BOTTLES
57: The claimed designs are for a sparkling wine or prosecco bottle made of plastic material, preferably PET.

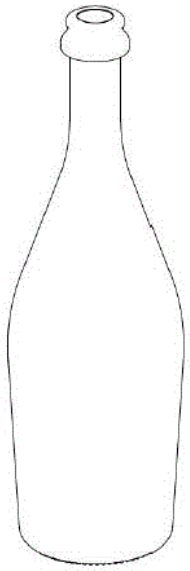

Figure 1

Three-dimensional view



Figure 1

Side view

21: A2023/00090 22: 2023-01-23 23:
43: 2022-07-22
52: Class 9 24: Part A
71: S.I.P.A. Societa' Industrializzazione Progettazione e Automazione S.p.A.
33: EM(IT) 31: 009095938-0002 32: 2022-07-22
54: BOTTLES
57: The claimed designs are for a sparkling wine or prosecco bottle made of plastic material, preferably PET. The light reflection on the surface of the bottle in the pictures is for illustrative purposes only and forms no part of the claimed designs.

21: A2023/00091 22: 2023-01-23 23:
43: 2022-07-22
52: Class 9 24: Part A
71: S.I.P.A. Societa' Industrializzazione Progettazione e Automazione S.p.A.
33: EM(IT) 31: 009095938-0003 32: 2022-07-22
54: BOTTLES
57: The claimed designs are for a sparkling wine or prosecco bottle made of plastic material, preferably PET. The light reflection on the surface of the bottle in the pictures is for illustrative purposes only and forms no part of the claimed designs.



Figure 1

Side view

21: A2023/00095 22: 2023-01-24 23:
43: 2023-08-07
52: Class 10. 24: Part A
71: AGI SURETRACK LLC
33: US 31: 29/847,600 32: 2022-07-26
54: Sensor
57: The design relates to a sensor. The features of the design are those of shape and/or configuration and/or pattern and/or ornamentation.

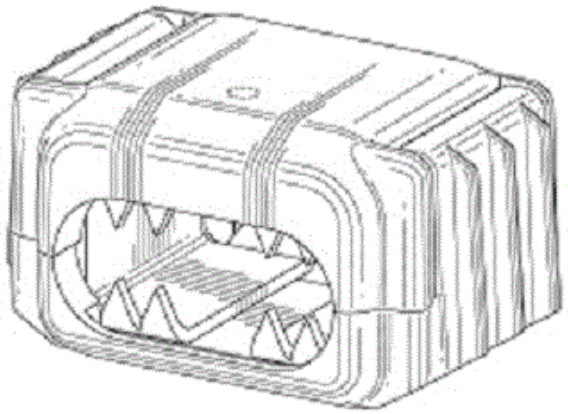

FRONT, RIGHT, UPPER PERSPECTIVE VIEW

21: A2023/00096 22: 2023-01-24 23:
43: 2023-08-07
52: Class 10. 24: Part A
71: AGI SURETRACK LLC
33: US 31: 29/847,600 32: 2022-07-26
54: Sensor
57: The design relates to a sensor. The features of the design are those of shape and/or configuration and/or pattern and/or ornamentation.

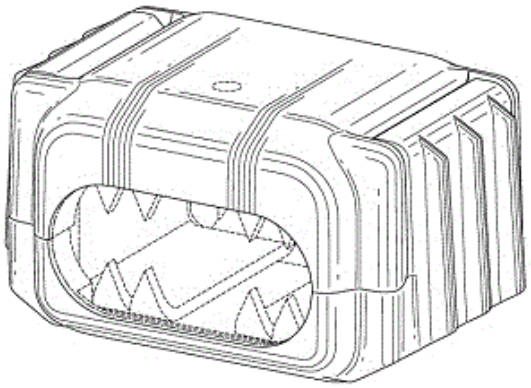

FRONT, RIGHT, UPPER PERSPECTIVE VIEW

21: A2023/00097 22: 2023-01-24 23:
43: 2023-08-07
52: Class 10. 24: Part A
71: AGI SURETRACK LLC
33: US 31: 29/847,600 32: 2022-07-26
54: Sensor
57: The design relates to a sensor. The features of the design are those of shape and/or configuration and/or pattern and/or ornamentation.

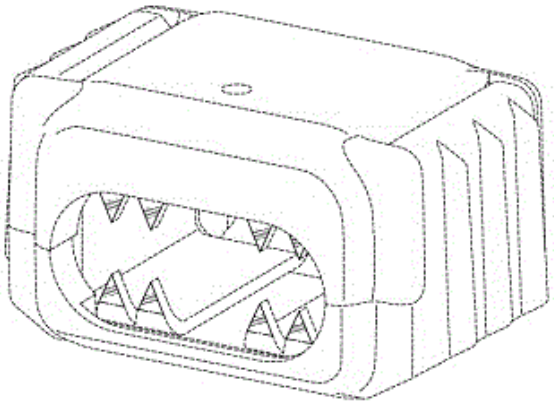

FRONT, RIGHT, UPPER PERSPECTIVE VIEW

21: A2023/00101 22: 2023-01-25 23:
43: 2023-08-07
52: Class 13 24: Part A
71: SONY INTERACTIVE ENTERTAINMENT INC.
33: JP 31: 2022-017161 32: 2022-08-10
54: CONNECTOR
57: The design is applied to a connector and is shown in perspective front, top, and left side view in the drawing showing the overall appearance thereof.

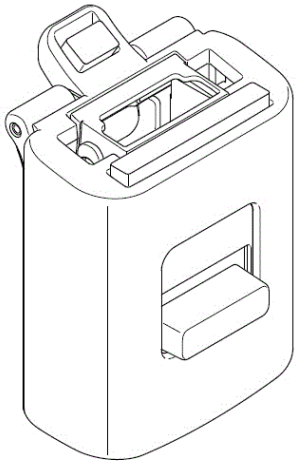

21: A2023/00102 22: 2023-01-25 23:
43: 2023-08-07
52: Class 14 24: Part A
71: SONY INTERACTIVE ENTERTAINMENT INC.
33: JP 31: 2022-016800 32: 2022-08-05
54: UNIT FOR THUMBSTICK OF CONTROLLER FOR ELECTRONIC DEVICE
57: The design is applied to a unit for a thumbstick of a controller for an electronic device and is shown in perspective front, top, and right side view in the drawing showing the overall appearance thereof.

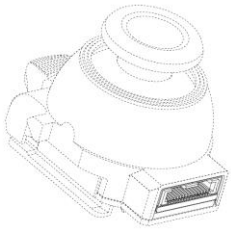

21: A2023/00103 22: 2023-01-25 23:
43: 2023-08-07
52: Class 14 24: Part A
71: SONY INTERACTIVE ENTERTAINMENT INC.
33: JP 31: 2022-016805 32: 2022-08-05
54: HOUSING OF CONTROLLER FOR ELECTRONIC DEVICE
57: The design is applied to a housing of a controller for an electronic device and is shown in perspective front, top, and right side view in the drawing showing the overall appearance thereof.

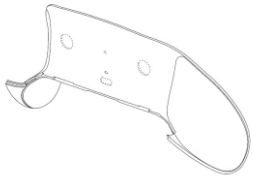

21: A2023/00104 22: 2023-01-25 23:
43: 2023-08-07
52: Class 14 24: Part A
71: SONY INTERACTIVE ENTERTAINMENT INC.
33: JP 31: 2022-016804 32: 2022-08-05
54: HOUSING OF CONTROLLER FOR ELECTRONIC DEVICE
57: The design is applied to a housing of a controller for an electronic device and is shown in perspective rear, bottom, and right side view in the drawing showing the overall appearance thereof.

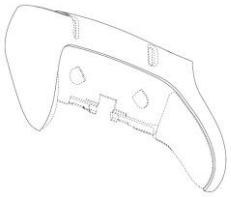

21: A2023/00105 22: 2023-01-25 23:
43: 2023-08-07
52: Class 14 24: Part A
71: SONY INTERACTIVE ENTERTAINMENT INC.
33: JP 31: 2022-016807 32: 2022-08-05
54: THUMBSTICK OF CONTROLLER FOR ELECTRONIC DEVICE

57: The design is applied to a thumbstick of a controller for an electronic device and is shown in a perspective rear, bottom, and left side view in the drawing showing the overall appearance thereof.

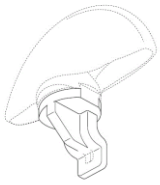

21: A2023/00106 22: 2023-01-25 23:
43: 2023-08-07
52: Class 14 24: Part A
71: SONY INTERACTIVE ENTERTAINMENT INC.
33: CN 31: 202230508377.3 32: 2022-08-05
54: HOUSING OF CONTROLLER
57: The design is applied to a housing of a controller and is shown in front perspective view in the drawing showing the overall appearance thereof.



21: A2023/00107 22: 2023-01-25 23:
43: 2023-08-07
52: Class 14 24: Part A
71: SONY INTERACTIVE ENTERTAINMENT INC.
33: JP 31: 2022-016803 32: 2022-08-05
54: HOUSING OF CONTROLLER FOR ELECTRONIC DEVICE
57: The design is applied to a housing of a controller for an electronic device and is shown in perspective front, bottom, and right side view in the drawing showing the overall appearance thereof.



21: A2023/00108 22: 2023-01-25 23:
43: 2023-08-07
52: Class 14 24: Part A
71: SONY INTERACTIVE ENTERTAINMENT INC.
33: JP 31: 2022-016798 32: 2022-08-05
54: CONTROLLER FOR ELECTRONIC DEVICE

57: The design is applied to a controller for an electronic device and is shown in perspective rear, bottom, and left side view in the drawing showing the overall appearance thereof.

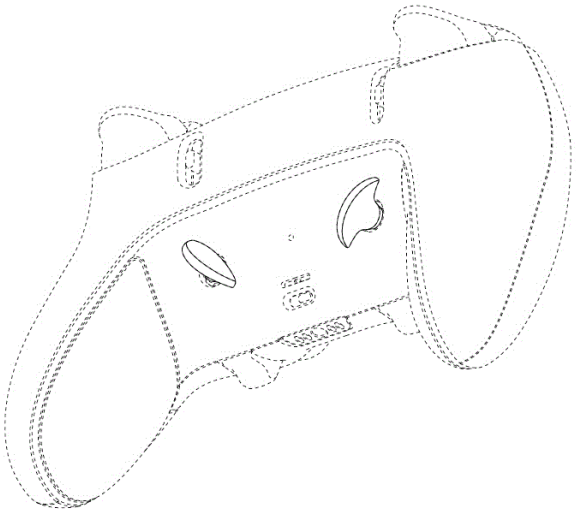

21: A2023/00110 22: 2023-01-25 23:
43: 2023-08-07
52: Class 14 24: Part A
71: SONY INTERACTIVE ENTERTAINMENT INC.
33: JP 31: 2022-016799 32: 2022-08-05
54: UNIT FOR THUMBSTICK OF CONTROLLER FOR ELECTRONIC DEVICE
57: The design is applied to a unit for a thumbstick of a controller for an electronic device and is shown in perspective front, bottom, and right side view in the drawing showing the overall appearance thereof.



21: A2023/00111 22: 2023-01-25 23:
43: 2023-08-07
52: Class 14 24: Part A
71: SONY INTERACTIVE ENTERTAINMENT INC.
33: JP 31: 2022-016797 32: 2022-08-05
54: CONTROLLER FOR ELECTRONIC DEVICE
57: The design is applied to a controller for an electronic device and is shown in perspective front, top, and right side view in the drawing showing the overall appearance thereof.

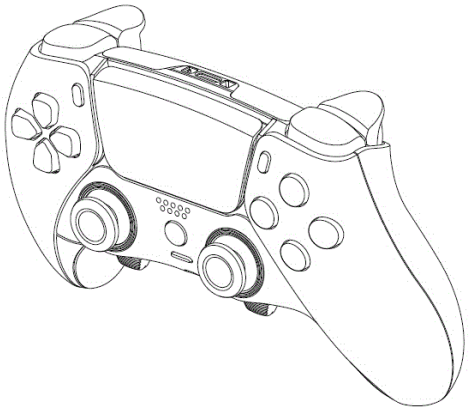

21: A2023/00113 22: 2023-01-25 23:
43: 2023-08-07
52: Class 14 24: Part A
71: SONY INTERACTIVE ENTERTAINMENT INC.
33: JP 31: 2022-016808 32: 2022-08-05
54: CONTROLLER FOR ELECTRONIC DEVICE
57: The design is applied to a controller for an electronic device and is shown top view in the drawing showing the overall appearance thereof.

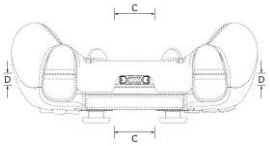

21: A2023/00114 22: 2023-01-25 23:
43: 2023-08-07
52: Class 14 24: Part A
71: SONY INTERACTIVE ENTERTAINMENT INC.
33: JP 31: 2022-016806 32: 2022-08-05
54: THUMBSTICK OF CONTROLLER FOR ELECTRONIC DEVICE
57: The design is applied to a thumbstick of a controller for an electronic device and is shown in perspective front, top, and left side view in the drawing showing the overall appearance thereof.



21: A2023/00115 22: 2023-01-26 23:
43: 2023-01-26
52: Class 13 24: Part A
71: WSR IP (PTY) LTD.
54: LOW VOLTAGE CONNECTOR PANELS
57: The design is for a low voltage connector panel, which is particularly suitable for installation in a vehicle with a 12 Volt electrical system. The panel includes a housing which is rectangular in outline in front view. The housing comprises side walls that are initially perpendicular to a planar rear panel of the housing, and which then slant inwardly towards a two-plane panel face which is bordered by a projecting lip along a top and sides of the panel face. End portions of the lip project downwardly and outwardly towards front bottom corners of the housing. A top plane of the panel face is parallel to the planar rear panel of the housing, whereas a bottom plane of the panel face slants rearwardly and downwardly away from the top plane. Various electrical sockets and connectors may be accessible through the panel face, which may also carry an on-off switch.

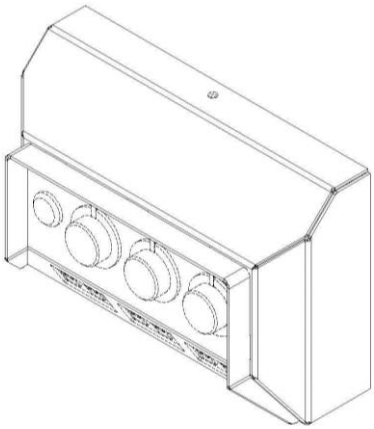

21: A2023/00117 22: 2023-01-26 23:
43: 2023-08-10
52: Class 2. 24: Part A
71: CROCS TRADING COMPANY PTE. LTD.
33: US 31: 29/865,447 32: 2022-07-26
33: US 31: 29/869,191 32: 2022-12-23
54: Outsole
57: The design relates to an outsole. The features of the design are those of shape and/or configuration and/or pattern and/or ornamentation.

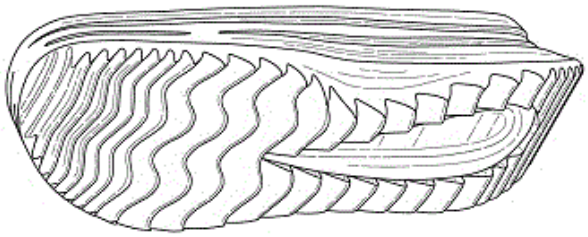

PERSPECTIVE VIEW

21: A2023/00123 22: 2023-01-27 23:
43: 2023-08-14
52: Class 09 24: Part A
71: Polyoak Packaging (Pty) Ltd
54: BOTTLE
57: The features of the design for which protection is claimed include the shape and/or configuration and/or pattern of an article substantially as shown in the accompanying representation(s).

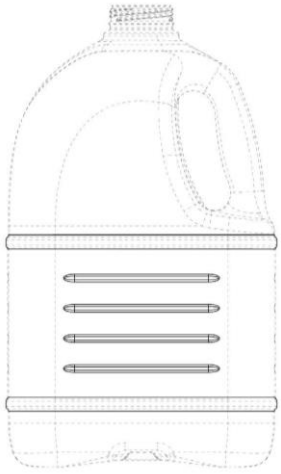

21: A2023/00125 22: 2023-01-27 23:
43: 2023-08-07
52: Class 09 24: Part A
71: Polyoak Packaging (Pty) Ltd
54: PULL TAB
57: The features of the design for which protection is claimed include the shape and/or configuration and/or pattern of an article substantially as shown in the accompanying representation(s).

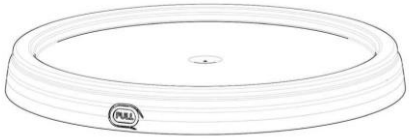

21: A2023/00172 22: 2023-02-09 23:
43: 2023-09-05
52: Class 2 24: Part A
71: DAIO PAPER CORPORATION
54: DISPOSABLE DIAPER
57: The design is to be applied to a disposable diaper. The features for which protection is claimed are those of shape and/or configuration and/or pattern, substantially as shown in the representations. The colour in gray scale are for illustrative purposes only and form no part of the claimed design.

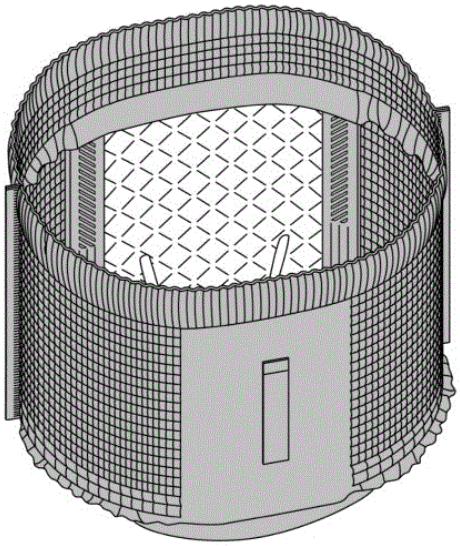

REAR PERSPECTIVE VIEW

21: A2023/00175 22: 2023-02-09 23:
43: 2023-09-05
52: Class 07 24: Part A
71: 18 TEN ACCESSORIES CC
54: A COOKING APPARATUS
57: The design is applied to a cooking apparatus. The features of the design for which protection is claimed are those of the shape and/or configuration and/or pattern of the cooking apparatus, substantially as illustrated in the accompanying representations. Features of the cooking apparatus shown in broken lines do not form part of the design and are disclaimed.

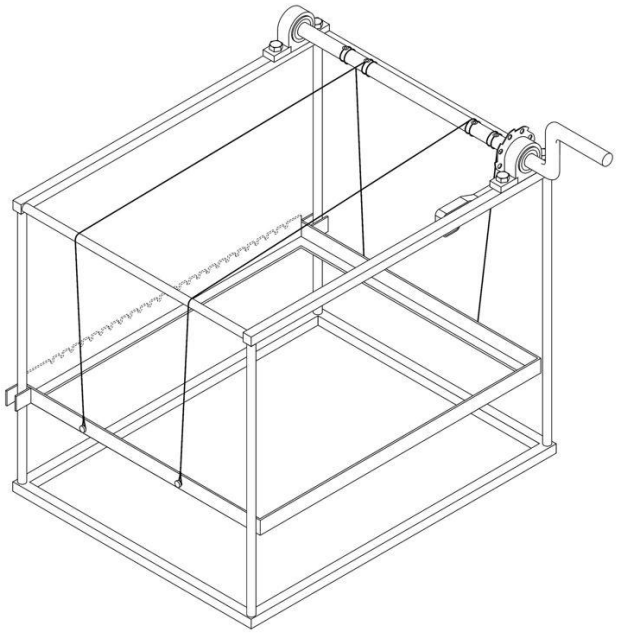

FIG. 1 THREE-DIMENSIONAL VIEW

21: A2023/00177 22: 2023-02-09 23:
43: 2023-09-05
52: Class 07 24: Part A
71: 18 TEN ACCESSORIES CC
54: A COOKING ACCESSORY
57: The design is applied to a cooking accessory. The features of the design for which protection is claimed are those of the shape and/or configuration and/or pattern of the cooking accessory, substantially as illustrated in the accompanying representation. Features of the cooking accessory shown in broken lines do not form part of the design and are disclaimed.

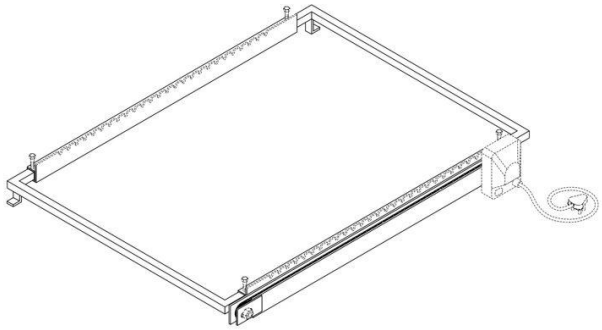

FIG. 1 THREE-DIMENSIONAL VIEW OF A COOKING ACCESSORY IN A COLLAPSED CONDITION

21: A2023/00199 22: 2023-02-15 23:
43: 2023-09-05
52: Class 09 24: Part A
71: FORTIS X (PTY) LTD
54: CONTAINER A
57: The features for which protection is claimed reside in the shape and/or configuration and/or ornamentation of a container, as shown in the accompanying drawings, irrespective of the features indicated in broken lines.

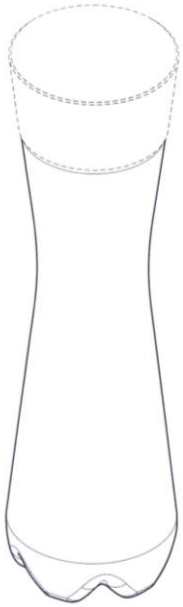

21: A2023/00276 22: 2023-02-27 23:
43: 2023-09-06
52: Class 32 24: Part A
71: PHILIP MORRIS PRODUCTS S.A.
33: EU 31: 009163181-0001 32: 2022-09-02
54: ORNAMENTATION FOR A PACKAGING BOX
57: The design is to be applied to an ornamentation for a packaging box. The features for which protection is claimed are those of shape and/or configuration and/or pattern and/or ornamentation, substantially as shown in the representations. The broken lines are for illustrative purposes only and form no part of the claimed design. The design is represented in greyscale that shows a certain contrast compared with brighter or darker adjacent areas, however, the design shall not be limited to the color grey, but in embodiments may encompass any color or combination of colors.



FRONT VIEW

21: A2023/00277 22: 2023-02-27 23:
43: 2023-09-06
52: Class 32 24: Part A
71: PHILIP MORRIS PRODUCTS S.A.
33: EU 31: 009163181-0005 32: 2022-09-02
54: PACKAGING, PACKAGING BOX (PART OF-) OR ORNAMENTATION FOR PACKAGING, IN PARTICULAR FOR HEATED TOBACCO CONSUMABLES PACKAGING
57: The design is to be applied to a packaging, packaging box (part of-) or ornamentation for packaging, in particular for heated tobacco consumables packaging. The features for which protection is claimed are those of shape and/or configuration and/or pattern and/or ornamentation, substantially as shown in the representations. The broken lines are for illustrative purposes only and form no part of the claimed design. The design is represented in greyscale that shows a certain contrast compared with brighter or darker adjacent areas, however, the design shall not be limited to the color grey, but in embodiments may encompass any color or combination of colors.

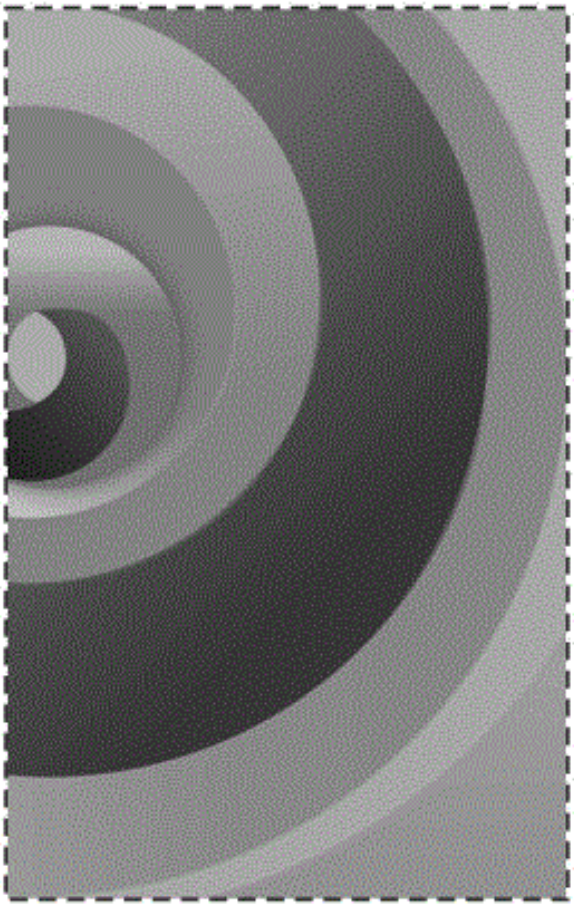

FRONT VIEW

21: A2023/00278 22: 2023-02-27 23:
43: 2023-09-06
52: Class 32 24: Part A
71: PHILIP MORRIS PRODUCTS S.A.
33: EU 31: 009163181-0009 32: 2022-09-02
54: PACKAGING, PACKAGING BOX (PART OF-) OR ORNAMENTATION FOR PACKAGING, IN PARTICULAR FOR AEROSOL GENERATING DEVICE PACKAGING
57: The design is to be applied to a packaging, packaging box (part of-) or ornamentation for packaging, in particular for aerosol generating device packaging. The features for which protection is claimed are those of shape and/or configuration and/or pattern and/or ornamentation, substantially as shown in the representations. The broken lines are for illustrative purposes only and form no part of the claimed design. The design is represented in

greyscale that shows a certain contrast compared with brighter or darker adjacent areas, however, the design shall not be limited to the color grey, but in embodiments may encompass any color or combination of colors.



FRONT VIEW

21: F2021/01030 22: 2021-09-06 23:
43: 2023-10-09
52: Class 9 24: Part F
71: RI INVESTMENTS (PTY) LTD
54: BOTTLE CARRIER
57: The design relates to a bottle carrier. The features of the design are those of shape and/or configuration and/or pattern.

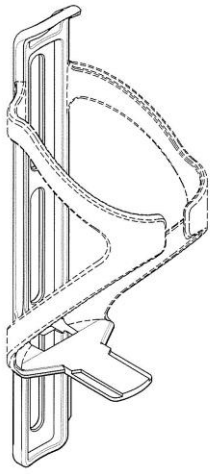

TOP FRONT
PERSPECTIVE VIEW

21: F2022/00586 22: 2022-05-25 23:
43: 2023-08-10
52: Class 9. 24: Part F
71: MPACT LIMITED
54: Blank for a Carton
57: The design relates to blank for a carton. The features of the design are those of shape and/or configuration.

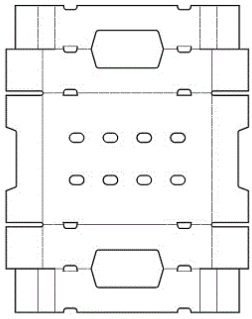

TOP PLAN VIEW OF BLANK

21: F2022/01581 22: 2022-12-07 23:
43: 2023-07-14
52: Class 13 24: Part F
71: SMT SCHARF AFRICA (PTY) LTD
54: BATTERY PACK
57: The design is in respect of the shape and/or configuration of a battery pack substantially as shown in the respresentations and which includes a cooling system with a coolant reticulation network which passes through an outer housing and connects the pack of battery modules whereby coolant may circulate through the modules for removal of heat generated by the modules.. The colours used on the drawings are for ease of identification of the components and do not limit the

scope of the design which does not include any specific colours.

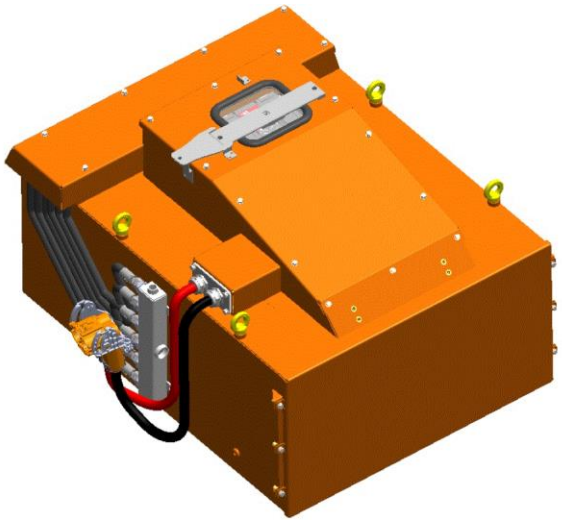

21: F2022/01590 22: 2022-12-08 23:
43: 2023-08-14
52: Class 07 24: Part F
71: Polyoak Packaging (Pty) Ltd
54: TUB
57: The features of the design for which protection is claimed include the shape and/or configuration and/or pattern of an article substantially as shown in the accompanying representation(s).

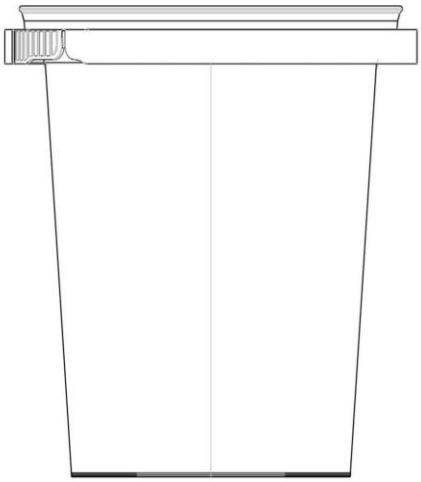

21: F2023/00072 22: 2023-01-16 23:
43: 2022-10-05
52: Class 8 24: Part F
71: ADAMS, Frederik Jacobus
54: Step Drill Bits
57: This design relates to a drill bit, particularly a step drill bit for facilitating drilling of stepped holes substantially as shown in the representations. The bit has a body having an attachment end portion for attaching the bit to a suitable drilling tool or implement and an opposite drilling portion spaced along a longitudinal axis of the bit from the attachment end portion. The drilling portion comprises a first drill portion and a second drill portion, the second drill portion being of larger diameter than the first drill portion.

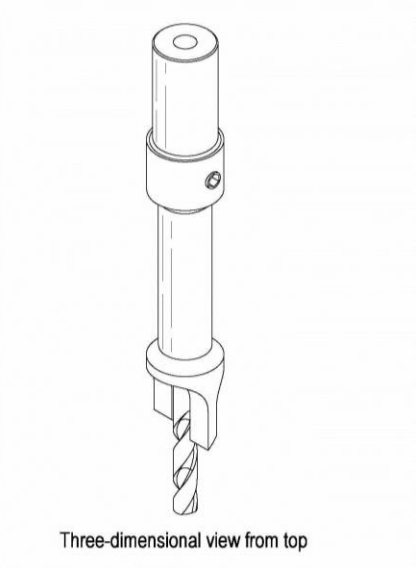

21: F2023/00080 22: 2023-01-17 23:
43: 2023-08-14
52: Class 13 24: Part F
71: Hubble Lithium (Pty) Ltd
54: BATTERY ENCLOSURE
57: The design is applied to a battery enclosure. The features of the design for which protection is claimed are those of the shape and/or configuration and/or pattern of the battery enclosure, substantially as illustrated in the accompanying representation.

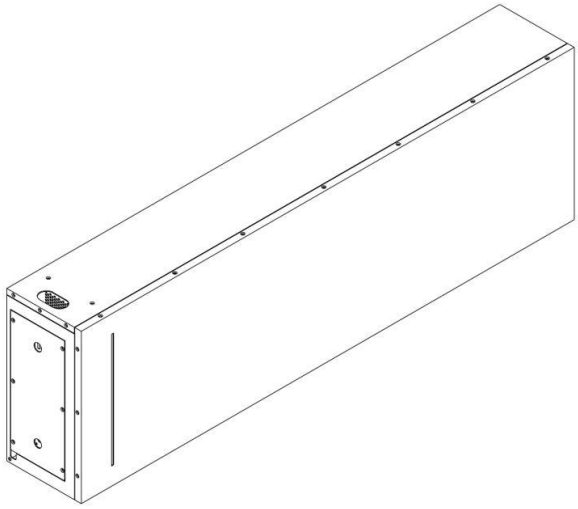

21: F2023/00088 22: 2023-01-23 23:
43: 2023-08-14
52: Class 09 24: Part F
71: Polyoak Packaging (Pty) Ltd
54: CAP
57: The features of the design for which protection is claimed include the shape and/or configuration and/or pattern of an article substantially as shown in the accompanying representation(s).



21: F2023/00116 22: 2023-01-26 23:
43: 2023-01-26
52: Class 13 24: Part F
71: WSR IP (PTY) LTD.
54: LOW VOLTAGE CONNECTOR PANELS
57: The design is for a low voltage connector panel, which is particularly suitable for installation in a vehicle with a 12 Volt electrical system. The panel includes a housing which is rectangular in outline in front view. The housing comprises side walls that are initially perpendicular to a planar rear panel of the housing, and which then slant inwardly towards a two-plane panel face which is bordered by a projecting lip along a top and sides of the panel face. End portions of the lip project downwardly and outwardly towards front bottom corners of the housing. A top plane of the panel face is parallel to the planar rear panel of the housing, whereas a bottom plane of the panel face slants rearwardly and downwardly away from the top plane. Various electrical sockets and connectors may be accessible through the panel face, which may also carry an on-off switch.

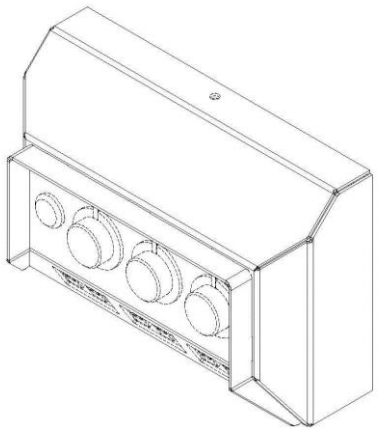

21: F2023/00121 22: 2023-01-26 23:
43: 2023-01-26
52: Class 9 24: Part F
71: SolvPac (Pty) Ltd
54: Container Lids
57: This design relates to a lid for a container having a sectional end profile substantially as illustrated in the accompanying representations. The lid has a generally circular profile. The lid comprises a peripheral rim portion defining a groove for the location of an open end of a container therein, a raised ridge portion, a valley portion connecting the rim portion and the ridge portion, and a central portion extending at an interion of the ridge portion, wherein the rim portion, ridge portion, valley portion, and central portion are co-axially and concentrically arranged around a central axis, wherein the central portion is concavely curved in a first position and is displaceable/deformable to a convexly curved second position, in use.

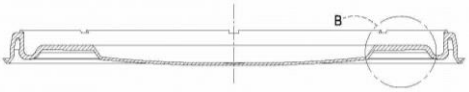

Figure 1: Sectional end view

21: F2023/00126 22: 2023-01-27 23:
43: 2023-08-14
52: Class 09 24: Part F
71: Polyoak Packaging (Pty) Ltd
54: PULL TAB
57: The features of the design for which protection is claimed include the shape and/or configuration and/or pattern of an article substantially as shown in the accompanying representation(s).

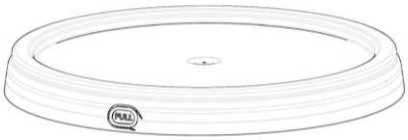

21: F2023/00148 22: 2023-02-02 23:
43: 2023-09-05
52: Class 12 24: Part F
71: Austin Engineering Limited
33: AU 31: 202214576 32: 2022-08-05
54: TRUCK BODIES
57: The features of the design for which protection is claimed include the pattern and/or shape and/or configuration of a truck body, substantially as shown in the representation. The features indicated in dotted lines are for illustrative purposes only and disclaimed.

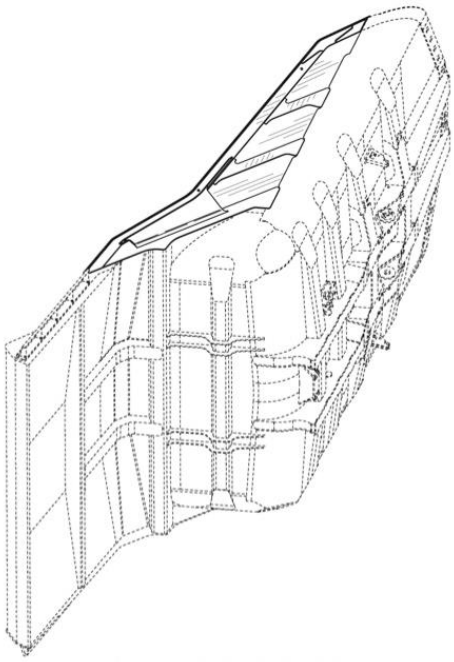

A lower perspective view of the truck body

21: F2023/00176 22: 2023-02-09 23:
43: 2023-09-05
52: Class 07 24: Part F
71: 18 TEN ACCESSORIES CC
54: A COOKING APPARATUS
57: The design is applied to a cooking apparatus. The features of the design for which protection is claimed are those of the shape and/or configuration and/or pattern of the cooking apparatus, substantially as illustrated in the accompanying representations. Features of the cooking apparatus shown in broken lines do not form part of the design and are disclaimed.

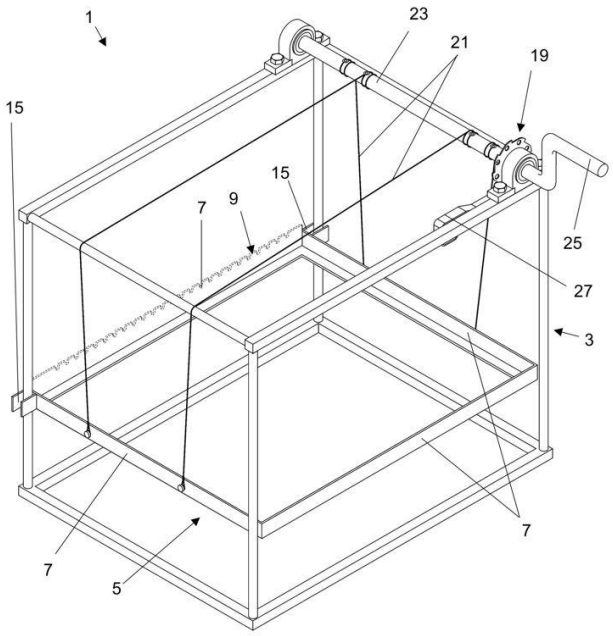

FIG. 1 THREE-DIMENSIONAL VIEW

21: F2023/00178 22: 2023-02-09 23:
43: 2023-09-05
52: Class 07 24: Part F
71: 18 TEN ACCESSORIES CC
54: A COOKING ACCESSORY
57: The design is applied to a cooking accessory. The features of the design for which protection is claimed are those of the shape and/or configuration and/or pattern of the cooking accessory, substantially as illustrated in the accompanying representation. Features of the cooking accessory shown in broken lines do not form part of the design and are disclaimed.

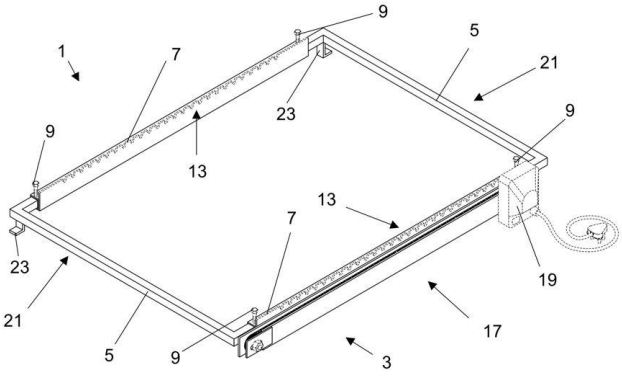

FIG. 1 THREE-DIMENSIONAL VIEW OF A COOKING ACCESSORY IN A COLLAPSED CONDITION

21: F2023/00868 22: 2023-07-27 23:

43: 2023-09-05
52: Class 23 24: Part F
71: The Best Trust
54: VALVE
57: The design relates to a Valve. The features of the design are those of shape and/or pattern and/or configuration.

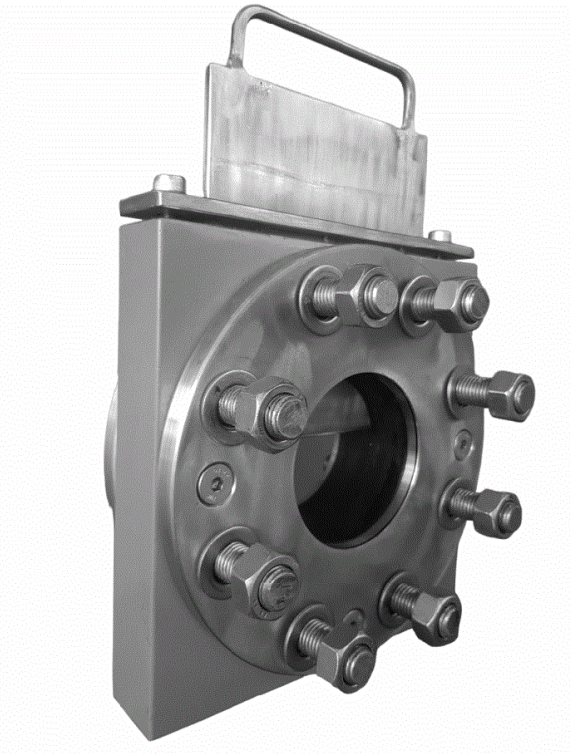

21: F2023/00883 22: 2023-07-31 23:
43: 2023-09-05
52: Class 8 24: Part F
71: SUIDWESHK (PTY) LTD
54: WALL MOUNT ADAPTOR
57: The design relates to a Wall mount adaptor. The features of the design are those of shape and/or pattern and/or configuration.

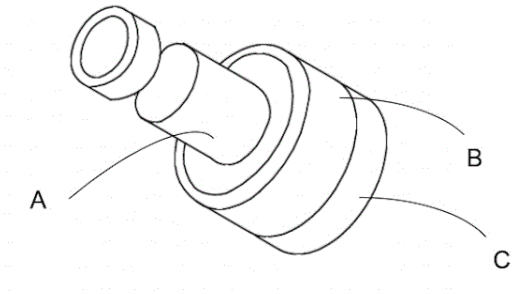

21: F2023/00884 22: 2023-07-31 23:
43: 2023-09-05
52: Class 8 24: Part F
71: SUIDWESHK (PTY) LTD
54: WALL PLUG
57: The design relates to a Wall plug. The features of the design are those of shape and/or pattern and/or configuration.

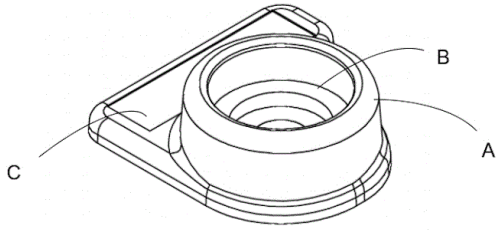

HYPOTHECATIONS

No records available

JUDGMENTS

No records available

OFFICE PRACTISE NOTICES

No records available

4. COPYRIGHT

COPYRIGHT IN CINEMATOGRAPH FILMS

NOTICES OF ACCEPTANCE

(Applications filed in terms of Act No. 62 of 1977)

Any person, who has grounds for objection to the registration of the copyright in any of the following cinematographs films, may within the prescribed time, lodge Notice of Opposition on Form RF 5 contained in the Second Schedule to the Registration of Copyright in Cinematograph Films Regulations, 1980. The prescribed time is one month after the date of advertisement. This period may on application be extended by the Registrar.

The numerical denote the following: **(21)** Official application number. **(22)** Date of application. **(43)** Date of acceptance. **(24)** Date(s) and place(s) at which cinematograph films was made. **(25)** Date and place of first publication. **(71)** Name (s) of all applicant (s). **(75)** Name of author. **(76)** Name of producer **(77)** Name of director **(54)** Title of cinematograph film. **(78)** Name(s) of principal players or narrator. **(26)** Places at which cinematograph film may be viewed and conditions. **(55)** Specimen lodged/Not lodged. **(56)** Preview requested/Not requested. **(57)** Abstract (Storyline). **(58)** Category.

No records available

HYPOTHECATIONS

No records available

JUDGMENTS

No records available

OFFICE PRATISE NOTICES

No records available

5. CORRECTION NOTICES

TRADE MARK CORRECTION NOTICES

The trade marks under application no: **2019/34792 & 2019/34793** were advertised in the September 2023 journal with an incorrect disclaimer which read as: Registration of this trade mark shall give no right to the exclusive use of the words **"UBER" and "PRO",** separately and apart from the mark **instead of** Registration of this mark shall give no right to the exclusive use of the word **"PRO"** separately and apart from the mark. These two trade marks should have appeared like the below publications but the publication date will remain the **27/09/2023.**

2019/34792 in Class 09: Computer software; downloadable software for users to administer, access, monitor, and manage loyalty programs and rewards; downloadable software for earning, tracking, and redeeming loyalty rewards, points, and discounts. in the name of UBER TECHNOLOGIES, INC., a corporation of the State of Delaware,1515 3rd Street, San Francisco, California 94158, United States of America. Address for service: VON SEIDELS, 4 East Park, Central Park on Park Lane, Century City, 7441, SOUTH AFRICA

UBER PRO

Associated with: 2019/34793

Registration of this mark shall give no right to the exclusive use of the word "PRO" separately and apart from the mark.

FILED: 2019-12-04

2019/34793 in Class 35: Business management; business administration; office functions; arranging and conducting incentive rewards programs; providing rewards programs for customers; arranging and providing discount programs to customers; membership rewards programs; providing a website; providing a website featuring information about discount and rewards programs; providing a website featuring information about incentive programs; arranging and conducting incentive rewards programs to incentivize engagement with a ridesharing platform; providing rewards programs for customers to earn fuel discounts and rebates, school tuition, car maintenance and repair discounts, roadside assistance, priority rideshare matching, rideshare trip routing and duration information and access to rideshare promotions; arranging and providing discount programs to customers to obtain discounts on the cost of services or receive improved services; membership rewards programs to incentivize engagement with a ridesharing platform; providing a website featuring information about discount and rewards programs; customer relationship management (CRM); arranging and conducting incentive rewards programs, including administration of loyalty programs enabling members to obtain access to exclusive discounts, offers, promotions, rewards, and features from retailers and service providers. in the name of UBER TECHNOLOGIES, INC., a corporation of the State of Delaware,1515 3rd Street, San Francisco, California 94158, United States of America. Address for service: VON SEIDELS, 4 East Park, Central Park on Park Lane, Century City, 7441, SOUTH AFRICA

UBER PRO

Associated with: 2019/34792

Registration of this mark shall give no right to the exclusive use of the word "PRO" separately and apart from the mark.

FILED: 2019-12-04

PATENT CORRECTION NOTICES

No records available

COPYRIGHT CORRECTION NOTICES

No records available

PATENTS

Advertisement List for October 2023

Number of Advertised Patents: 631

Application Number	Patent Title	Filing Date
2013/00697	TRANSMISSION METHOD, TRANSMISSION DEVICE, RECEPTION METHOD, AND RECEPTION DEVICE	2013/01/25
2014/06369	AN ILOPERIDONE METABOLITE FOR USE IN THE TREATMENT OF PSYCHIATRIC DISORDERS	2014/08/29
2014/08080	PROCESSOR ASSIST FACILITY	2014/11/04
2015/02327	SELF EXCITING ALTERNATOR CIRCUIT	2015/04/08
2015/07732	ENCAPSULATION METHOD	2015/10/15
2015/08924	PRESERVED ETHERIFIED CYCLODEXTRIN DERIVATIVES CONTAINING LIQUID AQUEOUS PHARMACEUTICAL COMPOSITION	2015/12/07
2016/05657	TREATMENT OF CANCER USING ANTI-CD19 CHIMERIC ANTIGEN RECEPTOR	2016/08/16
2017/01334	COMPOSITIONS CONTAINING LIPO-CHITOOLIGOSACCHARIDE AND MICROORGANISM FOR ENHANCING PLANT GROWTH	2017/02/22
2017/02974	ICE CUBE PRODUCING UNIT	2017/04/28
2017/03409	PRODRUGS OF PHENOLIC TRPV1 AGONISTS	2017/05/17
2017/04338	SYNTHESIS OF A BRUTON'S TYROSINE KINASE INHIBITOR	2017/06/26
2017/04903	MODIFIED DNASE AND USES THEREOF	2017/07/19
2017/06790	APPARATUS AND METHOD FOR CRACKING STONE FRUIT NUTS	2017/10/09
2017/07152	METHODS FOR HYDRAULIC ENHANCEMENT OF CROPS	2017/10/20
2017/07500	METHODS AND SYSTEMS FOR MULTIPLE TAXONOMIC CLASSIFICATION	2017/11/06
2017/07645	ANTI-CD71 ANTIBODIES, ACTIVATABLE ANTI-CD71 ANTIBODIES, AND METHODS OF USE THEREOF	2017/11/10
2017/07673	SLOW DISSOLVING HYPOCHLORITE CONTAINING TABLET	2017/11/13
2017/07869	ANTI-NTB-A ANTIBODIES AND RELATED COMPOSITIONS AND METHODS	2017/11/20
2017/08420	CLIPS FOR JOINTING DEVICES OF THE ENDS OF A CONVEYOR BELT	2017/12/12
2018/00056	NICOTINAMIDE RIBOSIDE AND PTEROSTILBENE COMPOSITIONS AND METHODS FOR TREATMENT OF SKIN DISORDERS	2018/01/04
2018/00194	COMPOSITION AND SYSTEM FOR	2018/01/10

Application Number	Patent Title	Filing Date
	ATTRACTING LEPIDOPTEROUS INSECTS	
2018/00215	PROTEIN-RICH BIOMASS OF THRAUSTOCHYTRIDS, CULTURING METHOD AND USES	2018/01/11
2018/01676	METHOD AND APPARATUS FOR TRANSMITTING WIRELESS LOCAL AREA NETWORK INFORMATION	2018/03/12
2018/03002	SOLID HERBICIDE COMPOSITIONS CONTAINING FLUROXYPYR-MEPTYL	2018/05/08
2018/03243	FILTER ELEMENT FOR A FILTER APPARATUS	2018/05/16
2018/03475	CONDENSED BICYCLIC HETEROCYCLE DERIVATIVES AS PEST CONTROL AGENTS	2018/05/25
2018/04189	CANNULA FOR MINIMIZING DILUTION OF DOSING DURING NITRIC OXIDE DELIVERY	2013/12/04
2018/04829	PSMA AND CD3 BISPECIFIC T CELL ENGAGING ANTIBODY CONSTRUCTS	2018/07/18
2018/05009	STABLE INOCULANT COMPOSITIONS AND METHODS FOR PRODUCING SAME	2018/07/25
2018/06566	FLOATING PLATFORM	2018/10/03
2018/06690	OXIDATION CATALYST FOR LEAN COMPRESSED NATURAL GAS ENGINE	2018/10/08
2018/06973	CO RICH SYNTHESIS GAS PRODUCTION	2018/10/18
2018/07031	FULVESTRANT FORMULATIONS AND METHODS OF THEIR USE	2018/10/22
2018/07214	METHOD AND APPARATUS FOR PROVIDING A PHARMACOKINETIC DRUG DOSING REGIMENT	2018/10/29
2018/07393	TREATMENT OF NEUROLOGICAL DISORDERS	2018/11/05
2018/07626	METHOD FOR PURIFICATION AND ACTIVATION OF BOTULINUM NEUROTOXIN	2018/11/13
2018/07992	METHOD OF TREATING LIVER FIBROSIS	2018/11/26
2018/08054	ALIPHATIC PROLINAMIDE DERIVATIVES	2018/11/28
2018/08214	PRODUCTION OF A HORSERADISH PEROXIDASE-IGG FUSION PROTEIN	2018/12/05
2018/08537	COMBINATION THERAPIES	2018/12/18
2019/00447	ORAL CARE COMPOSITIONS	2019/01/22
2019/00512	BLOCKCHAIN-IMPLEMENTED METHOD AND SYSTEM	2019/01/24
2019/01781	ANTI-PD1 MONOCLONAL ANTIBODY, PHARMACEUTICAL COMPOSITION THEREOF AND USE THEREOF	2019/03/22
2019/01785	HEAT EXCHANGE MODULE, SYSTEM AND METHOD	2019/03/22
2019/01912	TERLIPRESSIN COMPOSITIONS AND THEIR METHODS OF USE	2019/03/27
2019/02056	COMPOSITIONS AND METHODS OF PET FOOD	2019/04/02
2019/02531	A MULTISTAGE HAMMER MILL AND A RESIDUE PROCESSING SYSTEM INCORPORATING SAME	2019/04/23

Application Number	Patent Title	Filing Date
2019/02932	SYSTEMS AND METHODS FOR POWER PRODUCTION WITH INTEGRATED PRODUCTION OF HYDROGEN	2019/05/10
2019/03096	A PROCESS FOR PREPARING AN EXTRUDABLE COMPOSITION COMPRISING A TITANIUM-CONTAINING ZEOLITIC MATERIAL HAVING FRAMEWORK TYPE MWW	2019/05/17
2019/03291	FUSED BICYLIC PYRIDINE COMPOUNDS AND THEIR USE AS AMPA RECEPTOR MODULATORS	2019/05/24
2019/04279	SECURING ASSEMBLY	2019/06/28
2019/04647	METHOD FOR OBTAINING PURE BUTYL ACRYLATE FROM RAW BUTYL ACRYLATE BY DISTILLATION, WHEREIN BUTYL STANDS FOR N-BUTYL OR ISOBUTYL	2019/07/16
2019/05265	ARC SPLITTER PLATE	2019/08/08
2019/05866	ANTI-C5 ANTIBODIES AND USES THEREOF	2019/09/05
2019/06082	FUNGICIDAL COMPOSITIONS	2019/09/13
2019/06085	BROILER PAN FEEDER	2019/09/13
2019/06787	CYLINDER LOCK	2019/10/15
2019/06854	COOLING SYSTEM FOR A SURFACE OF A METALLURGICAL FURNACE	2019/10/17
2019/06881	METHODS AND SYSTEMS FOR HIGH-THROUGHPUT BLOOD COMPONENT COLLECTION	2019/10/18
2019/06992	A COMMUNICATION METHOD AND APPARATUS	2019/10/23
2019/07028	FABRIC CARE COMPOSITION	2019/10/24
2019/07070	METHOD AND BURNER FOR HEATING A FURNACE FOR METAL PROCESSING	2019/10/25
2019/07113	METHOD OF APPLYING A MULTILAYER WET-ON-WET COATING TO A SUBSTRATE	2019/10/28
2019/07144	SOLID FORM OF (S)-[2-CHLORO-4-FLUORO-5-(7-MORPHOLIN-4-YLQUINAZOLIN-4-YL)PHENYL]-(6-METHOXY-PYRIDAZIN-3-YL)METHANOL	2019/10/29
2019/07520	STABLE LIQUID FORMULATIONS OF PROTHIOCONAZOLE	2019/11/13
2019/07746	6-5 FUSED RINGS AS C5A INHIBITORS	2019/11/22
2019/07789	SOLID COMPOSITIONS FOR ORAL ADMINISTRATION	2019/11/25
2019/07838	SYSTEM AND METHOD OF MULTI-ROUND TOKEN DISTRIBUTION USING A BLOCKCHAIN NETWORK	2019/11/26
2019/08218	ROLLER MILL AND METHOD FOR OPERATING A ROLLER MILL	2019/12/10
2019/08405	METHOD AND APPARATUS FOR PRODUCING A YARN	2019/12/17
2019/08446	COMBINATION OF A MCL-1 INHIBITOR AND A STANDARD OF CARE TREATMENT FOR HEMATOLOGIC CANCERS, USES AND	2019/12/18

Application Number	Patent Title	Filing Date
	PHARMACEUTICAL COMPOSITIONS THEREOF	
2019/08488	SUBSTITUTED NITROGEN CONTAINING COMPOUNDS	2019/12/19
2019/08551	SYSTEMS AND METHODS FOR BLOCKCHAIN-DEPENDENT OPERATION SETS	2019/12/20
2019/08610	IL-15 PROTEIN COMPLEX PHARMACEUTICAL COMPOSITION AND USES THEREOF	2019/12/23
2020/00027	CONSTRUCTS SPECIFICALLY RECOGNIZING GLYPICAN 3 AND USES THEREOF	2020/01/02
2020/00409	SCREENING PLATFORM TO IDENTIFY THERAPEUTIC DRUGS OR AGENTS FOR TREATMENT OF ALZHEIMER'S DISEASE	2020/01/21
2020/00411	POLYMORPHS OF 5-FLUORO-4-IMINO-3-METHYL-1-TOSYL-3,4-DIHYDROPYRIMIDIN-2-ONE	2020/01/21
2020/00432	HARDENED FAN-OUT ARRANGEMENT	2020/01/22
2020/00433	NORMALIZING TENSION DISTRIBUTION AND MINIMIZING SIDEWALL ABRASION WITHIN ANGULAR DRIVE BELT SYSTEMS	2020/01/22
2020/00548	HERBICIDAL COMPOSITIONS COMPRISING 4-AMINO-3-CHLORO-5-FLUORO-6-(4-CHLORO-2-FLUORO-3-METHOXYPHENYL) PYRIDINE-2-CARBOXYLIC ACID OR A DERIVATIVE THEREOF AND TEMBOTRIONE AND/OR TOPRAMEZONE	2020/01/27
2020/00674	DETECTION OF CARBAPENEMASE-PRODUCING ENTEROBACTERIALES, PSEUDOMONAS AND ACINETOBACTER SPECIES USING A CHROMOGEN	2020/01/31
2020/00704	MINING OR CONSTRUCTION VEHICLE	2020/02/03
2020/00852	T CELL RECEPTOR-DEFICIENT CHIMERIC ANTIGEN RECEPTOR T-CELLS AND METHODS OF USE THEREOF	2020/02/10
2020/00857	BURNER WITH A SLURRY COATING, WITH HIGH RESISTANCE TO METAL DUSTING	2020/02/10
2020/00931	SYSTEM AND METHOD FOR INTERFERENCE REDUCTION IN RADIO COMMUNICATIONS	2020/02/13
2020/01000	DATA BREACH SCORE AND METHOD	2020/02/17
2020/01027	VASOPRESSIN RECEPTOR ANTAGONISTS AND PRODUCTS AND METHODS RELATED THERETO	2020/02/18
2020/01057	INHIBITING UBIQUITIN SPECIFIC PEPTIDASE 30	2020/02/19
2020/01074	INHIBITORS OF A-AMINO-B-CARBOXYMUCONIC ACID SEMIALDEHYDE DECARBOXYLASE	2020/02/20

Application Number	Patent Title	Filing Date
2020/01086	SYSTEM, APPARATUS AND METHOD FOR PRODUCING GALLIUM RADIOISOTOPES ON PARTICLE ACCELERATORS USING SOLID TARGETS AND GA-68 COMPOSITION PRODUCED BY SAME	2020/02/20
2020/01152	SIMULTANEOUS NITRIFICATION/DENITRIFICATION (SNDN) IN SEQUENCING BATCH REACTOR APPLICATIONS	2020/02/24
2020/01256	IL-33 ANTAGONIST-CONTAINING THERAPEUTIC AGENT FOR ENDOMETRIOSIS	2020/02/27
2020/01258	METHODS OF USING DANTROLENE TO TREAT NERVE AGENT EXPOSURE	2020/02/27
2020/01315	AQUEOUS SPRAY COMPOSITION	2020/02/28
2020/01320	COMPOUNDS AND COMPOSITIONS FOR IRE1 INHIBITION	2020/02/28
2020/01321	INDAZOLE COMPOUNDS AS MGLUR4 ALLOSTERIC POTENTIATORS, COMPOSITIONS, AND METHODS OF TREATING NEUROLOGICAL DYSFUNCTION	2020/02/28
2020/01417	ZEOLITE WITH REDUCED EXTRA-FRAMEWORK ALUMINUM	2020/03/05
2020/01445	EXON 18 AND/OR EXON 21 MUTANT EGFR SELECTIVE INHIBITOR	2020/03/06
2020/01571	PYRIDINE AND PYRIMIDINE CARBOXYLATE HERBICIDES AND METHODS OF USE THEREOF	2020/03/12
2020/01681	SPATIAL DATA PROCESSING SYSTEM AND METHOD	2020/03/17
2020/01720	ORAL CARE COMPOSITIONS AND METHODS FOR INCREASING STABILITY OF THE SAME	2020/03/18
2020/01755	ORAL CARE COMPOSITIONS	2020/03/19
2020/01816	DENTIFRICE COMPRISING ZINC - AMINO ACID COMPLEX	2020/03/23
2020/01824	PERSONAL CARE COMPOSITIONS	2020/03/23
2020/01909	ORAL CARE COMPOSITIONS	2020/03/24
2020/02074	SUB-BLOCK MOTION DERIVATION AND DECODER-SIDE MOTION VECTOR REFINEMENT FOR MERGE MODE	2020/05/04
2020/02083	ANTIBODY PURIFICATION	2020/05/04
2020/02129	ORAL BENDAMUSTINE FORMULATIONS	2020/05/04
2020/02213	GEOGRIDS	2020/05/04
2020/02317	SAMPLE ACQUIRING DEVICE HOLDER FOR A HOUSING OF AN ANALYSIS APPARATUS	2020/05/04
2020/02325	CONSTRAINED CONDITIONALLY ACTIVATED BINDING PROTEINS	2020/05/04
2020/02361	COMPOUND HAVING CYCLIC STRUCTURE	2020/05/04
2020/02372	PYRIDINE CARBONYL DERIVATIVES AND THERAPEUTIC USES THEREOF AS TRPC6	2020/05/04

Application Number	Patent Title	Filing Date
	INHIBITORS	
2020/02378	FORMULATIONS OF COPANLISIB	2020/05/04
2020/02456	ZEOLITE SYNTHESIS IN A REACTOR WITH CONTROLLED VELOCITY PROFILE	2020/05/05
2020/02531	IMMUNOPROTEASOME INHIBITORS	2020/05/07
2020/02550	ACOUSTIC MIXERS	2020/05/07
2020/02595	RADIO LINK MONITORING/RADIO LINK FAILURE RE-CONFIGURATION UPON BANDWIDTH PARTS SWITCHING	2020/05/08
2020/02611	PROCESSES FOR THE PREPARATION OF PYRIMIDINYLCYCLOPENTANE COMPOUNDS	2020/05/11
2020/02746	THIN FILM ADHESIVE LABELS AND METHODS OF MAKING THEREOF	2020/05/13
2020/02779	DANTROLENE PRODRUGS AND METHODS OF THEIR USE	2020/05/14
2020/02832	ACTIVE COMPOUND COMBINATIONS HAVING INSECTICIDAL/ACARICIDAL PROPERTIES	2020/05/15
2020/02845	CATALYZED SOOT FILTER WITH REDUCED AMMONIA OXIDATION	2020/05/15
2020/02897	FULVESTRANT FORMULATIONS AND METHODS OF THEIR USE	2020/05/18
2020/02951	ALBUMIN-BINDING PRODRUGS OF AURISTATIN E DERIVATIVES	2020/05/20
2020/03001	ELECTRONIC AEROSOL PROVISION SYSTEM	2020/05/21
2020/03022	MINIMAL SAPONIN ANALOGUES, SYNTHESIS AND USE THEREOF	2020/05/22
2020/03146	MOSQUITO REPELLENT COMPOSITION	2020/05/27
2020/03189	SYSTEM AND METHOD FOR ADAPTIVE BRAKING	2020/05/28
2020/03249	A DUAL-COLUMN LC-MS SYSTEM AND METHODS OF USE THEREOF	2020/05/29
2020/03281	HETEROCYCLE SUBSTITUTED PYRIDINE DERIVATIVE ANTIFUNGAL AGENTS	2020/06/02
2020/03320	GLUCURONYLATION AS ACIDIC POST-TRANSLATIONAL MODIFICATION ON THERAPEUTIC MONOCLONAL ANTIBODIES	2020/06/03
2020/03475	COMPOUNDS AND SYNTHETIC METHODS FOR THE PREPARATION OF RETINOID X RECEPTOR-SPECIFIC RETINOIDS	2020/06/10
2020/03596	A SET OF PANELS, A METHOD FOR ASSEMBLY OF THE SAME AND A LOCKING DEVICE FOR A FURNITURE PRODUCT	2020/06/15
2020/03638	METHOD OF IDENTIFYING AND ISOLATING BIOACTIVE COMPOUNDS FROM SEAWEED EXTRACTS	2020/06/17
2020/03831	MODIFIED NOROVIRUS VP1 PROTEINS AND VLPS COMPRISING MODIFIED NOROVIRUS VP1 PROTEINS	2020/06/24
2020/03848	BARLEY WITH INCREASED HYDROLYTIC	2020/06/24

Application Number	Patent Title	Filing Date
	ENZYME ACTIVITY	
2020/04022	A DISPERSANT COMPOSITION	2020/07/01
2020/04176	PROCESS FOR PRODUCING GLYCEROL CARBONATE METHACRYLATE	2020/07/08
2020/04221	PARISON PLUNGER ACTUATION	2020/07/09
2020/04253	BLOCKCHAIN-IMPLEMENTED SYSTEMS AND METHODS FOR CONCURRENT BYTECODE INTERPRETATION	2020/07/10
2020/04344	NANOPARTICLES FOR USE FOR TREATING A NEURONAL DISORDER	2020/07/15
2020/04386	METHODS PROVIDING RACH OCCASION INDICATION FOR RANDOM ACCESS PROCEDURE INITIATED BY PDCCH ORDER AND RELATED WIRELESS TERMINALS AND BASE STATIONS	2020/07/16
2020/04559	PHYTOCONSTITUENT FOR TREATING DIABETES	2020/07/23
2020/04679	REGENERATION OF GENETICALLY MODIFIED PLANTS	2020/07/29
2020/04979	AEROSOL GENERATION ARTICLE	2020/08/12
2020/05242	HIGH-DENSITY PLANT CULTIVATION SYSTEMS AND RELATED APPARATUSES AND METHODS	2020/08/24
2020/05400	QUICK-RELEASE COUPLING FOR DRILLING AND RELATED METHODS	2020/08/28
2020/06225	SYSTEM AND METHOD FOR WIRELESS TRANSACTIONS	2020/10/07
2020/06397	METHOD AND APPARATUS FOR PERFORMING A TOMOGRAPHIC EXAMINATION OF AN OBJECT	2020/10/15
2020/06517	INTEGRATION OF HIGH FREQUENCY RECONSTRUCTION TECHNIQUES WITH REDUCED POST-PROCESSING DELAY	2020/10/20
2020/06518	INTEGRATION OF HIGH FREQUENCY AUDIO RECONSTRUCTION TECHNIQUES	2020/10/20
2020/06632	AN APPARATUS OPERABLE TO DISPLAY ONE OR MORE DIGITAL ARTWORK/S	2020/10/23
2020/07418	ORAL CARE COMPOSITION	2020/11/27
2020/07572	GLP-1 RECEPTOR AGONISTS AND USES THEREOF	2020/12/04
2020/07714	SYSTEM AND METHOD FOR REAL TIME PREDICTION OF WATER LEVEL AND HAZARD LEVEL OF A DAM	2020/12/10
2021/00014	ADAPTIVE CONTROL POINT SELECTION FOR AFFINE MOTION MODEL BASED VIDEO CODING	2021/01/04
2021/00028	IMPROVED SELF-DESTRUCTIVE DOCUMENTS FOR INFORMATION SECURITY AND PRIVACY PROTECTION	2021/01/04
2021/00079	SYSTEM AND METHOD FOR EVALUATING ELUTION EFFICIENCY AND RADIOPURITY OF TC-99M GENERATORS	2021/01/05

Application Number	Patent Title	Filing Date
2021/00167	THERMOLYTIC FRAGMENTATION OF SUGARS USING RESISTANCE HEATING	2021/01/11
2021/00390	FUSION CONSTRUCTS AND METHODS OF USING THEREOF	2021/01/19
2021/00427	VENTILATION MASK	2021/01/20
2021/00486	PESTICIDAL MIXTURES COMPRISING INDAZOLES	2021/01/22
2021/00571	ISOXAZOLINE COMPOUNDS FOR CONTROLLING INVERTEBRATE PESTS	2021/01/26
2021/00593	HETEROARYL-SUBSTITUTED SULFONAMIDE COMPOUNDS AND THEIR USE AS THERAPEUTIC AGENTS	2021/01/27
2021/00594	SOLID CLEANSING COMPOSITIONS AND METHODS FOR THE SAME	2021/01/27
2021/00602	A METHOD FOR PRODUCING METHANOL IN A REACTOR WITH BYPASS	2021/01/27
2021/00618	SYSTEM FOR PREHEATING GLASS MELTING FURNACE BATCH MATERIALS	2021/01/28
2021/00676	ANTI-TIGIT ANTIBODY AND USES THEREOF	2021/01/29
2021/00682	DEVICE OPERATION CONTROL	2021/01/29
2021/00844	CART LOCKING AND DISPENSING DEVICE	2021/02/08
2021/00888	METHODS OF PREPARING PERSONALIZED BLOOD VESSELS	2021/02/09
2021/00928	GLOBAL ADDRESS SYSTEM AND METHOD	2021/02/10
2021/00952	SELF-ASSEMBLING PEPTIDE SCAFFOLD	2021/02/11
2021/00955	THROMBIN INHIBITORS, FORMULATIONS, AND USES THEREOF	2021/02/11
2021/00958	A CRUSHER MANTLE LIFTING DEVICE, AN ARRANGEMENT AND A METHOD	2021/02/11
2021/00996	TEAR-OFF BAKING CONTAINER	2021/02/12
2021/01023	PATCH	2021/02/15
2021/01041	SOLAR CONCENTRATOR, SOLAR RECEIVER AND THERMAL STORAGE	2021/02/16
2021/01058	SCRATCH MASKING COATING SOLUTION FOR GLASS CONTAINERS	2021/02/16
2021/01099	SET OF PANELS WITH A MECHANICAL LOCKING DEVICE	2021/02/17
2021/01180	PROCESS FOR THE PREPARATION OF METHANOL	2021/02/22
2021/01186	A STABLE LIQUID AGROCHEMICAL FORMULATION	2021/02/22
2021/01233	A LINING ARRANGEMENT, AND A METHOD FOR FASTENING LINING ELEMENTS TO A SUPPORT STRUCTURE	2021/02/24
2021/01358	CHIMERIC ANTIGEN RECEPTORS AGAINST MULTIPLE HLA-G ISOFORMS	2021/02/26
2021/01374	A TELESCOPIC EDGE PROTECTION POST	2021/02/26
2021/01409	A METHOD FOR UTILIZING METAL OXIDE CONTAINING SIDE STREAMS IN FERROCHROME SMELTING PROCESSES	2021/03/01
2021/01539	CONVEYING APPARATUS AND METHOD	2021/03/05

Application Number	Patent Title	Filing Date
	OF CONVEYING TAMPON APPLICATORS	
2021/01565	BATTERY WITH HALOGEN SEQUESTERING AGENT	2021/03/08
2021/01805	ORAL CARE COMPOSITIONS AND METHODS FOR THE SAME	2021/03/17
2021/01850	PROCESS FOR PREPARING C2-C5 HYDROCARBONS USING A HYBRID CATALYST	2021/03/18
2021/01869	SYSTEM AND METHOD FOR DRIVING A LOAD WITH A RENEWABLE ENERGY SOURCE	2021/03/19
2021/01893	OMNIDIRECTIONAL GENERATING DEVICE	2021/03/19
2021/01897	INTERMEDIATES FOR PREPARING HERBICIDAL PYRIDAZINONES	2021/03/19
2021/01924	TERMINAL APPARATUS, BASE STATION APPARATUS, AND COMMUNICATION METHOD	2021/03/23
2021/01992	BI-PREDICTION FOR VIDEO CODING	2021/03/24
2021/02054	COMBINATION OF A CAP FOR A CONTAINER AND A NECK OF THE CONTAINER	2021/03/26
2021/02108	WHITENING ORAL CARE COMPOSITION BASED ON A CROSS-LINKED PVP-H2C2 COMPLEX, A PEROXYSULFATE, A HYDROPHOBIC BASE AND SODIUM TRIPOLYPHOSPHATE	2021/03/29
2021/02115	FORMULATIONS CONTAINING DEUTERATED DOMPERIDONE	2021/03/29
2021/02159	PROCESS FOR THE PREPARATION OF A FLAVOURING	2021/03/30
2021/02224	A SYSTEM AND PROCESS FOR THE VERIFICATION OF DATA	2021/04/01
2021/02282	METHOD TO MODIFY THE SURFACE OF A MOLECULAR SIEVE WITH AN AMINOSILANE	2021/04/06
2021/02344	METHOD AND SYSTEM OF IDENTIFYING AND QUANTIFYING A PROTEIN	2021/04/09
2021/02364	COMPOSITIONS COMPRISING PYRIDINE CARBOXYLATE HERBICIDES WITH ACETOLACTATE SYNTHASE (ALS) INHIBITOR HERBICIDES	2021/04/09
2021/02388	COMPOSITIONS COMPRISING PYRIDINE CARBOXYLATE HERBICIDES WITH SYNTHETIC AUXIN HERBICIDES OR AUXIN TRANSPORT INHIBITORS	2021/04/12
2021/02501	AEROSOL PROVISION DEVICE	2021/04/15
2021/02544	LIGAND-DRUG CONJUGATE OF EXATECAN ANALOGUE, PREPARATION METHOD THEREFOR AND APPLICATION THEREOF	2021/04/16
2021/02546	METHODS FOR IDENTIFYING FREE THIOLS IN PROTEINS	2021/04/16
2021/02547	METHODS FOR CHARACTERIZING	2021/04/16

Application Number	Patent Title	Filing Date
	DISULFIDE BONDS	
2021/02549	SUBSTITUTED TOLYL AS FUNGICIDES	2021/04/16
2021/02618	COMPOSITIONS COMPRISING PYRIDINE CARBOXYLATE HERBICIDES AND 4-HYDROXYPHENYL-PYRUVATE DIOXYGENASE (HPPD) INHIBITOR HERBICIDES	2021/04/20
2021/02620	COMPOSITIONS COMPRISING PYRIDINE CARBOXYLATE HERBICIDES AND ACETYL COA CARBOXYLASE (ACCASE) INHIBITOR HERBICIDES	2021/04/20
2021/02628	2-AMINO-N-HETEROARYL-NICOTINAMIDES AS NAV1.8 INHIBITORS	2021/04/20
2021/02668	DISPERSIBLE EDGE FUNCTIONALISED GRAPHENE PLATELETS	2021/04/21
2021/02696	ANTI-B7H3 ANTIBODY-EXATECAN ANALOG CONJUGATE AND MEDICINAL USE THEREOF	2021/04/22
2021/02701	SYNERGISTIC COMPOSITIONS COMPRISING (R)-2-(2-OXOPYRROLIDIN-1-YL)BUTANAMIDE AND (S)-2-(2-OXOPYRROLIDIN-1-YL)BUTANAMIDE IN A NON-RACEMIC RATIO	2021/04/22
2021/02702	SYNERGISTIC DISINFECTANT COMPOSITIONS HAVING ENHANCED ANTIMICROBIAL EFFICACY AND STABILITY, AND METHODS OF USING THE SAME	2021/04/22
2021/02736	FLUID RETENTION COMPOUND	2021/04/23
2021/02792	METHOD FOR REFINING BIO-BASED PROPYLENE GLYCOL	2021/04/26
2021/02944	MATERIAL CONVEYOR, SYSTEM AND METHOD FOR THE MOVEMENT OF MATERIAL	2021/04/30
2021/02974	2,6-DIMETHYL-N-((PYRIDIN-4-YL)METHYL)IMIDAZO[1,2-B]PYRIDAZIN-8-AMINE AND 2,5-DIMETHYL-N-[(PYRIDIN-4-YL)METHYL]PYRAZOLO[1,5-A]PYRIMIDIN-7-AMINE DERIVATIVES FOR TREATING VIRAL INFECTIONS	2021/05/03
2021/02989	OPTICAL SECURITY ELEMENTS, MARKED OBJECT, METHOD OF AUTHENTICATING AN OBJECT AND USE OF OPTICAL SECURITY ELEMENTS FOR AUTHENTICATING OR SECURING AGAINST COUNTERFEITING	2021/05/04
2021/02995	ORAL CARE COMPOSITION COMPRISING ZINC AND AN AMINO ACID FOR TREATING SYMPTOMS OF A GASTRIC DISORDER IN THE ORAL CAVITY	2021/05/04
2021/03063	METHODS AND CULTURES TO MANUFACTURE PIZZA CHEESE	2021/05/06

Application Number	Patent Title	Filing Date
2021/03180	ORAL CARE COMPOSITION COMPRISING ZINC AND AN AMINO ACID FOR TREATING SYMPTOMS OF A GASTRIC DISORDER IN THE ORAL CAVITY	2021/05/11
2021/03181	REDUCTION OF PATHOGENIC BACTERIA USING ARGININE	2021/05/11
2021/03226	PAYLOAD DELIVERY MECHANISM SUITABLE FOR USE WITH A DRONE	2021/05/12
2021/03287	HANDHELD LASER-BASED VEHICLE SPEED MEASUREMENT DEVICE INCORPORATING AN AUTOMATIC NUMBER PLATE RECOGNITION (ANPR) FUNCTION	2021/05/14
2021/03322	METHOD FOR MATERIAL ADDITIVE MANUFACTURING OF AN INORGANIC FILTER SUPPORT FROM A HOT-MELT COMPOSITION AND RESULTING MEMBRANE	2021/05/17
2021/03326	DENTIFRICE CONTAINING SODIUM BICARBONATE AND STANNOUS FLUORIDE	2021/05/17
2021/03627	NATURAL SOLUTION LANGUAGE	2021/05/27
2021/04197	CELL SEPARATION APPARATUS AND METHODS OF USE	2021/06/18
2021/04227	RAPID BOTANICAL OIL DISTILLATION DEVICE UTILIZING MICROWAVE AGENT	2017/12/01
2021/04321	AQUEOUS PAEDIATRIC RETINOL FORMULATIONS	2021/06/23
2021/04740	BI-DIRECTIONAL VOLUME PROVING SYSTEM	2021/07/07
2021/04862	AUTOMATIC AERIAL SHIPPING SYSTEM	2021/07/12
2021/05101	PEPTIDES FOR TREATMENT AND PREVENTION OF DIABETES AND ASSOCIATED DISORDERS	2021/07/20
2021/05176	METHOD OF CHARACTERIZATION OF VISIBLE AND/OR SUB-VISIBLE PARTICLES IN BIOLOGICS	2021/07/22
2021/05236	SINGLE-DOSE PACKAGED CLOTRIMAZOLE LIQUID COMPOSITION	2021/07/23
2021/05314	SYSTEM AND METHOD FOR MANAGING CARRYBACK THRESHOLDS IN SURFACE HAULAGE	2021/07/27
2021/05582	AUTHENTICATION OF A CONTAINER AND/OR PRODUCT PACKAGED THEREIN	2021/08/06
2021/05753	CRYSTALLINE FORMS OF 1-(1,2-DIMETHYLPROPYL)-N-ETHYL-5-METHYL-N-PYRIDAZIN-4-YL-PYRAZOLE-4-CARBOXAMIDE	2021/08/04
2021/05927	APPARATUS AND METHOD FOR ENCODING A SPATIAL AUDIO REPRESENTATION OR APPARATUS AND METHOD FOR DECODING AN ENCODED AUDIO SIGNAL USING TRANSPORT	2021/08/18

Application Number	Patent Title	Filing Date
	METADATA AND RELATED COMPUTER PROGRAMS	
2021/06516	RNA-GUIDED DNA INTEGRATION USING TN7-LIKE TRANSPOSONS	2021/09/06
2021/06806	METHOD AND APPARATUS FOR REMOVING PLANTS OR OTHER MATERIAL EXISTING IN WATER	2021/09/14
2021/06809	MEDIUM CHAIN TRIGLYCERIDE FORMULATIONS WITH IMPROVED BIOAVAILIBLITY AND METHODS RELATED THERETO	2021/09/14
2021/06810	THERMAL FRACTURE AND MICROCARBON SEPARATION OF COAL PARTICLES	2021/09/14
2021/06878	REGENERATION VALVE FOR A HYDRAULIC CIRCUIT	2021/09/17
2021/06900	DUAL MODE IMPELLER ASSEMBLY AND A VENTILATION UNIT	2021/09/17
2021/06901	DATA COMMUNICATION IN THE MICROWAVE RANGE USING ELECTRICALLY CONDUCTIVE ELEMENTS IN A CONSTRUCTION MACHINE	2021/09/17
2021/06907	ELECTRIC-RESISTANCE-WELDED STEEL PIPE OR TUBE FOR HOLLOW STABILIZER AND METHOD OF MANUFACTURING SAME	2021/09/17
2021/06908	NONLINEAR ADAPTIVE LOOP FILTERING IN VIDEO PROCESSING	2021/09/17
2021/06909	A PROCESS AND A SPINNING LINE UNIT FOR WET SPINNING OF CELLULOSE FIBERS FROM AN ALKALINE SPIN BATH	2021/09/17
2021/06910	ELECTRONIC DEVICE COMPRISING WIRING MEMBER FIXING STRUCTURE	2021/09/17
2021/06911	ELECTRONIC DEVICE FOR REDUCING OCCURRENCE OF UNINTENDED USER INPUT AND OPERATION METHOD FOR THE SAME	2021/09/17
2021/06913	AIR FILTER DEVICE	2021/09/17
2021/06914	PROCESS FOR MAKING STABLE BACTERIAL EXTRACTS AND THEIR USE AS PHARMACEUTICALS	2021/09/17
2021/06977	SATELLITE FOR END-TO-END BEAMFORMING	2021/09/20
2021/06978	SATELLITE FOR END-TO-END BEAMFORMING	2021/09/20
2021/07021	BEAMFORMER FOR END-TO-END BEAMFORMING	2021/09/21
2021/07022	ACCESS NODE FOR END-TO-END BEAMFORMING	2021/09/21
2021/07043	MODIFIED UPSAMPLING FOR VIDEO CODING TECHNOLOGY	2021/09/21
2021/07046	FUNGICIDAL ARYL AMIDINES	2021/09/21
2021/07047	HETERODIMERIC ANTIBODIES THAT BIND ENPP3 AND CD3	2021/09/21

Application Number	Patent Title	Filing Date
2021/07074	PRECLEANER SYSTEM	2021/09/22
2021/07090	FACILITY AND METHOD FOR ADVANCED NITROGEN REMOVAL FROM INDUSTRIAL WASTEWATER BY ANAMMOX	2021/09/22
2021/07137	SAFETY FOR VEHICLE USERS	2021/09/23
2021/07140	APPARATUS AND METHOD RELATING TO MANAGED PRESSURE DRILLING	2021/09/23
2021/07143	EXPRESSION OF NITROGENASE POLYPEPTIDES IN PLANT CELLS	2021/09/23
2021/07193	MIMO RADAR SYSTEM FOR AN AERIAL VEHICLE	2021/09/27
2021/07233	METHOD AND APPARATUS FOR PRODUCING A DISPENSING PART OF A CONTAINER, AND DISPENSING PART OF A CONTAINER	2021/09/27
2021/07235	COMPOSITIONS AND METHODS FOR TREATING OCULAR DISEASE	2021/09/27
2021/07294	USING INTERPOLATION FILTERS FOR HISTORY BASED MOTION VECTOR PREDICTION	2021/09/28
2021/07295	PARAMETER DERIVATION IN CROSS COMPONENT MODE	2021/09/28
2021/07297	SURFACTANT SYSTEMS	2021/09/28
2021/07301	VEHICLE COMPRISING A STABILIZER, AND STABILIZER FOR SUCH A VEHICLE	2021/09/28
2021/07323	MULTI-VEHICLE BRAKING SYSTEM	2021/09/29
2021/07336	HAIR CONDITIONING COMPOSITION	2021/09/29
2021/07339	ISOTROPIC LIQUID CLEANSERS COMPRISING ACYL ISETHIONATE AND METHYL ACYL TAURATE SURFACTANT MIXTURES	2021/09/29
2021/07346	COMPOUNDS FOR USE IN THE TREATMENT OR PROPHYLAXIS OF PAIN, INFLAMMATION AND/OR AUTOIMMUNITY	2021/09/23
2021/07395	IMPROVEMENTS IN OR RELATING TO A SAMPLE MANAGEMENT MODULE	2021/09/30
2021/07396	IMPROVEMENTS IN OR RELATING TO AN OPTICAL ELEMENT	2021/09/30
2021/07398	DISPOSITION OF REAGENTS IN ASSAY DEVICE	2021/09/30
2021/07450	MOST PROBABLE MODE LIST CONSTRUCTION FOR MATRIX-BASED INTRA PREDICTION	2021/10/04
2021/07451	CHROMA CODING MODE DETERMINATION BASED ON MATRIX-BASED INTRA PREDICTION	2021/10/04
2021/07452	RESTRICTION ON APPLICABILITY OF CROSS COMPONENT MODE	2021/10/04
2021/07453	METHODS FOR CROSS COMPONENT DEPENDENCY REDUCTION	2021/10/04
2021/07454	DETERGENT COMPOSITIONS	2021/10/04
2021/07495	COOLING SYSTEM FOR COMPUTER	2021/10/05

Application Number	Patent Title	Filing Date
	COMPONENTS	
2021/07805	FLOOR PANEL AND METHOD FOR MANUFACTURING THE SAME	2021/10/08
2021/07823	4-[5-[(RAC)-1-[5-(3-CHLOROPHENYL)-3-ISOXAZOLYL]ETHOXY]-4-METHYL-4H-1,2,4-TRIAZOL-3-YL]PYRIDINE FOR USE IN PREVENTION AND/OR TREATMENT OF PAIN IN AN ANIMAL	2021/10/14
2021/07829	GOLD CONTAINING CATALYST, METHOD OF PREPARATION AND USE	2021/10/14
2021/07863	PROCESS FOR TREATING ELECTRICAL AND ELECTRONIC WASTE	2021/10/15
2021/07931	ANTI-TAU ANTIBODIES AND METHODS OF USE	2021/10/18
2021/07947	COMBINATION THERAPY FOR THE TREATMENT OF CANCER	2021/10/18
2021/07948	CONSTRAINTS ON QUANTIZED RESIDUAL DIFFERENTIAL PULSE CODE MODULATION REPRESENTATION OF CODED VIDEO	2021/10/18
2021/08006	INSURANCE MANAGEMENT SERVER, SERVICE PROVIDING SYSTEM, AND SERVICE PROVIDING METHOD	2021/10/19
2021/08007	SYSTEM FOR ONBOARD ELECTRONIC ENCODING OF THE CONTENTS AND ADMINISTRATION PARAMETERS OF IV CONTAINERS AND THE SECURE USE AND DISPOSAL THEREOF	2021/10/19
2021/08010	LAMELLAR LIQUID CLEANSERS COMPRISING ACYL ISETHIONATE AND METHYL ACYL TAURATE SURFACTANT MIXTURES	2021/10/19
2021/08101	HIGH SPEED LABELER FOR LARGE PRODUCE ITEMS	2021/10/21
2021/08105	STATIC DRYER	2021/10/21
2021/08107	COSMETIC COMPOSITIONS FOR SOFT-FOCUS	2021/10/21
2021/08158	RADIATION-RESISTANT INORGANIC MATERIAL AND FIBER THEREOF	2021/10/22
2021/08160	TENSION MECHANISM FOR BELT-TYPE TRIBOELECTRIC SEPARATOR DEVICES	2021/10/22
2021/08514	A COMPOSITE PANEL FOR STRUCTURAL AND DECORATIVE SURFACES	2021/11/02
2021/08637	MICROORGANISM FOR PRODUCING L-AMINO ACID HAVING INCREASED CYTOCHROME C ACTIVITY, AND L-AMINO ACID PRODUCTION METHOD USING SAME	2021/11/04
2021/08644	METHOD TO IRRIGATE USING HYDROGELS IN THE SOIL TO DRAW WATER FROM THE ATMOSPHERE	2021/11/04
2021/08668	CRASH ATTENUATOR WITH RELEASE PLATE HINGE ASSEMBLY, RELEASE PLATE HINGE ASSEMBLY AND METHOD	2021/11/05

Application Number	Patent Title	Filing Date
	FOR THE USE THEREOF	
2021/08670	PHARMACEUTICAL PREPARATION AND METHOD FOR PRODUCING SAME	2021/11/05
2021/08671	MOBILE LOCK	2021/11/05
2021/08699	REMOTE-CONTROLLED ELECTRIC UNLATCH DEVICE TO OPEN A TAILGATE OF PICKUP TRUCK	2021/11/08
2021/08755	POUCH HAVING TRANSPARENT WINDOW WITH ANTI-COUNTERFEITING FEATURE	2021/11/08
2021/08947	EDIBLE COATING COMPOSITION FOR COATING FRESH HARVEST PRODUCTS	2021/11/11
2021/08948	SELF-STACKING SPIRAL BELT CONVEYOR WITH SMOOTH DIAMETER REDUCTION	2021/11/11
2021/08950	OXYMETAZOLINE COMPOSITIONS AND METHODS FOR TREATING OCULAR DISORDERS	2021/11/11
2021/08963	GROUND ENGAGING TOOL MONITORING SYSTEM	2021/11/11
2021/09014	ANTENNA AND ELECTRONIC DEVICE INCLUDING THE SAME	2021/11/12
2021/09015	MONETIZATION OF ANIMAL DATA	2021/11/12
2021/09017	ANIMAL DATA PREDICTION SYSTEM	2021/11/12
2021/09020	CASTING NOZZLE	2021/11/12
2021/09022	METHOD FOR OBTAINING LOW-MOLECULAR-WEIGHT HEPARINS BY MEANS OF TANGENTIAL FLOW FILTRATION	2021/11/12
2021/09122	A PROCESS FOR THE MANUFACTURING OF (6AR,10AR)-7-PROPYL-6,6A,7,8,9,10,10A,11-OCTAHYDRO-[1,3]DIOXOLO[4',5':5,6]BENZO[1,2-G]QUINOLINE AND (4AR,10AR)-1-PROPYL-1,2,3,4,4A,5,10,10A-OCTAHYDRO-BENZO[G]QUINOLINE-6,7-DIOL	2021/11/16
2021/09124	COMPOUNDS TARGETING PROTEINS AND PHARMACEUTICAL COMPOSITIONS THEREOF, AND THEIR THERAPEUTIC APPLICATIONS	2021/11/16
2021/09179	COMPOUNDS COMPRISING N-METHYL-2-PYRIDONE, AND PHARMACEUTICALLY ACCEPTABLE SALTS	2021/11/17
2021/09192	SYSTEM FOR TEAM BALL GAME HAVING INTERACTIVE GOAL BARRIERS	2021/11/17
2021/09195	DETERGENT COMPOSITION	2021/11/17
2021/09196	SECURE PAYMENT TRANSACTIONS	2021/11/17
2021/09197	A HAIR OIL APPLICATOR	2021/11/17
2021/09255	ELECTRIC-RESISTANCE-WELDED STEEL PIPE OR TUBE FOR HOLLOW STABILIZER	2021/11/18
2021/09256	PROCESS FOR THE PREPARATION OF BATTERY PRECURSORS	2021/11/18
2021/09257	PROCESS FOR THE PREPARATION OF PRECURSOR COMPOUNDS FOR LITHIUM	2021/11/18

Application Number	Patent Title	Filing Date
	BATTERY CATHODES	
2021/09301	REDOX FLOW BATTERY SYSTEMS AND METHODS OF MANUFACTURE AND OPERATION	2021/11/19
2021/09313	SPLIT PLUMMER BLOCK BEARING HOUSING	2021/11/19
2021/09316	DETERGENT COMPOSITION	2021/11/19
2021/09358	CLEANSING COMPOSITION	2021/11/22
2021/09360	PREVENTION OF INFECTION BY HIGHLY PATHOGENIC VIRUSES USING TOPICAL APPLICATION OF POVIDONE-IODINE ON MUCOUS MEMBRANES	2021/11/22
2021/09361	DETERGENT COMPOSITION	2021/11/22
2021/09362	MASTER LINK FOR A TRACK CHAIN	2021/11/22
2021/09437	FUEL PUMP	2021/11/23
2021/09518	IMIDAZOPYRIMIDINES AS EED INHIBITORS AND THE USE THEREOF	2021/11/24
2021/09577	RECYCLING PROCESS	2021/11/25
2021/09591	AN ELECTRODE ASSEMBLY FOR ELECTROCHEMICAL PROCESSES	2021/11/25
2021/09593	DETERGENT COMPOSITION	2021/11/25
2021/09594	DEVICE FOR MANIPULATING PREFERABLY A CASTING TUBE IN A CHANGING DEVICE AT THE SPOUT OF A METALLURGICAL VESSEL	2021/11/25
2021/09597	METHOD FOR STABILIZING THE PH OF AN AQUEOUS COMPOSITION COMPRISING A DRUG	2021/11/25
2021/09642	A FUEL CONTAINER	2021/11/26
2021/09643	SHIELDING STRUCTURES IN PLASMA ENVIRONMENT	2021/11/26
2021/09645	STABILIZATION OF RESORCINOL COMPOUNDS IN COSMETIC COMPOSITIONS	2021/11/26
2021/09794	VAPOR PHASE METHANOL CARBONYLATION CATALYST	2021/11/30
2021/09831	BIOENERGETIC COMBINATIONS AND METHODS OF USING SAME	2021/12/01
2021/09833	METHOD FOR EXTRACTING HEMICELLULOSE FROM LIGNOCELLULOSIC MATERIAL	2021/12/01
2021/09853	METHOD FOR PRODUCING PEPTIDES OR PROTEINS OR PEPTIDOMIMETICS	2021/12/01
2021/09855	AUTOMATIC BRAKE APPLICATION FOR EMERGENCY STOP	2021/12/01
2021/09899	RADIATION OR ANTICANCER CHEMOTHERAPY SENSITIZER ADMINISTRATION HOLDER	2021/12/02
2021/09900	AN AIRPORT STAND ARRANGEMENT AND METHOD	2021/12/02
2021/09970	AQUEOUS COATING COMPOSITION	2021/12/03
2021/09974	METHOD AND DEVICE FOR RESETTING AN	2021/12/03

Application Number	Patent Title	Filing Date
	INERTIAL UNIT OF A TRANSPORT MEANS ON THE BASIS OF INFORMATION DELIVERED BY A VIEWFINDER OF THE TRANSPORT MEANS	
2021/10226	METHOD FOR VARNISHING SUBSTRATES, AND VARNISHED SUBSTRATES	2021/12/09
2021/10258	METHODS AND SYSTEMS FOR CRYOPRESERVATION AND RESUSPENSION OF BODY FLUIDS	2021/12/10
2021/10261	CROP INPUT APPLICATION SYSTEMS, METHODS, AND APPARATUS	2021/12/10
2021/10284	ELECTRONIC DEVICE AND METHOD OF UTILIZING STORAGE SPACE THEREOF	2021/12/10
2021/10285	ANTIBODIES AND METHODS OF USE	2021/12/10
2021/10288	SYSTEM FOR PROVIDING BIRTH CONTROL	2021/12/10
2021/10356	STABILIZED MUTANTS OF QUORUM QUENCHING LACTONASE AND USE THEREOF IN TREATMENT OF PATHOGENS	2021/12/13
2021/10421	FILTER ELEMENT HAVING POTTED GASKET END CAP ASSEMBLY	2021/12/14
2021/10435	DEVICE FOR PIVOTABLY CONNECTING AN AIR-GUIDING ELEMENT TO A VEHICLE	2021/12/14
2021/10437	COMPOSITIONS AND METHODS OF MANUFACTURING TRIVALENT FILOVIRUS VACCINES	2021/12/14
2021/10498	ELECTRONIC DEVICE FOR REDUCING POWER CONSUMPTION AND OPERATING METHOD THEREOF	2021/12/15
2021/10554	METHODS OF TREATING CANCER USING PD-1 AXIS BINDING ANTAGONISTS AND TIGIT INHIBITORS	2021/12/17
2021/10580	COATING THICKNESS OPTIMIZATION AND PROGRAMMING METHOD FOR A COATING SYSTEM AND CORRESPONDING COATING SYSTEM	2021/12/17
2021/10581	THREE-DIMENSIONAL PUZZLE	2021/12/17
2021/10584	WEIGH-IN-MOTION SYSTEM WITH CHANNEL DATA	2021/12/17
2021/10586	SLIDE CLOSURE FOR VESSEL CONTAINING MOLTEN METAL	2021/12/17
2021/10681	BIOPSY CARRIER	2021/12/20
2021/10682	METHOD FOR PRODUCING A CARBONATE BONDED, COMPACTED ARTICLE	2021/12/20
2021/10683	TOPICAL COMPOSITIONS AND METHODS OF USING SAME AGAINST MITOCHONDRIAL FRAGMENTATION	2021/12/20
2021/10692	COMPOUNDS AND METHODS OF USE THEREOF AS ANTIBACTERIAL AGENTS	2021/12/20
2021/10741	STATIC AND RUNTIME ANALYSIS OF COMPUTER PROGRAM SYSTEMS	2021/12/21
2021/10743	INFRASTRUCTURAL LINES AND CONTROL	2021/12/21

Application Number	Patent Title	Filing Date
	AND/OR COMMUNICATION NETWORKS ASSOCIATED THEREWITH	
2021/10791	CONTAINER WITH HINGED LID	2021/12/22
2021/10797	INTERVERTEBRAL FUSION CAGE	2021/12/22
2021/10800	DETERGENT COMPOSITION	2021/12/22
2021/10893	CONTROL SYSTEM FOR VEHICLE	2021/12/23
2021/10898	METHYLOBACTERIUM SP. VOV. STRAIN, COMPOSITIONS COMPRISING IT, AND ITS USE AS BIO-STIMULANT AND ENDOPHYTE NITROGEN-FIXING BACTERIUM	2021/12/23
2022/01017	BATTERY COMMUNICATION AND CONTROL SYSTEMS AND METHODS	2022/01/21
2022/01070	FOCAL TREATMENT OF PROSTATE CANCER	2022/01/24
2022/01318	STAGED INFORMATION EXCHANGE FACILITATED BY CONTENT-ADDRESSABLE RECORDS INDEXED TO PSEUDONYMOUS IDENTIFIERS BY A TAMPER-EVIDENT DATA STRUCTURE	2022/01/27
2022/01445	OLFACTORY DELIVERY OF THERAPEUTIC COMPOUNDS TO THE CENTRAL NERVOUS SYSTEM	2022/02/01
2022/01468	METHOD	2022/02/01
2022/01526	DRINKABLE SUPPLEMENT COMPOSITION FOR IMPROVED HEALTH AND HYDRATION	2022/02/03
2022/01616	A CONTAINER AND A METHOD OF MANUFACTURING A CONTAINER	2022/02/07
2022/01828	THERAPEUTIC FUSION PROTEINS	2022/02/11
2022/01988	ANTIBODY-STING AGONIST CONJUGATES AND THEIR USE IN IMMUNOTHERAPY	2022/02/16
2022/02096	VENTILATION DEVICE	2022/02/18
2022/02324	MONORAIL SYSTEM AND RELATED SCAFFOLD STRUCTURES, SYSTEMS AND METHODS OF USE	2022/02/23
2022/02507	NITRIFICATION INHIBITORS	2022/02/28
2022/02600	MULTIVALENT PNEUMOCOCCAL POLYSACCHARIDE-PROTEIN CONJUGATE COMPOSITION	2022/03/03
2022/02745	SAFELY TESTING OR PROGRAMMING DETONATORS IN AN ELECTRONIC BLASTING SYSTEM	2022/03/07
2022/02746	SECURE ARMING AND FIRING IN AN ELECTRONIC BLASTING SYSTEM	2022/03/07
2022/02747	SECURE COMMUNICATION BETWEEN DEVICES IN A BLASTING SYSTEM	2022/03/07
2022/02863	COMPOUNDS SUITABLE FOR THE TREATMENT AND PROPHYLAXIS OF MUSCLE WASTING AND OTHER CONDITIONS	2022/03/09
2022/03000	IMAGE ENCODING/DECODING METHOD AND DEVICE	2022/02/28
2022/03161	MEAT ANALOGUE PRODUCT COMPRISING	2022/03/16

Application Number	Patent Title	Filing Date
	HYDRATED TEXTURED PLANT PROTEIN	
2022/03367	TREATMENT OF MENSTRUAL CYCLE-INDUCED SYMPTOMS	2022/03/22
2022/03464	SYSTEM AND METHOD FOR IMPROVING TREATMENT OF A CHRONIC DISEASE OF A PATIENT	2022/03/24
2022/03515	SUBSTITUTED PYRIDOPYRIMIDINONYL COMPOUNDS USEFUL AS T CELL ACTIVATORS	2022/03/25
2022/03596	APPARATUSES, METHODS, AND SYSTEMS FOR VIBRATORY SCREENING	2022/03/29
2022/03879	A CATHETER DEVICE COMPRISING A LEVERING MEMBER	2022/04/05
2022/03976	TWO-STAGE MICROCHIP DRUG DELIVERY DEVICE AND METHODS	2022/04/07
2022/03984	PREAMBLE AND PHYSICAL UPLINK SHARED CHANNEL RESOURCE ORDERING AND SCRAMBLING IDENTIFIER GENERATION FOR TWO-STEP RANDOM ACCESS CHANNEL PROCEDURE	2022/04/07
2022/03987	OFF-HIGHWAY VEHICLE INCLUDING FRAME COUPLED GAS SPRING WHEEL ASSEMBLIES	2022/04/07
2022/04091	BEVERAGE CONTAINER FOR FORMING A HEAD ON A POURED BEVERAGE	2022/04/11
2022/04144	PARTIALLY COLLAPSIBLE GLAMPING AND LIVING UNIT	2022/04/12
2022/04157	USE OF ACYLCYANAMIDES OR SALTS THEREOF FOR REGULATING PLANT GROWTH	2022/04/12
2022/04210	POSITIONING APPARATUS, ROCK DRILLING RIG AND METHOD FOR POSITIONING	2022/04/13
2022/04446	METHODS OF TREATING CHRONIC LYMPHOCYTIC LEUKEMIA USING 2-(2,6-DIOXOPIPERIDIN-3YL)-4-((2-FLUORO-4-((3-MORPHOLINOAZETIDIN-1-YL)METHYL)BENZYL)AMINO)ISOINDOLINE-1. 3-DIONE	2022/04/20
2022/04731	PLMN SELECTION BASED ON THE GEO-LOCALISATION OF A USER EQUIPMENT	2022/04/28
2022/04744	FLUORINATED PHENYLACETIC ACID DERIVATIVES IN A WEED CONTROL METHOD	2022/04/28
2022/04815	ROCK BOLT ASSEMBLY COMPRISING A SENSOR ASSEMBLY	2022/04/29
2022/04855	A UNIQUE METHOD OF HARNESSING ENERGY FROM THE MAGNETIC DOMAINS FOUND IN FERROMAGNETIC AND PARAMAGNETIC MATERIALS	2022/05/03
2022/04896	COMPOSITIONS AND METHODS FOR DELIVERING CANNABINOIDS TO SKIN	2022/05/04

Application Number	Patent Title	Filing Date
2022/04904	CRYPTOSPORIDIOSIS VACCINE	2022/05/04
2022/04906	STRUCTURE FOR MARINE VESSEL	2022/05/04
2022/05087	ELECTRONIC SELF-DESTRUCTING FUSE STRUCTURE	2022/05/09
2022/05088	RESERVE BATTERY WITH FAST VOLTAGE RISE TIME	2022/05/09
2022/05142	CANNABINOID RECEPTOR MODULATORS	2022/05/10
2022/05234	SYSTEMS AND METHODS FOR SIGNALING STARTING SYMBOLS IN MULTIPLE PDSCH TRANSMISSION OCCASIONS	2022/05/11
2022/05432	SAFE TEST ARRANGEMENT	2022/05/17
2022/05547	A SYSTEM FOR GUIDING A DIELECTRIC CABLE FROM PHASE-TO-GROUND POTENTIAL	2022/05/19
2022/05726	A FEMALE CONDOM	2022/05/24
2022/05756	ORAL FORMULATION OF X842	2022/05/16
2022/05813	TRPV1 EPITOPES AND ANTIBODIES	2022/05/25
2022/05944	MAPPING SYSTEM FOR VARIABLE-RATE ROW-BY-ROW APPLICATION OF INPUTS	2022/05/27
2022/06106	METHOD AND APPARATUS FOR RANDOM ACCESS	2022/06/01
2022/06308	EZETIMIBE AND CURCUMIN FOR USE IN CANCER TREATMENT	2022/06/07
2022/06437	CLAUDIN18.2 BINDING MOIETIES AND USES THEREOF	2022/06/09
2022/06438	SINGLE DOMAIN ANTIBODIES AND CHIMERIC ANTIGEN RECEPTORS TARGETING BCMA AND METHODS OF USE THEREOF	2022/06/09
2022/06481	AMIDE DERIVATIVE AND PREPARATION METHOD THEREFORE AND USE THEREOF IN MEDICINE	2022/06/10
2022/06754	ORAL DELIVERY SYSTEMS BASED ON IN SITU FORMING PROTEIN/POLYSACCHARIDE COACERVATES	2022/06/17
2022/06886	EXTENDED SATELLITE TELECOMMUNICATION SYSTEM AND VIRTUAL HUB MODULE THEREOF	2022/06/21
2022/07119	MULTIMODAL POLYALKYLENE TEREPHTHALATE	2022/06/27
2022/07155	WASTE BIN AND METHOD OF SERVICING THE SAME	2022/06/28
2022/07266	METHOD AND SYSTEM FOR DETERMINING AND CONTROLLING THE SEPARATION DISTANCE BETWEEN A WORKING HEAD OF A LASER PROCESSING MACHINE AND THE SURFACE OF AN OBJECT BEING PROCESSED BY MEANS OF LOW COHERENCE OPTICAL INTERFEROMETRY TECHNIQUES	2022/06/29
2022/07530	USE OF PHENOXYPROPYLAMINE	2022/07/07

Application Number	Patent Title	Filing Date
	COMPOUNDS TO TREAT DEPRESSION	
2022/07790	PHARMACEUTICAL COMPOSITION AND USE THEREOF	2022/07/13
2022/07897	ALIGNMENT MECHANISM	2022/07/15
2022/08085	THERAPEUTIC USE OF LONG-ACTING CONJUGATE OF TRIPLE AGONIST HAVING ACTIVITY WITH RESPECT TO ALL OF GLUCAGON AND GLP-1 AND GIP RECEPTORS AGAINST LUNG DISEASE	2022/07/20
2022/08109	OPHTHALMIC COMPOSITION FOR THE TREATMENT OF DRY EYE DISEASE	2022/07/20
2022/08222	ANTI-ACVR1 ANTIBODIES AND USES THEREOF	2022/07/22
2022/08849	SENSOR-ENABLED SYSTEM AND METHOD FOR MONITORING THE HEALTH, CONDITION, AND/OR STATUS OF INFRASTRUCTURE	2022/08/08
2022/09069	ANTIBODIES AND CHIMERIC ANTIGEN RECEPTORS TARGETING GLYPICAN-3 (GPC3) AND METHODS OF USE THEREOF	2022/08/12
2022/09615	METHOD AND INSTALLATION FOR PRODUCING ALUMINUM CAN SHEET	2022/08/29
2022/10139	IMAGE ENCODING/DECODING METHOD AND DEVICE	2022/09/13
2022/10140	METHOD AND APPARATUS FOR ENCODING/DECODING IMAGE	2022/09/13
2022/10936	COLD ROLLED AND ANNEALED STEEL SHEET AND METHOD OF MANUFACTURING THE SAME	2022/10/05
2022/11287	ECCENTRIC VIBRATOR SYSTEMS AND METHODS	2022/10/14
2022/11451	PROCESS AND APPARATUS FOR SIZED NUTRIENT RECOVERY FROM WASTEWATER BY ELUTRIATION	2022/10/19
2022/11667	MULTISPECIFIC HEAVY CHAIN ANTIBODIES WITH MODIFIED HEAVY CHAIN CONSTANT REGIONS	2022/10/26
2022/11850	LOOM WITH MOVABLE GUIDE BEAMS	2022/10/31
2022/12248	PHARMACEUTICAL COMPOSITIONS COMPRISING FLUBENDAZOLE	2022/11/09
2022/12644	USE OF POLYAMINES, TYRAMINE AND/OR A PLANT EXTRACT CONTAINING SAME TO STABILISE MICROORGANISMS	2022/11/21
2022/12966	METHOD AND SYSTEM FOR APPLYING A LAYER OF SOUNDABSORBING MATERIAL TO THE SURFACE OF AN INNER CAVITY OF A PNEUMATIC TYRE	2022/11/29
2022/13324	A CONNECTOR ASSEMBLY FOR A DRILLING APPARATUS	2022/12/08
2022/13425	DENTAL IMPLANTOLOGY USING SPHERICAL COMPONENTS	2022/12/12
2022/13486	NATURAL ANTIBACTERIAL AND ANTIVIRAL	2022/12/13

Application Number	Patent Title	Filing Date
	BIOLOGICAL COMPOSITIONS, COMPOUNDS, METHOD FOR OBTAINING SAME, AND USE THEREOF	
2022/13562	SUBSTITUTED PIPERIDINE COMPOUNDS AND THEIR USE	2022/12/14
2022/13609	DEVICE FOR SORTING INSECTS FOR SORTING A MIXTURE COMPRISING NYMPHS	2022/12/15
2022/13851	MODIFIED VINYL SILANE AS WELL AS PREPARATION METHOD AND APPLICATION THEREOF	2022/12/21
2022/13859	AUDIO DECODER, AUDIO ENCODER, AND RELATED METHODS USING JOINT CODING OF SCALE PARAMETERS FOR CHANNELS OF A MULTI-CHANNEL AUDIO SIGNAL	2022/12/21
2022/13871	METHOD FOR UNLOCKING VEHICLE DOOR USING MOBILE TERMINAL	2022/12/21
2022/13890	COMPOSITIONS AND METHODS FOR TREATING PSYCHIATRIC DISORDERS OR SYMPTOMS THEREOF	2022/12/21
2022/13893	SYSTEM AND METHOD FOR THE SELECTIVE EXTRACTION OF VISCOUS HYDROCARBONS FROM TANKS AND OTHER CONTAINERS	2022/12/21
2022/13922	DETECTION METHOD FOR COBALT CONTENT IN A BATTERY ELECTRODE	2022/12/22
2022/13923	A METHOD OF MODIFYING THE SURFACE OF A METALLIC ZINC NEGATIVE ELECTRODE WITH A COMPOSITE CLADDING LAYER	2022/12/22
2022/13951	VALIDATION OF DECONTAMINATION PROCEDURES FOR A MEDICAL DEVICE	2022/12/22
2022/13959	VALIDATION OF PROCEDURES IN A DECONTAMINATION PROCESS	2022/12/22
2023/00131	LIPID NANOPARTICLES	2023/01/03
2023/00147	CUSTOMIZATION OF IMPLANT	2023/01/03
2023/00164	MODIFIED ALPHAVIRUS FOR USE AS COVID-19 VACCINE	2023/01/03
2023/00203	A REMOTE CONTROL SYSTEM	2023/01/03
2023/00206	BASE TROUGH FOR A THERMAL MODULE, THERMAL MODULE COMPRISING SUCH BASE TROUGH, A SYSTEM FOR EXTRACTING THERMAL ENERGY AND THE USE OF SUCH BASE TROUGH FOR EXTRACTING THERMAL ENERGY FROM SUNLIGHT	2023/01/04
2023/00300	MIGRATION OF USER EQUIPMENT IN AN INTEGRATED ACCESS AND BACKHAUL NETWORK	2023/01/06
2023/00302	AN ANTI-CLOGGING URBAN UNDERGROUND DRAINAGE PUMP	2023/01/06
2023/00349	AERIAL SPRAY RAINMAKING DEVICE	2023/01/09

Application Number	Patent Title	Filing Date
2023/00350	FLUID DYNAMIC RAIN-MAKING APPARATUS	2023/01/09
2023/00351	MOBILE HYDROGEN-OXYGEN BURNER RAINMAKING DEVICE	2023/01/09
2023/00436	ANTI-STATIC COATING EQUIPMENT FOR PVC PLATES	2023/01/10
2023/00469	RAILROAD FREIGHT CAR DRAFT GEAR FRICTION MODIFYING INSERT	2023/01/11
2023/00494	METHOD FOR PREPARING AMINO ACID GRANULE FROM FERMENTATION BROTH	2023/01/11
2023/00661	COAL-WATER SLURRY CONCENTRATION DEVICE	2023/01/16
2023/00663	PLC-CONTROLLED EMULSIFICATION DEVICE FOR EMULSIFIED EXPLOSIVE TEST AND ITS WORKING METHOD	2023/01/16
2023/00676	A MEDIA PLAYER	2023/01/16
2023/00779	HETEROCYCLIC COMPOUND AND USE THEREOF	2023/01/17
2023/00838	FORMULATIONS	2023/01/18
2023/00854	INSULATING UNIT, DOOR, SIDEWALL AND CHILLER OR FREEZER DEVICE	2023/01/19
2023/00963	ARTHROPOD AND MOLLUSC ARRANGEMENT	2023/01/23
2023/00988	PLANT INJECTION APPARATUS AND METHOD	2023/01/23
2023/01009	DOSING REGIMEN FOR TREATMENT OF COGNITIVE AND MOTOR IMPAIRMENTS WITH BLOOD PLASMA AND BLOOD PLASMA PRODUCTS	2023/01/24
2023/01083	DEVICES, SYSTEMS, AND METHODS FOR REAL-TIME PEELING	2023/01/25
2023/01098	PATCHINDEX SYSTEM AND METHOD FOR UPDATABLE MATERIALIZATION OF APPROXIMATE CONSTRAINTS	2023/01/25
2023/01155	SPECTRALLY SELECTIVE SOLAR ABSORBER COATING	2023/01/27
2023/01217	ANTIVIRAL PHARMACEUTICAL COMPOSITION COMPRISING AT LEAST ONE SULPHATE POLYSACCHARIDE	2023/01/30
2023/01312	METHOD FOR THE FERMENTATIVE PRODUCTION OF GUANIDINOACETIC ACID	2023/02/01
2023/01314	METHOD FOR THE FERMENTATIVE PRODUCTION OF GUANIDINOACETIC ACID	2023/02/01
2023/01321	SYSTEM FOR ELECTROPHYSIOLOGICAL ANALYSIS OF PLANTS	2023/02/01
2023/01326	CARBON-ENCAPSULATED MYCOLIC ACID ANTIGENS AS SIMPLE AND LOW-COST ELECTROCHEMICAL IMMUNOSENSORS FOR ACTIVE TUBERCULOSIS	2023/02/01
2023/01348	DAMPING ELEMENT FOR EXCAVATOR BUCKETS	2023/02/02
2023/01349	MODIFIED BUCKET	2023/02/02

Application Number	Patent Title	Filing Date
2023/01359	UE, NETWORKS NODES, AND METHODS PERFORMED THEREBY, FOR HANDLING RACH-REPORTS	2023/02/02
2023/01362	SYSTEMS AND METHODS FOR PUCCH REPETITION	2023/02/02
2023/01369	PCSK9 INHIBITORS AND METHODS OF TREATMENT USING SAME	2023/02/02
2023/01407	FRUIT CLAMPING TOOL, IN PARTICULAR FOR CLAMPING PEACHES, MACHINE AND METHOD FOR PITTING FRUIT WITH SUCH A TOOL	2023/02/03
2023/01414	A FIREARM MONITORING DEVICE	2023/02/03
2023/01444	GENERATING NOISY COPIES OF TRAINING DATA IN A METHOD FOR DETECTING ANOMALIES	2023/02/03
2023/01504	EDIBLE COATINGS FOR MAINTAINING FRUIT QUALITY	2023/02/06
2023/01576	NANO-COMPOSITE POLYMER SEPARATOR WITH ENHANCED SAFETY PERFORMANCE AND PREPARATION METHOD THEREOF	2023/02/08
2023/01681	PROBING CONFIGURATION	2023/02/10
2023/01685	WALL ASSEMBLY FOR CATALYTIC BEDS OF SYNTHESIS REACTORS	2023/02/10
2023/01687	LID FOR CONTAINERS OF SUBSTANCES, AND CONTAINER OF SUBSTANCES COMPRISING SAID LID	2023/02/10
2023/01691	SEPARATOR FOR A GRAPE COLLECTION UNIT	2023/02/10
2023/01697	ROTARY IMAGING SYSTEM, PLANT IMAGER, ANIMAL IMAGER, AND ANIMAL AND PLANT IMAGER	2023/02/10
2023/01730	Accessory for a motorcycle	2023/02/13
2023/01863	SYSTEM AND METHODS OF A VERTICAL ROD BAFFLE HEAT EXCHANGER	2023/02/15
2023/01906	A DEVICE FOR ADJUSTING AND ORIENTATING A SPRINKLER OUTLET	2023/02/16
2023/01932	BANK NOTE STORAGE CONTAINER AND BANK NOTE ORIENTATION METHOD	2023/02/16
2023/02083	COMPOSITION CONTAINING ARYLAMIDE DERIVATIVE	2023/02/20
2023/02145	LEASH CONNECTOR	2023/02/21
2023/02150	IDENTIFICATION OF AGRICULTURALLY BENEFICIAL MICROBIAL COMPOSITIONS AND USES THEREOF	2023/02/21
2023/02154	METHODS AND COMPOSITIONS FOR GENETIC MODULATION OF TUMOR MICROENVIRONMENTS	2023/02/21
2023/02517	A NATURAL VEGETABLE SOURCE BASED HAIR COLOUR	2023/02/24
2023/02529	COOLING TOWER FAN CYLINDER	2023/02/24
2023/02873	METHOD OF PRESERVING A REACTIVE	2023/02/27

Application Number	Patent Title	Filing Date
	ACTIVE COMPOUND, CAPSULE AND FORMULATION.	
2023/02877	CAUSAL NETWORK ANALYSIS METHOD FOR HIGH DIMENSIONAL SMALL SAMPLE TIME SERIES	2023/02/27
2023/03228	HANDHELD LASER SYSTEM	2023/03/01
2023/03235	STEAM GENERATOR	2023/03/01
2023/03240	BETTING MARKETS	2023/03/01
2023/03249	PAINT ROLLER ASSEMBLY	2023/03/01
2023/03264	COLLECTING DEVICE AND SAMPLING METHOD FOR GREENHOUSE GASES IN AERATION TANK OF SEWAGE PLANT	2023/03/02
2023/03267	COMPOSITIONS AND METHODS FOR SCREENING BIOLOGICAL SAMPLES	2023/03/02
2023/03344	TONER CARTRIDGE, METHOD FOR DETECTING RAMAINING TONER AMOUNT, AND IMAGE-FORMING APPARATUS	2023/03/06
2023/03377	SUB-SURFACE SOIL IRRIGATION	2023/03/07
2023/03379	AIR-SOLUTION REGENERATION DEVICE	2023/03/07
2023/03386	STAND-ALONE DECISION-MAKING TRAFFIC LIGHTS	2023/03/07
2023/03387	DURABILITY TEST DEVICE FOR TRANSVERSE MOVING ASSEMBLY OF AUTOMOBILE ELECTRIC SEAT	2023/03/07
2023/03426	AN ARTICLE HANDLING SYSTEM	2023/03/08
2023/03437	MOUNTING SYSTEM FOR A PHOTOVOLTAIC MODULE	2023/03/09
2023/03439	MAGNETIC ZINC COPPER FERRITE CATALYST FOR ACTIVATING PERSULFATE AND PREPARATION METHOD THEREOF	2023/03/09
2023/03462	TEA LEAF PROCESSING METHOD FOR INCREASING CONTENT OF TEA POLYPHENOLS AND BREWING WITH WARM WATER AND TEA LEAF	2023/03/10
2023/03480	METHOD AND SYSTEM FOR POSITIONING OPTIC DISC IN FUNDUS IMAGE	2023/03/10
2023/03509	BASE STATION COMPRISING A MAST	2023/03/13
2023/03511	GRANULAR CHINESE CHESTNUT STUFFING AND PROCESSING METHOD THEREFOR	2023/03/13
2023/03556	PRECISE CUTTING METHOD FOR ENERGY OUTBURST UNIT OF THICK COAL BELT IN COAL MINE TECTONIC AREA	2023/03/14
2023/03564	INTEGRATED KAMADO-STYLE GRILL AND SMOKER	2023/03/14
2023/03592	PROCESS FOR PREPARING COLD FUSION CONCRETE AND CEMENT COMPOSITIONS FROM METAL MINING AND PRODUCTION WASTE	2023/03/15
2023/03601	ADENOVIRUS VECTORS AND METHODS FOR USING ADENOVIRUS VECTORS	2023/03/15
2023/03639	IMPROVED ANTI-OXMIF ANTIBODIES WITH	2023/03/16

Application Number	Patent Title	Filing Date
	REDUCED AGGREGATION POTENTIAL AND REDUCED HYDROPHOBICITY	
2023/03760	DEVICE FOR INHIBITING TIN INCLUSIONS FROM BLOCKING MOLD WATER PORT OF HIGH TITANIUM STEEL SLAB AND METHOD THEREOF	2023/03/23
2023/03789	A METHOD FOR DYNAMICALLY CONSTRUCTING AND UPDATING A MODEL OF 3D TOPOGRAPHY OF A STOCK-PILE OF GRANULAR MATERIAL	2023/03/22
2023/03812	SOIL IMPROVEMENT MATERIAL AND ITS PREPARATION METHOD AND APPLICATION	2023/03/24
2023/03847	RISK ASSESSMENT AND MANAGEMENT SYSTEM OF PERSONS AND ASSETS	2023/03/27
2023/03859	BOLTER	2023/03/27
2023/03902	DETONATOR ASSEMBLY	2023/03/28
2023/03932	CULTIVATION METHOD OF GRAFTING SEEDLINGS OF CITRUS RETICULATA BLANCO HYBRID SEEDS	2023/03/29
2023/03946	SINGLE-STAGE CARBON DIOXIDE MULTI-SPLIT COOLING AND HEATING MULTIFUNCTIONAL CENTRAL AIR CONDITIONER	2023/03/29
2023/03988	FUEL SUPPLY LOCATION SYSTEM	2023/03/30
2023/04011	BLASTING SYSTEM	2023/03/30
2023/04013	DRIVING MANAGEMENT DEVICE, ON-BOARD UNIT, AND DRIVING MANAGEMENT SYSTEM	2023/03/30
2023/04037	PERFORMANCE TEST SYSTEM AND EVALUATION METHOD OF SUBWAY TRACTION MOTOR	2023/03/31
2023/04059	APPARATUS, METHOD, OR COMPUTER PROGRAM FOR PROCESSING AN ENCODED AUDIO SCENE USING A PARAMETER CONVERSION	2023/03/31
2023/04089	LUPEOL COUPLED TRIPHENYLPHOSPHINE DERIVATIVE AND ITS PREPARATION AND APPLICATION	2023/04/03
2023/04090	APPLICATION OF BMP4 AS TARGET IN PREPARING DRUG FOR TREATING DIABETIC CARDIOMYOPATHY	2023/04/03
2023/04091	MEASURING INSTRUMENT AND METHOD FOR THERMAL CONDUCTIVITY OF ICE	2023/04/03
2023/04119	SMART HOME MANAGEMENT SYSTEM BASED ON INTERNET OF THINGS	2023/04/04
2023/04120	AUTOMATIC DISTILLATION HEAD FOR DISTILLATION	2023/04/04
2023/04122	PARAMETRIC FAULT DIAGNOSIS METHOD FOR MULTI-LEVEL INVERTER BASED ON BOND GRAPH MODELING	2023/04/04
2023/04123	FREQUENCY-ADJUSTABLE ACOUSTO-	2023/04/04

Application Number	Patent Title	Filing Date
	OPTIC ELECTROMAGNETIC STIMULATION DEVICE FOR ANIMAL EXPERIMENTS	
2023/04141	RETAINING WALL STRUCTURE USING CORRUGATED PLATES AND CONSTRUCTION METHOD THEREFOR	2023/04/04
2023/04152	CAP ASSEMBLY FOR A BEVERAGE CONTAINER	2023/04/04
2023/04162	CATALYST MIXING DEVICE	2023/04/05
2023/04166	METHOD FOR PREPARING ETHYLENE PROPYLENE	2023/04/05
2023/04167	ANTI-CD47 ANTIBODIES AND METHODS OF USE	2023/04/05
2023/04197	PREPARATION METHOD OF SELF-CLEANING SUPER-HYDROPHOBIC PULP MOLDING MATERIAL	2023/04/06
2023/04198	EXPRESSION AND APPLICATION OF FEMALE-SPECIFIC PROTEIN OF CYNOGLOSSUS SEMILAEVIS	2023/04/06
2023/04202	METHOD AND SYSTEM FOR PARTITIONING LESION IMAGING DATA	2023/04/06
2023/04204	DRAINAGE ANTI-PRESSURE ANTI-FLOATING METHOD AND SYSTEM FOR AIRPORT UNDERGROUND SPACE	2023/04/06
2023/04205	MOF-DERIVED HIGH-POROSITY CARBON AEROGELS AND APPLICATION IN SUPERCAPACITORS	2023/04/06
2023/04206	PEDIATRIC NEGATIVE PRESSURE GASTRIC LAVAGE DEVICE FOR PEDIATRICIANS	2023/04/06
2023/04244	GYRATORY ROLLER CRUSHER	2023/04/06
2023/04265	TREATMENT METHOD AND TREATMENT DEVICE FOR REMEDIATING CONTAMINATED SOIL BY PYROLYSIS AND CARBONIZATION OF BIOMASS	2023/04/11
2023/04266	SOIL DETECTION DEVICE FOR GENERAL SURVEY OF DROUGHT DISASTERS	2023/04/11
2023/04267	AN ADAPTIVE CONTROL DEVICE FOR LIFTING A BRIDGE-SUBGRADE APPROACH SLAB	2023/04/11
2023/04268	A CONVENIENT OPERATE INVERSE ROTATING STRAIGHT SLOT WHEEL FERTILIZER APPARATUS	2023/04/11
2023/04269	BIOLOGICAL FERTILIZER FOR VEGETABLES AND PREPARATION METHOD THEREOF	2023/04/11
2023/04270	HYDROPONIC VEGETABLE PLAN DEVICE AND PLANTING METHOD THEREOF	2023/04/11
2023/04275	A SIMULATED TUNNEL AND CONCRETE JET PRESSURE TEST DEVICE	2023/04/11
2023/04277	BEMISIA TABACI REPELLENT AND PREPARATION METHOD THEREFOR	2023/04/11
2023/04278	SIMULATED COMPUTED TOMOGRAPHY	2023/04/11

Application Number	Patent Title	Filing Date
	EQUIPMENT FOR MEDICAL IMAGING TRAINING	
2023/04280	DEVICE FOR CEREBRAL PALSY REHABILITATION	2023/04/11
2023/04281	PRODUCTION AND MANAGEMENT METHOD FOR “RED BEAUTY” ORANGES GOING ON SALE EARLY	2023/04/11
2023/04283	PREPARATION METHOD OF SELF-CLEANING GLASS COATING	2023/04/11
2023/04284	METHOD FOR PREPARING HIGH-STRENGTH CERAMSITE FROM COAL GANGUE, FLY ASH AND STEEL SLAG	2023/04/11
2023/04285	ZDY4200LS CRAWLER-TYPE ALL-HYDRAULIC TUNNEL DRILLING RIG FOR COAL MINES	2023/04/11
2023/04286	METHOD FOR THE POPULARIZATION MODE OF HEAVY METAL POLLUTION PREVENTION AND CONTROL TECHNOLOGY INTEGRATION APPLIED IN COPPER DRESSING AND SMELTING SLAG DISPOSAL SITE AND AFFECTED AREAS	2023/04/11
2023/04320	BOX-TYPE SELF-RETAINING LARYNGOSCOPIC SURGERY SIMULATING TRAINER	2023/04/12
2023/04330	NOVEL SAFETY SPRING MOUNTING CLIP	2023/04/11
2023/04412	MIL-101(FE) FOR ADSORBING NITRATE IN WATER, PREPARATION METHOD THEREFOR AND APPLICATION THEREOF	2023/04/14
2023/04438	ALLOY POWDER, PREPARATION METHOD THEREFOR, AND USE THEREOF	2023/04/14
2023/04473	A SELF-MAINTENANCE BEARING FOR ELECTRIC VEHICLE ASYNCHRONOUS MOTOR	2023/04/17
2023/04518	BOLTLESS FASTENER SYSTEM FOR HEAVY-HAUL RAILWAYS	2023/04/18
2023/04578	THE INVENTION RELATES TO AN EXTRACTION METHOD OF EUCOMMIA ULMODIES LEAF FLAVONOIDS AND ITS APPLICATION IN ACUTE LIVER INJURY	2023/04/20
2023/04579	FULL-HYDRAULIC FORMWORK DEVICE FOR SHAFT WALLING	2023/04/20
2023/04633	METHOD FOR PREPARING FEED FOR IMPROVING BLUE FOX FUR QUALITY	2023/04/21
2023/04849	A ROXBURGH ROSE FLAVOR BEVERAGE AND A PREPARATION METHOD THEREOF	2023/04/28
2023/04850	INTEGRATED RICE AND DUCK CULTIVATING METHOD IN WHOLE PLANTING PERIOD OF RICE	2023/04/28
2023/04852	RADIO NETWORK PERFORMANCE OPTIMIZATION SYSTEM AND METHOD	2023/04/28
2023/05203	DISASSEMBLY AND ASSEMBLY DEVICE ASSISTED BY A WATER TURBINE	2023/05/11

Application Number	Patent Title	Filing Date
2023/05534	PERSON RE-IDENTIFICATION METHOD AND APPARATUS BASED ON SELF-SUPERVISED LEARNING, DEVICE AND STORAGE MEDIUM	2023/05/23
2023/06453	VERTICAL LIGHT-EMITTING DIODE	2023/06/21
2023/07199	LARGE-SCALE GNSS NETWORK PARALLEL RESOLUTION METHOD AND SYSTEM BASED ON DYNAMIC PARTIONING	2023/07/18
2023/07854	A FIBER GRATING SENSOR FOR UNDERGROUND STRESS MONITORING	2023/08/11
2023/08000	PROCESSES AND/OR MACHINES FOR PRODUCING CONTINUOUS PLASTIC DEFORMATION, AND/OR COMPOSITIONS AND/OR MANUFACTURES PRODUCED THEREBY	2023/08/17
2023/08389	ROCK BREAKING CUTTER SUCTION DREDGER AND DREDGING CONSTRUCTION METHOD THEREOF	2023/08/30
2023/08437	BACK-END LASER INTEGRATION DEVICE FOR HIGH-END LASER DICING MACHINE OF MINILED CHIP	2023/08/31
2023/08458	TRUNCATED EVANS BLUE MODIFIED FIBROBLAST ACTIVATION PROTEIN INHIBITOR, PREPARATION METHOD THEREFOR, AND APPLICATION THEREOF	2023/08/31
2023/08459	COMPOUND TARGETING PROSTATE SPECIFIC MEMBRANE ANTIGEN, AND PREPARATION METHOD THEREFOR AND USE THEREOF	2023/08/31
2023/08487	FIXED-COLUMN TYPE CANTILEVER CRANE	2023/09/04
2023/08499	AUTOPILOT SYSTEM FOR MARINE VESSELS	2023/09/04
2023/08534	NEAR-INFRARED BRAIN INJURY DETECTION METHOD AND DETECTION DEVICE	2023/09/05
2023/08893	SOLID WASTE-BASED 3D PRINTING MATERIAL	2023/09/20
2023/08970	WATER-BASED SEALED POLYISOCYANATE CURING AGENT AND PREPARATION METHOD AND APPLICATION THEREOF	2023/09/21
2023/08971	PREFABRICATED CONCRETE CONNECTION STRUCTURE AND CONSTRUCTION METHOD	2023/09/21

DESIGNS

Advertisement List for October 2023

Number of Advertised Designs: 150

Application Number	Design Articles	Filing Date
A2020/00594	INTERACTIVE TRAILER	2020/05/14
A2020/01700	Automobile	2020/12/23
A2021/00472	Water Filter Cartridge	2021/05/03
A2022/00035	Cargo Platform	2022/01/11
A2022/00043	Wheel	2022/01/13
A2022/00337	Storage Container	2022/03/31
A2022/00639	Conveyor Belt	2022/06/09
A2022/00682	COMBS FOR TRIMMERS	2022/06/17
A2022/00701	SHAVERS	2022/06/22
A2022/00702	SURFACE PATTERNS	2022/06/22
A2022/00703	SHAVERS	2022/06/22
A2022/00704	SHAVERS	2022/06/22
A2022/00705	SHAVERS	2022/06/22
A2022/00706	SURFACE PATTERNS	2022/06/22
A2022/00707	SURFACE PATTERNS	2022/06/22
A2022/00708	SURFACE PATTERNS	2022/06/22
A2022/00734	BARBEQUE	2022/06/24
A2022/00910	GRAPHIC DESIGNS FOR PRODUCT PACKAGING	2022/08/10
A2022/00915	GRAPHIC DESIGNS FOR PRODUCT PACKAGING	2022/08/10
A2022/00916	GRAPHIC DESIGNS FOR PRODUCT PACKAGING	2022/08/10
A2022/00917	GRAPHIC DESIGNS FOR PRODUCT PACKAGING	2022/08/10
A2022/00931	SANITARY ARTICLES	2022/08/15
A2022/00932	SANITARY ARTICLES	2022/08/15
A2022/00933	SANITARY ARTICLES	2022/08/15
A2022/00934	SANITARY ARTICLES	2022/08/15
A2022/00935	SANITARY ARTICLES	2022/08/15
A2022/00936	SANITARY ARTICLES	2022/08/15
A2022/00937	SANITARY ARTICLES	2022/08/15
A2022/00938	ORNAMENTATION	2022/08/15
A2022/00939	ORNAMENTATION	2022/08/15
A2022/01212	WASHBASIN	2022/10/06
A2022/01407	COFFEE MACHINES	2022/11/08
A2022/01408	COFFEE MACHINES	2022/11/08
A2022/01409	COFFEE MACHINES	2022/11/08
A2022/01624	LINEAR SURGICAL STAPLERS	2022/12/13
A2022/01625	LINEAR SURGICAL STAPLERS	2022/12/13
A2022/01626	SURGICAL STAPLERS	2022/12/13
A2022/01627	LINEAR SURGICAL STAPLERS	2022/12/13
A2022/01650	USER INTERFACES	2022/12/15
A2022/01651	USER INTERFACES	2022/12/15

Application Number	Design Articles	Filing Date
A2022/01652	USER INTERFACES	2022/12/15
A2022/01653	USER INTERFACES	2022/12/15
A2022/01654	USER INTERFACES	2022/12/15
A2022/01655	USER INTERFACES	2022/12/15
A2022/01658	USER INTERFACES	2022/12/15
A2022/01659	USER INTERFACES	2022/12/15
A2022/01660	USER INTERFACES	2022/12/15
A2022/01661	USER INTERFACES	2022/12/15
A2022/01662	USER INTERFACES	2022/12/15
A2022/01663	USER INTERFACES	2022/12/15
A2022/01664	USER INTERFACES	2022/12/15
A2022/01665	USER INTERFACES	2022/12/15
A2022/01672	Car	2022/12/20
A2022/01673	Toy Car	2022/12/20
A2022/01676	CYLINDERS	2022/12/21
A2022/01677	CYLINDERS	2022/12/21
A2022/01684	SNUS CAN	2022/12/22
A2022/01685	SNUS CAN	2022/12/22
A2022/01686	SNUS CAN	2022/12/22
A2022/01687	SNUS CAN	2022/12/22
A2022/01688	SNUS CAN	2022/12/22
A2022/01690	SNUS CAN	2022/12/22
A2022/01691	SNUS CAN	2022/12/22
A2022/01692	SEQUENCING INSTRUMENT	2022/12/22
A2022/01693	REAGENT CARTRIDGE	2022/12/22
A2022/01694	FLOW CELL CARTRIDGE	2022/12/22
A2022/01695	REAGENT CARTRIDGE	2022/12/22
A2023/00012	Tyre Tread	2023/01/03
A2023/00018	CARS	2023/01/05
A2023/00027	RETENTION COMPONENTS	2023/01/06
A2023/00028	RETENTION COMPONENTS	2023/01/06
A2023/00029	RETENTION COMPONENTS	2023/01/06
A2023/00030	RETENTION COMPONENTS	2023/01/06
A2023/00031	RETENTION COMPONENTS	2023/01/06
A2023/00032	RETENTION COMPONENTS	2023/01/06
A2023/00033	RETENTION COMPONENTS	2023/01/06
A2023/00034	Pilates Chair Exercise Apparatus	2023/01/09
A2023/00035	Pilates Chair Exercise Apparatus	2023/01/09
A2023/00036	Pilates Chair Exercise Apparatus	2023/01/09
A2023/00037	Pilates Chair Exercise Apparatus	2023/01/09
A2023/00040	MOBILE PHONES	2023/01/09
A2023/00041	MOBILE PHONES	2023/01/09
A2023/00042	PANTS	2023/01/10
A2023/00043	PANTS	2023/01/10
A2023/00044	PANTS	2023/01/10
A2023/00045	PANTS	2023/01/10
A2023/00046	PANTS	2023/01/10
A2023/00047	PANTS	2023/01/10
A2023/00048	PANTS	2023/01/10
A2023/00049	PANTS	2023/01/10

Application Number	Design Articles	Filing Date
A2023/00051	WEAR MEMBERS	2023/01/11
A2023/00052	WEAR MEMBERS	2023/01/11
A2023/00053	WEAR MEMBERS	2023/01/11
A2023/00055	Automobile	2023/01/12
A2023/00062	Electrical Switch	2023/01/13
A2023/00064	Electrical Switch	2023/01/13
A2023/00065	Electrical Switch	2023/01/13
A2023/00066	Electrical Switch	2023/01/13
A2023/00067	Electrical Switch	2023/01/13
A2023/00077	Container	2023/01/17
A2023/00079	BATTERY ENCLOSURE	2023/01/17
A2023/00083	TYRES AND TYRE TREADS	2023/01/19
A2023/00084	TROLLEY	2023/01/20
A2023/00086	TROLLEY	2023/01/20
A2023/00087	CAP	2023/01/23
A2023/00089	BOTTLES	2023/01/23
A2023/00090	BOTTLES	2023/01/23
A2023/00091	BOTTLES	2023/01/23
A2023/00095	Sensor	2023/01/24
A2023/00096	Sensor	2023/01/24
A2023/00097	Sensor	2023/01/24
A2023/00101	CONNECTOR	2023/01/25
A2023/00102	UNIT FOR THUMBSTICK OF CONTROLLER FOR ELECTRONIC DEVICE	2023/01/25
A2023/00103	HOUSING OF CONTROLLER FOR ELECTRONIC DEVICE	2023/01/25
A2023/00104	HOUSING OF CONTROLLER FOR ELECTRONIC DEVICE	2023/01/25
A2023/00105	THUMBSTICK OF CONTROLLER FOR ELECTRONIC DEVICE	2023/01/25
A2023/00106	HOUSING OF CONTROLLER	2023/01/25
A2023/00107	HOUSING OF CONTROLLER FOR ELECTRONIC DEVICE	2023/01/25
A2023/00108	CONTROLLER FOR ELECTRONIC DEVICE	2023/01/25
A2023/00110	UNIT FOR THUMBSTICK OF CONTROLLER FOR ELECTRONIC DEVICE	2023/01/25
A2023/00111	CONTROLLER FOR ELECTRONIC DEVICE	2023/01/25
A2023/00113	CONTROLLER FOR ELECTRONIC DEVICE	2023/01/25
A2023/00114	THUMBSTICK OF CONTROLLER FOR ELECTRONIC DEVICE	2023/01/25
A2023/00115	LOW VOLTAGE CONNECTOR PANELS	2023/01/26
A2023/00117	Outsole	2023/01/26
A2023/00123	BOTTLE	2023/01/27
A2023/00125	PULL TAB	2023/01/27
A2023/00172	DISPOSABLE DIAPER	2023/02/09

Application Number	Design Articles	Filing Date
A2023/00175	A COOKING APPARATUS	2023/02/09
A2023/00177	A COOKING ACCESSORY	2023/02/09
A2023/00199	CONTAINER A	2023/02/15
A2023/00276	ORNAMENTATION FOR A PACKAGING BOX	2023/02/27
A2023/00277	PACKAGING, PACKAGING BOX (PART OF-) OR ORNAMENTATION FOR PACKAGING, IN PARTICULAR FOR HEATED TOBACCO CONSUMABLES PACKAGING	2023/02/27
A2023/00278	PACKAGING, PACKAGING BOX (PART OF-) OR ORNAMENTATION FOR PACKAGING, IN PARTICULAR FOR AEROSOL GENERATING DEVICE PACKAGING	2023/02/27
F2021/01030	BOTTLE CARRIER	2021/09/06
F2022/00586	Blank for a Carton	2022/05/25
F2022/01581	BATTERY PACK	2022/12/07
F2022/01590	TUB	2022/12/08
F2023/00072	Step Drill Bits	2023/01/16
F2023/00080	BATTERY ENCLOSURE	2023/01/17
F2023/00088	CAP	2023/01/23
F2023/00116	LOW VOLTAGE CONNECTOR PANELS	2023/01/26
F2023/00121	Container Lids	2023/01/26
F2023/00126	PULL TAB	2023/01/27
F2023/00148	TRUCK BODIES	2023/02/02
F2023/00176	A COOKING APPARATUS	2023/02/09
F2023/00178	A COOKING ACCESSORY	2023/02/09
F2023/00868	VALVE	2023/07/27
F2023/00883	WALL MOUNT ADAPTOR	2023/07/31
F2023/00884	WALL PLUG	2023/07/31