PATENT JOURNAL

INCLUDING TRADE MARKS, DESIGNS AND COPYRIGHT IN CINEMATOGRAPH FILMS

NOVEMBER 2026 **VOL 59 ● No. 11**

Companies and Intellectual Property Commission
a member of the dtic group

Part II of II

ISSUED MONTHLY **DATE OF ISSUE: 25 NOVEMBER 2026**

ISSN 2223-4837

PATENT JOURNAL

INCLUDING TRADE MARKS, DESIGNS AND COPYRIGHT IN CINEMATOGRAPH FILMS

VOL. 59 No. 11 **Date of Issue: 25 NOVEMBER 2026**

PATENTS, TRADE MARKS, DESIGNS AND COPYRIGHT OFFICE

Official notices of proceedings under:

The Patents Act, 1978
The Designs Act, 1993
The Trade Marks Act, 1963
The Trade Marks Act, 1993
The Registration of Copyright in Cinematograph Films Act, 1977

Registrar of Patents, Trade Marks, Designs and Copyright

Note: CIPC acting on behalf of the Government of the Republic of South Africa, cannot guarantee the accuracy of its publications or undertake any responsibility for errors or omissions or their consequences.

TABLE OF CONTENTS

2. PATENTS 4
APPLICATIONS FOR PATENTS 5
ASSIGNMENTS IN TERMS OF SECTION 60-REGULATIONS 58-60 AND 64 (1) 109
CHANGE OF NAME IN TERMS OF REGULATION 39 114
PATENT LICENSES IN TERMS OF SECTION 60-REGULATIONS 58-60 AND 64 115
PATENT APPLICATIONS ABANDONED OR WITHDRAWN 115
APPLICATION FOR RESTORATION OF A LAPSED PATENT 115
VOLUNTARY SURRENDER OF A PATENT UNDER SECTION 64 (1), REGULATION 67 OF THE ACT 117
APPLICATION FOR CORRECTION IN TERMS OF SECTION 50 117
APPLICATIONS TO AMEND SPECIFICATION 118
INSPECTION OF SPECIFICATIONS 118
HYPOTHECATIONS 475
JUDGMENTS 475
OFFICE PRACTICE NOTICES 475
3. DESIGNS 476
APPLICATIONS FOR REGISTRATION OF DESIGNS IN TERMS OF ACT No. 195 OF 1993 477
APPLICATION FOR THE RESTORATION OF A LAPSED DESIGN UNDER SECTION 23 OF THE ACT 477
VOLUNTARY SURRENDER OF A DESIGN IN TERMS OF SECTION 34 REGULATION 42(4) OF THE DESIGN ACT 477
APPLICATION TO CORRECT AND/OR AMEND DESIGNS APPLICATION OR REGISTRATION 477
NOTICE OF REGISTRATION OF DESIGNS 477
APPLICATION FOR THE RESTORATION OF A LAPSED DESIGN UNDER SECTION 23 OF THE ACT 482
VOLUNTARY SURRENDER OF A DESIGN IN TERMS OF SECTION 34 REGULATION 42(4) OF THE DESIGN ACT 482
APPLICATION TO CORRECT AND/OR AMEND DESIGNS APPLICATION OR REGISTRATION 482
NOTICE OF REGISTRATION OF DESIGNS 482
HYPOTHECATIONS 526
JUDGMENTS 526
OFFICE PRACTICE NOTICES 526
4. COPYRIGHT 527
NOTICES OF ACCEPTANCE 528
HYPOTHECATIONS 529
JUDGMENTS 529
OFFICE PRACTICE NOTICES 529
5. CORRECTION NOTICES 530
TRADE MARKS CORRECTION NOTICES 531
PATENTS CORRECTION NOTICES 531
DESIGNS CORRECTION NOTICES 531
COPYRIGHT CORRECTION NOTICES 532
PATENTS 533
DESIGNS 578
OTHER OFFICE NOTICES 581

2. PATENTS

PATENTS

APPLICATIONS FOR PATENTS

Copies of these specifications cannot be supplied until the applications have been accepted and advertised, or in the case of convention applications, until 18 months from the date of the application in the convention

THE PARTICULARS APPEAR IN THE FOLLOWING SEQUENCE:

The numerical references denote the following: **(21)** Number of application. **(22)** Date of application. **(43)** Date of acceptance. **(51)** Class. **(71)** Name of applicant(s). **(72)** Name of all inventors. **(33)** Country. **(31)** Number and **(32)** Date of convention application. **(54)** Title of invention. **(00)** Number of sheets.

. - APPLIED ON 2026/10/23 -

2026/10196 ~ Complete ~54:STIRRING AND MIXING DEVICE FOR MODIFIED CARBON-REDUCTION MATERIALS ~71:CENTRAL SOUTH UNIVERSITY, NO. 932 LUSHAN SOUTH ROAD, CHANGSHA CITY, People's Republic of China ~72: CHEN, Zhu;WANG, Yixian~

2026/10199 ~ Complete ~54:INTRANASAL EPINEPHRINE FORMULATIONS AND METHODS FOR THE TREATMENT OF DISEASE ~71:AEGIS THERAPEUTICS, LLC, 11770 Bernardo Plaza Court, Suite 353, United States of America;ARS PHARMACEUTICALS OPERATIONS, INC., 8195 Run of the Knolls Ct., United States of America ~72: BELL, Robert G.;LOWENTHAL, Richard;MAGGIO, Edward T.;SHAH, Pratik~ 33:US ~31:15/890,131 ~32:06/02/2018;33:US ~31:62/685,049 ~32:14/06/2018;33:US ~31:62/734,550 ~32:21/09/2018;33:US ~31:62/784,057 ~32:21/12/2018

2026/10184 ~ Provisional ~54:SYSTEM AND METHOD FOR LOCATION-TRIGGERED ACCESSIBLE AUDIO GUIDANCE AND VISITOR SAFETY ALERTING AT VISITOR ATTRACTIONS, USING A LONG-RANGE LOW-POWER RADIO NETWORK AND A SHARED CONTENT PLATFORM ~71:Gugulethu Khethiwe Mkhwanazi, 928 Sagwityi Street Commercia ext34, South Africa ~72: Gugulethu Khethiwe Mkhwanazi~

2026/10201 ~ Complete ~54:A DOCUMENT ANALYSIS SYSTEM USING RETRIEVAL-AUGMENTED GENERATION WITH INTEGRATED ANALYTICS ~71:VISHWAKARMA INSTITUTE OF TECHNOLOGY, 666, UPPER MARKET RD, UPPER INDIRA NAGAR, BIBWEWADI, PUNE, MAHARASHTRA, 411037, India;VISHWAKARMA UNIVERSITY, SURVEY NO 2 3, 4, KONDHWA MAIN RD, LAXMI NAGAR, BETAL NAGAR, KONDHWA, PUNE, MAHARASHTRA, 411048, India ~72: ARGULWAR, Mayuresh;MALI, Aadit;MALI, Manisha Pavin;PARDESHI, Anushka;PATIL, Swati Bula~

2026/10206 ~ Complete ~54:IMPROVEMENTS IN OR RELATING TO ORGANIC COMPOUNDS ~71:GIVAUDAN SA, Chemin de la Parfumerie 5, VERNIER 1214, SWITZERLAND, Switzerland ~72: ABRAM, Isabelle;BLONDEAU, Philippe;DAL ZOTTO, Claire;FORTINEAU, Anne-Dominique;RHODES, Sophie~ 33:GB ~31:2404307.7 ~32:26/03/2024

2026/10214 ~ Complete ~54:KRAS G12D DEGRADATION AGENT AS WELL AS PREPARATION METHOD THEREFOR AND USE THEREOF ~71:LEADINGTAC PHARMACEUTICAL (SHAOXING) CO., LTD., Suite 1001, Floor 10, Building 9, Dongsheng Huigu Industrial Park, 1299 Kehai Avenue, Anchang Street, Keqiao District, Shaoxing, Zhejiang, 312030, People's Republic of China ~72: DING, Chenli;FENG, Yan;XU, Juan;YE, Zhengqing~ 33:CN ~31:202410478693.9 ~32:19/04/2024;33:CN ~31:202411404465.3 ~32:10/10/2024;33:CN ~31:202510077196.2 ~32:17/01/2025;33:CN ~31:202510462465.7 ~32:11/04/2025

2026/10217 ~ Complete ~54:SPREADING MACHINE AND ROW UNIT FOR A SPREADING MACHINE ~71:AMAZONEN-WERKE H. DREYER SE & CO. KG, Am Amazonenwerk 9-13, 49205, Hasbergen, Germany

~72: BREUER, Jan Henrik;FEICK, Steffen;KOCH, Jens;WILLENBROCK, Jens~ 33:DE ~31:10 2024 115 627.9 ~32:05/06/2024

2026/10743 ~ Provisional ~54:HEALTCHOICE PATENT ~71:TimothyJabulani Mahlangu, 404 Mandela Village, South Africa ~72: TimothyJabulani Mahlangu~

2026/10746 ~ Provisional ~54:MOBAIT PATENT ~71:TimothyJabulani Mahlangu, 404 Mandela Village, South Africa ~72: TimothyJabulani Mahlangu~

2026/10744 ~ Provisional ~54:AGENTRUST PATENT ~71:TimothyJabulani Mahlangu, 404 Mandela Village, South Africa ~72: Sylivester Sithole~

2026/10204 ~ Complete ~54:FOUNDATION PART OF TOMBSTONE ~71:Yama to Mizu, LLC, 1-1-1, Katayama, Imabari-shi, Ehime, 7940063, Japan ~72: OGAWA Kouhei;OGAWA Masahiro~ 33:JP ~31:JP2024069339 ~32:22/04/2024

2026/10207 ~ Complete ~54:POLYNUCLEOTIDE COMPOSITIONS AND USES THEREOF ~71:PFIZER INC., 66 Hudson Boulevard East, NEW YORK 10001-2192, NY, USA, United States of America ~72: CHE, Ye;DONALD, Robert George Konrad;MCMONAGLE, Patricia Michele;SILMON DE MONERRI, Natalie Clare~ 33:US ~31:63/569,959 ~32:26/03/2024;33:US ~31:63/770,673 ~32:12/03/2025

2026/10216 ~ Complete ~54:APPLICATION MACHINE, AND ROW UNIT FOR AN APPLICATION MACHINE ~71:AMAZONEN-WERKE H. DREYER SE & CO. KG, Am Amazonenwerk 9-13 49205 Hasbergen, Germany ~72: HENKE, Christian;KOCH, Jens;WILLENBROCK, Jens~ 33:DE ~31:10 2024 115 627.9 ~32:05/06/2024;33:DE ~31:10 2024 120 965.8 ~32:24/07/2024

2026/10189 ~ Complete ~54:A COLLECTION APPARATUS FOR MEDICAL RECORD INFORMATION STATISTICS ~71:WANG, BINGTAO, No. 6, Dongfeng Road, Jinshui District, Zhengzhou, Henan Province, People's Republic of China ~72: WANG, BINGTAO~

2026/10191 ~ Complete ~54:PAY-OFF APPARATUS FOR WIRE DRAWING MACHINE AND WIRE DRAWING MACHINE ~71:Ningbo Hanbo Precious Metal Alloy Co., Ltd., East Gate No. 4, Building 1,No. 266 Dongsheng Road, Jiaochuan Subdistrict, Zhenhai District, Ningbo City, Zhejiang Province, 518108, People's Republic of China ~72: Guojin HUANG;Jianhua SHI;Jinqiu YAO;Wenlong YAN;Xianbo WAN~ 33:CN ~31:2026104775543 ~32:13/04/2026

2026/10193 ~ Complete ~54:A SPATIOTEMPORAL RISK ASSESSMENT METHOD FOR SOIL HARMFUL ORGANISMS BASED ON SOIL EDNA ~71:Institute of Plant Protection, Henan Academy of Agricultural Sciences, 116 Huayuan Road, Jinshui District, Zhengzhou City, Henan Province, 450002, People's Republic of China ~72: Chen Qi;Gong Zhongjun;Li, Huiling;Pan Zhengmao;Zhang Jing~

2026/10209 ~ Complete ~54:LINER FOR GYRATORY OR CONICAL CRUSHER ~71:METSO USA INC., 275 N. Corporate Drive, BROOKFIELD 53045, WI, USA, United States of America ~72: BRADER, Timothy David;MALKAMÄKI, Mikko;SCHELLINGER, Greg Scott;TALVITIE, Topi Markku Taneli~ 33:US ~31:18/658,188 ~32:08/05/2024

2026/10210 ~ Complete ~54:MOLD FLOW CONTROL DEVICE FOR CONTINUOUS CASTING MOLD ~71:ABB SCHWEIZ AG, Bruggerstrasse 66, BADEN CH-5400, SWITZERLAND, Switzerland;SMS GROUP GMBH, Eduard-Schloemann-Straße 4, DÜSSELDORF 40237, GERMANY, Germany ~72: AKMESE, Yasin;HOFFMEISTER, Jörn;JACOBSON, Nils Peter;KLOS, Wilfried;LENSING, Frank;RYDHOLM, Bengt;VALLMAN, Niklas;YANG, Hongliang~

2026/10215 ~ Complete ~54:SOWING MACHINE AND ROW UNIT FOR A SOWING MACHINE ~71:AMAZONEN-WERKE H. DREYER SE & CO. KG, Am Amazonenwerk 9-13 49205 Hasbergen, Germany ~72: BREUER, Jan Henrik;FEICK, Steffen;HILBERT, Florenz;KOCH, Jens~ 33:DE ~31:10 2024 115 613.9 ~32:05/06/2024

2026/10185 ~ Provisional ~54:SYSTEM AND METHOD FOR COORDINATING ELECTRIC ENERGY TRANSACTIONS ~71:WEPENER, William, Arthur, Kerr, 601/2685 GOLD COAST HIGHWAY, BROADBEACH GOLD COAST, QLD 4218, AUSTRALIA, Australia ~72: WEPENER, William, Arthur, Kerr~

2026/10190 ~ Complete ~54:PIGMENT COATING POSITIONING TOOL FOR ARCHITECTURAL POLYCHROME PAINTINGS RESTORATION ~71:Anhui Technical College of Mechanical and Electrical Engineering, No.16, West WenJin Road, Yijiang District, Wuhu, Anhui, 241002, People's Republic of China ~72: Mina Zhu;Wang Chen~

2026/10192 ~ Complete ~54:A METHOD FOR IDENTIFYING THE INDICATOR ELEMENTS OF THE ORE-FORMING FLUIDS IN MAGMATIC HYDROTHERMAL MINERAL DEPOSITS ~71:Kunming University of Science and Technology, Kunming University of Science and Technology (Lianhua Campus), No. 68, Wenchang Road, 121 Avenue, Wuhua District, Kunming City, Yunnan Province, 650093, People's Republic of China ~72: Bode Lu;Cong Luo;Jingjing Ao;Liurunxuan Chen;Na Zhang;Ruifen Zhao;Wenchang Li;Xianchao Chen;Xuelong Liu;Zhipeng Li;Zhiqi Mang~ 33:CN ~31:202610074410.3 ~32:20/01/2026

2026/10197 ~ Complete ~54:AQUATIC BIOMASS SOLID-LIQUID SEPARATION DEVICE ~71:CENTRAL SOUTH UNIVERSITY, NO. 932 LUSHAN SOUTH ROAD, CHANGSHA CITY, People's Republic of China ~72: CHEN, Zhu;WANG, Yixian~

2026/10212 ~ Complete ~54:VARIABLE ADMITTANCE-BASED FAULT CURRENT LIMITING SYSTEM AND METHOD FOR GRID-FORMING CONVERTER ~71:CRRC ZHUZHOU INSTITUTE CO., LTD., No.169 Shidai Road, Shifeng District, Zhuzhou, People's Republic of China ~72: FENG, Ling;FU, Jianguo;HU, Liang;LI, Hongbo;LIANG, Xifan;LIU, Haoran;MEI, Wenqing;SUN, Lu;WANG, Yue;ZHANG, Chaoyang;ZHANG, Zhixue;ZHOU, Zhenbang~ 33:CN ~31:202411706014.5 ~32:26/11/2024

2026/10218 ~ Complete ~54:COMPOUND AS VOLTAGE-GATED SODIUM CHANNEL INHIBITOR AND USE THEREOF ~71:APICHOPE BIO PHARMACEUTICAL CO., LTD., Room 101, Building 1, No.6, Dongbo Road, East Huangpu District Guangzhou, Guangdong 510000, People's Republic of China;GUANGZHOU APICHOPE PHARMACEUTICAL CO., LTD., No.6, Dongbo Road, District East, Guangzhou Economic-Technological Development Area Guangzhou, Guangdong 510000, People's Republic of China;GUANGZHOU RUNLIN PHARMACEUTICAL TECHNOLOGY CO., LTD., Room 601-1, Building 202, No. 76, Dongjie Road, Huangpu District Guangzhou, Guangdong 510000, People's Republic of China;GUANGZHOU UNIRISE PHARMACEUTICAL CO., LTD., Floor 5, Building 101, No.2, Tongfa Road, Wanqingsha Town, Nansha District Guangzhou, Guangdong 510000, People's Republic of China ~72: GAO, Cui;LAI, Qingying;LIU, Xile;WANG, Hui;YANG, Wenqian;ZHANG, Pengtao~ 33:CN ~31:202410483482.4 ~32:19/04/2024;33:CN ~31:202411125232.X ~32:15/08/2024

2026/10205 ~ Complete ~54:CONJUGATES OF ANTI-PTK7 ANTIBODIES ~71:SOLVE THERAPEUTICS, INC., 11045 Roselle Street, Suite 130, United States of America ~72: JESSEN, Katti;LANNUTTI, Brian;POW, Andrew;WATKINS, Jeff~ 33:US ~31:63/640,733 ~32:30/04/2024;33:US ~31:63/722,553 ~32:19/11/2024

2026/10213 ~ Complete ~54:UTR FOR PROMOTING RNA TRANSLATION ~71:BEIJING JITAI LIFE SCIENCES LTD, No. 350, Middle Section, 2nd Floor, Building A, No. 3 Courtyard, No. 9 Yongfeng Road Haidian District, Beijing 100094, People's Republic of China;METIS TECHBIO CO., LTD., Room 201, 2nd Floor, Building 13, No. 21 Tianhe West Road, Zhongguancun Science Park Daxing Biomedical Industry Base Daxing District, Beijing

102629, People's Republic of China;TSINGHUA UNIVERSITY, Qinghua Yuan 1, Haidian District, Beijing, 100084, People's Republic of China ~72: LIU, Andong;LV, Yao;MAO, Qinxin;WANG, Lina;WU, Ding;YANG, Xuerui;YE, Zihui;YU, Yifan;ZHANG, Xiaoju~ 33:CN ~31:202410354542.2 ~32:26/03/2024;33:CN ~31:202410354702.3 ~32:26/03/2024

2026/10222 ~ Complete ~54:PREAMBLE DETECTION METHOD AND COMMUNICATION APPARATUS ~71:HUAWEI TECHNOLOGIES CO., LTD., Huawei Administration Building, Bantian, People's Republic of China ~72: GAN, Ming;GUO, Yuchen;LI, Yunbo;ZHAO, Yue~ 33:CN ~31:202410571895.8 ~32:09/05/2024

2026/10188 ~ Provisional ~54:COMPUTER - IMPLEMENTED SYSTEM AND METHOD FOR AUTOMATED DECISION VERIFICATION, BIAS REMOVAL AND REGULATORY COMPLIANCE (BLINDDECIDE) ~71:PORTIA MBALI MOSALA, 16 FERREIRA AVENUE PRESIDA, South Africa ~72: PORTIA MBALI MOSALA~

2026/10194 ~ Complete ~54:USE OF EXOCARPIUM CITRI GRANDIS-DERIVED EXOSOME-LIKE NANOVESICLES IN PREPARATION OF DRUG FOR TREATING ACUTE LUNG INJURY ~71:MAOMING PEOPLE'S HOSPITAL, NO. 101, WEIMIN ROAD, MAONAN DISTRICT, MAOMING CITY, People's Republic of China ~72: CHEN, Jianyi;CHEN, Minyi;HUANG, Jinbo;HUANG, Wendong;YANG, Yanfang;YI, Qingxia~

2026/10200 ~ Complete ~54:AN AUTOMATED HELMET VIOLATION DETECTION AND LICENSE PLATE RECOGNITION SYSTEM FOR TRAFFIC ENFORCEMENT ~71:VISHWAKARMA INSTITUTE OF TECHNOLOGY, 666, UPPER MARKET RD, UPPER INDIRA NAGAR, BIBWEWADI, PUNE, MAHARASHTRA, 411037, India;VISHWAKARMA UNIVERSITY, SURVEY NO 2 3, 4, KONDHWA MAIN RD, LAXMI NAGAR, BETAL NAGAR, KONDHWA, PUNE, MAHARASHTRA, 411048, India ~72: KHANDERAO, Gavhale Gaurishankar;NAGNATH, Salunke Nikita;PATIL, Swati Bula;RATHI, Snehal Rahul;RATNAKAR, Kothekar Mrunali;SAMEER, Attar Amrin~

2026/10211 ~ Complete ~54:DEVICE FOR AERODYNAMIC IMPROVEMENT IN VEHICLES OR IN CONTAINERS ~71:ECO EOLIC TOP SYSTEM S.L., Velázquez, 51. 5º Derecha, Spain ~72: ESTEFAN BELLAN, Abdón Miguel;FINO PUERTO, Pedro Antonio;VARGAS MACHADO, Carlos Mauricio~ 33:ES ~31:P202430235 ~32:27/03/2024

2026/10221 ~ Complete ~54:4H-PYRIMIDO[1,2-A]PYRIMIDIN-4-ONE DERIVATIVES FOR USE AS NLRP3 INFLAMMASOME INHIBITORS FOR THE TREATMENT OF NEURODEGENERATIVE DISORDER ~71:TAKEDA PHARMACEUTICAL COMPANY LIMITED, 1-1, Doshomachi 4-Chome Chuo-ku Osaka-shi, Osaka, 541-0045, Japan ~72: HASUI, Tomoaki;HIDAKA, Kosuke;HOMMA, Misaki;IMAMURA, Keisuke;KAKEI, Hiroyuki;KAMATA, Makoto;KAMEI, Taku;KIKUCHI, Fumiaki;MIKAMI, Satoshi;MORIMOTO, Shinji;NAKAMURA, Minoru;OGURO, Yuya;SUGIMOTO, Takahiro;TANAKA, Yuta;TOITA, Akinori;TOYOFUKU, Masashi;WANG, Chunxiang;YAMAGUCHI, Fumie;YOSHIKAWA, Masato~ 33:US ~31:63/643,589 ~32:07/05/2024;33:US ~31:63/703,505 ~32:04/10/2024

2026/10220 ~ Complete ~54:BISPECIFIC ANTIBODIES THAT BIND TO CD28 AND NECTIN-4 ~71:RONDO THERAPEUTICS, INC., 25801 Industrial Boulevard, Suite 500, Hayward, California 94545, United States of America ~72: CHEN, Elaine;CLARKE, Starlynn;DAVISON, Laura M;FORCE ALDRED, Shelley;HARRIS, Katherine E;KAUR, Manpreet;RANGASWAMY, Udaya;RÜGER, Katja;TRINKLEIN, Nathan~ 33:US ~31:63/643,345 ~32:06/05/2024;33:US ~31:63/695,765 ~32:17/09/2024

2026/10186 ~ Provisional ~54:ADDENDUM 1 TO 2026/10023 - ROAD ROLL SCREEN SYSTEM 300MMX500MMX70MM BASIC AND PRO ~71:TEBOHO DANIEL MONARE, E30 MORULA STREET WINDSOR SECTION PHOKENG, South Africa ~72: TEBOHO DANIEL MONARE~ 33:ZA ~31:2026/10023 ~32:16/10/2026

2026/10187 ~ Provisional ~54:COMMERCIAL STICK ON PRESCRIPTION LENS - CORRECTIVE OPTICAL FILM TO AN EXISTING LENS OF ORDINARY GLASSES ~71:MR ALSASHA M SCHULTZ, 335 Homer Avenue Davidsonville Roodepoort, 58 Rubidge street Westrand, Roodepoort, 1724, South Africa ~72: MR ALSASHA M SCHULTZ~

2026/10195 ~ Complete ~54:RAINFALL-REDUCTION TEST DEVICE USED IN FORESTS AND OUTDOORS, AND INSTALLATION METHOD THEREFOR ~71:ECOLOGY AND NATURE CONSERVATION INSTITUTE, CHINESE ACADEMY OF FORESTRY, No.2 Dongxiaofu, Xiangshan Road, Haidian District, Beijing, 100091, People's Republic of China;HUBEI ACADEMY OF FORESTRY, No.39, Fenglin Road, Donghu New Technology Development Zone, Wuhan, Hubei, 430075, People's Republic of China;TAIZISHAN FOREST FARM ADMINISTRATION OF HUBEI PROVINCE, Shilong Town, Jingshan City, Jingmen City, Hubei Province, 431822, People's Republic of China ~72: Chunyong XU;Hu Lin;Lei LEI;Lixiong ZENG;Wenfa XIAO;Wenjie HU;Yafei SHEN;Zunji JIAN~

2026/10198 ~ Complete ~54:METHOD FOR UNIFORM SALT PENETRATION TREATMENT DURING THE FERMENTATION STAGE OF FERMENTED BEAN CURD ~71:HEFEI DONGGONG BEAN PRODUCTS CO., LTD., UNIT 01, BUILDING 9, ZHONGKE DONGCHENG INDUSTRIAL PARK, WEST OF XIANGHE SOUTH ROAD, FEIDONG ECONOMIC DEVELOPMENT ZONE, FEIDONG COUNTY, HEFEI CITY, People's Republic of China;HUAINAN NORMAL UNIVERSITY, DONGSHAN WEST ROAD, TIANJIA'AN DISTRICT, HUAINAN CITY, People's Republic of China ~72: Yan Shoubao;Yin Linlin~

2026/10202 ~ Complete ~54:THERMOELECTRIC CONVERSION HEAT DISSIPATION DEVICE INTEGRATED ON GLASS SUBSTRATE ~71:Ji'an Electro-Science Integrated Circuit and Communication Transmission Laboratory Technology Co., Ltd., Room 403, 4th Floor, Building 4, IoT Maker Park, No. 238 Shenzhen Avenue, Jinggangshan Economic and Technological Development Zone, Ji'an City, Jiangxi Province, 343100, People's Republic of China;Jinggangshan University, No. 28 Xueyuan Road, Qingyuan District, Ji'an City, Jiangxi Province, 343009, People's Republic of China ~72: LI Shihua;LI Zhipeng;TANG Weidong;WU Bo;XIAO Kaixuan;XU Zhiliang;YOU Xinyu;ZHANG Yehua~ 33:CN ~31:2025116852264 ~32:18/11/2025

2026/10219 ~ Complete ~54:METHOD AND DEVICE FOR INTERACTION BETWEEN MOBILE TERMINAL AND VEHICLE ~71:CHERY AUTOMOBILE CO., LTD., No. 8, Changchun Road, Economy & Technology Development Zone, Wuhu, 241006, Anhui, People's Republic of China ~72: XIE, Shengbao~ 33:CN ~31:202510063765.8 ~32:15/01/2025

2026/10203 ~ Complete ~54:A MULTI-MODEL ARTIFICIAL INTELLIGENCE SYSTEM FOR AUTOMATED EMAIL ANALYSIS, PRIORITIZATION AND INTELLIGENT CLASSIFICATION ~71:VISHWAKARMA INSTITUTE OF TECHNOLOGY, 666, UPPER MARKET RD, UPPER INDIRA NAGAR, BIBWEWADI, PUNE, MAHARASHTRA, 411037, India;VISHWAKARMA UNIVERSITY, SURVEY NO 2 3, 4, KONDHWA MAIN RD, LAXMI NAGAR, BETAL NAGAR, KONDHWA, PUNE, MAHARASHTRA, 411048, India ~72: BOROLE, Harshita Kishor;DESHMUKH, Gargi Pankaj;KODMEKWAR, Manohar K.;PATIL, Swati Bula~

2026/10208 ~ Complete ~54:ENGINEERED ORTHOPOXVIRUS PROTEINS AND RELATED METHODS ~71:VACCINE COMPANY, INC., c/o ELI LILLY AND COMPANY, Lilly Corporate Center, INDIANAPOLIS 46285, IN, USA, United States of America ~72: LEDGERWOOD, Julie Evelyn;POWELL, Abigail E.;WEIDENBACHER, Payton Anders-Benner~ 33:US ~31:63/639,520 ~32:26/04/2024

. - APPLIED ON 2026/10/26 -

2026/10453 ~ Provisional ~54:SYSTEMS AND METHODS FOR EVIDENCE-GATED TRUST ~71:Enrico Leitch, 17 Allium Street, South Africa ~72: Enrico Leitch~

2026/10230 ~ Provisional ~54:GOLF SWING TRAINING APPARATUS ~71:Philip Michael Beukes, 15 Heidepark Ysterhout Crescent, South Africa;Philip Michael Beukes, 15 Heidepark Ysterhout Crescent, South Africa ~72: Philip Michael Beukes~

2026/10233 ~ Provisional ~54:DIGITALIZATION OF ROLLING STOCK COUPLERS ~71:Sathesh Prahalad Ramlal, 2339 Karibbiese Avenue Rand Park Ridge, South Africa ~72: Sathesh Prahalad Ramlal~

2026/10260 ~ Complete ~54:THERAPEUTIC COMBINATION AND USE ~71:AKESO BIOPHARMA CO., LTD., 6 Shennong Road, Torch Development Zone, ZHONGSHAN 528437, GUANGDONG, CHINA (P.R.C.), People's Republic of China;AKESO HUIKE (SHANGHAI) CO. LTD., Floor 3, 665 Zhangjiang Road, China (Shanghai) Pilot Free Trade Zone, Pudong New Area, SHANGHAI 200137, CHINA (P.R.C.), People's Republic of China ~72: LI, Baiyong;WANG, Zhongmin;XIA, Yu~ 33:CN ~31:202410363531.0 ~32:27/03/2024

2026/10262 ~ Complete ~54:RING BURNER FOR THE MANUFACTURE OF MINERAL FIBRES ~71:SAINT-GOBAIN ISOVER, Tour Saint-Gobain, 12 place de l'Iris, COURBEVOIE 92400, FRANCE, France ~72: BONHOMME, Vincent;VERDIER, Antoine~ 33:FR ~31:FR2404812 ~32:07/05/2024

2026/10224 ~ Provisional ~54:HYBRID CHILLER SYSTEMS WUE ~71:AJ ADAMS, 143 circle road, South Africa ~72: ALEXANDER JAMES ADAMS~

2026/10226 ~ Provisional ~54:THERMA-LOCK ~71:KATE ROSANNE HORNE, 14 CEDAR STREET, South Africa ~72: KATE ROSANNE HORNE~

2026/10236 ~ Complete ~54:TEMPERATURE-RESPONSIVE VALVE CORE ASSEMBLY AND STEAM TRAP ~71:Dalian Keenwise Industrial Technology Co., Ltd., 1-2/F, No. 2-1 Penghong Street, Dalian Economic and Technological Development Zone, Dalian, Liaoning Province, 116699, People's Republic of China ~72: CHANG, Yu~ 33:CN ~31:2026212094578 ~32:05/08/2026;33:CN ~31:2026111861327 ~32:06/08/2026;33:CN ~31:2026111861346 ~32:06/08/2026;33:CN ~31:2026212094629 ~32:06/08/2026

2026/10238 ~ Complete ~54:AI-DRIVEN GENETIC PIGMENTATION PREDICTION USING MULTIGENIC AND EPIGENETIC ANALYSIS ~71:CT College of Pharmacy, Shahpur, Jalandhar, Punjab, 144020, India;CT Institute of Engineering, Management & Technology, Shahpur, Jalandhar, Punjab, 144020, India;CT Institute of Pharmaceutical Sciences, Shahpur, Jalandhar, Punjab, 144020, India;CT Institute of Technology and Research, Maqsudan, Jalandhar, Punjab, 144008, India;CT University, School of Engineering and Technology, Ferozpur Rd, Sidhwan Khurd, Ludhiana, Punjab, 142024, India;CT University, School of Pharmaceutical Sciences, Ferozpur Rd, Sidhwan Khurd, Ludhiana, Punjab, 142024, India ~72: Akshay Thakur;Dr. Diksha Bhatt;Dr. Nitin Tandon;Dr. Satvir Singh;Dr. Vaneet Kumar;Dr.Gagandeep Singh;Priyakshi Rana~

2026/10240 ~ Complete ~54:AI-DRIVEN GENOMIC HAIR QUALITY PREDICTION AND FORECASTING SYSTEM ~71:CT College of Pharmacy, Shahpur, Jalandhar, Punjab, 144020, India;CT Institute of Engineering, Management & Technology, Shahpur, Jalandhar, Punjab, 144020, India;CT Institute of Pharmaceutical Sciences, Shahpur, Jalandhar, Punjab, 144020, India;CT Institute of Technology and Research, Maqsudan, Jalandhar, Punjab, 144008, India;CT University, School of Engineering and Technology, Ferozpur Rd, Sidhwan Khurd, Ludhiana, Punjab, 142024, India;CT University, School of Pharmaceutical Sciences, Ferozpur Rd, Sidhwan Khurd, Ludhiana, Punjab, 142024, India ~72: Ankita Rangra;Dr. Nitin Tandon;Dr. Satvir Singh;Dr. Simarjeet Kaur;Dr.Inderpal Singh;Harpreet Kaur;Sukhpreet Kaur~

2026/10257 ~ Complete ~54:COMMUNICATION METHOD AND APPARATUS ~71:HUAWEI TECHNOLOGIES CO., LTD., Huawei Administration Building, Bantian, Longgang District, People's Republic of China ~72: GAN, Ming;RUAN, Wei;YU, Jian~ 33:CN ~31:202410549402.0 ~32:30/04/2024

2026/10261 ~ Complete ~54:ELECTRIC GLASS-MAKING FURNACE ~71:SAINT-GOBAIN ISOVER, Tour Saint-Gobain, 12 place de l'Iris, COURBEVOIE 92400, FRANCE, France ~72: DE DIANOUS, Philippe;GERVAIS, Joel;JEAN, Cyril;SAGET, Aurelien~ 33:FR ~31:FR2404805 ~32:07/05/2024

2026/10413 ~ Provisional ~54:ELWYZORA TECHNOLOGIES ~71:AUREXDIGITALP (PTY) LTD, 137, South Africa ~72: AUREXDIGITALP (PTY) LTD~

2026/10242 ~ Complete ~54:DESIGNER SIGNATURE RECOGNITION AND DESIGN PLAGIARISM DETECTION SYSTEM ~71:CT Institute of Engineering, Management & Technology, Shahpur, Jalandhar, Punjab, 144020, India;CT Institute of Management and IT, Maqsudan, Jalandhar, Punjab, 144008, India;CT Institute of Technology and Research, Maqsudan, Jalandhar, Punjab, 144008, India;CT University, School of Engineering and Technology, Ferozpur Rd, Sidhwan Khurd, Ludhiana, Punjab, 142024, India;CT University, School of Management Studies, Ferozpur Rd, Sidhwan Khurd, Ludhiana, Punjab, 142024, India ~72: Dr. Adish Kumar;Dr. Anjali;Dr. Ankita Makkar;Dr. Kangan Sayal;Dr. Manbir Singh;Mamta Devi~

2026/10251 ~ Complete ~54:WEARABLE DEVICE FOR GUIDING VISUALLY IMPAIRED PERSON ~71:KYUNGIL UNIVERSITY INDUSTRY-ACADEMIC COOPERATION, 50 Gamasil-gil, Hayang-eup, Gyeongsan-si, Gyeongsangbuk-do, 38428, Republic of Korea ~72: KWON, Seonggeun~ 33:KR ~31:10-2026-0009322 ~32:16/01/2026

2026/10254 ~ Complete ~54:FILTER BOTTLE DEVICE, FILTER BOTTLE ASSEMBLY AND FILTER BOTTLE CAP ASSEMBLY ~71:YUYAO YADONG PLASTIC CO., LTD., Weijia Village, Moushan Town, Yuyao City, Ningbo, Zhejiang, 315456, People's Republic of China ~72: Jizong HU;Zhenlin CHU~ 33:CN ~31:202420803161.3 ~32:17/04/2024;33:CN ~31:202421240839.8 ~32:01/06/2024;33:CN ~31:202422066414.6 ~32:25/08/2024;33:CN ~31:202411256217.9 ~32:06/09/2024;33:CN ~31:202422195844.8 ~32:06/09/2024

2026/10256 ~ Complete ~54:KAT6 INHIBITORS ~71:BEONE MEDICINES I GMBH, Aeschengraben 27, Switzerland ~72: GUO, Yunhang;WANG, Qiuwen;WANG, Yayi;WANG, Zhiwei~ 33:CN ~31:PCT/CN2024/084840 ~32:29/03/2024;33:CN ~31:PCT/CN2024/117463 ~32:06/09/2024;33:CN ~31:PCT/CN2025/072209 ~32:14/01/2025

2026/10267 ~ Complete ~54:KINESIN KIF18A INHIBITOR AND METHOD FOR USING SAME ~71:SHANGHAI QILU PHARMACEUTICAL RESEARCH AND DEVELOPMENT CENTRE LTD., Building 3, No. 576 Li Bing Road, No. 56 Faraday Road, China (Shanghai) Pilot Free Trade Zone, Pudong New Area, Shanghai, 201203, People's Republic of China ~72: CHEN, Fei;CHI, Bo;FAN, Lili;QIAN, Wenyuan;SUN, Daqing;SUN, Weimei;TAO, Weikang;WEI, Wei;WU, Shijie;ZHENG, Xiaoping~ 33:CN ~31:202410362057.X ~32:27/03/2024;33:CN ~31:202410799138.6 ~32:19/06/2024;33:CN ~31:202510032448.X ~32:08/01/2025;33:CN ~31:202510338448.2 ~32:20/03/2025

2026/10274 ~ Provisional ~54:ASLA CONCRETE FRAMED STRUCTURE ~71:ASLA OPERATIONS PTY LTD., 25 JAN CONRADIE CRESCENT ASLA PARK, STRAND, South Africa ~72: PETRUS ARNOLDUS BLAAUW~

2026/10243 ~ Complete ~54:AI-BASED REGIONAL RECIPE RECOGNITION AND CULTURAL CULINARY FINGERPRINTING SYSTEM ~71:CT Institute of Engineering, Management & Technology, Shahpur, Jalandhar, Punjab, 144020, India;CT Institute of Management and IT, Maqsudan, Jalandhar, Punjab, 144008, India;CT Institute of Technology and Research, ,Maqsudan, Jalandhar, Punjab, 144008, India;CT University, School of Engineering and Technology, Ferozpur Rd, Sidhwan Khurd, Ludhiana, Punjab, 142024, India;CT University, School of Management Studies, Ferozpur Rd, Sidhwan Khurd, Ludhiana, Punjab, 142024, India ~72: Davinder Singh;Dr. Kangan Sayal;Dr. Manbir Singh;Dr. Nitin Tandon;Dr. Sangram Singh;Harleen Kaur~

2026/10247 ~ Complete ~54:FIBRE REINFORCED FILMS ~71:MEGA PLAST INDUSTRIAL-EXPORTING S.A., Heraklion Industrial Area, Street A/D 18 Industrial Sector, HERAKLION 71601, CRETE, GREECE, Greece ~72: KAVVADIAS, Charilaos;TSOUKLERI, Georgia~ 33:GR ~31:20260100724 ~32:14/07/2026

2026/10252 ~ Complete ~54:IMPROVED SUB-ASSEMBLY FOR DUST SUPPRESSION IN ROCK DRILLING ~71:DRILLTERRA TECHNOLOGIES (PTY) LTD, 116 Woodland Ridge Road Muscle Creek, Australia ~72: HANNS, David~ 33:AU ~31:2024901229 ~32:30/04/2024

2026/10255 ~ Complete ~54:PERIODONTAL PROBE ~71:SHAFFER, Lisa, 3 Shull Farm Road, Erwinna, PA 18920, United States of America ~72: SHAFFER, Lisa~ 33:US ~31:63/573,292 ~32:02/04/2024

2026/10263 ~ Complete ~54:ASSEMBLY-GAP MEASURING APPARATUS FOR STEAM TURBINES AND MEASURING METHOD THEREOF ~71:Anhui Taineng Electric Power Equipment Co., Ltd., Building 1, Science and Technology Complex, Cao'an Industrial Park Economic Development Zone, Tianjia'an District, Huainan, Anhui, 232000, People's Republic of China ~72: DING, Youyue;HAN, Yujun;WANG, Yong;YU, Ruilin;ZHANG, Zhen~ 33:CN ~31:2025120065882 ~32:29/12/2025

2026/10265 ~ Complete ~54:INFUSION TUBE FOR MEDICAL APPLICATIONS, INFUSION PUMP, ELASTOMER INFUSION PUMP ~71:B. BRAUN MELSUNGEN AG, Carl-Braun-Strasse 1, Germany ~72: KATERKAMP, Andreas;MÖRL, Stefan;SENKOWSKI, Volker;VON DER LÜHE, Moritz~ 33:DE ~31:10 2024 112 385.0 ~32:02/05/2024

2026/10228 ~ Provisional ~54:ENERGY-HARVESTING SMART FLOORING SYSTEM ~71:Pathfinder South Africa (Pty) Ltd, 2 Dockrail road, South Africa ~72: Matthew Scholtz~

2026/10246 ~ Complete ~54:AI-BASED ORIGINAL BACKGROUND SCORE IDENTIFICATION AND PLAGIARISM DETECTION USING MUSICAL DNA ~71:CT Institute of Engineering, Management & Technology, Shahpur, Jalandhar, Punjab, 144020, India;CT Institute of Management and IT, Maqsudan, Jalandhar, Punjab, 144008, India;CT Institute of Technology and Research, Maqsudan, Jalandhar, Punjab, 144008, India;CT University, School of Engineering and Technology, Ferozpur Rd, Sidhwan Khurd, Ludhiana, Punjab, 142024, India;CT University, School of Management Studies, Ferozpur Rd, Ludhiana, Sidhwan Khurd, Punjab, 142024, India ~72: Dr. Anu Arora;Dr. Ishpreet Singh Virk;Dr. Manbir Singh;Dr. Manisha Aggarwal;Dr. Sapna Sharma;Shreya Arora~

2026/10249 ~ Complete ~54:METHOD FOR ASSISTING IN ENHANCING PLANT REGENERATION CAPACITY ASSISTED BY REGENERATION-RELATED FACTOR ~71:SHANDONG AGRICULTURAL UNIVERSITY, No. 61, Daizong Street, Taishan District, Tai'an City, Shandong Province, 271018, People's Republic of China ~72: Baozhong WU;Chuanyou LI;Wenxin ZHOU;Xin XU;Xinyu LI;Yang YU;Yu CHAO;Yueyan LIU;Zimo WANG~

2026/10259 ~ Complete ~54:ARNT DEGRADING COMPOUNDS AND USES THEREOF ~71:CELGENE CORPORATION, Route 206 and Province Line Road, PRINCETON 08543, NJ, USA, United States of America ~72: BAUGHMAN, Joshua M.;HENTZ, Alexandre;MULLER, Christophe;MULLER, Sandra;PIETTRE, Arnaud;QUAN, Mimi;RIGGS, Jennifer;SIMMONS, Bryan J.;SPIELMANN, Kim;ZAPF, Christoph W.~ 33:US ~31:63/653,427 ~32:30/05/2024

2026/10271 ~ Complete ~54:A PERISTALTIC PUMP AND METHOD ~71:WATSON-MARLOW BREDEL B.V., Sluisstraat 7 P.O.Box 47, NL-7490 AA, Delden, Netherlands ~72: MOLENVELD, Vincent;VAN DER SPAN, Fokke Patrick~ 33:GB ~31:2406041.0 ~32:30/04/2024

2026/10276 ~ Provisional ~54:PORTABLE IMMERSIVE MULTI-SENSORY LEARNING DESK SYSTEM ~71:Lindsey Ann Robertson, 8 Magnum Street, Jagtershof, South Africa ~72: Lindsey Ann Robertson~

2026/10266 ~ Complete ~54:METHOD FOR PROTECTING AGAINST STRESS AND INCREASING GROWTH IN PLANTS ~71:AGENCIA ESTATAL CONSEJO SUPERIOR DE INVESTIGACIONES CIENTÍFICAS, M.P., C/ Serrano, 117, Spain;TRADE CORPORATION INTERNATIONAL S.A.U., Parque Empresarial Cristalia, Edificio Onic 5, 6ª planta, Calle Vía de los Poblados, 3, Spain;UNIVERSIDAD POLITÉCNICA DE MADRID, Avda. Rami10 dc Macztu 7, Spain ~72: CABRERA CHAVES, Javier;CONESA QUINTANA, Carlos Manuel;DEL POZO BENITO, Juan Carlos;DEVESA ARANGUREN, Iván;NOLASCO BETHENCOURT, José Basilio;SACRISTÁN BENAYAS, María Soledad;UGENA GARCÍA-CONSUEGRA, Lydia~ 33:ES ~31:P202430247 ~32:03/04/2024

2026/10270 ~ Complete ~54:SYSTEMS AND METHODS FOR DETERMINING COMPOSITE CONDUCTOR PARAMETERS USING OPTICAL FIBERS ~71:TS CONDUCTOR CORP., 15272 Newsboy Circle, Huntington Beach, California, 92649, United States of America ~72: HE, Qing;HUANG, Jianzhong Jason~ 33:US ~31:63/638,196 ~32:24/04/2024

2026/10272 ~ Complete ~54:PROCESS FOR THE PREPARATION OF A HYDROLYZED EXTRACT FROM ALGAE ~71:SICIT GROUP S.P.A., Via Arzignano, 80, 36072, Chiampo (VI), Italy ~72: BRINTRUP MEEDER, Marcelo Fernando;CATTAZZO, Alberto;DALLA BENETTA, Andrea;PITUELLO, Chiara;PÉREZ ASCENCIO, Felipe Igor;ROCCHIO, Gabriele;RUMIGNANI, Alberto~ 33:IT ~31:102024000012163 ~32:28/05/2024

2026/10223 ~ Provisional ~54:DFV1-11 ~71:MR ALFRED D T BERE, 5 13th Avenue, Fairland, JOHANNESBURG, Gauteng, 2170, South Africa ~72: Rodney Dube~

2026/10227 ~ Provisional ~54:PRESSURE VESSEL HAVING A ROLLED FILM-AND-ELASTOMER WALL, HEATED CONSTANT-PRESSURE STORED-GAS SUPPLY, AND REUSABLE STORED-FLUID LIFT STAGE INCORPORATING THEM ~71:DAVID MAURICE CONRADIE, 6 VILLA CHRISTIAAN, 98 MANIE ROAD, South Africa ~72: DAVID MAURICE CONRADIE~

2026/10232 ~ Provisional ~54:A GENERIC ANY-CLOUD, ANY-HSM ARCHITECTURE FOR FAIR LENDING AND COMPLIANCE AUTOMATION ~71:PORTIA MBALI MOSALA, 16 FERREIRA AVENUE, PRESIDA, South Africa ~72: PORTIA MBALI MOSALA~

2026/10234 ~ Provisional ~54:NETWORKED ULTRAVIOLET MARKING DEVICE, SECURE USAGE COUNTER AND EVENT MANAGEMENT SYSTEM ~71:Tshepo Kolobe, 34 Second Avenue, South Africa ~72: Tshepo Kolobe~

2026/10239 ~ Complete ~54:AI-BASED CULTURAL ART INTEGRATION SYSTEM FOR PHYSICAL ARTICLES ~71:CT Institute of Engineering, Management & Technology, Shahpur, Jalandhar, Jalandhar, Punjab, 144020, India;CT Institute of Management and IT, Maqsudan, Jalandhar, Punjab, 144008, India;CT Institute of Technology and Research, Maqsudan, Jalandhar, Punjab, 144008, India;CT University, School of Engineering and Technology, Ferozpur Rd, Sidhwan Khurd, Ludhiana, Punjab, 142024, India;CT University, School of Management Studies, Ferozpur Rd, Sidhwan Khurd, Ludhiana, Punjab, 142024, India ~72: Dr. Anju Bala;Dr. Davinder Kaur;Dr. Harmeet Singh;Dr. Jayaashish Shadiram Sethi;Dr. Manbir Singh;Er.Ramandeep Kaur~

2026/10244 ~ Complete ~54:AI SYSTEM FOR REGIONAL TONE AND ACCENT IDENTIFICATION USING MULTI-LAYER ACOUSTIC SIGNATURE ANALYSIS ~71:CT Institute of Engineering, Management & Technology, Shahpur, Jalandhar, Punjab, 144020, India;CT Institute of Technology and Research, Maqsudan, Jalandhar, Punjab, 144008, India;CT University, School of Engineering and Technology, Ferozpur Rd, Sidhwan Khurd, Ludhiana, Punjab, 142024, India ~72: Baby Jha;Kanika Handa;Sukhpreet Kaur~

2026/10248 ~ Complete ~54:ANTI-BCMA CAR T CELL COMPOSITIONS ~71:2seventy bio, Inc., 60 Binney Street, Cambridge 02142, MA, USA, United States of America ~72: QUIGLEY, Travis;ROSS, Robert~ 33:US ~31:62/417,840 ~32:04/11/2016;33:US ~31:62/514,401 ~32:02/06/2017

2026/10250 ~ Complete ~54:LIQUID PHARMACEUTICAL FORMULATIONS OF PTH CONJUGATES ~71:ASCENDIS PHARMA BONE DISEASES A/S, TUBORG BOULEVARD 12, 2900 HELLERUP, DENMARK, Denmark ~72: BARON, Julia;CLEEMANN, Felix;HOFFMANN, Eric;SKANDS, Anja R.H;SPROGØE, Kennett;SØRENSEN, Michael, Duelund~ 33:EP ~31:19156485.5 ~32:11/02/2019;33:EP ~31:19168857.1 ~32:12/04/2019

2026/10225 ~ Provisional ~54:HYBRID CHILLER SYSTEMS WUE ~71:AJ ADAMS, 143 circle road, South Africa ~72: ALEXANDER JAMES ADAMS~

2026/10229 ~ Provisional ~54:NOVEL METAL WOOD HEAD AND SHAFT ATTACHMENT DESIGN AND MEANS OF ATTACHING THE SHAFT TO THE HEAD ~71:Philip Michael Beukes, 15 Heidepark Ysterhout Crescent, South Africa ~72: Philip Michael Beukes~

2026/10231 ~ Provisional ~54:MATERNITY BRA ~71:NTSANWISI, Ninakhulu, 7 Westbourne Road, House 4, BRYANSTON 2191, Gauteng, SOUTH AFRICA, South Africa ~72: NTSANWISI, Ninakhulu~

2026/10235 ~ Provisional ~54:GLOBAL DIGITAL VALUE EXCHANGE PROTOCOL AND SYSTEM FOR VERIFIED VALUATION ATTESTATION AND CROSS BORDER TRADING OF PHYSICAL AND DIGITAL ASSETS USING VALUE SCORE - PREMIUM HIGH PERFORMANCE EXTENSION ~71:Makhado Nkhumeleni Rodney, 623 Tshaulu Tshilaphala, South Africa ~72: Makhado Nkhumeleni Rodney~ 33:ZA ~31:2026/10068 ~32:20/10/2026

2026/10237 ~ Complete ~54:AI-DRIVEN GENETIC-DEVELOPMENTAL PREDICTION SYSTEM FOR PEDIATRIC DENTAL ANOMALIES ~71:CT College of Pharmacy, Shahpur, Jalandhar, Punjab, 144020, India;CT Institute of Engineering, Management & Technology, Shahpur, Jalandhar, Punjab, 144020, India;CT Institute of Pharmaceutical Sciences, Shahpur, Jalandhar, Punjab, 144020, India;CT Institute of Technology and Research, Maqsudan, Jalandhar, Punjab, 144008, India;CT University, School of Engineering and Technology, Ferozpur Rd, Sidhwan Khurd, Ludhiana, Punjab, 142024, India;CT University, School of Pharmaceutical Sciences, Ferozpur Rd, Sidhwan Khurd, Ludhiana, Punjab, 142024, India ~72: Akshay Kumar;Dr. Anurag Sharma;Dr. Nitin Tandon;Dr. Satvir Singh;Dr. Vaneet Kumar;Jyotika Rani;Ramanand Mishra~

2026/10241 ~ Complete ~54:AI-BASED EMBROIDERY RECOGNITION AND CLASSIFICATION USING MULTI-LAYER FEATURE ANALYSIS ~71:CT Institute of Engineering, Management & Technology, Shahpur, Jalandhar, Punjab, 144020, India;CT Institute of Technology and Research, Maqsudan, Jalandhar, Punjab, 144008, India;CT University, School of Engineering and Technology, Ferozpur Rd, Sidhwan Khurd, Punjab, 142024, India ~72: Dr. Nitin Tandon;Dr. Priyanka Nanda;Karuna;Supreet Kaur~

2026/10245 ~ Complete ~54:PERSONALIZED MOOD-ELEVATING COLOUR IDENTIFICATION SYSTEM ~71:CT Institute of Engineering, Management & Technology, Shahpur, Jalandhar, Punjab, 144020, India;CT Institute of Management and IT, Maqsudan, Jalandhar, Punjab, 144008, India;CT Institute of Technology and Research, Maqsudan, Jalandhar, Punjab, 144008, India;CT University, School of Engineering and Technology, Ferozpur Rd, Sidhwan Khurd, Ludhiana, Punjab, 142024, India;CT University, School of Management Studies, Ferozpur Rd, Sidhwan Khurd, Ludhiana, Punjab, 142024, India ~72: Arvin Vinayek;Dr. Manbir Singh;Dr. Manisha Aggarwal;Dr. Rajni;Priya Khanna;Siksha Saxena~

2026/10253 ~ Complete ~54:DELAY STATUS REPORT ~71:NOKIA TECHNOLOGIES OY, Karakaari 7, Finland ~72: KOSKINEN, Henri Markus;ROSA, Claudio;SEBIRE, Benoist Pierre;WU, Chunli~

2026/10258 ~ Complete ~54:MINING ROPE DIAGNOSTICS ~71:ABB SCHWEIZ AG, Bruggerstrasse 66, BADEN 5400, SWITZERLAND, Switzerland ~72: DAVIS, Mike;GARTNER, Tim;KRYNISKI, Krystof;MARTIN, Sean;NOLKRANTZ, Daniel~

2026/10264 ~ Complete ~54:HIGH-VELOCITY OXY-FUEL SPRAYING PROCESS FOR STEAM-TURBINE BLADES ~71:Anhui Taineng Electric Power Equipment Co., Ltd., Building 1, Science and Technology Complex, Cao'an Industrial Park Economic Development Zone, Tianjia'an District, Huainan, Anhui, 232000, People's Republic of China ~72: DING, Youyue;HAN, Yujun;LV, Hongjun;YU, Ruilin;ZHANG, Zhen~ 33:CN ~31:2026104478176 ~32:07/04/2026

2026/10268 ~ Complete ~54:COMPOSITION FOR HAIR STRENGTHENING ~71:GODREJ CONSUMER PRODUCTS LTD., 4th Floor, Godrej One, Pirojshanagar, Eastern Express Highway, Vikhroli (East), Mumbai 400079, Maharashtra, India ~72: NAYAK, Meghana;RAGHAVACHARI, Rajan;UPADHYAY, Shruti;YADLAPALLI, Venkateswara~ 33:IN ~31:202421063958 ~32:23/08/2024

2026/10269 ~ Complete ~54:GLASS FURNACE ~71:AGC GLASS EUROPE, Avenue Jean Monnet 4, 1348, Louvain-la-Neuve, Belgium ~72: BIOUL, François;BOURGEOIS, Nicolas~ 33:EP ~31:24189002.9 ~32:16/07/2024

2026/10273 ~ Complete ~54:PROCESS FOR RECOVERING NICKEL FROM NICKEL-HYPERACCUMULATOR PLANT BIOCHAR ~71:GENOMINES, 8 Avenue du Hêtre, 94170, Le Perreux-sur-Marne, France ~72: MATAR, Naeif;MIRZA, Reem;ONAL, Mehmet;PINATEL, Nathan;RASHID, Dali~ 33:EP ~31:24305668.6 ~32:29/04/2024;33:EP ~31:24306263.5 ~32:25/07/2024

2026/10275 ~ Provisional ~54:LOCKABLE MAGNET HOUSING FOR POUCHES OR RELATED MAGNETIC RELEASE COMPONENTS ~71:WV FOURIE, 285 Jan Neetling Road, South Africa ~72: WV FOURIE~

. - APPLIED ON 2026/10/27 -

2026/10335 ~ Complete ~54:LOW POWER OPERATIONS ~71:LENOVO (BEIJING) LIMITED, 6 Shangdi West Road Haidian District, Beijing, 100085, People's Republic of China ~72: HAN, Jing;HU, Jie;LIU, Luning;WANG, Haiming;YAN, Zhi~

2026/10277 ~ Provisional ~54:TWO-STAGE SELF-TIGHTENING CANTILEVER EXERCISE DEVICE ~71:DANI DWORCAN, 64 ekron complex gate #3, South Africa ~72: DANI DWORCAN~

2026/10281 ~ Provisional ~54:SYSTEM AND METHOD FOR DETECTING A PURSUING VEHICLE USING FUSED VEHICLE IDENTITY AND DISCRETIONARY MANOEUVRE ANALYSIS ~71:MOLLO ROBOTICS (PTY) LTD, 37 Shannon Street, South Africa ~72: Shaun Sipumeze Mkhohliwe~

2026/10286 ~ Provisional ~54:A STANDALONE, NETWORK-RESILIENT VEHICLE TELEMETRY AND NON-IMAGING PASSENGER METRICS SYSTEM WITH CLOUD-BASED FINANCIAL PROCESSING. ~71:Ntuthuko Lawrence Ndlovu, 1156, Polar Park, Adams Mission, Amanzimtoti, South Africa ~72: Ntuthuko Lawrence Ndlovu~

2026/10291 ~ Provisional ~54:ATTESTATION OF A SECURE ELEMENT AND CORROBORATION OF INDIVIDUAL IDENTITY ~71:GELDENHUYS, Albertus Barend, Via Camana 3, Switzerland ~72: GELDENHUYS, Albertus Barend~

2026/10293 ~ Provisional ~54:ARTIFICIAL-INTELLIGENCE INTERACTION LAYER FOR A PORTABLE IMMERSIVE MULTISENSORY LEARNING DESK SYSTEM ~71:LINDSEY ANN ROBERTSON, 15 De La Reyville Court, Eureka Estate, 39th Avenue, Elsies River, Western Cape, South Africa ~72: LINDSEY ANN ROBERTSON~

2026/10308 ~ Complete ~54:A DYNAMIC CROWD PANIC PREDICTION SYSTEM FOR REAL-TIME MONITORING AND EMERGENCY RESPONSE ~71:VISHWAKARMA INSTITUTE OF TECHNOLOGY, 666, UPPER MARKET RD, UPPER INDIRA NAGAR, BIBWEWADI, PUNE, MAHARASHTRA, 411037,

India;VISHWAKARMA UNIVERSITY, SURVEY NO 2 3, 4, KONDHWA MAIN RD, LAXMI NAGAR, BETAL NAGAR, KONDHWA, PUNE, MAHARASHTRA, 411048, India ~72: PASHIKANTI, Rajesh;RAUT, Avinash Bhanudas;RAUT, Ketan Janraoji~

2026/10313 ~ Complete ~54:A SYSTEM FOR REAL-TIME MULTI-VECTOR THREAT DETECTION IN IOT ENVIRONMENTS ~71:VISHWAKARMA INSTITUTE OF TECHNOLOGY, 666, UPPER MARKET RD, UPPER INDIRA NAGAR, BIBWEWADI, PUNE, MAHARASHTRA, 411037, India;VISHWAKARMA UNIVERSITY, SURVEY NO 2 3, 4, KONDHWA MAIN RD, LAXMI NAGAR, BETAL NAGAR, KONDHWA, PUNE, MAHARASHTRA, 411048, India ~72: GAIKWAD, Vidya;HARSOLA, Krish Amit;KUMAWAT, Chiranjilal Dayanand;MADDERLAWAR, Dhruv Rajesh;MAHADAR, Ishika Abhijeet~

2026/10317 ~ Complete ~54:A MACHINE LEARNING BASED AUTOMATIC INTRUSION DETECTION SYSTEM FOR REAL-TIME NETWORK SECURITY ~71:VISHWAKARMA INSTITUTE OF TECHNOLOGY, 666, UPPER MARKET RD, UPPER INDIRA NAGAR, BIBWEWADI, PUNE, MAHARASHTRA, 411037, India;VISHWAKARMA UNIVERSITY, SURVEY NO 2 3, 4, KONDHWA MAIN RD, LAXMI NAGAR, BETAL NAGAR, KONDHWA, PUNE, MAHARASHTRA, 411048, India ~72: BOOTWALA, Ebrahim Aliasgar;KADAM, Sujal Sunil;KATHURIA, Kartik Pratap;PATIL, Swati Bula;WANKHEDE, Disha Sushant~

2026/10321 ~ Complete ~54:A SYSTEM FOR CONTEXTUAL AMBIENT AUDIO RETRIEVAL USING KEYWORD DETECTION AND VISUAL ATTENTION TRACKING ~71:VISHWAKARMA INSTITUTE OF TECHNOLOGY, 666, UPPER MARKET RD, UPPER INDIRA NAGAR, BIBWEWADI, PUNE, MAHARASHTRA, 411037, India;VISHWAKARMA UNIVERSITY, SURVEY NO 2 3, 4, KONDHWA MAIN RD, LAXMI NAGAR, BETAL NAGAR, KONDHWA, PUNE, MAHARASHTRA, 411048, India ~72: CHAUDHARI, Prasad;GUJRATHI, Shruti Ganesh;SURYAWANSHI, Amol Shivajirao~

2026/10327 ~ Complete ~54:SYSTEMS AND METHODS FOR USE IN PLANTING SEEDS IN GROWING SPACES ~71:MONSANTO TECHNOLOGY LLC, 800 North Lindbergh Blvd., ST. LOUIS 63167, MO, USA, United States of America ~72: JACOBS, Morrison;LOCKWOOD, Chris;SHAHHOSSEINI, Mohsen;SOOD, Shilpa~ 33:US ~31:63/571,249 ~32:28/03/2024

2026/10333 ~ Complete ~54:ANTI-HUMAN DLL3 ANTIBODY-CAMPTOTHECIN DERIVATIVE CONJUGATES AND MEDICAL USES THEREOF ~71:SYSTIMMUNE, INC., 15318 NE 95th St, REDMOND 98052, WA, USA, United States of America ~72: LI, Gangrui;WAN, Weili;ZHANG, Yong;ZHU, Yi;ZHUO, Shi~ 33:CN ~31:202410529362.3 ~32:29/04/2024

2026/10342 ~ Complete ~54:VERTICAL CARBON ACTIVATION RETORT ~71:KDB CARBON (PTY) LTD., 116 Kromdraai, Old Middelburg Road R555, Witbank, Mpumalanga, 1035, South Africa ~72: HOWELL , Darryl Bentley;PREMJI, Karim~ 33:GB ~31:2401142.1 ~32:29/01/2024

2026/10278 ~ Provisional ~54:FOOD STORAGE MONITORING SYSTEM, CONTAINER, SENSING MODULE AND REPLACEABLE INDICATOR CASSETTE WITH TEMPERATURE- AND HUMIDITY-COMPENSATED AMINE SENSING, TEMPERATURE-HISTORY PRECEDENCE AND CRYPTOGRAPHICALLY SIGNED, HASH-CHAINED HANDLING RECORDS ~71:Nanogeios Laboratory, 5 Sturdee Avenue, Suite 301, Rosebank, Johannesburg, Gauteng, 2196, South Africa ~72: Abdelmoumen Shad SERROUNE~

2026/10283 ~ Provisional ~54:BOTTOM DRAWER FRONT INSTALLATION BRACKET ~71:Frans JOOSTE, 8 LADY SMITH STREET, South Africa ~72: Frans JOOSTE~

2026/10290 ~ Provisional ~54:ATOMIC MULTI-PARTY SETTLEMENT AUTHORISED BY A VERIFIED IDENTITY DETERMINATION OF AN INDIVIDUAL ANIMAL ~71:GELDENHUYS, Albertus Barend, Via Camana 3, Switzerland ~72: GELDENHUYS, Albertus Barend~

2026/10296 ~ Provisional ~54:AN ASYMMETRIC MICROFLUIDIC DELIVERY DEVICE AND RHEOLOGICAL-MATCHING METHOD FOR ON-DEMAND TIP-MIXING OF HIGH-PH CAUSTIC POTASSIUM SILICATE AND LOW-PH ORGANIC ACID BIOSTIMULANT FORMULATIONS ~71:Larry Van Vuuren, 62 Sayster Street, Salsoneville, South Africa ~72: Larry Van Vuuren~

2026/10302 ~ Complete ~54:AN ELECTRICAL FIRE HAZARD MONITORING SYSTEM FOR ASSESSING FIRE RISK IN AN INDOOR SPACE ~71:VISHWAKARMA INSTITUTE OF TECHNOLOGY, 666, UPPER MARKET RD, UPPER INDIRA NAGAR, BIBWEWADI, PUNE, MAHARASHTRA, 411037, India;VISHWAKARMA UNIVERSITY, SURVEY NO 2 3, 4, KONDHWA MAIN RD, LAXMI NAGAR, BETAL NAGAR, KONDHWA, PUNE, MAHARASHTRA, 411048, India ~72: KADAM, Rohit Chandrakant;KADU, Anil Baban;MENGAWADE, Rohan Prashant;PARDESHI, Rudra Amar;PATIL, Rutuja Satywan;SANGIT, Romir Rahul~

2026/10304 ~ Complete ~54:A REAL TIME FACIAL RECOGNITION SYSTEM WITH LIVENESS DETECTION AND CLOUD STORAGE ~71:VISHWAKARMA INSTITUTE OF TECHNOLOGY, 666, UPPER MARKET RD, UPPER INDIRA NAGAR, BIBWEWADI, PUNE, MAHARASHTRA, 411037, India;VISHWAKARMA UNIVERSITY, SURVEY NO 2 3, 4, KONDHWA MAIN RD, LAXMI NAGAR, BETAL NAGAR, KONDHWA, PUNE, MAHARASHTRA, 411048, India ~72: JADHAV, Balasaheb Bhausaheb;KHEDEKAR, Lokesh Sheshrao;WAKODE, Swarali Rahul;WANI, Kushal Ananda;WANKHADE, Shaunak Sunil;WARADE, Shreeyash Prakash~

2026/10316 ~ Complete ~54:A VIRTUAL REALITY-BASED SIMULATION SYSTEMS FOR FIREFIGHTING AND MULTI-HAZARD RESCUE ~71:VISHWAKARMA INSTITUTE OF TECHNOLOGY, 666, UPPER MARKET RD, UPPER INDIRA NAGAR, BIBWEWADI, PUNE, MAHARASHTRA, 411037, India;VISHWAKARMA UNIVERSITY, SURVEY NO 2 3, 4, KONDHWA MAIN RD, LAXMI NAGAR, BETAL NAGAR, KONDHWA, PUNE, MAHARASHTRA, 411048, India ~72: KUSHWAHA, Siddhartha Dhananjai;MAHALLE, Parikshit;MARATHE, Krishna Yuvraj;RAJPUT, Vaishali~

2026/10322 ~ Complete ~54:AN AUTONOMOUS EBPF-DRIVEN SYSTEM FOR RANSOMWARE DEFENSE AND RECOVERY IN KUBERNETES ~71:VISHWAKARMA INSTITUTE OF TECHNOLOGY, 666, UPPER MARKET RD, UPPER INDIRA NAGAR, BIBWEWADI, PUNE, MAHARASHTRA, 411037, India;VISHWAKARMA UNIVERSITY, SURVEY NO 2 3, 4, KONDHWA MAIN RD, LAXMI NAGAR, BETAL NAGAR, KONDHWA, PUNE, MAHARASHTRA, 411048, India ~72: AGARKAR, Shriraj Anant;AGRAWAL, Chetan Ramanlal;AGRAWAL, Manthan Pavan;GAIKWAD, Vidya Shrimant;KETKAR, Aryan Shripad~

2026/10328 ~ Complete ~54:CRYSTALLINE SALT FORMS OF AN AZITHROMYCIN BENZOATE DERIVATIVE ~71:EPIENDO PHARMACEUTICALS EHF, Bjargargata 1, REYKJAVIK 102 , ICELAND, Iceland ~72: HORKKA, Kaisa;TEODOROVIC, Peter~ 33:GB ~31:2404587.4 ~32:28/03/2024

2026/10340 ~ Complete ~54:RANDOM ACCESS FOR A-IOT DEVICE ~71:LENOVO (BEIJING) LIMITED, 6 Shangdi West Road Haidian District, Beijing, 100085, People's Republic of China ~72: HAN, Jing;HU, Jie;LIU, Luning;WANG, Haiming~

2026/10289 ~ Provisional ~54:REGISTRATION OF AN INDIVIDUAL ANIMAL UNDER A FRAMEWORK RECOGNISING IT AS A SUBJECT OF RIGHTS, AND ACTIONS ON ITS BEHALF CONDITIONED ON A FRESH BIOMETRIC MATCH AGAINST ITS REGISTRATION CREDENTIAL ~71:GELDENHUYS, Albertus Barend, Via Camana 3, Switzerland ~72: GELDENHUYS, Albertus Barend~

2026/10301 ~ Complete ~54:A DUAL-STREAM DEEP LEARNING SYSTEM FOR MULTI-CROP PLANT LEAF DISEASE DETECTION ~71:VISHWAKARMA INSTITUTE OF TECHNOLOGY, 666, UPPER MARKET RD, UPPER INDIRA NAGAR, BIBWEWADI, PUNE, MAHARASHTRA, 411037, India;VISHWAKARMA UNIVERSITY, SURVEY NO 2 3, 4, KONDHWA MAIN RD, LAXMI NAGAR, BETAL NAGAR, KONDHWA, PUNE,

MAHARASHTRA, 411048, India ~72: BOBADE, Sandip Yuvraj;DHOTRE, Virendrakumar Anna;JOSHI, Hrushikesh Jaiwant;KALE, Rashmi Bhaskarrao;LONDHE, Aoudumber Dattatray;MAHALLE, Parikshit Narendra;NAVALE, Geeta Sajjan;PISE, Ganesh Shivaji;RATHOD, Vijay Uttam;SABLE, Nilesh Popat~

2026/10315 ~ Complete ~54:AN INTEGRATED INNOVATION DEVELOPMENT SYSTEM WITH BI-DIRECTIONAL REVIEW AND SECURE AUDIT ~71:VISHWAKARMA INSTITUTE OF TECHNOLOGY, 666, UPPER MARKET RD, UPPER INDIRA NAGAR, BIBWEWADI, PUNE, MAHARASHTRA, 411037, India;VISHWAKARMA UNIVERSITY, SURVEY NO 2 3, 4, KONDHWA MAIN RD, LAXMI NAGAR, BETAL NAGAR, KONDHWA, PUNE, MAHARASHTRA, 411048, India ~72: CHOUDHARY, Rahul;DHEWALE, Nikhil;DHONGADE, Rohan;DODEJA, Kanishk;FUTANE, Pravin;GAVE, Prathamesh Gajanan;JADHAV, Varsha Damodhar~

2026/10326 ~ Complete ~54:PHOTOVOLTAIC DEVICE AND MANUFACTURING METHOD THEREFOR, PHOTOVOLTAIC MODULE, POWER GENERATING APPARATUS, AND ELECTRIC APPARATUS ~71:CONTEMPORARY AMPEREX TECHNOLOGY CO., LIMITED, No. 2 Xingang Road, Zhangwan Town, Jiaocheng District, People's Republic of China ~72: LIU, Xiao;XIE, Qiaowen~ 33:CN ~31:202411184275.5 ~32:27/08/2024

2026/10334 ~ Complete ~54:ROAD SECTION RISK ASSESSMENT METHOD AND SYSTEM ~71:CHINA HIGHWAY ENGINEERING CONSULTING GROUP CO., LTD., 2nd Floor, Building 2, No. A1 & No.3 Qinglong Hutong Dongcheng District, People's Republic of China;TECH TRAFFIC ENGINEERING GROUP CO., LTD., Room 806, Haitai Building, Zhixin Village Community Haidian District, People's Republic of China ~72: AN, Zeping;HE, Jing;JIA, Peiyuan;PENG, Min;WANG, Bo;ZHANG, Zhihong;ZHAO, Jing~ 33:CN ~31:202610655044.0 ~32:13/05/2026

2026/10343 ~ Complete ~54:VEHICLE TRAVELING CONTROL METHOD BASED ON FLOODED ROAD SURFACE, AND RELATED APPARATUS ~71:CHERY AUTOMOBILE CO., LTD., No. 8, Changchun Road, Economy & Technology Development Zone, Wuhu, 241006, Anhui, People's Republic of China ~72: HUANG, Minkai;LI, Jia;YUAN, Xiaohan~ 33:CN ~31:202510249829.3 ~32:04/03/2025

2026/10280 ~ Provisional ~54:THE CURVE RANGE OF SKILLET AND POT SET ~71:Nicholas Acker SMIT, 11 ABIEWA CRESCENT, South Africa ~72: Nicholas Acker SMIT~

2026/10284 ~ Provisional ~54:A VERIFICATION SYSTEM ~71:VAN ROOYEN, Marthinus, Jan, 106B FRANS OERDER STREET, GROENKLOOF, PRETORIA, 0181, SOUTH AFRICA, South Africa ~72: VAN ROOYEN, Marthinus, Jan~

2026/10287 ~ Provisional ~54:BINDING A LATER MOLECULAR RESULT TO THE IDENTITY RECORD OF AN INDIVIDUAL ANIMAL ~71:GELDENHUYS, Albertus Barend, Via Camana 3, Switzerland ~72: GELDENHUYS, Albertus Barend~

2026/10297 ~ Provisional ~54:OUTLET ADAPTOR ~71:HENDRO VISSER, 4 PARK VIEW CLOSE, South Africa ~72: HENDRO VISSER~

2026/10299 ~ Complete ~54:INTERNAL SHAFT FOR A ROTARY UNION ~71:CONAX MACHINE SOLUTIONS (PTY) LIMITED, 108 Industry Road, New Era, South Africa ~72: JOHANNES JACOBUS NAUDE~

2026/10303 ~ Complete ~54:A BIO-MARKER DRIVEN ASYMMETRIC CRYPTOGRAPHIC SCALING SYSTEM FOR EMERGENCY ISOCHRONOUS OFFLOADING IN IOMT NETWORKS ~71:VISHWAKARMA INSTITUTE OF TECHNOLOGY, 666, UPPER MARKET RD, UPPER INDIRA NAGAR, BIBWEWADI, PUNE, MAHARASHTRA, 411037, India;VISHWAKARMA UNIVERSITY, SURVEY NO 2 3, 4, KONDHWA MAIN RD, LAXMI NAGAR,

BETAL NAGAR, KONDHWA, PUNE, MAHARASHTRA, 411048, India ~72: CHAUDHARI, Prasad;GUPTA, Diksha Rakesh;SURYAWANSHI, Amol Shivajirao~

2026/10305 ~ Complete ~54:AN IOT BASED FLOOD MONITORING AND ALERT SYSTEM ~71:VISHWAKARMA INSTITUTE OF TECHNOLOGY, 666, UPPER MARKET RD, UPPER INDIRA NAGAR, BIBWEWADI, PUNE, MAHARASHTRA, 411037, India;VISHWAKARMA UNIVERSITY, SURVEY NO 2 3, 4, KONDHWA MAIN RD, LAXMI NAGAR, BETAL NAGAR, KONDHWA, PUNE, MAHARASHTRA, 411048, India ~72: DANE, Bhausaheb;RAMPURKAR, Shreyash Dnyaneshwar;RANA, Aashlesha Ujjwal;RANGARI, Samiksha Bhaiyya;RANKHAMBE, Yashraj Uttam~

2026/10310 ~ Complete ~54:AN INTELLIGENT CUSTOMER RETENTION PREDICTION SYSTEM USING END-TO-END MLOPS PIPELINE ~71:VISHWAKARMA INSTITUTE OF TECHNOLOGY, 666, UPPER MARKET RD, UPPER INDIRA NAGAR, BIBWEWADI, PUNE, MAHARASHTRA, 411037, India;VISHWAKARMA UNIVERSITY, SURVEY NO 2 3, 4, KONDHWA MAIN RD, LAXMI NAGAR, BETAL NAGAR, KONDHWA, PUNE, MAHARASHTRA, 411048, India ~72: KAMBLE, Tejas;KODMEKWAR, Manohar K.;KOLTE, Vaishnavi;PATIL, Swati Bula;SHINGATE, Ayush;VYAS, Amey~

2026/10311 ~ Complete ~54:AN ARTIFICIAL INTELLIGENCE BASED CUSTOM TRAVEL ITINERARY PLANNING SYSTEM USING ARTIFICIAL INTELLIGENCE ~71:VISHWAKARMA INSTITUTE OF TECHNOLOGY, 666, UPPER MARKET RD, UPPER INDIRA NAGAR, BIBWEWADI, PUNE, MAHARASHTRA, 411037, India;VISHWAKARMA UNIVERSITY, SURVEY NO 2 3, 4, KONDHWA MAIN RD, LAXMI NAGAR, BETAL NAGAR, KONDHWA, PUNE, MAHARASHTRA, 411048, India ~72: DUKARE, Kuldeep;FUTANE, Pravin;GAWANDE, Ayushi;GAWANDE, Srushti;GOPALE, Smital;JADHAV, Varsha Damodhar~

2026/10318 ~ Complete ~54:A SMART CONTRACT VULNERABILITY DETECTION SYSTEM WITH SEMANTIC ANALYSIS AND CRYPTOGRAPHIC VERIFICATION ~71:VISHWAKARMA INSTITUTE OF TECHNOLOGY, 666, UPPER MARKET RD, UPPER INDIRA NAGAR, BIBWEWADI, PUNE, MAHARASHTRA, 411037, India;VISHWAKARMA UNIVERSITY, SURVEY NO 2 3, 4, KONDHWA MAIN RD, LAXMI NAGAR, BETAL NAGAR, KONDHWA, PUNE, MAHARASHTRA, 411048, India ~72: GAIKWAD, Vidya Shrimant;KHARATE, Om Shravan;KHATAL, Ayush Satish;KHEDKAR, Samarth Shivaji;MUKDAM, Kaustubh Devidas~

2026/10325 ~ Complete ~54:A FUSIDIC ACID GEL WITH CHITOSAN AND HYDROLYZED COLLAGEN FOR TREATMENT OF DIABETIC ULCERS AND A PROCESS OF MAKING IT ~71:APEX LABORATORIES PRIVATE LIMITED, 3rd floor, SIDCO Garment Complex, India ~72: SRINIVASAN, Madhavan;SULUR, SUBRAMANIAM, Vanangamudi;SULUR, VANANGAMUDI, Vishagan~ 33:IN ~31:202441047868 ~32:21/06/2024

2026/10330 ~ Complete ~54:TREATING CHRONIC KIDNEY DISEASE WITH A COMBINATION OF SLC6A19 AND SGLT2 INHIBITORS ~71:JNANA THERAPEUTICS INC., One Design Center Place, Suite 19-400, BOSTON 02210, MA, USA, United States of America ~72: BROWN, Dean G.;VIADER, Andreu;VRATSANOS, George;WOBST, Heike Julia~ 33:US ~31:63/633,420 ~32:12/04/2024

2026/10338 ~ Complete ~54:RACH OCCASION GROUP FOR PREAMBLE REPETITIONS ~71:LENOVO (BEIJING) LIMITED, 6 Shangdi West Road Haidian District, Beijing, 100085, People's Republic of China ~72: LIU, Hongmei;MA, Ruixiang;YAN, Zhi;ZHANG, Yuantao~

2026/10282 ~ Provisional ~54:CUPSOL HINGE REPAIR ON CARCASS ~71:FRANS JOOSTE, 8 LADY SMITH STREET, South Africa ~72: FRANS JOOSTE~

2026/10285 ~ Provisional ~54:A HAT ~71:BUDDEN, Wayne Lance, Portion 45, Farm Uitzicht 216, Brenton Road, Belvidere, Knysna, 6570, SOUTH AFRICA, South Africa ~72: BUDDEN, Wayne Lance~

2026/10292 ~ Provisional ~54:ATTESTATION OF IDENTITY EVIDENCE DERIVED FROM RECONSTRUCTED MOTION ~71:GELDENHUYS, Albertus Barend, Via Camana 3, Switzerland ~72: GELDENHUYS, Albertus Barend~

2026/10295 ~ Provisional ~54:HEARING PROTECTION DEVICE WITH WEARING STATUS MONITORING ~71:Noise Clipper (Pty) Ltd., 2 Hotel Street, Persequor Park, Lynnwood, PRETORIA 0020, Gauteng, SOUTH AFRICA, South Africa ~72: LINDEQUE, Wynand~

2026/10306 ~ Complete ~54:AN AI POWERED CROP RECOMMENDATION AND FARMING INTELLIGENCE SYSTEM ~71:VISHWAKARMA INSTITUTE OF TECHNOLOGY, 666, UPPER MARKET RD, UPPER INDIRA NAGAR, BIBWEWADI, PUNE, MAHARASHTRA, 411037, India;VISHWAKARMA UNIVERSITY, SURVEY NO 2 3, 4, KONDHWA MAIN RD, LAXMI NAGAR, BETAL NAGAR, KONDHWA, PUNE, MAHARASHTRA, 411048, India ~72: DANE, Bhausaheb Punaji;PANDE, Varad Shashank;PANHALE, Omkar Raju;PANSHETTI, Pushkar Rajshekhar;PATHAK, Gauri Vinod;PATHAN, Akbar Asifkhan~

2026/10309 ~ Complete ~54:AN AI-BASED FIRE STATION LOCATION OPTIMIZATION SYSTEM FOR MAXIMUM URBAN COVERAGE IN MINIMUM EMERGENCY RESPONSE TIME ~71:VISHWAKARMA INSTITUTE OF TECHNOLOGY, 666, UPPER MARKET RD, UPPER INDIRA NAGAR, BIBWEWADI, PUNE, MAHARASHTRA, 411037, India;VISHWAKARMA UNIVERSITY, SURVEY NO 2 3, 4, KONDHWA MAIN RD, LAXMI NAGAR, BETAL NAGAR, KONDHWA, PUNE, MAHARASHTRA, 411048, India ~72: JOSHI, Swati;KHAN, Omar;KURKURE, Kushal Atul;MAHALLE, Parikshit;PADOLE, Vedant Vipul;PARIDA, Smrutikant Dhirendra;PATIL, Omkar Niwas;RAJPUT, Vaishali;SARODE, Paras Umesh~

2026/10312 ~ Complete ~54:A PELTIER-BASED CPU THERMAL MANAGEMENT SYSTEM ~71:VISHWAKARMA INSTITUTE OF TECHNOLOGY, 666, UPPER MARKET RD, UPPER INDIRA NAGAR, BIBWEWADI, PUNE, MAHARASHTRA, 411037, India;VISHWAKARMA UNIVERSITY, SURVEY NO 2 3, 4, KONDHWA MAIN RD, LAXMI NAGAR, BETAL NAGAR, KONDHWA, PUNE, MAHARASHTRA, 411048, India ~72: CHOPDE, Abhay Madhuka;KUMAWAT, Toshal Ajay;KUNGHATKAR, Parth Gopalrao;METKAR, Soham Sachin~

2026/10320 ~ Complete ~54:A HYBRID ATTENTION-DRIVEN LIGHTWEIGHT CONVOLUTIONAL NEURAL NETWORK (HAD-LCNN) BASED SYSTEM FOR REAL-TIME MULTI-CROP PLANT DISEASE DETECTION ~71:VISHWAKARMA INSTITUTE OF TECHNOLOGY, 666, UPPER MARKET RD, UPPER INDIRA NAGAR, BIBWEWADI, PUNE, MAHARASHTRA, 411037, India;VISHWAKARMA UNIVERSITY, SURVEY NO 2 3, 4, KONDHWA MAIN RD, LAXMI NAGAR, BETAL NAGAR, KONDHWA, PUNE, MAHARASHTRA, 411048, India ~72: BOBADE, Sandip Yuvraj;DHOTRE, Virendrakumar Anna;JOSHI, Hrushikesh Jaiwant;KALE, Rashmi Bhaskarrao;LONDHE, Aoudumber Dattatray;MAHALLE, Parikshit Narendra;NAVALE, Geeta Sajjan;PISE, Ganesh Shivaji;RATHOD, Vijay Uttam;SABLE, Nilesh Popat~

2026/10323 ~ Complete ~54:AN ADAPTIVE ENVIRONMENTAL CONTROL SYSTEM FOR IOT-BASED VERTICAL GARDENS ~71:VISHWAKARMA INSTITUTE OF TECHNOLOGY, 666, UPPER MARKET RD, UPPER INDIRA NAGAR, BIBWEWADI, PUNE, MAHARASHTRA, 411037, India;VISHWAKARMA UNIVERSITY, SURVEY NO 2 3, 4, KONDHWA MAIN RD, LAXMI NAGAR, BETAL NAGAR, KONDHWA, PUNE, MAHARASHTRA, 411048, India ~72: GAIKWAD, Vidya Shrimant;GAWADE, Pranav Balasaheb;GENGE, Kirti ANANDA;GHARDE, Yatharth Yogesh;GHORPADE, Shruti Sudhakar~

2026/10331 ~ Complete ~54:TREATING CHRONIC KIDNEY DISEASE WITH A COMBINATION OF A SLC6A19 INHIBITOR AND A GLP-1 AGONIST ~71:JNANA THERAPEUTICS INC., One Design Center Place, Suite 19-400, BOSTON 02210, MA, USA, United States of America ~72: BROWN, Dean G.;VIADER, Andreu;VRATSANOS, George;WOBST, Heike Julia~ 33:US ~31:63/633,423 ~32:12/04/2024

2026/10337 ~ Complete ~54:TECHNIQUES FOR INDIRECT NETWORK SHARING ~71:LENOVO (SINGAPORE) PTE. LTD., 151, Lorong Chuan #02-01, New Tech Park, Singapore, 556741, Singapore ~72: VELEV, Genadi~ 33:US ~31:18/667,865 ~32:17/05/2024

2026/10344 ~ Complete ~54:OFFSHORE WIND PLATFORM WITH FOLDING RADIAL BRACES ~71:MARINE POWER SYSTEMS LIMITED, The Warehouse Building, Urban Village, United Kingdom ~72: BENZIE, Jonathan Ian;FOSTER, Graham David;HENDERSON, Ross McKay;TAYLOR, Charles Andrew Edward;YEMM, Richard William~ 33:GB ~31:2408275.2 ~32:10/06/2024

2026/10279 ~ Provisional ~54:A FUNGAL BIOLOGICAL HERBICIDE AND METHODS OF MANUFACTURE AND USE THEREOF ~71:BLUM BIOLOGICALS (PTY) Ltd, 89 Foundry Street,, South Africa ~72: FORD, Stephen~

2026/10288 ~ Provisional ~54:ATTESTED IDENTITY EVIDENCE FROM DISTRIBUTED SENSING ON AN OPTICAL FIBRE ~71:GELDENHUYS, Albertus Barend, Via Camana 3, Switzerland ~72: GELDENHUYS, Albertus Barend~

2026/10294 ~ Provisional ~54:WATER-ADMINISTRABLE SUPPLEMENT FOR MONOGASTRIC LIVESTOCK ~71:BES TECHNIK (PTY) LTD, Midstream Hill Erf 3924, 28 Marmolade Crescent, Gauteng, South Africa ~72: CROTS, Francois~

2026/10298 ~ Provisional ~54:A COVERT MULTI-SENSOR SYSTEM AND METHOD FOR DETECTING INTRUSION INTO, AND THEFT OF, BURIED CABLE AND INFRASTRUCTURE ~71:Blaq Packer (Pty) Ltd, 3rd Birds Street, South Africa ~72: CWAITA NOBONGOZA;Linford Musiyambodza~

2026/10300 ~ Complete ~54:A REAL-TIME MACHINE LEARNING BASED CREDIT CARD FRAUD DETECTION AND RISK ASSESSMENT SYSTEM ~71:VISHWAKARMA INSTITUTE OF TECHNOLOGY, 666, UPPER MARKET RD, UPPER INDIRA NAGAR, BIBWEWADI, PUNE, MAHARASHTRA, 411037, India;VISHWAKARMA UNIVERSITY, SURVEY NO 2 3, 4, KONDHWA MAIN RD, LAXMI NAGAR, BETAL NAGAR, KONDHWA, PUNE, MAHARASHTRA, 411048, India ~72: AGRAWAL, Suvan Vinodkumar;DESHMUKH, Adwait Nitin;PATIL, Swati Bula;RATHI, Snehal Rahul;THALKARI, Shree Rajendra~

2026/10307 ~ Complete ~54:A HYBRID CNN-VIT FRAMEWORK WITH DUAL ATTENTION FOR MULTI-CLASS SUGARCANE LEAF DISEASE CLASSIFICATION ~71:VISHWAKARMA INSTITUTE OF TECHNOLOGY, 666, UPPER MARKET RD, UPPER INDIRA NAGAR, BIBWEWADI, PUNE, MAHARASHTRA, 411037, India;VISHWAKARMA UNIVERSITY, SURVEY NO 2 3, 4, KONDHWA MAIN RD, LAXMI NAGAR, BETAL NAGAR, KONDHWA, PUNE, MAHARASHTRA, 411048, India ~72: BOBADE, Sandip Yuvraj;DHOTRE, Virendrakumar Anna;JOSHI, Hrushikesh Jaiwant;KALE, Rashmi Bhaskarrao;LONDHE, Aoudumber Dattatray;MAHALLE, Parikshit Narendra;NAVALE, Geeta Sajjan;PISE, Ganesh Shivaji;RATHOD, Vijay Uttam;SABLE, Nilesh Popat~

2026/10314 ~ Complete ~54:A MULTI-MODAL VISION PROCESSING BASED ASSISTIVE CAP SYSTEM FOR THE VISUALLY IMPAIRED ~71:VISHWAKARMA INSTITUTE OF TECHNOLOGY, 666, UPPER MARKET RD, UPPER INDIRA NAGAR, BIBWEWADI, PUNE, MAHARASHTRA, 411037, India;VISHWAKARMA UNIVERSITY, SURVEY NO 2 3, 4, KONDHWA MAIN RD, LAXMI NAGAR, BETAL NAGAR, KONDHWA, PUNE, MAHARASHTRA, 411048, India ~72: DESHMUKH, Pruthviraj Prashant;GAMBHIRE, Pranav Sanjay;GORDE, Pranav Gorakshnath;JADHAV, Prajyot Pandharinath;MAHAJAN, Chandrashekhar Madhavrao;PATIL, Pranav Hansraj;PATIL, Prerna Nilkanth;SHAHA, Pranav Raju~

2026/10319 ~ Complete ~54:AN AI-POWERED PPE COMPLIANCE GATE SYSTEM FOR CONSTRUCTION SITE SAFETY USING COMPUTER VISION AND IOT ~71:VISHWAKARMA INSTITUTE OF TECHNOLOGY, 666, UPPER MARKET RD, UPPER INDIRA NAGAR, BIBWEWADI, PUNE, MAHARASHTRA, 411037,

India;VISHWAKARMA UNIVERSITY, SURVEY NO 2 3, 4, KONDHWA MAIN RD, LAXMI NAGAR, BETAL NAGAR, KONDHWA, PUNE, MAHARASHTRA, 411048, India ~72: AGARKAR, AARTI;MULIK, SUPRIYA DNYANESHWAR;THOPATE, KAUSHALYA~

2026/10324 ~ Complete ~54:FORWARD ERROR CORRECTION IN DIGITAL COMMUNICATION SYSTEMS ~71:STELLENBOSCH UNIVERSITY, Admin B, Victoria Street, Stellenbosch, South Africa ~72: DU PREEZ, Johan Adam;DU TOIT, Frederick Jacobus~ 33:GB ~31:2405561.8 ~32:19/04/2024

2026/10329 ~ Complete ~54:GENETICALLY ENGINEERED CELLS ~71:VERTEX PHARMACEUTICALS INCPORPORATED, 50 Northern Avenue, BOSTON 02210, MA, USA, United States of America ~72: CONWAY, Michael;COOKE, Michael;IMANI, Jewel;KISSLER, Stephan~ 33:US ~31:63/640,371 ~32:30/04/2024;33:US ~31:63/735,831 ~32:18/12/2024

2026/10332 ~ Complete ~54:POWER CONTROL SYSTEM, METHOD OF CONTROLLING POWER CONSUMPTION OF AN INDUSTRIAL VEHICLE CONNECTED TO A POWER SUPPLY INSTALLATION, AND USE OF THE POWER CONTROL SYSTEM ~71:ABB SCHWEIZ AG, Bruggerstrasse 66, BADEN 5400, SWITZERLAND, Switzerland ~72: ASTRAND, Max;CARVALHO, Neandro;DITTAKAVI, Ratna-Kanth;SCHLEGEL, Christoph~

2026/10336 ~ Complete ~54:METHODS AND APPARATUSES FOR AN L1/L2-TRIGGERED MOBILITY (LTM) PROCEDURE AND A CONDITIONAL HANDOVER (CHO) PROCEDURE ~71:LENOVO (BEIJING) LIMITED, 6 Shangdi West Road Haidian District, Beijing, 100085, People's Republic of China ~72: WU, Lianhai;YAN, Le;YANG, Shuigen~

2026/10339 ~ Complete ~54:AI/ML-BASED CSI COMPRESSION ~71:LENOVO (BEIJING) LIMITED, 6 Shangdi West Road Haidian District, Beijing, 100085, People's Republic of China ~72: LIU, Bingchao;WANG, Jianfeng;ZHANG, Congchi~

2026/10341 ~ Complete ~54:DATA FORWARDING FOR LTM ~71:LENOVO (BEIJING) LIMITED, 6 Shangdi West Road Haidian District, Beijing, 100085, People's Republic of China ~72: DAI, Mingzeng;WU, Lianhai;YANG, Shuigen;ZHANG, Congchi~

2026/10345 ~ Complete ~54:MODULAR PLATFORM ~71:MARINE POWER SYSTEMS LIMITED, The Warehouse Building, Urban Village, United Kingdom ~72: FOSTER, Graham~ 33:GB ~31:2408277.8 ~32:10/06/2024

. - APPLIED ON 2026/10/28 -

2026/10352 ~ Provisional ~54:GLOBAL DIGITAL VALUE EXCHANGE PROTOCOL AND SYSTEM FOR VERIFIED VALUATION ATTESTATION AND CROSS BORDER TRADING OF PHYSICAL AND DIGITAL ASSETS AND LABOR AND CONSUMER AND INVESTMENT CONTRIBUTIONS USING VALUE SCORES - PREMIUM HIGH PERFORMANCE AND FULL CIRCULAR FLOW PROTOCOL ~71:Makhado Nkhumeleni Rodney, 623 Tshaulu Tshilaphala, South Africa ~72: Makhado Nkhumeleni Rodney~ 33:ZA ~31:2026/10068 ~32:20/10/2026;33:ZA ~31:2026/10235 ~32:26/10/2026

2026/10363 ~ Complete ~54:AN ADAPTIVE LEVELING CHASSIS FOR A JUJUBE HARVESTER ~71:Xinjiang Polytechnic Institute, No. 1, Huanghe Road, Economic New Zone, Hotan County, Hotan Prefecture, Xinjiang Uygur Autonomous Region, People's Republic of China ~72: Chen Fengtian;Chen Huajun;Ding Huizhe;Luo Yuqian;Ni Xiangdong;Sun Hongtao;Wang Yinghao;Xiang Zhen;Zhang Xiantong;Zhou Mengxi~ 33:CN ~31:2026105292776 ~32:21/04/2026

2026/10369 ~ Complete ~54:CHISEL HOLDER ~71:WIRTGEN GMBH, REINHARD-WIRTGEN-STR. 2, 53578 WINDHAGEN, GERMANY, Germany ~72: BUHR, Karsten;JOST, Andreas;SPÖTH, Sascha;WILHELMI, Hardy~ 33:DE ~31:10 2024 112 594.2 ~32:06/05/2024

2026/10377 ~ Complete ~54:DEVICES, METHODS, APPARATUSES, AND COMPUTER READABLE MEDIA FOR CELL MODE DETERMINATION ~71:NOKIA TECHNOLOGIES OY, KARAKAARI 7, 02610 ESPOO, FINLAND, Finland ~72: KOSKELA, Jarkko, Tuomo;LASELVA, Daniela;SAYED HASSAN, Mohamad~ 33:GB ~31:2404817.5 ~32:04/04/2024

2026/10390 ~ Complete ~54:ANTIBODIES TARGETING DLL3 AND ANTIBODY-DRUG CONJUGATES AND USES THEREOF ~71:FORTVITA BIOLOGICS (SINGAPORE) PTE. LTD., 38 Beach Road, #29-11 South Beach Tower, SINGAPORE 189767, SINGAPORE, Singapore ~72: FENG, Ye;LI, Li;WU, Weiwei;ZHOU, Shuaixiang~ 33:CN ~31:202410532577.0 ~32:29/04/2024;33:CN ~31:202411794542.0 ~32:06/12/2024

2026/10394 ~ Complete ~54:FORMULATIONS OF MNK INHIBITORS ~71:4E THERAPEUTICS, INC., 3800 N. Lamar Blvd., Suite 200, AUSTIN 78756, TX, USA, United States of America ~72: CASTELHANO, Arlindo Lucas;SMITH, Garry Robert;TUOHY III, Robert Vincent;UDE, Chukwuma Maximillian~ 33:US ~31:63/664,407 ~32:26/06/2024

2026/10398 ~ Complete ~54:WATCH CLASP, WATCHBAND, AND WEARABLE DEVICE ~71:HUAWEI TECHNOLOGIES CO., LTD., Huawei Administration Building, Bantian, People's Republic of China ~72: CHENG, Tianyu;TIAN, Guoqiang;YUAN, Shenglan;ZHANG, Lei;ZHOU, Hua~ 33:CN ~31:202410672447.7 ~32:27/05/2024

2026/10400 ~ Complete ~54:OVERFLOW COLLECTION LAUNDER ARRANGEMENT AND SEPARATION CIRCUIT ~71:METSO FINLAND OY, Rauhalanpuisto 9, Finland ~72: KEMPPAINEN, Janne;MIETTINEN, Tatu;TÄHKIÖ, Pekka~ 33:FI ~31:20245574 ~32:08/05/2024

2026/10409 ~ Complete ~54:LEPTIN COMPOSITIONS AND METHODS OF MAKING AND USING THE SAME TO SUPPORT WEIGHT LOSS AND/OR MAINTENANCE ~71:LUMEN BIOSCIENCE, INC., 1441 North 34th Street, Suite 300, United States of America ~72: BOLICK, David;DODDS, Michael;FINROW, Brian;GEWE, Mesfin Mulugeta;HEINNICKEL, Mark;KHUONG, Nhi Yen;LAU, Uland;ROBERTS, James Michael;TABAKH, Hannah;WIERMAN, Jennifer Lynn~ 33:US ~31:63/646,354 ~32:13/05/2024

2026/10411 ~ Complete ~54:ROVER UNIT FOR CLEANING SYSTEM INSTALLED ON SUCTION AND JETTING TRUCK AND TRUCK THEREOF ~71:GENROBOTIC INNOVATIONS PRIVATE LIMITED, L/50, Building No: 980, Kanjiramchira P.O, India ~72: JALEESH, P;NIKHIL, NP;SUJODH, K;VIMAL GOVIND, MK~ 33:IN ~31:202441025530 ~32:28/03/2024

2026/10347 ~ Provisional ~54:A ROLE-ADAPTIVE, LOCK-AWARE, TWO-PART-AWARE DIGITAL WALLET WITH SETTLEMENT ACCOUNT BRIDGE, TAX CALCULATION ENGINE, COLLATERAL MANAGEMENT, SECONDARY MARKET INTERFACE, AND REGULATORY REPORTING FOR A LOCKED RETIREMENT TOKEN SYSTEM ~71:Mfumelo Blessing Kolela, Laudium, South Africa ~72: Mfumelo Blessing Kolela~

2026/10356 ~ Provisional ~54:COMPOUNDS FOR TREATMENT OF LIVER CANCER ~71:HARARE INSTITUTE OF PUBLIC HEALTH, 70 Parklane, Harare 00263, ZIMBABWE, Zimbabwe;UNIVERSITY OF JOHANNESBURG, Cnr Kingsway Avenue and University Road, Auckland Park, JOHANNESBURG 2006, SOUTH AFRICA, South Africa;UNIVERSITY OF THE WITWATERSRAND, JOHANNESBURG, 1 Jan Smuts Avenue, Braamfontein, 2001, SOUTH AFRICA, South Africa ~72: DARE, Cheyann;MARUME, Amos;MUKWEMBI, Simon;MUTINGWENDE, Isaac;NYABADZA, Farai;VAN DER MERWE, Eloise;ZHANGAZHA, Moster~

2026/10370 ~ Complete ~54:METHOD AND APPARATUS FOR COMMUNICATION OF IOT DEVICE ~71:TELEFONAKTIEBOLAGET LM ERICSSON (PUBL), SE-164 83 STOCKHOLM, SWEDEN, Sweden ~72: HEDMAN, Peter;LING, Jie;PHAM VAN, Dung;SINGH, Bikramjit;WANG, Min;ZHANG, Zhang~ 33:CN ~31:PCT/CN2024/086266 ~32:05/04/2024

2026/10376 ~ Complete ~54:METHOD OF DETERMINING MEASUREMENT REQUIREMENTS ON HIGHER PRIORITY CARRIERS ~71:NOKIA TECHNOLOGIES OY, KARAKAARI 7, 02610 ESPOO, FINLAND, Finland ~72: CHA, Hyun-Su;HOFMANN, Jürgen;LEE, Gilsoo~ 33:GB ~31:2404793.8 ~32:04/04/2024

2026/10404 ~ Complete ~54:PRESSURIZED SYSTEM WARNING ATTACHMENT ~71:CIJ ENGINEERED PTY LTD, 1 Hahesy Circuit, Roseworthy, South Australia, 5371, Australia ~72: CUNNINGHAM, Gavin;ZAMMIT, Jarrad~ 33:AU ~31:2024900894 ~32:02/04/2024

2026/10346 ~ Provisional ~54:A DIGITAL TOKEN MANAGEMENT SYSTEM WITH LOCK-UP MODULE, TWO-PART TOKEN STRUCTURE, COLLATERALIZED LOAN MECHANISM, CONFIGURABLE PAYOUT FRAMEWORK, DUAL ENFORCEMENT, PROOF OF ORIGIN, RECOVERY, ROLE-ADAPTIVE INTERFACE, PERMISSION MATRIX, SETTLEMENT BRIDGE, AND SECONDARY MARKET ARCHITECTURE FOR LOCKED RETIREMENT SAVINGS ~71:Mfumelo Blessing Kolela, Laudium, South Africa ~72: Mfumelo Blessing Kolela~

2026/10358 ~ Provisional ~54:CONTROLLABLE, GAPLESS IRON CORE REACTOR ~71:Jacobus Johannes van der Merwe, 1060 Pierneef Street, Villieria, South Africa ~72: Jacobus Johannes van der Merwe~

2026/10362 ~ Complete ~54:METHOD FOR ENHANCING SHORT-PROCESS FLOTATION RECOVERY OF FINE CASSITERITE USING AN ACRYLIC ACID-SODIUM VINYLSULFONATE COPOLYMER POLYMER REGULATOR ~71:Kunming University of Science and Technology, No.727 Jingming South Road, Chenggong District, Kunming City, Yunnan Province, 650031, People's Republic of China ~72: CHEN Guangpeng;HUANG Shan;LIU Jian;WANG Ye;ZHAO Guoliang~ 33:CN ~31:2026114979829 ~32:24/09/2026

2026/10374 ~ Complete ~54:CHISEL HOLDER ~71:WIRTGEN GMBH, REINHARD-WIRTGEN-STR. 2, 53578 WINDHAGEN, GERMANY, Germany ~72: BUHR, Karsten;JOST, Andreas;SPÖTH, Sascha;WILHELMI, Hardy~ 33:DE ~31:10 2024 112 598.5 ~32:06/05/2024

2026/10379 ~ Complete ~54:VHH ANTIBODIES WHICH BIND TO CANINE IL-31 ~71:272BIO LIMITED, The Gateway Building, Collegiate Square, Shinfield, United Kingdom ~72: BERTELLI, François;KAMBLE, Nitin;OWEN, Charles E.;RANDALL, Thomas;SCHADE-WESKOTT, Mathilde~ 33:GB ~31:2405576.6 ~32:19/04/2024

2026/10389 ~ Complete ~54:ANG2/VEGF BISPECIFIC BINDING MOLECULES ~71:SHENZHEN OCULGEN BIOMEDICAL TECHNOLOGY CO., LTD, Room 1201, Yihua Financial Technology Building, No. 3939 Baishi Road, Binhai Community, Yuehai Sub-District, Nanshan District, SHENZHEN 518057, GUANGDONG, CHINA (P.R.C.), People's Republic of China ~72: CHEN, Chiungkuang~ 33:IB ~31:2024/090632 ~32:29/04/2024

2026/10397 ~ Complete ~54:SELF-ADJUSTING ELECTRIC PARK BRAKE ASSEMBLY ~71:EUROSPARES DEPOT HOLDINGS PTY LTD, 62 Indian Drive, Australia ~72: Steven Peter ALTAIR~ 33:AU ~31:2024901129 ~32:22/04/2024

2026/10402 ~ Complete ~54:PLANTS WITH IMPROVED AGRONOMIC CHARACTERISTICS THROUGH INCREASED EXPRESSION OF THE APC7 GENE ~71:HAPISEEDS PESQUISA E DESENVOLVIMENTO LTDA, Rua Hélio de Almeida, s/n°, Incubadora de empresas COPPE/UFRJ, Prédio 1, Cidade Universitária 21941-614 Rio de Janeiro RJ, Brazil;UNIVERSIDADE FEDERAL DO RIO DE JANEIRO, Rua Aloísio Teixeira, 278 - Prédio 2,

Ilha da Cidade Universitária 21941-850 Rio de Janeiro - RJ, Brazil ~72: CARDOZO ROSMAN, Aline;DA FONSECA MONTESSORO, Patrícia;DE ARAÚJO LOPES, Bruna Gino;KÖHN CARNEIRO, Aline;SILVA COELHO, Fernanda;SILVA HEMERLY, Adriana;THIEBAUT ANDRADE ZANON BARROSO, Flávia~ 33:BR ~31:1020240067827 ~32:05/04/2024

2026/10407 ~ Complete ~54:STAPLED PEPTIDE PROTEOLYSIS TARGETING CHIMERAS (SP-PROTACS) AND METHODS OF USE ~71:DANA-FARBER CANCER INSTITUTE, INC., 450 Brookline Avenue, Boston, Massachusetts, 02215-5450, United States of America ~72: BIRD, Gregory H;WALENSKY, Loren D~ 33:US ~31:63/650,785 ~32:22/05/2024

2026/10351 ~ Provisional ~54:STRAP-ON TANK HUB ~71:Dietmar Albert Pahl, 30 Collingwood Street, Kensington, South Africa ~72: Dietmar Albert Pahl~

2026/10353 ~ Provisional ~54:INTELLIGENT INDUCTION COOKING ARRANGEMENT WITH IDENTIFIABLE INTERCHANGEABLE COOKING VESSELS ~71:Waldemar SCHWARZ, 7 EAGLES AYRE SCOTT STREET CAMPERDOWN, South Africa ~72: Waldemar SCHWARZ~

2026/10357 ~ Provisional ~54:HOUSEHOLD WATER PURIFICATION SYSTEM WITH ROTATABLE CONTAINER ARCHITECTURE AND MODULAR FILTRATION EMBODIMENTS ~71:MATINOVA (Ptv) Ltd, 664 Section F, South Africa ~72: Thato Mtungwa~

2026/10359 ~ Complete ~54:PERISHABLE PRODUCT SPOILAGE INDICATOR ~71:SCHOLTZ, Johannes Jacobus Lodewicus, 239 Tulip Rd, Mnandi AH, South Africa ~72: SCHOLTZ, Johannes Jacobus Lodewicus~ 33:ZA ~31:2025/06749 ~32:13/08/2026

2026/10364 ~ Complete ~54:A SLIDING SUPPORT STRUCTURE FOR LONG-SPAN SPATIAL GRID STRUCTURES ~71:Henan University of Urban Construction, Longxiang Avenue, Xincheng District, Pingdingshan City, Henan Province, People's Republic of China ~72: Cui Yanwei;Guo Weiwei;Li Jiangle;MAN Yuan;SHI Luke;Yin Xiaojing~

2026/10367 ~ Complete ~54:SILICON-CERAMIC INSERTS IN GRINDING WEAR PARTS ~71:GEBR. PFEIFFER SE, BARBAROSSA-STRAßE 50 - 54, 67655 KAISERSLAUTERN, GERMANY, Germany ~72: FRANKENBERGER, Ralf;HENKEL, Jens;HOFFMANN, Dirk~ 33:EP ~31:24168079.2 ~32:02/04/2024

2026/10373 ~ Complete ~54:SILICON-CERAMIC INSERTS IN GRINDING WEAR PARTS ~71:GEBR. PFEIFFER SE, BARBAROSSA-STRAßE 50 - 54, 67655 KAISERSLAUTERN, GERMANY, Germany ~72: FRANKENBERGER, Ralf;HENKEL, Jens;HOFFMANN, Dirk~ 33:EP ~31:24168081.8 ~32:02/04/2024

2026/10393 ~ Complete ~54:NOVEL COMPOUNDS AS CYCLIC GMP-AMP SYNTHASE INHIBITOR AND USES THEREOF ~71:INSILICO MEDICINE IP LIMITED, 26th Floor, Three Exchange Square, 8 Connaught Place Central, HONG KONG, CHINA (P.R.C.), People's Republic of China ~72: DING, Xiao;DING, Xiaoyu;REN, Feng;ZHANG, Zhisen;ZHENG, Jiamin~ 33:IB ~31:2024/087976 ~32:16/04/2024;33:IB ~31:2024/103981 ~32:05/07/2024;33:IB ~31:2024/120796 ~32:24/09/2024;33:IB ~31:2024/137781 ~32:09/12/2024;33:IB ~31:2025/077176 ~32:13/02/2025;33:IB ~31:2025/083380 ~32:19/03/2025

2026/10386 ~ Complete ~54:ZWITTERIONIC POLYPEPTIDE CARRIER AND USE THEREOF IN CROSS-BARRIER DRUG DELIVERY ~71:SUZHOU INNOBM PHARMACEUTICALS CO., LTD., Unit 104,Building A4,No.218 Xinghu Street,Suzhou Industrial Park,China (Jiangsu) Pilot Free Trade Zone, Suzhou, 215123, People's Republic of China ~72: Chenya WANG;Han ZHANG;Li XIE;Yu CHAI;Zijian XIONG~ 33:CN ~31:202410527473.0 ~32:29/04/2024

2026/10354 ~ Provisional ~54:MAGNETIC PUZZLE AND METHOD OF MANUFACTURING SAME ~71:TOPLINE MANUFACTURERS CC, 103 Murray Street, Vasco Boulevard, Goodwood, South Africa ~72: PILLAY, Ugan Kisten~

2026/10366 ~ Complete ~54:INTELLIGENT LOW-HEADROOM CAST-IN-PLACE PILE CONSTRUCTION EQUIPMENT, SYSTEM, AND METHOD ~71:CHINA SEVENTEENTH METALLURGICAL CONSTRUCTION GROUP CO., LTD., 588 TianBao Road, Huashan Zone, Maanshan, Anhui, People's Republic of China ~72: Anchun CHENG;Baoju GONG;Bo NAN;Changguo WU;Chao CHEN;Daiwei LI;Dong DAN;Guohui ZHAO;Jia WANG;Jiangong ZHANG;Jiazhang TAO;Jinkun HUANG;Junjun LIU;Lanmin XIE;Lei WANG;Rencai JIN;Shoucheng LIU;Shuxia CHEN;Tongde YU;Wanyun YIN;Xiangyu CHEN;Xinmin WAN;Xixin LU;Yongfu XU~ 33:CN ~31:202510111666.2 ~32:24/01/2025

2026/10368 ~ Complete ~54:A PROCESS FOR RECOVERY OF PRECIOUS METALS FROM THIOSULFATE SOLUTIONS ~71:COVORO MINING SOLUTIONS, LLC, 2571 FITE ROAD, MEMPHIS, TENNESSEE 38127, USA, United States of America;MINING AND PROCESS SOLUTIONS PTY LTD, 11/16 BRODIE HALL DRIVE, BENTLEY, WESTERN AUSTRALIA, AUSTRALIA, Australia ~72: EKSTEEN, Jacobus, Johannes;ORABY, Elsayed, Abdelrady~ 33:AU ~31:2024900953 ~32:05/04/2024

2026/10371 ~ Complete ~54:PYRIMIDINONE DERIVATIVES AS PESTICIDAL COMPOUNDS ~71:BASF AGRICULTURAL SOLUTIONS DEUTSCHLAND GMBH, SPEYERER STR. 2, 67117 LIMBURGERHOF, GERMANY, Germany ~72: ADISECHAN, Ashokkumar;MAITY, Pulakesh;SHAIKH, Rizwan, Shabbir~ 33:IN ~31:202421034520 ~32:01/05/2024;33:EP ~31:24196871.8 ~32:28/08/2024

2026/10380 ~ Complete ~54:DUAL FUSION PROTEIN AND USE THEREOF ~71:CSPC MEGALITH BIOPHARMACEUTICAL CO., LTD., No. 519 Cangsheng Road, High-Tech Zone, Shijiazhuang, People's Republic of China ~72: FAN, Yi;HE, Ke;HUANG, Xiaohui;KONG, Yushan;MU, Jun;QIAN, Hui;SHE, Yisha;SONG, Liping;SU, Yanfang;WAN, Mingyu;WANG, Hongyan;WU, Jing~ 33:CN ~31:202410365082.3 ~32:24/03/2024

2026/10383 ~ Complete ~54:INJECTION OF HYDROGEN PRODUCED BY WATER ELECTROLYSIS IN A UNIT FOR PRODUCING BIOFUELS ~71:AVRIL, 11-13 RUE DE MONCEAU, 75008, France;AXENS, 89 Bd Franklin Roosevelt, B.P. 50802, France;BIONEXT, Chemin de l'usine, France;COMMISSARIAT A L'ENERGIE ATOMIQUE ET AUX ENERGIES ALTERNATIVES, 25 rue Leblanc, Bâtiment Le Ponant D, France;IFP ENERGIES NOUVELLES, 1 et 4 avenue de Bois-Préau, France;THYSSENKRUPP UHDE GMBH, Friedrich-Uhde-Strasse 15, Germany;TOTALENERGIES ONETECH, 2 Place Jean Millier, La Défense 6, France ~72: GRANDJEAN, Julien;HECQUET, Michael;HERAUD, Jean-Philippe~ 33:FR ~31:FR2406769 ~32:24/06/2024

2026/10403 ~ Complete ~54:METHOD FOR ALTERING THE ALCOHOL PERCEPTION OR FLAVOUR OF A CONSUMABLE PREPARATION ~71:DÖHLER GMBH, Riedstrasse 7-9, 64295, Darmstadt, Germany ~72: BIAFORA, Agostino;GRAF, Felix Marcel Rainer;VARDANYAN, Arpine~ 33:DE ~31:10 2024 119 406.5 ~32:09/07/2024;33:DE ~31:10 2024 119 522.3 ~32:10/07/2024

2026/10405 ~ Complete ~54:WIRE POSITIONING DEVICES ~71:AFFORDABLE WIRE MANAGEMENT, LLC, 90 Washington Valley Rd, Ste 1299 Bedminster, New Jersey 07921, United States of America ~72: BALAPURE, Sheefali;DE FRESART, Benjamin;HRUBY, Peter Mark;KHAN, Umar Ali;MENDOZA, Mark;RAND, Scott Robert;SMITH, Daniel Robert~ 33:US ~31:63/640,748 ~32:30/04/2024

2026/10408 ~ Complete ~54:AN ANTIMICROBIAL CLEANSING COMPOSITION ~71:UNILEVER GLOBAL IP LIMITED, Port Sunlight, Wirral, Merseyside, CH62 4ZD, United Kingdom ~72: BARNE, Sameer Keshav;BEENA, Karthika;GHATLIA, Naresh Dhirajlal;NARASIMHAMURTHY, Akshatha;SAJI, Maya Treesa~ 33:EP ~31:24183324.3 ~32:20/06/2024

2026/10382 ~ Complete ~54:CHLORIDE-HYDROCHLORIDE SALT OF A BENZODIAZOLIUM ENAC INHIBITOR ~71:ENTERPRISE THERAPEUTICS LIMITED, Sussex Innovation Centre Science Park Square, United Kingdom ~72: DANAHAY, Henry, Luke;MCINTYRE, Steven;PEARCEY, Leigh;SAUNDERS, Alex;SCHOFIELD, Thomas, Beauregard~ 33:GB ~31:2406247.3 ~32:03/05/2024

2026/10385 ~ Complete ~54:AN IMMUNOGENIC OR VACCINE COMPOSITION COMPRISING A LIVE ATTENUATED AVIAN METAPNEUMOVIRUS (AMPV) FOR USE IN THE PREVENTION AND/OR TREATMENT OF AN AMPV INFECTION ~71:HIPRA SCIENTIFIC, S.L.U., Avda. La Selva, 135, Spain ~72: FEU COLL, Sonia;GUIRADO CACERES, Evelina~ 33:ES ~31:P202430254 ~32:05/04/2024

2026/10360 ~ Complete ~54:LAND SHAPING DEVICE FOR ECOLOGICAL RESTORATION OF ASBESTOS TAILINGS ~71:Qinghai Provincial Land Remediation and Ecological Restoration Center, No. 77 Haiyan Road, Chengxi District, Xining City, Qinghai Province, 810000, People's Republic of China ~72: BAO Xinmin;CHEN Xuejun;HAO Guangjing;LI Chen;LI Dongbo;LI Lexuan;MA Mingxiong;QUAN Chaobin;WANG Wanping;YANG Yongxia;YANG Zheng;ZHAN Peiyuan;ZHANGChumeng;ZHANG Shilong~

2026/10384 ~ Complete ~54:METHOD AND SYSTEM FOR INSPECTING A FUEL CELL STACK ~71:POWERCELL SWEDEN AB, Ruskvädersgatan 12, Sweden ~72: ANDERSSON, Daniel~ 33:SE ~31:2430208-5 ~32:17/04/2024

2026/10388 ~ Complete ~54:ARTICULATED CONVEYOR FOR EARTH MATERIAL PROCESSING EQUIPMENT ~71:SANDVIK LTD, 2 Tullyvannon Road, Ballygawley, DUNGANNON BT70 2HW, UNITED KINGDOM, United Kingdom ~72: BAXTER, Adam;SMYTH, Stuart~ 33:EP ~31:24167833.3 ~32:29/03/2024

2026/10395 ~ Complete ~54:SOLID FORM OF A QUINOLINE CARBOXAMIDE COMPOUND ~71:SYNGENTA CROP PROTECTION AG, Rosentalstrasse 67, BASEL 4058, SWITZERLAND, Switzerland ~72: HONE, John;KEATES, Adam~ 33:EP ~31:24179070.8 ~32:30/05/2024

2026/10410 ~ Complete ~54:METHODS AND COMPOSITIONS FOR THE TREATMENT OF ANDROGENIC ALOPECIA ~71:FRANCOIS, Cedric, 6400 Westwind Way, Suite A, Crestwood, United States of America ~72: FRANCOIS, Cedric~ 33:US ~31:63/638,114 ~32:24/04/2024

2026/10349 ~ Provisional ~54:A SYSTEM FOR CONVERTING A BANK DEPOSIT INTO A LOCKED UTILITY TOKEN WITH SECTOR-BASED PROFIT SHARING, THREE-LAYER GROWTH MODEL, TIERED SECONDARY MARKET, AND CONFIGURABLE PAYOUT RULES ~71:Mfumelo Blessing Kolela, Laudium, South Africa ~72: Mfumelo Blessing Kolela~

2026/10361 ~ Complete ~54:METHOD FOR IDENTIFYING AND MARKING SUGARCANE PANICLE STATUS BASED ON UAV MULTISPECTRAL IMAGES ~71:Institute of Nanfan and Seed Industry, Guangdong Academy of Sciences, No. 10 Shiliugang Road, Haizhu District, Guangzhou City, Guangdong Province, 510316, People's Republic of China ~72: CHANG, Hailong;CHEN, Junlv;CHENG, Yinjie;SUN, Shengren;WANG, Qinnan;WANG, Zhuqing;XIE, Jing;ZHANG, Chuiming;ZHOU, Feng~

2026/10378 ~ Complete ~54:VHH ANTIBODIES WHICH BIND TO CANINE ALBUMIN ~71:272BIO LIMITED, The Gateway Building, Collegiate Square, Shinfield, United Kingdom ~72: BERTELLI, François;OWEN, Charles E.;RANDALL, Thomas;THOMPSON, Luke~ 33:GB ~31:2405566.7 ~32:19/04/2024

2026/10399 ~ Complete ~54:METHOD OF INDICATING OVER-IRRIGATION OF SOIL, BURIABLE SOIL MONITORING DEVICE AND CORRESPONDING METHODS OF CALIBRATION ~71:SOIL SCOUT OY, Vetokuja 4, Finland ~72: Johannes TIUSANEN;Jussi Aleksi SIRKIÄ~ 33:EP ~31:24174225.3 ~32:03/05/2024

2026/10348 ~ Provisional ~54:LESS-LETHAL DEVICE AND AMMUNITION SYSTEM WITH MECHANICAL SAFEGUARDS AGAINST CONVERSION TO LETHAL USE ~71:Scott Farish Carpenter, 17 Winton Crescent, Woodbridge Island, Milnerton, South Africa ~72: Scott Farish Carpenter~

2026/10350 ~ Provisional ~54:A LOCK-AWARE, ROLE-ADAPTIVE DIGITAL WALLET FOR A BANK DEPOSIT TOKEN WITH SECTOR-BASED PROFIT SHARING, THREE-LAYER GROWTH DISPLAY, TIERED SECONDARY MARKET INTERFACE, SETTLEMENT ACCOUNT BRIDGE, TAX CALCULATION ENGINE, AND COLLATERAL MANAGEMENT ~71:Mfumelo Blessing Kolela, Laudium, South Africa ~72: Mfumelo Blessing Kolela~

2026/10355 ~ Provisional ~54:8-NITROQUINOLONE COMPOUNDS, AND USE THEREOF ~71:NORTH-WEST UNIVERSITY, 1 Hoffman Street Joon van Rooy Building, Potchefstroom, 2520, South Africa ~72: BETECK, Richard Mbi;DUBE, Phelelisiwe;LEGOABE, Lesetja~

2026/10372 ~ Complete ~54:THERAPEUTIC ANTIBODY EPITOPE-TAGGED CAR T CELLS FOR ENHANCED CONTROL AND SAFETY ~71:MOONLIGHT BIO, INC., 1616 EASTLAKE AVE. E., ALEXANDRIA LAUNCHLABS SUITE 208, SEATTLE, WASHINGTON 98102, USA, United States of America ~72: ALBERSHARDT, Ting-Lan;DANIELS, Jay, Carroll;GARCIA, Julie, Marie;JARJOUR, Jordan~ 33:US ~31:63/572,671 ~32:01/04/2024

2026/10381 ~ Complete ~54:AUTOMATIC RAIL WELD STRAIGHTENING SYSTEM AND STRAIGHTENING METHOD ~71:CCCC SECOND HIGHWAY ENGINEERING BUREAU CO., LTD., No. 262, East Zhangba Road, Yanta District, Xi'an City, People's Republic of China;CHENGDU AIGRE TECHNOLOGY CO., LTD, No. 39, Gangtong North 1st Road, Chengdu Modern Industrial Port, Pidu District, People's Republic of China;CHINA HARBOUR ENGINEERING COMPANY LIMITED, No. 9 Chunxiu Road, Dongzhimen, People's Republic of China ~72: BAI, Xin;CHEN, Hong;CHEN, Jian;DANG, Yayun;LI, Xuan;TAN, Hongtao;WANG, Feilong;WANG, Yonggang;ZENG, Junjie;ZHANG, Hongyuan;ZHANG, Lang;ZHANG, Xuechao;ZHANG, Yanjuan;ZHANG, Yinlong~ 33:CN ~31:202611001018.2 ~32:07/07/2026

2026/10387 ~ Complete ~54:ELECTROENCEPHALOGRAPHY-GUIDED DOSING OF PSYCHEDELICS ~71:TRYPTAMINE THERAPEUTICS LTD, Suite 201, 697 Burke Road, Australia ~72: GILLIGAN, James;GUZZO, Peter~ 33:US ~31:63/571,179 ~32:28/03/2024

2026/10392 ~ Complete ~54:METHOD AND APPARATUS FOR MONITORING SCREENING DEVICE PROCESS EFFICIENCY ~71:SANDVIK ROCK PROCESSING AUSTRALIA PTY LIMITED, 65 Epping Rd, NORTH RYDE 2113, NEW SOUTH WALES, AUSTRALIA, Australia ~72: HARD, Jeremy;HITCHCOCK, Louise;ROWE, Jacob~ 33:EP ~31:24167837.4 ~32:29/03/2024;33:EP ~31:24177272.2 ~32:22/05/2024

2026/10396 ~ Complete ~54:TIPARP INHIBITOR COMPOUNDS ~71:ABBVIE INC., 1 N. Waukegan Road, NORTH CHICAGO 60064, IL, USA, United States of America ~72: BAI, Wenju;COHEN, Daniel;DAI, Yujia;DE LA ROSA, Martha A.;DUBOVYK, Igor;FREY, Robin;HASVOLD, Lisa A.;JI, Zhiqin;JUDD, Andrew;LIU, Dachun;MANDAL, Debashis;PUNNA, Sreenivas~ 33:US ~31:63/640,741 ~32:30/04/2024

2026/10365 ~ Complete ~54:A HEIGHT-ADJUSTABLE PREFABRICATED ASSEMBLED STAIR PRESSURE-BEARING AND DAMPING SUPPORT ~71:Henan University of Urban Construction, Longxiang Avenue, Xincheng District, Pingdingshan City, Henan Province, People's Republic of China ~72: Cui Yanwei;Guo Weiwei;Li Jiangle;MAN Yuan;SHI Luke;Yin Xiaojing~

2026/10375 ~ Complete ~54:LEGACY SYSTEM ~71:BESTBIER, Nico, 53 Foxglove Street, Groenvlei, South Africa;MARALACK, Lourens Phillip Edward, 33 Tarrentaal Street, South Africa ~72: BESTBIER, Nico;MARALACK, Lourens Phillip Edward~ 33:ZA ~31:2024/09482 ~32:10/04/2025;33:WO ~31:PCT/IB2026/053241 ~32:01/04/2026

2026/10391 ~ Complete ~54:CONTROLLING DRILLING UNIT BASED ON DISTANCE TO ROCK SURFACE ~71:SANDVIK MINING AND CONSTRUCTION OY, Pihtisulunkatu 9, TAMPERE 33330, FINLAND, Finland ~72: FRANCKE, Totte;HINKKA, Jari;KÄÄNTÄ, Kimmo;LÄMSÄ, Vili;PESOLA, Mikko;VIINIKAINEN, Mikko~ 33:EP ~31:24184359.8 ~32:25/06/2024

2026/10401 ~ Complete ~54:BIXLOZONE MIXTURE, COMPOSITION AND HERBICIDAL METHOD ~71:FMC CORPORATION, 2929 Walnut Street, Philadelphia, Pennsylvania, 19104, United States of America ~72: PURI, Atul~ 33:US ~31:63/572,218 ~32:30/03/2024

2026/10406 ~ Complete ~54:CABLE SUPPORT SYSTEMS AND METHODS OF USE ~71:AFFORDABLE WIRE MANAGEMENT, LLC, 90 Washington Valley Rd, Ste 1299 Bedminster, New Jersey 07921, United States of America ~72: HRUBY, Peter Mark;RAND, Scott Robert;SMITH, Daniel Robert~ 33:US ~31:63/640,744 ~32:30/04/2024

2026/10412 ~ Complete ~54:SYSTEM FOR MANAGING THE EMPTYING OF BINS FOR COLLECTING MUNICIPAL SOLID WASTE ~71:L.C. S.R.L., Via I Maggio, 59, Isorella (BS), Italy, Italy ~72: COTTARELLI, Matteo;TROMBINI, Luca~

. - APPLIED ON 2026/10/29 -

2026/10416 ~ Provisional ~54:SYSTEM AND METHOD FOR BINDING A VERIFIED IDENTITY TO A LIVE PERSON AND PROVING THAT PERSON'S PRESENCE AT A LOCATION USING DEVICE-HELD SIGNED CLAIMS AND A COMMITTED FACE TEMPLATE ~71:DIGIFID (PTY) LTD, a South African company, registration no. 2026/744096/07, 126 Daisy Street, Sandown, South Africa ~72: SASCHIN RAJENDRA NAIDOO~

2026/10417 ~ Provisional ~54:IMPLANTABLE POWER-SUPPLY DEVICE AND ENDOPROSTHESIS MONITORING SYSTEM ~71:MOKETE, Lipalo, 16 Queens Road, Bryanston 2191, SOUTH AFRICA, South Africa ~72: MOKETE, Lipalo~

2026/10423 ~ Complete ~54:NOVEL HYDROGEN PLASMA SMELTING REDUCTION PROCESS ~71:METIX (PROPRIETARY) LIMITED, 204 Rivonia Road, Morningside, South Africa ~72: KLEYNHANS, Ernst Lodewyk Johannes;LAUBSCHER, Abraham Johannes;LOUW, Stephan Christiaan;WICKHAM, Tristan Kyle~ 33:EP ~31:25214693.1 ~32:10/11/2025

2026/10434 ~ Complete ~54:SYSTEMS AND METHODS FOR OPERATING AN OVERHEAD ELECTRICAL LINE ~71:CTC GLOBAL CORPORATION, 2026 McGaw Avenue, IRVINE 92614, CA, USA, United States of America ~72: BOSZE, Eric;CORBALIS, Kevin;GOEKJIAN, David~ 33:IB ~31:2024/023469 ~32:05/04/2024;33:US ~31:63/680,444 ~32:07/08/2024

2026/10435 ~ Complete ~54:PEPTIDE ANALOGS AND METHODS OF USING THE SAME ~71:NOVO NORDISK A/S, Novo Allé, BAGSVÆRD DK-2880, DENMARK, Denmark ~72: MOYES, Christopher;NEELAMKAVIL, Santhosh F.~ 33:US ~31:63/641,660 ~32:02/05/2024;33:US ~31:63/713,191 ~32:29/10/2024;33:US ~31:63/757,920 ~32:13/02/2025

2026/10442 ~ Complete ~54:ANTI-IL-1RAP ANTIBODY, AND PHARMACEUTICAL COMPOSITION AND USE THEREOF ~71:AKESO BIOPHARMA CO., LTD., 6 Shennong Road, Torch Development Zone Zhongshan, Guangdong 528437, People's Republic of China ~72: LI, Baiyong;WANG, Zhongmin;XIA, Yu;ZHANG, Peng~ 33:CN ~31:202410402598.0 ~32:03/04/2024

2026/10445 ~ Complete ~54:MULTISPECIFIC ANTIBODY WITH BINDING SPECIFICITY FOR IL-11 AND IL-17 ~71:UCB BIOPHARMA SRL, Allée de la Recherche, 60, B-1070, Brussels, Belgium ~72: BHATTA,

Pallavi;BIALAS, Aleksandra;BOWSHER, Leo Alexander;EDWARDS, Hannah Elizabeth;HUMPHREYS, David Paul;KHAN, Adnan Rahman;MAGGIOLI, Elisa;PETERS, Shirley Jane;WHITTAKER, Zofia~ 33:EP ~31:24176621.1 ~32:17/05/2024

2026/10439 ~ Complete ~54:ENGINEERED PLANT MICROORGANISMS FOR RNAI DELIVERY AND USES THEREOF ~71:ROBIGO, INC., 750 Main Street, CAMBRIDGE 021319, MA, USA, United States of America ~72: BRUNET, Yannick;CHAU-LY, Ilea;INDERBITZIN, Patrik;JOSHI, Komal;KEARNEY, Sean;LYFORD, Jeffrey;MARQUEZ, Luis;MORRISON, Philippa Reeder;TEITELBAUM, Jacob R.;THOMPSON, Mary;TRUJILLO RODRIGUEZ, Lidimarie;WALLACE, Andrea Kimi~ 33:US ~31:63/640,503 ~32:30/04/2024;33:US ~31:63/716,511 ~32:05/11/2024;33:US ~31:63/769,208 ~32:10/03/2025

2026/10452 ~ Provisional ~54:STORAGE BATTERY ~71:HERMANUS CHRISTOFFEL PETRUS HUMAN, 8 DUIKERLAAN MIDDELPOS UPINGTON, South Africa ~72: HERMANUS CHRISTOFFEL PETRUS HUMAN;JAN PETRUS HUMAN~

2026/10428 ~ Complete ~54:MONITORING AND EVALUATION SYSTEM OF SOLAR POWER GENERATION ~71:ENERGY VANTAGE LIMITED CO,. LTD., UNIT 706, 7/F., SOUTH SEAS CENTRE, TOWER 2, 75 MODY ROAD, TSIMSHATSUI, KOWLOON, HONG KONG 999077, CHINA, People's Republic of China ~72: POCHANA, Mr. Tanachat~ 33:TH ~31:2401002113 ~32:29/03/2024

2026/10437 ~ Complete ~54:IMAGE PROCESSING TO MEASURE ABSOLUTE SIZE AND LOCATION OF AREA OF INTEREST ASSOCIATED WITH OBJECT ~71:SOLERA HOLDINGS, LLC, 1500 Solana Blvd., Building #6, Suite 6300, WESTLAKE 76262, TX, USA, United States of America ~72: KUNZ, Marco;MARTINEZ ALBALA, Antonio;WENGELER, Simon~ 33:US ~31:18/653,799 ~32:02/05/2024

2026/10446 ~ Complete ~54:METHOD FOR MANUFACTURING AN EXTERIOR HOUSING FOR A MUNITION AND EXTERIOR HOUSING FOR A MUNITION ~71:SIPPOLA ASF OY, c/o Salminen Korkeavuorenkatu 2a B25, Helsinki, 00140, Finland ~72: MANNINEN, Timo;SALMINEN, Jyrki~ 33:FI ~31:20245604 ~32:13/05/2024

2026/10447 ~ Complete ~54:BIS-BICYCLOHETEROARYL MACROCYCLES AND THEIR USE ~71:BLOSSOMHILL THERAPEUTICS, INC., 10255 Science Center Drive, Suite 200, San Diego, California, 92121, United States of America ~72: CUI, Jingrong Jean;ROGERS, Evan W;RUI, Eugene Yuanjin~ 33:US ~31:63/644,833 ~32:09/05/2024

2026/10425 ~ Complete ~54:ENCODING METHOD, DECODING METHOD, BITSTREAM, ENCODER, DECODER, AND STORAGE MEDIUM ~71:GUANGDONG OPPO MOBILE TELECOMMUNICATIONS CORP., LTD., No. 18, Haibin Road, Wusha, Chang'an, Dongguan, Guangdong 523860, People's Republic of China ~72: HUO, Junyan;LI, Ming;MA, Yanzhuo;QIAO, Wenhan;YANG, Fuzheng~

2026/10430 ~ Complete ~54:COMPOSITIONS & METHODS FOR ADENO-ASSOCIATED VIRUS CAPSID VARIANT PURIFICATION ~71:SPARK THERAPEUTICS, INC., 3737 Market Street, Ste 1300, PHILADELPHIA 19104, PA, USA, United States of America ~72: JIN, Mi;KHANAL, Ohnmar;KUMAR, Vijesh~ 33:US ~31:63/575,763 ~32:07/04/2024

2026/10438 ~ Complete ~54:GUIDE RNAS FOR ALLELE-SELECTIVE GENE EDITING, AND COMPOSITIONS AND METHODS RELATING THERETO ~71:INCISIVE GENETICS, INC., 200-980 George Street, VANCOUVER V6A 0H9, BRITISH COLUMBIA, CANADA, Canada;THE UNIVERSITY OF BRITISH COLUMBIA, 103-6190 AGRONOMY ROAD, VANCOUVER V6T 1Z4, BRITISH COLUMBIA, CANADA, Canada ~72: CAPRON, Arnaud;CARON, Nicholas;CHENG, Jung-Chien;HILL, Austin;LEAVITT, Blair;LIU, Yaxin;WAGNER, Pamela;YI, Yuyin~ 33:US ~31:63/647,377 ~32:14/05/2024;33:US ~31:63/680,656 ~32:08/08/2024

2026/10448 ~ Complete ~54:ANTIBODY WITH BINDING SPECIFICITY FOR IL-11 ~71:UCB BIOPHARMA SRL, Allée de la Recherche 60, 1070, Brussels, Belgium ~72: BHATTA, Pallavi;BOWSHER, Leo Alexander;EDWARDS, Hannah Elizabeth;MAGGIOLI, Elisa;WHITTAKER, Zofia~ 33:EP ~31:24176750.8 ~32:17/05/2024

2026/10450 ~ Complete ~54:PERSON DETECTING DEVICE ~71:OPTEX CO., LTD., 5-8-12, Ogoto, Otsu-shi, Japan ~72: IWATA, Yohei;ONISHI, Kohei~

2026/10449 ~ Complete ~54:DEVICE AND METHOD FOR SEQUESTERING CARBON DIOXIDE (CO2) ~71:DIOXINK SA, Cantersteen 47, 1000, Belgium;MASSE, Robert, 507 Avenue Brugmann, 1180, Belgium ~72: MASSE, Robert~ 33:BE ~31:2024/5265 ~32:03/05/2024

2026/10451 ~ Provisional ~54:VR EXPLANATION ~71:LIMPHO VITALIS RAMAHAETSANE, AD037A LEKGALONG, South Africa ~72: LIMPHO VITALIS RAMAHAETSANE~

2026/10414 ~ Provisional ~54:GLOBAL DIGITAL VALUE EXCHANGE PROTOCOL AND SYSTEM FOR VERIFIED VALUATION ATTESTATION AND CROSS BORDER TRADING OF PHYSICAL AND DIGITAL ASSETS USING VALUE SCORE - PREMIUM HIGH PERFORMANCE EXTENSION ~71:Makhado Nkhumeleni Rodney, 623 Tshaulu Tshilaphala, South Africa ~72: Makhado Nkhumeleni Rodney~ 33:ZA ~31:2026/10068 ~32:20/10/2026;33:ZA ~31:2026/10235 ~32:26/10/2026

2026/10418 ~ Provisional ~54:PROSTHETIC ATTACHMENT FOR ORTHOPAEDIC ENDOPROSTHESES ~71:MOKETE, Lipalo, 16 Queens Road, Bryanston 2191, SOUTH AFRICA, South Africa ~72: MOKETE, Lipalo~

2026/10421 ~ Provisional ~54:CROSS BORDER OSBP FUNNEL EFFECT ~71:Yusuf Gaffore, 3 Nero Street, Gelvan Park, Port Elizabeth, 6020, South Africa ~72: Yusuf Gaffore~

2026/10424 ~ Complete ~54:A PIPE COUPLING ~71:WRIGHT, John Peter, 161 Galjoen Road, Wadeville, South Africa ~72: WRIGHT, John Peter~ 33:ZA ~31:2025/06497 ~32:01/08/2025

2026/10444 ~ Complete ~54:MACROCYCLIC COMPOUND, PREPARATION METHODS AND MEDICINAL USES THEREOF ~71:HANSOH BIO LLC, Hansoh Bio, 9900 Medical Center Drive, Ste 200, Rockville, Maryland, 20850, United States of America;JIANGSU HANSOH PHARMACEUTICAL GROUP CO., LTD., Economic and Technological Development Zone, Lianyungang, Jiangsu, 222069, People's Republic of China;SHANGHAI HANSOH BIOMEDICAL CO., LTD., Building 11, No. 3728 Jinke Road, China (Shanghai) Pilot Free Trade Zone, Pudong New Area, Shanghai, 201203, People's Republic of China ~72: HE, Shuwen;KHANNA, Avinash;KIER, Matthew;MILLER, Austin;XU, Fan~ 33:US ~31:63/572,483 ~32:01/04/2024;33:US ~31:63/654,379 ~32:31/05/2024;33:US ~31:63/682,923 ~32:14/08/2024;33:US ~31:63/695,073 ~32:16/09/2024;33:US ~31:63/715,177 ~32:01/11/2024;33:US ~31:63/726,318 ~32:28/11/2024;33:US ~31:63/733,950 ~32:13/12/2024;33:US ~31:63/733,975 ~32:13/12/2024;33:US ~31:63/746,448 ~32:17/01/2025;33:US ~31:63/746,474 ~32:17/01/2025

2026/10415 ~ Provisional ~54:MODULAR ACTIVITY CASE ~71:DRY, Japie Greyling, 63B WENNING STRAAT, GROENKLOOF, 0181, SOUTH AFRICA, South Africa;VENTER, Jan-Hendrik, 21 MOUNT ALVERSTONE, MIDLANDS ESTATE, PRETORIA, 1692, South Africa ~72: DRY, Japie Greyling;VENTER, Jan-Hendrik~

2026/10431 ~ Complete ~54:PATIENT CARE SYSTEM AND METHOD OF MONITORING INJECTIONS ~71:ASCENDIS PHARMA A/S, Tuborg Boulevard 12, HELLERUP 2900, DENMARK, Denmark ~72: ARREDONDO ZAMUDIO, Abel Arturo;HAAHR, Rasmus Veel;JENSEN, Kurt Stæcker;MADSEN, Nils Berg;NIELSEN, Tage Korsdal~ 33:EP ~31:24177810.9 ~32:23/05/2024

2026/10441 ~ Complete ~54:COMPOUNDS FOR THE TREATMENT OF CANNABIS USE DISORDER ~71:UNIVERSITAT AUTÒNOMA DE BARCELONA, Edifici A. Rectorat, Campus universitari s/n, 08193, Bellaterra, Spain;UNIVERSITAT POMPEU FABRA, C de la Merce, 10-12, 080002, Barcelona, Spain ~72: ANDREU MARTÍNEZ, David;GALLO, Maria;MALDONADO LÓPEZ, Rafael;MARTÍN GARCÍA, Elena~ 33:EP ~31:24382597.3 ~32:03/06/2024

2026/10422 ~ Complete ~54:MODULAR BARRIER WALL FOR AN UNDERGROUND MINE PASSAGE ~71:MANTELLA TRADING 310 (PTY) LIMITED, 4 Arnheim Crescent, Die Heuwel Industrial, South Africa ~72: GARETH RYAN LINDLEY;HEINE BENJAMIN BOOYSEN;JACOBUS FREDERICK ENGELBRECHT;JEREMIAH PHIKWA SKHOSANA~

2026/10426 ~ Complete ~54:INTRA TEMPLATE MATCHING PREDICTION METHOD AND APPARATUS, VIDEO CODING METHOD AND APPARATUS, VIDEO DECODING METHOD AND APPARATUS, AND SYSTEM ~71:GUANGDONG OPPO MOBILE TELECOMMUNICATIONS CORP., LTD., No.18 Haibin Road, Wusha, Chang'an, Dongguan, Guangdong, 523860, People's Republic of China ~72: WANG, Fan~

2026/10427 ~ Complete ~54:ACID-SENSITIVE TARGETED NANO-DELIVERY SYSTEM BASED ON CELLULOSE NANOCRYSTALS, PREPARATION METHOD THEREOF AND APPLICATION THEREOF ~71:Zhengzhou University, No.100, Science Avenue, Zhengzhou National High & New Technology Industries Development Zone, Zhengzhou City, Henan Province, 450000, People's Republic of China ~72: CHENG Yuanyuan;Jong Bae Park;LI Na;LI Xin;LI Zichu;LIANG Tianyu;LIN Weiwei;LUO Anlin;MA Longjun;WANG Shuojing~ 33:CN ~31:2026115931174 ~32:15/10/2026

2026/10429 ~ Complete ~54:FROTH FLOTATION CELL LAUNDER ~71:PREPQUIP INTELLECTUAL PROPERTY (PTY) LTD, 20 Belgrade Street, Spartan, South Africa ~72: TERBLANCHE, Andre Nardus~ 33:ZA ~31:2025/04032 ~32:13/05/2025

2026/10419 ~ Provisional ~54:DUAL FRESH: AN INTEGRATED DUAL-RESERVOIR PERSONAL-CARE CONTAINER INCORPORATING SEPARATE SPRAY AND ROLL-ON DISPENSING SYSTEMS AND A CONCEALED KEYED SLIDE-AND-LOCK CONNECTING MECHANISM." ~71:Lucky Thupisa Tibane, 22641 Ext 4 Motsumi Street MMamelodi East, South Africa;Lucky Thupisa Tibane, 22641 Ext 4 Motsumi Street Mamelodi East, South Africa ~72: Lucky Thupisa Tibane~

2026/10420 ~ Provisional ~54:METHOD AND SYSTEM FOR CLIENT-SIDE SPORTS-PERFORMANCE EVENT TAGGING ~71:MALAN, Geor Cillie, 28 Springfontein Street, Stellenryk, CAPE TOWN 7550, SOUTH AFRICA, South Africa ~72: MALAN, Geor Cillie~

2026/10432 ~ Complete ~54:SYSTEM AND METHOD FOR EXTRACTING MAGNETS FROM A VARIETY OF HARD DRIVES ~71:CYCLIC MATERIALS INC., 70 Bond Street, Unit 400, TORONTO M5B 1X3, ONTARIO, CANADA, Canada ~72: CIANCI, Jonathan;FORSTNER, Alexander;NEE, Patrick William Jr.~ 33:US ~31:63/640,702 ~32:30/04/2024

2026/10433 ~ Complete ~54:FUNGICIDAL COMPOSITIONS ~71:SYNGENTA CROP PROTECTION AG, Rosentalstrasse 67, BASEL 4058, SWITZERLAND, Switzerland ~72: EDMUNDS, Andrew;GRASSO, Valeria;SCARBOROUGH, Christopher Charles;WEISS, Matthias;WOLF, Hanno Christian~ 33:EP ~31:24175923.2 ~32:15/05/2024;33:EP ~31:24210861.1 ~32:05/11/2024

2026/10436 ~ Complete ~54:SUBCUTANEOUS FORMULATIONS, PRE-FILLED SYRINGES AND METHODS OF USE THEREOF ~71:ARGENX BV, Industriepark Zwijnaarde 7, GHENT 9052, BELGIUM, Belgium ~72: BORGIONS, Filip;DE MUYNCK, Cassandra;LABARRE, Michael James;NOUKENS, Jan;STALS, Hilde;SZAKADY, Emöke~ 33:US ~31:63/645,466 ~32:10/05/2024

2026/10440 ~ Complete ~54:COOLANT DISTRIBUTION UNIT AND METHOD ~71:BALTIMORE AIRCOIL COMPANY, INC., 7600 Dorsey Run Road, Jessup, United States of America ~72: AARON, David Andrew;MORRISON, Frank;ROUSSELET, Yohann Lilian;RUBINO, Lukas;XU, Jian~ 33:US ~31:63/649,574 ~32:20/05/2024

2026/10443 ~ Complete ~54:SLC6A19 INHIBITOR COMPOUND, PHARMACEUTICAL COMPOSITION, PREPARATION METHOD, AND USE ~71:CHANGCHUN GENESCIENCE PHARMACEUTICAL CO., LTD., 1718 Yueda Road, Changchun High-Tech Dev. Zone, Changchun, Jilin, 130012, People's Republic of China ~72: JIN, Lei;LU, Biao;WANG, Siqin;XU, Hang;YANG, Fanglong;ZHANG, Chen;ZHAO, Sheng~ 33:CN ~31:202410432241.7 ~32:10/04/2024;33:CN ~31:202410524252.8 ~32:28/04/2024;33:CN ~31:202410635112.8 ~32:21/05/2024;33:CN ~31:202410772822.5 ~32:14/06/2024;33:CN ~31:202411000825.3 ~32:24/07/2024;33:CN ~31:202411319539.3 ~32:20/09/2024;33:CN ~31:202411707787.5 ~32:26/11/2024;33:CN ~31:202510397113.8 ~32:31/03/2025

2026/10454 ~ Provisional ~54:SAFETY-CENTERED WEARABLE MONITORING AND EMERGENCY ALERT SYSTEM ~71:TASNEEM MONINE XAKI, 152 St Georges Street, South Africa ~72: TASNEEM MONINE XAKI~

2026/10455 ~ Provisional ~54:DISTRIBUTED SOLAR-POWERED PERIMETER EARLY-WARNING AND TAMPER-DETECTION SYSTEM ~71:TASNEEM MONINE XAKI, 152 St Georges Street, South Africa ~72: TASNEEM MONINE XAKI~

. - APPLIED ON 2026/10/30 -

2026/10456 ~ Provisional ~54:AN AUTONOMOUS EDGE-COMPUTING SURVEILLANCE NODE WITH ACOUSTIC PRE-BUFFERING, OFF-GRID MESH FAILOVER, AND HARDWARE EVIDENCE SEALING ~71:Nozipho Primrose Qwabe, Old Marine Drive Foreshore, South Africa ~72: Nozipho Primrose Qwabe~

2026/10467 ~ Complete ~54:A SECURE LOGISTICS MONITORING USING IOT AND BLOCKCHAIN ~71:VISHWAKARMA INSTITUTE OF TECHNOLOGY, 666, UPPER MARKET RD, UPPER INDIRA NAGAR, BIBWEWADI, PUNE, MAHARASHTRA, 411037, India;VISHWAKARMA UNIVERSITY, SURVEY NO 2 3, 4, KONDHWA MAIN RD, LAXMI NAGAR, BETAL NAGAR, KONDHWA, PUNE, MAHARASHTRA, 411048, India ~72: HONMANE, Nilam Sahebrao;PAWAR, Pruthviraj Ajit;THOPATE, Kaushalya Vaibhav~

2026/10476 ~ Complete ~54:AN EDGE AUTONOMY AND LOW-LATENCY FAULT ISOLATION IN HIGH-POWER IOT SYSTEMS ~71:Vishwakarma Institute of Technology, 666, UPPER MARKET RD, UPPER INDIRA NAGAR, BIBWEWADI, PUNE, MAHARASHTRA, 411037, India;Vishwakarma University, SURVEY NO 2 3, 4, KONDHWA MAIN RD, LAXMI NAGAR, BETAL NAGAR, KONDHWA, PUNE, MAHARASHTRA, 411048, India ~72: HONMANE, Nilam Sahebrao;PATIL, Mahendra Suhas;THOPATE, Kaushalya Vaibhav~

2026/10494 ~ Complete ~54:A GOLD PRICE PREDICTION SYSTEM ~71:VISHWAKARMA INSTITUTE OF TECHNOLOGY, 666, UPPER MARKET RD, UPPER INDIRA NAGAR, BIBWEWADI, PUNE, MAHARASHTRA, 411037, India;VISHWAKARMA UNIVERSITY, SURVEY NO 2 3, 4, KONDHWA MAIN RD, LAXMI NAGAR, BETAL NAGAR, KONDHWA, PUNE, MAHARASHTRA, 411048, India ~72: CHAUDHARI, Prasad;PALOD, Raghav Shivdayal;SHIRBAVIKAR, Ketki~

2026/10523 ~ Complete ~54:A METHOD FOR RECOVERY OF NICKEL FROM COPPER REFINERY WASTE EFFLUENT ~71:HINDALCO INDUSTRIES LIMITED, One Unity Center (Formerly called as One International Center), Tower 4, 21st Floor, Senapati Bapat Marg, India ~72: DESAI, Bhavin;LAL DHOBI, Pappu;PANCHAL, Charmi;TATHAVADKAR, Vilas~ 33:IN ~31:202421026545 ~32:30/03/2024

2026/10534 ~ Complete ~54:COMBINATION OF ANTIBODIES TARGETING DLL4/VEGF AND CD137 AGONISTS OR ANTI-PD1/ANTI-PD-L1 ANTIBODIES FOR THE TREATMENT OF CANCER ~71:COMPASS THERAPEUTICS, INC., 80 Guest Street, Suite 601, BOSTON 02135, MA, USA, United States of America ~72: ALBU, Diana;DUFFY, Rachel;GONG, Bing;SACHSENMEIER, Kris;SCHUETZ, Thomas;ULUMBEN, Amy Daniel;VISINTIN, Alberto~ 33:US ~31:63/574,664 ~32:04/04/2024

2026/10460 ~ Provisional ~54:FASCIA ROLLER ~71:Angela Dianne Henderson, 21 Karras, 889 Sovereign Road, Wilgeheuwel, 1724, South Africa ~72: Angela Dianne Henderson~

2026/10464 ~ Complete ~54:BIOLOGICAL ORGANIC FERTILIZER FERMENTED FROM LIVESTOCK MANURE AND PREPARATION METHOD THEREOF ~71:Naqu Prefecture Tazhiyuan Energy & Environmental Protection Co., Ltd., North of Nagqu Health Care Hospital in the Tibet, Autonomous Region, People's Republic of China ~72: Cirenmingjiu;Danzengqiongnai~ 33:CN ~31:2026103286018 ~32:18/03/2026

2026/10466 ~ Complete ~54:LASER POSITIONING UNMANNED AERIAL VEHICLE PESTICIDE BOMB MULTI-STAGE EXPLOSION ATOMIZATION SPRAYING MECHANISM ~71:QINGHAI HIGHER VOCATIONAL AND TECHNICAL INSTITUTE (HAIDONG SECONDARY VOCATIONAL AND TECHNICAL SCHOOL), WENJIAO ROAD, LEDU DISTRICT, HAIDONG CITY, People's Republic of China ~72: CHEN, Yuanbiao;HAN, Lei;HAO, Rongrong;JIANG, Xiaoting;YANG, Jin~

2026/10473 ~ Complete ~54:A REAL-TIME YOGA POSTURE DETECTION AND CORRECTION SYSTEM WITH AI, OBJECT DETECTION AND DETERMINISTIC BIOMECHANICAL ANALYSIS ~71:Vishwakarma Institute of Technology, 666, UPPER MARKET RD, UPPER INDIRA NAGAR, BIBWEWADI, PUNE, MAHARASHTRA, 411037, India;Vishwakarma University, SURVEY NO 2 3, 4, KONDHWA MAIN RD, LAXMI NAGAR, BETAL NAGAR, KONDHWA, PUNE, MAHARASHTRA, 411048, India ~72: KHALDE, Pallavi;NAVANDAR, Pranav;RAUT, Vivek;SANGOLE, Om;THAKUR, Sujal;TOMAR, Pratham~

2026/10485 ~ Complete ~54:AN AI-BASED CROP DISEASE DETECTION SYSTEM USING DEEP LEARNING AND IMAGE PROCESSING ~71:VISHWAKARMA INSTITUTE OF TECHNOLOGY, 666, UPPER MARKET RD, UPPER INDIRA NAGAR, BIBWEWADI, PUNE, MAHARASHTRA, 411037, India;VISHWAKARMA UNIVERSITY, SURVEY NO 2 3, 4, KONDHWA MAIN RD, LAXMI NAGAR, BETAL NAGAR, KONDHWA, PUNE, MAHARASHTRA, 411048, India ~72: CHAUDHARI, Prasad;DEDGAONKAR, Suruchi;JAGTAP, Gaurav Yuvraj;KAVHAT, Narendra Rajendra;KHANDARE, Harshdeep Baburao;KONDHAWALE, Aditya Eknath~

2026/10489 ~ Complete ~54:A SMART WATER FLOW AND DRAINAGE MANAGEMENT SYSTEM USING IOT AND FUZZY LOGIC ~71:VISHWAKARMA INSTITUTE OF TECHNOLOGY, 666, UPPER MARKET RD, UPPER INDIRA NAGAR, BIBWEWADI, PUNE, MAHARASHTRA, 411037, India;VISHWAKARMA UNIVERSITY, SURVEY NO 2 3, 4, KONDHWA MAIN RD, LAXMI NAGAR, BETAL NAGAR, KONDHWA, PUNE, MAHARASHTRA, 411048, India ~72: KHUBCHANDANI, Jyoti;KHUBCHANDANI, Payal;LAWHALE, Niyal;PATIL, Om Sachin;PATIL, Omkar Atul;SOLASKAR, Om;VASHISHTH, Om~

2026/10539 ~ Complete ~54:SOLID FORM OF A QUINOLINE CARBOXAMIDE COMPOUND ~71:SYNGENTA CROP PROTECTION AG, Rosentalstrasse 67, BASEL 4058, SWITZERLAND, Switzerland ~72: HONE, John;KEATES, Adam~ 33:EP ~31:24179071.6 ~32:30/05/2024

2026/10470 ~ Complete ~54:A SMART MANUFACTURING OPTIMIZATION SYSTEM USING IOT, MACHINE LEARNING AND DIGITAL TWIN TECHNOLOGY ~71:Vishwakarma Institute of Technology, 666, UPPER MARKET RD, UPPER INDIRA NAGAR, BIBWEWADI, PUNE, MAHARASHTRA, 411037, India;Vishwakarma University, SURVEY NO 2 3, 4, KONDHWA MAIN RD, LAXMI NAGAR, BETAL NAGAR, KONDHWA, PUNE, MAHARASHTRA, 411048, India ~72: ANERAO, Prashant Ramchandra;SOMATKAR, Avinash Abhiman;WAWAGE, Pawan Subhash~

2026/10472 ~ Complete ~54:A NATURAL LANGUAGE PROCESSING BASED AI SYSTEM FOR SMART CLAUSE DETECTION AND SUMMARIZATION OF CONTRACTS ~71:VISHWAKARMA INSTITUTE OF TECHNOLOGY, 666, UPPER MARKET RD, UPPER INDIRA NAGAR, BIBWEWADI, PUNE, MAHARASHTRA, 411037, India;VISHWAKARMA UNIVERSITY, SURVEY NO 2 3, 4, KONDHWA MAIN RD, LAXMI NAGAR, BETAL NAGAR, KONDHWA, PUNE, MAHARASHTRA, 411048, India ~72: KASRALIKAR, Sharad Mahendra;KHILLARE, Harsh Vitthal;KULKARNI, Mayuresh Pravin;NARUTE, Shreya Suresh;PAWA, Poonam Yogesh~

2026/10498 ~ Complete ~54:A RESUME AND CODING PROFILE BASED PERSONALIZED INTERVIEW QUESTION RECOMMENDATION SYSTEM ~71:VISHWAKARMA INSTITUTE OF TECHNOLOGY, 666, UPPER MARKET RD, UPPER INDIRA NAGAR, BIBWEWADI, PUNE, MAHARASHTRA, 411037, India;VISHWAKARMA UNIVERSITY, SURVEY NO 2 3, 4, KONDHWA MAIN RD, LAXMI NAGAR, BETAL NAGAR, KONDHWA, PUNE, MAHARASHTRA, 411048, India ~72: KHUBCHANDANI, Jyoti Ashok;KHUBCHANDANI, Payal Ashok;PANJWANI, Harshita Dilip;PANPALIYA, Madhur Sanjay;PANSARE, Sarthak Vijay;PARDESHI, Parth Sanjay~

2026/10520 ~ Complete ~54:WATER WAVE ENERGY CONVERTER ~71:MAPANZURE, Alois, 1/72 Cockayne Crescent Sunnynook, Auckland, 0620, New Zealand ~72: MAPANZURE, Alois~ 33:NZ ~31:809718 ~32:02/04/2024

2026/10525 ~ Complete ~54:METHODS FOR REDUCING SYMPTOMS IN SUBJECTS SUFFERING FROM BRONCHIECTASIS AND OTHER PULMONARY DISEASES ~71:RENOVION, INC., 900 Martin Luther King, Jr. Blvd., Suite A, Chapel Hill, North Carolina, 27514, United States of America ~72: COPELAND, Dan;DURHAM, Carolyn~ 33:US ~31:63/640,839 ~32:30/04/2024

2026/10533 ~ Complete ~54:BTK DEGRADER AND USE THEREOF ~71:ASCENTAGE PHARMA (SUZHOU) CO., LTD., 68 Xinqing Road, Industrial Park, SUZHOU 215000, JIANGSU, CHINA (P.R.C.), People's Republic of China;ASCENTAGE PHARMA GROUP CORP LIMITED, Unit B, 17/F., United Centre, 95 Queensway, Admiralty, HONG KONG 999077, CHINA (P.R.C.), People's Republic of China ~72: CHEN, Jianyong;HU, Jiantao~ 33:IB ~31:2024/107865 ~32:26/07/2024;33:IB ~31:2024/136848 ~32:04/12/2024;33:IB ~31:2025/081389 ~32:07/03/2025

2026/10462 ~ Complete ~54:EXTENDED, HIGH DOSE VEGF ANTAGONIST REGIMENS FOR TREATMENT OF ANGIOGENIC EYE DISORDERS ~71:BAYER HEALTHCARE LLC, 100 Bayer Boulevard, Whippany, United States of America;REGENERON PHARMACEUTICALS, INC., 777 Old Saw Mill River Road, Tarrytown, United States of America ~72: ASMUS, Friedrich;BERLINER, Alyson J;CHU, Karen;DA SILVA LEAL, Sergio Casimiro;EISSING, Thomas;RITTENHOUSE, Kay D.;VITTI, Robert, L.~ 33:US ~31:63/189,541 ~32:17/05/2021;33:US ~31:63/235,398 ~32:20/08/2021;33:US ~31:63/297,420 ~32:07/01/2022;33:US ~31:63/306,315 ~32:03/02/2022

2026/10479 ~ Complete ~54:A FUZZY LOGIC-BASED INTELLIGENT WASTE MANAGEMENT SYSTEM USING SMART BINS ~71:VISHWAKARMA INSTITUTE OF TECHNOLOGY, 666, UPPER MARKET RD, UPPER INDIRA NAGAR, BIBWEWADI, PUNE, MAHARASHTRA, 411037, India;VISHWAKARMA UNIVERSITY, SURVEY NO 2 3, 4, KONDHWA MAIN RD, LAXMI NAGAR, BETAL NAGAR, KONDHWA, PUNE, MAHARASHTRA, 411048, India ~72: KHUBCHANDANI, Jyoti;KHUBCHANDANI, Payal;PABALKAR, Adit Sarang;PADMAN, Varad Rohit;PADWAL, Om Vinod;PADWAL, Pratyusha Abhijeet;PAGAR, Gaurav Popat~

2026/10493 ~ Complete ~54:AN AI-BASED ACOUSTIC ANOMALY DETECTION SYSTEM FOR PUBLIC SAFETY ~71:VISHWAKARMA INSTITUTE OF TECHNOLOGY, 666, UPPER MARKET RD, UPPER INDIRA NAGAR, BIBWEWADI, PUNE, MAHARASHTRA, 411037, India;VISHWAKARMA UNIVERSITY, SURVEY NO 2

3, 4, KONDHWA MAIN RD, LAXMI NAGAR, BETAL NAGAR, KONDHWA, PUNE, MAHARASHTRA, 411048, India ~72: CHOLKE, Puja Abhijeet;GAUTAM, Poorvi;PISE, Suraj Santosh;PITRUBHAKTA, Aayush Manohar;POL, Sharvari Shailendra~

2026/10496 ~ Complete ~54:AN IOT-BASED ADAPTIVE PREDICTIVE MAINTENANCE SYSTEM FOR INDUSTRIAL MOTORS USING MOTOR HEALTH FINGERPRINTING ~71:VISHWAKARMA INSTITUTE OF TECHNOLOGY, 666, UPPER MARKET RD, UPPER INDIRA NAGAR, BIBWEWADI, PUNE, MAHARASHTRA, 411037, India;VISHWAKARMA UNIVERSITY, SURVEY NO 2 3, 4, KONDHWA MAIN RD, LAXMI NAGAR, BETAL NAGAR, KONDHWA, PUNE, MAHARASHTRA, 411048, India ~72: PASHIKANTI, Rajesh Sadanandam;SHELKE, Sanchit Arjun;SHINDE, Bhushan Deven;SUTAR, Amey Gajanan;TAMBE, Om Rajendra~

2026/10503 ~ Complete ~54:A SYSTEM FOR CREDIT CARD FRAUD DETECTION AND PREVENTION USING MACHINE LEARNING ~71:VISHWAKARMA INSTITUTE OF TECHNOLOGY, 666, UPPER MARKET RD, UPPER INDIRA NAGAR, BIBWEWADI, PUNE, MAHARASHTRA, 411037, India;VISHWAKARMA UNIVERSITY, SURVEY NO 2 3, 4, KONDHWA MAIN RD, LAXMI NAGAR, BETAL NAGAR, KONDHWA, PUNE, MAHARASHTRA, 411048, India ~72: CHOLKE, Puja Abhijeet;KATKAR, Pavan Bhagwan;PAWAR, Krushna Nandalal;PAWAR, Ratnadeep Nanasaheb;PAWAR, Shreya Manohar~

2026/10513 ~ Complete ~54:A WATER QUALITY MONITORING SYSTEM USING AN EMD-DRIVEN CNN-LSTM HYBRID DEEP LEARNING ARCHITECTURE ~71:VISHWAKARMA INSTITUTE OF TECHNOLOGY, 666, UPPER MARKET RD, UPPER INDIRA NAGAR, BIBWEWADI, PUNE, MAHARASHTRA, 411037, India;VISHWAKARMA UNIVERSITY, SURVEY NO 2 3, 4, KONDHWA MAIN RD, LAXMI NAGAR, BETAL NAGAR, KONDHWA, PUNE, MAHARASHTRA, 411048, India ~72: BOBADE, Sandip Yuvraj;DHOTRE, Virendrakumar Anna;JOSHI, Hrushikesh Jaiwant;KALE, Rashmi Bhaskarrao;LONDHE, Aoudumber Dattatreya;MAHALLE, Parikshit Narendra;NAVALE, Geeta Sajjan;PISE, Ganesh Shivaji;RATHOD, Vijay Uttam;SABLE, Nilesh Popat~

2026/10514 ~ Complete ~54:A COGNITIVE AI FRAMEWORK FOR IMMERSIVE VIRTUAL INTERVIEW EVALUATION AND ADAPTIVE CANDIDATE ASSESSMENT ~71:VISHWAKARMA INSTITUTE OF TECHNOLOGY, 666, UPPER MARKET RD, UPPER INDIRA NAGAR, BIBWEWADI, PUNE, MAHARASHTRA, 411037, India;VISHWAKARMA UNIVERSITY, SURVEY NO 2 3, 4, KONDHWA MAIN RD, LAXMI NAGAR, BETAL NAGAR, KONDHWA, PUNE, MAHARASHTRA, 411048, India ~72: BATHE, Rupali Rajaram;LAD, Prem Navin;LOHAR, Dhruv Madanlal;MAKODE, Anushka Shyam;MALI, Purva Amarnath;MATE, Anuja Dinesh~

2026/10529 ~ Complete ~54:NEUROMODULATION PLATFORM ~71:PARASYM LTD, 4th Floor, 18 St Cross Street, LONDON EC1N 8UN, UNITED KINGDOM, United Kingdom ~72: DUNDOVIC, Nathan;DUNDOVIC, Sophie~ 33:AU ~31:2024901284 ~32:03/05/2024

2026/10535 ~ Complete ~54:REACTIVE WORKING FLUIDS FOR CYCLIC THERMODYNAMIC CONVERSION MACHINES AND CYCLIC THERMODYNAMIC CONVERSION MACHINES COMPRISING SAID WORKING FLUID ~71:CENTRE NATIONAL DE LA RECHERCHE SCIENTIFIQUE, 3, rue Michel Ange, PARIS 75016, FRANCE, France;UNIVERSITE DE LORRAINE, 34 Cours Léopold, NANCY 54000, FRANCE, France ~72: HADJADJ, Rachid;HERBINET, Olivier;LASALA, Silvia;VILAS BOAS, Sérgio~ 33:EP ~31:24305800.5 ~32:22/05/2024

2026/10508 ~ Complete ~54:A SMART MOTORCYCLE SAFETY SYSTEM AND ANTI-THEFT MONITORING SYSTEM ~71:VISHWAKARMA INSTITUTE OF TECHNOLOGY, 666, UPPER MARKET RD, UPPER INDIRA NAGAR, BIBWEWADI, PUNE, MAHARASHTRA, 411037, India;VISHWAKARMA UNIVERSITY, SURVEY NO 2 3, 4, KONDHWA MAIN RD, LAXMI NAGAR, BETAL NAGAR, KONDHWA, PUNE, MAHARASHTRA, 411048,

India ~72: BHARSAKADE, Ramkrishna Shantilal;GUPTA, Jalaj;JAVANE, Soham Sandip;JAWKAR, Samarth Prakash;JOSHI, Kalpeshvinayak;PAWAR, Jai Suresh~

2026/10524 ~ Complete ~54:METHODS AND APPARATUS FOR RANDOM ACCESS IN AMBIENT INTERNET OF THINGS (AIOT) SYSTEMS ~71:INTERDIGITAL PATENT HOLDINGS, INC., 200 Bellevue Parkway, Suite 300, Wilmington, Delaware, 19809, United States of America ~72: BALA, Erdem;FREDA, Martino;HONG, Jongwoo;KOIRALA, Remun;LEE, Moon IL;MARINIER, Paul;MARTIN, Brian~ 33:US ~31:18/656,530 ~32:06/05/2024

2026/10532 ~ Complete ~54:CONTACT LENS PRODUCT ~71:PEGAVISION CORPORATION, 2F-1, NO. 5, SHING YEH ST., GUISHAN DIST., TAOYUAN CITY 333, TAIWAN, CHINA (P.R.C.), People's Republic of China ~72: CHEN, Po-Chun;HUANG, Yi-Fang;LAI, Zhi-wei~

2026/10469 ~ Complete ~54:AN IOT-BASED ACCESS-CONTROLLED SYSTEM FOR EXPIRED MEDICINES ~71:VISHWAKARMA INSTITUTE OF TECHNOLOGY, 666, UPPER MARKET RD, UPPER INDIRA NAGAR, BIBWEWADI, PUNE, MAHARASHTRA, 411037, India;VISHWAKARMA UNIVERSITY, SURVEY NO 2 3, 4, KONDHWA MAIN RD, LAXMI NAGAR, BETAL NAGAR, KONDHWA, PUNE, MAHARASHTRA, 411048, India ~72: CHAVAN, Rohini Abhijeet;TANDLE, Disha Pandit;THAG, Samiksha Sudhakar;THETE, Samruddhi Anil;VEDPATHAK, Shraddha Shailendra~

2026/10482 ~ Complete ~54:A CHARACTER-LEVEL NEURAL NETWORK SYSTEM FOR LOW-RESOURCE AUTHORSHIP STYLE TRANSFER ~71:VISHWAKARMA INSTITUTE OF TECHNOLOGY, 666, UPPER MARKET RD, UPPER INDIRA NAGAR, BIBWEWADI, PUNE, MAHARASHTRA, 411037, India;VISHWAKARMA UNIVERSITY, SURVEY NO 2 3, 4, KONDHWA MAIN RD, LAXMI NAGAR, BETAL NAGAR, KONDHWA, PUNE, MAHARASHTRA, 411048, India ~72: AADEP, Divya;DEVARE, Namrata;GAMBHIRE, Gajanan;KADAM, Harshita;KAMAT, Swanandi;MORE, Priyanka~

2026/10500 ~ Complete ~54:A BLOCKCHAIN-POWERED TRACEABILITY AND AI-VERIFIED AUTHENTICATION SYSTEM FOR BOTANICAL SUPPLY CHAINS ~71:VISHWAKARMA INSTITUTE OF TECHNOLOGY, 666, UPPER MARKET RD, UPPER INDIRA NAGAR, BIBWEWADI, PUNE, MAHARASHTRA, 411037, India;VISHWAKARMA UNIVERSITY, SURVEY NO 2 3, 4, KONDHWA MAIN RD, LAXMI NAGAR, BETAL NAGAR, KONDHWA, PUNE, MAHARASHTRA, 411048, India ~72: KALLAWAR, Prapti Vinod;PATIL, Prathamesh Satappa;PUSHKRAJ, Shivadey Yukta;SALUNKE, Shravani Sanjay;SALUNKHE, Soham Santosh;SHELKE, Priya Makarand;SORTE, Prachi Kamlesh~

2026/10502 ~ Complete ~54:A REAL-TIME CRICKET MATCH OUTCOME PREDICTION SYSTEM USING PHASE-SEGREGATED ENSEMBLE MACHINE LEARNING AND LIVE API SYNCHRONIZATION ~71:VISHWAKARMA INSTITUTE OF TECHNOLOGY, 666, UPPER MARKET RD, UPPER INDIRA NAGAR, BIBWEWADI, PUNE, MAHARASHTRA, 411037, India;VISHWAKARMA UNIVERSITY, SURVEY NO 2 3, 4, KONDHWA MAIN RD, LAXMI NAGAR, BETAL NAGAR, KONDHWA, PUNE, MAHARASHTRA, 411048, India ~72: CHAUDHARI, Prasad B.;HIROLIKAR, Ojas;NALWADE, Yash Anil;PAWAR, Trunal;SHELKE, Priya M.~

2026/10471 ~ Complete ~54:A MORPHOLOGY AWARE DEEP LEARNING SYSTEM FOR PLANT DISEASE DETECTION ~71:VISHWAKARMA INSTITUTE OF TECHNOLOGY, 666, UPPER MARKET RD, UPPER INDIRA NAGAR, BIBWEWADI, PUNE, MAHARASHTRA, 411037, India;VISHWAKARMA UNIVERSITY, SURVEY NO 2 3, 4, KONDHWA MAIN RD, LAXMI NAGAR, BETAL NAGAR, KONDHWA, PUNE, MAHARASHTRA, 411048, India ~72: KALE, Rashmi Bhaskarrao;KIMBAHUNE, Vinod Vijaykumar;KOKANE, Chandrkant Dilip;LONDHE, Aoudumber Dattatray;MAHALLE, Parikshit Narendra;NAVALE, Geeta Sajjan;PISE, Ganesh Shivaji;SHINDE, Sandip R.~

2026/10474 ~ Complete ~54:A GEO-INTELLIGENT SYSTEM FOR IDENTIFYING, PREDICTING, AND MITIGATING URBAN HEAT ISLAND EFFECTS ~71:Vishwakarma Institute of Technology, 666, UPPER MARKET RD, UPPER INDIRA NAGAR, BIBWEWADI, PUNE, MAHARASHTRA, 411037, India;Vishwakarma University, SURVEY NO 2 3, 4, KONDHWA MAIN RD, LAXMI NAGAR, BETAL NAGAR, KONDHWA, PUNE, MAHARASHTRA, 411048, India ~72: BEDWAL, Aniket Dineshsing;CHAKOTE, Gauravi Vinod;DHOBALE, Chaitanya Gurnna;GUJARATHI, Rushi Raviraj;KOKANE, Chandrakant Deelip;SABLE, Nilesh P.;WATH, Swarai Chandrashekhar~

2026/10475 ~ Complete ~54:AN AI-POWERED CODING ASSESSMENT PLATFORM ~71:VISHWAKARMA INSTITUTE OF TECHNOLOGY, 666, UPPER MARKET RD, UPPER INDIRA NAGAR, BIBWEWADI, PUNE, MAHARASHTRA, 411037, India;VISHWAKARMA UNIVERSITY, SURVEY NO 2 3, 4, KONDHWA MAIN RD, LAXMI NAGAR, BETAL NAGAR, KONDHWA, PUNE, MAHARASHTRA, 411048, India ~72: KSHRISAGAR, Asawari;KUTE, Anuja;MAHALLE, Parikshit;PATIL, Ratna;PATTANSHETTI, Shantanu;PAWAR, Ratnali;VARDE, Sahil;YADAV, Gitanjali~

2026/10480 ~ Complete ~54:A LIDAR-ASSISTED ADAPTIVE PREDICTIVE RISK MONITORING SYSTEM FOR INDUSTRIAL SAFETY ~71:VISHWAKARMA INSTITUTE OF TECHNOLOGY, 666, UPPER MARKET RD, UPPER INDIRA NAGAR, BIBWEWADI, PUNE, MAHARASHTRA, 411037, India;VISHWAKARMA UNIVERSITY, SURVEY NO 2 3, 4, KONDHWA MAIN RD, LAXMI NAGAR, BETAL NAGAR, KONDHWA, PUNE, MAHARASHTRA, 411048, India ~72: MUSALE, Prajakta Prakash;PATIL, Prajakta Subhash;SURYAWANSHI, Ranjeetsingh Shahajirao;THOPATE, Kaushalya Vaibhav~

2026/10483 ~ Complete ~54:AN IOT-BASED INTEGRATED SMART HEALTHCARE MONITORING SYSTEM FOR AUTOMATED MEDICINE REMINDERS AND REAL-TIME HYDRATION TRACKING ~71:VISHWAKARMA INSTITUTE OF TECHNOLOGY, 666, UPPER MARKET RD, UPPER INDIRA NAGAR, BIBWEWADI, PUNE, MAHARASHTRA, 411037, India;VISHWAKARMA UNIVERSITY, SURVEY NO 2 3, 4, KONDHWA MAIN RD, LAXMI NAGAR, BETAL NAGAR, KONDHWA, PUNE, MAHARASHTRA, 411048, India ~72: KUMAR, Shlok Ravi;MUNDE, Shravani Sugriv;PATIL, Ratna Nitin;PRATAPSINGH, Shivangi Marmat;VISHWANATH, Shivapnor Vinay~

2026/10487 ~ Complete ~54:A HARDWARE-ACCELERATED PRE-TRADE RISK ANALYSIS ENGINE FOR LOW-LATENCY INTERCEPTION USING MACHINE LEARNING ~71:VISHWAKARMA INSTITUTE OF TECHNOLOGY, 666, UPPER MARKET RD, UPPER INDIRA NAGAR, BIBWEWADI, PUNE, MAHARASHTRA, 411037, India;VISHWAKARMA UNIVERSITY, SURVEY NO 2 3, 4, KONDHWA MAIN RD, LAXMI NAGAR, BETAL NAGAR, KONDHWA, PUNE, MAHARASHTRA, 411048, India ~72: DAGADE, Rahul Vardhaman;KADAM, Priyanka Amol;SONAWANE, Sanskar Narayan;SONI, Swikruti Mahesh;SONJE, Atharva Sangram;SONTAKKE, Pranay Dilip;SURVE, Vishwajeet Sunil~

2026/10492 ~ Complete ~54:AN AI-BASED SMART TOURIST SAFETY MONITORING AND INCIDENT RESPONSE SYSTEM USING GEO-FENCING AND BLOCKCHAIN ~71:VISHWAKARMA INSTITUTE OF TECHNOLOGY, 666, UPPER MARKET RD, UPPER INDIRA NAGAR, BIBWEWADI, PUNE, MAHARASHTRA, 411037, India;VISHWAKARMA UNIVERSITY, SURVEY NO 2 3, 4, KONDHWA MAIN RD, LAXMI NAGAR, BETAL NAGAR, KONDHWA, PUNE, MAHARASHTRA, 411048, India ~72: KHANDELWAL, Laksh Rahul;KULWAL, Sharvani Nagesh;KUSHWAHA, Siddartha Dhananjai;LADDHA, Sneha Deepak;LANDGE, Pranav Rajendra;PATIL, Ratna Nitin~

2026/10495 ~ Complete ~54:A HEART DISEASE PREDICTION FRAMEWORK ~71:VISHWAKARMA INSTITUTE OF TECHNOLOGY, 666, UPPER MARKET RD, UPPER INDIRA NAGAR, BIBWEWADI, PUNE, MAHARASHTRA, 411037, India;VISHWAKARMA UNIVERSITY, SURVEY NO 2 3, 4, KONDHWA MAIN RD, LAXMI NAGAR, BETAL NAGAR, KONDHWA, PUNE, MAHARASHTRA, 411048, India ~72: KALE, Rashmi

Bhaskarrao;KIMBAHUNE, Vinod Vijaykumar;KOKANE, Chandrkant Dilip;LONDHE, Aoudumber Dattatray;MAHALLE, Parikshit Narendra;NAVALE, Geeta Sajjan;PISE, Ganesh Shivaji;SHINDE, Sandip R.~

2026/10509 ~ Complete ~54:A GRADE-AWARE MULTIMODAL RETRIEVAL-AUGMENTED EDUCATIONAL QUESTION ANSWERING SYSTEM ~71:VISHWAKARMA INSTITUTE OF TECHNOLOGY, 666, UPPER MARKET RD, UPPER INDIRA NAGAR, BIBWEWADI, PUNE, MAHARASHTRA, 411037, India;VISHWAKARMA UNIVERSITY, SURVEY NO 2 3, 4, KONDHWA MAIN RD, LAXMI NAGAR, BETAL NAGAR, KONDHWA, PUNE, MAHARASHTRA, 411048, India ~72: GAMBHIRE, Gajanan;MORE, Priyanka;RAWAL, Shrey;SANKPAL, Shravan~

2026/10515 ~ Complete ~54:AN AI-DRIVEN ADAPTIVE SMART ROOM AUTOMATION AND SAFETY SYSTEM USING MULTI-SENSOR FUSION AND IOT ~71:VISHWAKARMA INSTITUTE OF TECHNOLOGY, 666, UPPER MARKET RD, UPPER INDIRA NAGAR, BIBWEWADI, PUNE, MAHARASHTRA, 411037, India;VISHWAKARMA UNIVERSITY, SURVEY NO 2 3, 4, KONDHWA MAIN RD, LAXMI NAGAR, BETAL NAGAR, KONDHWA, PUNE, MAHARASHTRA, 411048, India ~72: JADHAV, Rohini S.;KHADE, Harshal Parshuram;THOPTE, Kaushalya~

2026/10519 ~ Complete ~54:SANITARY SYSTEM ~71:GROHEDAL SANITAERSYSTEME GMBH, Zur Porta 8-12, Germany ~72: STAHLHUT, Ulrich;ÖNDER, Erkan~ 33:DE ~31:10 2024 118 696.8 ~32:02/07/2024;33:WO ~31:PCT/EP2025/064174 ~32:22/05/2025

2026/10522 ~ Complete ~54:FUEL CELL SYSTEM COMPRISING A FUEL CELL STACK AND A REFORMER ~71:POWERCELL SWEDEN AB, Ruskvädersgatan 12, Sweden ~72: BURGREN, Johan;SALEMAN, Thomas~ 33:SE ~31:2430253-1 ~32:03/05/2024

2026/10531 ~ Complete ~54:FUNGICIDAL COMBINATIONS ~71:UPL MAURITIUS LIMITED, 6th Floor, Suite 157B, Harbor Front Building, President John Kennedy Street, PORT LOUIS, MAURITIUS, Mauritius ~72: CAMARGO, Ricardo;RODRIGUES, Ronaldo;ZONATO, Jean~ 33:IN ~31:202411036056 ~32:07/05/2024

2026/10468 ~ Complete ~54:AN INTEGRATED AI-IOT SYSTEM FOR REAL-TIME CROWD SAFETY MONITORING AND FALL DETECTION ~71:VISHWAKARMA INSTITUTE OF TECHNOLOGY, 666, UPPER MARKET RD, UPPER INDIRA NAGAR, BIBWEWADI, PUNE, MAHARASHTRA, 411037, India;VISHWAKARMA UNIVERSITY, SURVEY NO 2 3, 4, KONDHWA MAIN RD, LAXMI NAGAR, BETAL NAGAR, KONDHWA, PUNE, MAHARASHTRA, 411048, India ~72: MUSALE, Prajakta Prakash;PARKHE, Dhawal Narendra;SURYAWANSHI, Ranjeetsingh Shahajirao;THOPATE, Kaushalya Vaibhav~

2026/10484 ~ Complete ~54:A SYSTEM FOR EMPLOYEE PERFORMANCE PREDICTION AND PERSONALIZED TRAINING RECOMMENDATION USING HYBRID EXPLAINABLE AI ~71:Vishwakarma Institute of Technology, 666, UPPER MARKET RD, UPPER INDIRA NAGAR, BIBWEWADI, PUNE, MAHARASHTRA, 411037, India;Vishwakarma University, SURVEY NO 2 3, 4, KONDHWA MAIN RD, LAXMI NAGAR, BETAL NAGAR, KONDHWA, PUNE, MAHARASHTRA, 411048, India ~72: CHOUDHARY, Nimita Sanjeev Kumar;KUNEKAR, Pankaj;NARLAWAR, Vedika Pravin;PADATE, Gargi Sitaram;PAGARIYA, Arham Paresh;SHARMA, Nidhi~

2026/10505 ~ Complete ~54:A WEB-BASED INTELLIGENT GROUND CONTROL SYSTEM FOR UNDERWATER ROV INSPECTION ~71:VISHWAKARMA INSTITUTE OF TECHNOLOGY, 666, UPPER MARKET RD, UPPER INDIRA NAGAR, BIBWEWADI, PUNE, MAHARASHTRA, 411037, India;VISHWAKARMA UNIVERSITY, SURVEY NO 2 3, 4, KONDHWA MAIN RD, LAXMI NAGAR, BETAL NAGAR, KONDHWA, PUNE, MAHARASHTRA, 411048, India ~72: DAGADE, Rahul;KADAM, Priyanka;KIMBAHUNE, Vinod;PAWAR, Soham Dilip;SHIND, Sudhakar Ramhari;SWAM, Samarth Shivprasad;TALE, Tanmai Shivhari~

2026/10511 ~ Complete ~54:A WEB-BASED AUTOMATED EXAMINATION SEATING ARRANGEMENT OPTIMIZATION SYSTEM ~71:Vishwakarma Institute of Technology, 666, UPPER MARKET RD, UPPER INDIRA NAGAR, BIBWEWADI, PUNE, MAHARASHTRA, 411037, India;Vishwakarma University, SURVEY NO 2 3, 4, KONDHWA MAIN RD, LAXMI NAGAR, BETAL NAGAR, KONDHWA, PUNE, MAHARASHTRA, 411048, India ~72: BAM, Shlok;CHULLIYAN, Shreyas;KHALDE, Pallavi;SAWANT, Avantika;SHINDE, Samruddhi;SOMAN, Ishan~

2026/10530 ~ Complete ~54:COMPOSITIONS FOR ENHANCED PHOTOSYNTHESIS ~71:SABIC AGRI-NUTRIENTS COMPANY, 6575 Airport Road, RIYADH 13244, SAUDI ARABIA, Saudi Arabia ~72: ABDALLAH, Radwan;KORIPELLY, Rajamalleswaramma;MOHAMED, Saqeebulla H.~ 33:EP ~31:24173663.6 ~32:01/05/2024

2026/10538 ~ Complete ~54:AIR FILTER ASSEMBLY ~71:BREATHESAFE PTY LTD, 62 Mica Street, Carole Park, QUEENSLAND 4300, AUSTRALIA, Australia ~72: FRANCIS CLAR, Julio;JOHNSTONE (Deceased), Nicholas~ 33:AU ~31:2024902193 ~32:15/07/2024

2026/10540 ~ Complete ~54:MNK INHIBITORS FOR TREATING RHEUMATOID ARTHRITIS ~71:4E THERAPEUTICS, INC., 3800 N. Lamar Blvd., Suite 200, AUSTIN 78756, TX, USA, United States of America ~72: ERNFORS, Johan Patrik;SU, Jie~ 33:US ~31:63/669,549 ~32:10/07/2024;33:US ~31:63/711,884 ~32:25/10/2024

2026/10544 ~ Complete ~54:DUAL-TOXIN ANTIBODY-DRUG CONJUGATE AND PHARMACEUTICAL USE THEREOF ~71:PHRONTLINE BIOPHARMA (HANGZHOU) CO., LTD., Room 338, Floor 3, Building 1, 502 Linping Avenue, Donghu Street, Linping District, Hangzhou, Zhejiang, 311103, People's Republic of China;PHRONTLINE BIOPHARMA CO., LTD, 2nd Floor, Area A, 420 Fenglin Road, Xuhui District, Shanghai, 200032, People's Republic of China ~72: CHEN, Zhaoyuan;MAO, Yanli;QI, Li~ 33:CN ~31:202411961922.9 ~32:27/12/2024

2026/10458 ~ Provisional ~54:MODULAR HOLDER SYSTEM FOR INTERCHANGEABLE MARKER INSERTS ~71:Juan Marais, 126 Koos de la Rey Street, South Africa ~72: Juan Marais~

2026/10478 ~ Complete ~54:AN AI-DRIVEN TRIGGER-ACTION AUTOMATION SYSTEM WITH BEHAVIOURAL LEARNING AND COMMUNITY EXTENSIBILITY ~71:VISHWAKARMA INSTITUTE OF TECHNOLOGY, 666, UPPER MARKET RD, UPPER INDIRA NAGAR, BIBWEWADI, PUNE, MAHARASHTRA, 411037, India;VISHWAKARMA UNIVERSITY, SURVEY NO 2 3, 4, KONDHWA MAIN RD, LAXMI NAGAR, BETAL NAGAR, KONDHWA, PUNE, MAHARASHTRA, 411048, India ~72: CHOLKE, Puja;DANDGE, Prathmesh;HAMBIRE, Prathmesh;NAGARE, Prathmesh;SATARKAR, Pratyush;TIWARI, Prasant~

2026/10481 ~ Complete ~54:A BLOCKCHAIN-BASED LAND REGISTRATION SYSTEM FOR SECURE, TRANSPARENT AND FRAUD-RESISTANT PROPERTY TRANSACTIONS ~71:VISHWAKARMA INSTITUTE OF TECHNOLOGY, 666, UPPER MARKET RD, UPPER INDIRA NAGAR, BIBWEWADI, PUNE, MAHARASHTRA, 411037, India;VISHWAKARMA UNIVERSITY, SURVEY NO 2 3, 4, KONDHWA MAIN RD, LAXMI NAGAR, BETAL NAGAR, KONDHWA, PUNE, MAHARASHTRA, 411048, India ~72: GHUGE, Rushikesh Sham;HANGARGE, Tushar David;JADHAV, Rohini Shekhar;JADHAV, Udayan Sanjay;JAISWAL, Om Vijay~

2026/10486 ~ Complete ~54:A MULTI-SCALE AI-DRIVEN SMART GRID LOAD OPTIMIZATION WITH ADAPTIVE IOT-BASED DEMAND RESPONSE ~71:VISHWAKARMA INSTITUTE OF TECHNOLOGY, 666, UPPER MARKET RD, UPPER INDIRA NAGAR, BIBWEWADI, PUNE, MAHARASHTRA, 411037, India;VISHWAKARMA UNIVERSITY, SURVEY NO 2 3, 4, KONDHWA MAIN RD, LAXMI NAGAR, BETAL NAGAR, KONDHWA, PUNE, MAHARASHTRA, 411048, India ~72: AGRAWAL, Harsh;DESHPANDE, Rupali;HARSH;PAWAR, Harshwardhan;TAPADE, Harshal~

2026/10490 ~ Complete ~54:AN INTELLIGENT INVENTORY MANAGEMENT SYSTEM USING STOCK ANALYSIS WITH MACHINE LEARNING AND DATA ANALYTICS ~71:Vishwakarma Institute of Technology, 666, UPPER MARKET RD, UPPER INDIRA NAGAR, BIBWEWADI, PUNE, MAHARASHTRA, 411037, India;Vishwakarma University, SURVEY NO 2 3, 4, KONDHWA MAIN RD, LAXMI NAGAR, BETAL NAGAR, KONDHWA, PUNE, MAHARASHTRA, 411048, India ~72: BOTE, Sarthak;CHATTERJEE, Avantika;KUNEKAR, Pankaj;QASEM, Abduljalil;SIDAM, Aditi;UKE, Bhuvan~

2026/10504 ~ Complete ~54:AN EDGE COMPUTING SYSTEM FOR HANDWRITTEN MATHEMATICS SYSTEM IN MARATHI LANGUAGE ~71:VISHWAKARMA INSTITUTE OF TECHNOLOGY, 666, UPPER MARKET RD, UPPER INDIRA NAGAR, BIBWEWADI, PUNE, MAHARASHTRA, 411037, India;VISHWAKARMA UNIVERSITY, SURVEY NO 2 3, 4, KONDHWA MAIN RD, LAXMI NAGAR, BETAL NAGAR, KONDHWA, PUNE, MAHARASHTRA, 411048, India ~72: AGARWAL, Daksh Vikram;GUPTA, Archit;KADAM, Prema;KUMAR, Santosh;MAHALLE, Parikshit;NARAYANKERI, Samihan Laxman;PAWAR, Pratik Ramchandra;YADAV, Gitanjali~

2026/10506 ~ Complete ~54:A MULTI-MODAL AI SYSTEM FOR CLIMATE PREDICTION AND ENVIRONMENTAL MONITORING ~71:VISHWAKARMA INSTITUTE OF TECHNOLOGY, 666, UPPER MARKET RD, UPPER INDIRA NAGAR, BIBWEWADI, PUNE, MAHARASHTRA, 411037, India;VISHWAKARMA UNIVERSITY, SURVEY NO 2 3, 4, KONDHWA MAIN RD, LAXMI NAGAR, BETAL NAGAR, KONDHWA, PUNE, MAHARASHTRA, 411048, India ~72: DIXIT, Shruti Dilip;DUBE, Payal Suresh;GAIKWAD, Vaishnavi Ashok;HERLE, Shravani Deepak;INGALE, Sakshi Mahesh;LONDHE, Aoudumber Dattatreya;PISE, Ganesh Shivaji~

2026/10536 ~ Complete ~54:LIPID COMPOSITIONS AND METHODS OF USE THEREOF ~71:CAMURUS AB, Rydbergs Torg 4, LUND SE-224 84, SWEDEN, Sweden ~72: JOHNSSON, Markus;NISTOR, Catalin;TIBERG, Fredrik~ 33:SE ~31:2430251-5 ~32:02/05/2024;33:SE ~31:2430585-6 ~32:19/11/2024

2026/10543 ~ Complete ~54:CANNABIDIOL COMPOSITIONS FOR ANXIETY DISORDERS ~71:LEIUTIS PHARMACEUTICALS LLP, Plot no. 23, TIE 1st Phase, Balanagar, HYDERABAD 500037, TELANGANA, INDIA, India ~72: AKULA, Srinath;BANDA, Nagaraju;KOCHERLAKOTA, Chandrashekhar;NARALA, Arjun;PULLAGURA, Naga Udaya Sankar~ 33:IN ~31:202441028160 ~32:05/04/2024

2026/10501 ~ Complete ~54:A CONFIDENCE-GATED MULTI-TIER ARCHITECTURE FOR REAL-TIME FRAUD DETECTION IN HIGH-VOLUME PAYMENT SYSTEMS ~71:VISHWAKARMA INSTITUTE OF TECHNOLOGY, 666, UPPER MARKET RD, UPPER INDIRA NAGAR, BIBWEWADI, PUNE, MAHARASHTRA, 411037, India;VISHWAKARMA UNIVERSITY, SURVEY NO 2 3, 4, KONDHWA MAIN RD, LAXMI NAGAR, BETAL NAGAR, KONDHWA, PUNE, MAHARASHTRA, 411048, India ~72: BATHE, Rupali Rajaram;LAD, Prem Navin;LOHAR, Dhruv Madanlal;MAKODE, Anushka Shyam;MALI, Purva Amarnath;MATE, Anuja Dinesh~

2026/10507 ~ Complete ~54:A MULTI-AGENT ARTIFICIAL INTELLIGENCE SYSTEM FOR AUTOMATED LEGAL ANALYSIS, MULTILINGUAL RETRIEVAL-AUGMENTED GENERATION AND KNOWLEDGE GRAPH INTEGRATION INTELLIGENCE ~71:VISHWAKARMA INSTITUTE OF TECHNOLOGY, 666, UPPER MARKET RD, UPPER INDIRA NAGAR, BIBWEWADI, PUNE, MAHARASHTRA, 411037, India;VISHWAKARMA UNIVERSITY, SURVEY NO 2 3, 4, KONDHWA MAIN RD, LAXMI NAGAR, BETAL NAGAR, KONDHWA, PUNE, MAHARASHTRA, 411048, India ~72: DETROJA, Harsh Lalit;GUPTA, Shivam Sunil;HEDAOO, Akash Sunil;HEGDE, Ashik Ajith;JADHAV, Ganesh D.;JADHAV, Neeraj Nilesh~

2026/10510 ~ Complete ~54:A SMART IOT-BASED ENERGY EFFICIENT LIGHTING SYSTEM USING ESP32 ~71:VISHWAKARMA INSTITUTE OF TECHNOLOGY, 666, UPPER MARKET RD, UPPER INDIRA NAGAR, BIBWEWADI, PUNE, MAHARASHTRA, 411037, India;VISHWAKARMA UNIVERSITY, SURVEY NO 2 3, 4, KONDHWA MAIN RD, LAXMI NAGAR, BETAL NAGAR, KONDHWA, PUNE, MAHARASHTRA, 411048, India

~72: MUSALE, Prajakta Prakash;PANDIT, Aadit;SURYAWANSHI, Ranjeetsingh Shahajirao;THOPATE, Kaushalya Vaibhav~

2026/10528 ~ Complete ~54:INDANOL SUBSTITUTED DIAMINO PYRIMIDINE CARBOXAMIDES AS DUAL ATM/DNA-PK INHIBITORS ~71:BUGWORKS RESEARCH, INC., 2711 Centerville Road, Suite 400, WILMINGTON 19808, DE, USA, United States of America ~72: KAJIPALYA RANGANATHA RAO, Ranga Rao;KATAGIHALLIMATH, Nainesh;KAUSHIK KOTAKONDA, Harish;NAIK S, Rashmi;PEER MOHAMED, Shahul Hameed;PILLAI, Dhanashree;REDDY, Sambasiva;SHARMA, Sreevalli;VENKATESAN, Suryanarayanan~ 33:IN ~31:202441032214 ~32:23/04/2024

2026/10537 ~ Complete ~54:BISPECIFIC ANTIBODY, ANTIBODY-DRUG CONJUGATE, AND APPLICATION THEREOF ~71:PHRONTLINE BIOPHARMA (HANGZHOU) CO., LTD., Room 338, Floor 3, Building 1, 502 Linping Avenue, Donghu Street, Linping District, HANGZHOU 311103, ZHEJIANG, CHINA (P.R.C.), People's Republic of China ~72: CHEN, Zhaoyuan;HU, Siyi;MAO, Yanli;QI, Li~ 33:CN ~31:202411440745.X ~32:15/10/2024;33:CN ~31:202511383622.1 ~32:25/09/2025

2026/10457 ~ Provisional ~54:MULTI-FUNCTIONAL CAM AND DOWEL JIG ~71:Frans Jooste, 8 Lady Smith Street, South Africa ~72: Frans Jooste~

2026/10465 ~ Complete ~54:READY-TO-USE AQUEOUS INJECTABLE FLUCYTOSINE SOLUTION ~71:CIPLA LIMITED, Cipla House, Peninsula Business Park,, India ~72: BHADAURIA, Pradeep;BHAMARE, Vaibhavraj Ravsaheb;CHAVAN, Tushar Rajaram;DESHPANDE, Meghana;JOSHI, Hemant;KALIAPERUMAL, Arunprasath;REBELLO, Celestine Juliet;YASVANTH, Ashokraj~ 33:IN ~31:202521104974 ~32:30/10/2025

2026/10477 ~ Complete ~54:A SYSTEM FOR AUTO-VALIDATING SOFTWARE TASK FLOW GENERATION USING DUAL-LAYER ARTIFICIAL INTELLIGENCE ~71:VISHWAKARMA INSTITUTE OF TECHNOLOGY, 666, UPPER MARKET RD, UPPER INDIRA NAGAR, BIBWEWADI, PUNE, MAHARASHTRA, 411037, India;VISHWAKARMA UNIVERSITY, SURVEY NO 2 3, 4, KONDHWA MAIN RD, LAXMI NAGAR, BETAL NAGAR, KONDHWA, PUNE, MAHARASHTRA, 411048, India ~72: JADHAV, Ganesh Dashrath;PAWAR, Pratimesh Jankiram;PAWAR, Vaishnavi Ravindra;POTE, Rutuja Vaijanath;SAHU, Pragati;SISODIYA, Rajveersingh Manojsingh~

2026/10488 ~ Complete ~54:A MULTI-RELIGIOUS WISDOM SYSTEM WITH FIREBASE AUTHENTICATION AND CLOUD STORAGE ~71:VISHWAKARMA INSTITUTE OF TECHNOLOGY, 666, UPPER MARKET RD, UPPER INDIRA NAGAR, BIBWEWADI, PUNE, MAHARASHTRA, 411037, India;VISHWAKARMA UNIVERSITY, SURVEY NO 2 3, 4, KONDHWA MAIN RD, LAXMI NAGAR, BETAL NAGAR, KONDHWA, PUNE, MAHARASHTRA, 411048, India ~72: AMUNE, Amruta;DANGE, Varsha;GAUTAM, Mohit Ramesh;HIWASE, Tanishq Rajesh;HOL, Sanket Ajay;KHODE, Atharva Vijay;RAJGURU, Abhijeet Bhimrao~

2026/10491 ~ Complete ~54:AN AUTONOMOUS INDUSTRIAL PROCESS OPTIMIZATION SYSTEM USING EXPLAINABLE ARTIFICIAL INTELLIGENCE AND MULTI-OBJECTIVE OPTIMIZATION ~71:VISHWAKARMA INSTITUTE OF TECHNOLOGY, 666, UPPER MARKET RD, UPPER INDIRA NAGAR, BIBWEWADI, PUNE, MAHARASHTRA, 411037, India;VISHWAKARMA UNIVERSITY, SURVEY NO 2 3, 4, KONDHWA MAIN RD, LAXMI NAGAR, BETAL NAGAR, KONDHWA, PUNE, MAHARASHTRA, 411048, India ~72: ANERAO, Prashant Ramchandra;SOMATKAR, Avinash Abhiman;WAWAGE, Pawan~

2026/10497 ~ Complete ~54:A FINGERPRINT-BASED TWO-WHEELER LOCK AND THEFT PREVENTION SYSTEM ~71:VISHWAKARMA INSTITUTE OF TECHNOLOGY, 666, UPPER MARKET RD, UPPER INDIRA NAGAR, BIBWEWADI, PUNE, MAHARASHTRA, 411037, India;VISHWAKARMA UNIVERSITY, SURVEY NO 2 3, 4, KONDHWA MAIN RD, LAXMI NAGAR, BETAL NAGAR, KONDHWA, PUNE, MAHARASHTRA, 411048,

India ~72: GABHANE, Kshitij;GADAM, Riya;GADEWAR, Saumya;GAHUKAR, Shubham P.;GAMBHIRE, Gajanan;MAHALLE, Parikshit N.~

2026/10499 ~ Complete ~54:AN INTELLIGENT ASSISTIVE BEHAVIORAL ANALYSIS SYSTEM FOR NEURODIVERGENT INDIVIDUALS ~71:VISHWAKARMA INSTITUTE OF TECHNOLOGY, 666, UPPER MARKET RD, UPPER INDIRA NAGAR, BIBWEWADI, PUNE, MAHARASHTRA, 411037, India;VISHWAKARMA UNIVERSITY, SURVEY NO 2 3, 4, KONDHWA MAIN RD, LAXMI NAGAR, BETAL NAGAR, KONDHWA, PUNE, MAHARASHTRA, 411048, India ~72: DATKAR, Nishida Amit;DHALE, Bhojraj Nandraj;DHARMANI, Daksh Vijay;KULKARNI, Radhika;PATIL, Devansh~

2026/10517 ~ Complete ~54:HYDROCYCLONE ~71:WEIR MINERALS CHILE S.A., San Jose 0815, Chile ~72: ARELLANO, Jose;PUTZ, Eduardo;QUINTANA, Braulio~ 33:GB ~31:2406423.0 ~32:08/05/2024

2026/10512 ~ Complete ~54:A CREDIT CARD FRAUD DETECTION SYSTEM BY USING ML AND GNN ~71:Vishwakarma Institute of Technology, 666, UPPER MARKET RD, UPPER INDIRA NAGAR, BIBWEWADI, PUNE, MAHARASHTRA, 411037, India;Vishwakarma University, SURVEY NO 2 3, 4, KONDHWA MAIN RD, LAXMI NAGAR, BETAL NAGAR, KONDHWA, PUNE, MAHARASHTRA, 411048, India ~72: GADIWALE, Maroof;JADHVA, Sanyog;KHALDE, Pallavi;MESHRAM, Naisargi;MOKASHI, Shrinidhi;PATIL, Achala~

2026/10518 ~ Complete ~54:WALL-MOUNTING DEVICE FOR AN INSTALLATION ELEMENT FOR A SANITARY FIXTURE, AND INSTALLATION ELEMENT COMPRISING ~71:GROHE AG, Industriepark Edelburg, Germany ~72: FISCHER, Alex~ 33:DE ~31:10 2024 118 392.6 ~32:28/06/2024;33:WO ~31:PCT/EP2025/064173 ~32:22/05/2025

2026/10527 ~ Complete ~54:SUPPORT FOOT ~71:SIMOL S.P.A., 14 Via Fiocchetti, 42045, Luzzara (RE), Italy ~72: RIGHETTI, Valter~ 33:IT ~31:102024000017170 ~32:24/07/2024

2026/10541 ~ Complete ~54:DUAL GUIDE RNAS FOR ALLELE-SELECTIVE OR SPECIFIC GENE EDITING, AND COMPOSITIONS AND METHODS RELATING THERETO ~71:INCISIVE GENETICS, INC., 200-980 George Street, VANCOUVER V6A 0H9, BRITISH COLUMBIA, CANADA, Canada;THE UNIVERSITY OF BRITISH COLUMBIA, 103-6190 AGRONOMY ROAD, VANCOUVER V6T 1Z4, BRITISH COLUMBIA, CANADA, Canada ~72: CAPRON, Arnaud;CARON, Nicholas;CHENG, Jung-Chien;HILL, Austin;LEAVITT, Blair;LIU, Yaxin;WAGNER, Pamela;YI, Yuyin~ 33:US ~31:63/647,386 ~32:14/05/2024;33:US ~31:63/680,657 ~32:08/08/2024

2026/10459 ~ Provisional ~54:SYSTEM AND APPARATUS FOR EXTENDED-HOLDOVER OFF-GRID REFRIGERATION UTILIZING PHASE-CHANGE MATERIAL THERMAL BATTERIES AND PASSIVE HEAT EXTRACTION ~71:Nozipho Primrose Qwabe, Old Marine Drive Foreshore, South Africa ~72: Nozipho Primrose Qwabe~

2026/10461 ~ Provisional ~54:PORTABLE OFF-GRID COOLER BOX WITH EXTENDED THERMAL AUTONOMY, LITHIUM-ION STORAGE, INTEGRATED SECURE MEDICATION COMPARTMENT, AND DUAL-LAYER ANTI-THEFT LOCKING MECHANISM ~71:Nozipho Primrose Qwabe, Old Marine Drive Foreshore, South Africa ~72: Nozipho Primrose Qwabe~

2026/10463 ~ Complete ~54:MOUNTING BRACKET FOR CURTAIN RODS ~71:BAHAW, Ratankumar Mohon, 9 Morillon Way, Northpine, BRACKENFELL, Cape Town 7560, WC, SOUTH AFRICA, South Africa ~72: BAHAW, Ratankumar Mohon~

2026/10516 ~ Complete ~54:DIAPHRAGM HOUSING ~71:WEIR MINERALS NETHERLANDS B.V., Egtenrayseweg 9, Netherlands ~72: OKOROKOV, Volodymyr~ 33:GB ~31:2406655.7 ~32:10/05/2024

2026/10521 ~ Complete ~54:DOSING REGIMENS FOR N-(3-CYANO-5-(CYCLOHEXYLMETHYL)-6,6-DIMETHYL-4,5,6,7-TETRAHYDROTHIENO[3,2-C]PYRIDIN-2-YL)-2-(4-SULFAMOYLPHENYL)ACETAMIDE FOR USE IN TREATING OR PREVENTING A DENGUE VIRUS DISEASE OR DISORDER ~71:NOVARTIS AG, Lichtstrasse 35, Switzerland ~72: BREEN, Christopher Michael;KORDIKOWSKI, Andreas;LAKSHMINARAYANA, Suresh Bangalore;THALMEYR, Maude;TOMIC, Ivana~ 33:US ~31:63/647,395 ~32:14/05/2024

2026/10526 ~ Complete ~54:COMBINATION THERAPY INVOLVING ANTI-HLA-G ANTIBODIES AND ANTI-EGFR ANTIBODIES OR ANTI-PD-1 ANTIBODIES ~71:TIZONA THERAPEUTICS, INC., 611 Gateway Blvd. Suite 221 , South San Francisco, California, 94080-2005, United States of America ~72: BEERS, Courtney;MURUGAPPAN, Swaminathan;O'BRIEN, Christine~ 33:US ~31:63/650,730 ~32:22/05/2024;33:US ~31:63/751,079 ~32:29/01/2025

. - APPLIED ON 2026/11/02 -

2026/10546 ~ Provisional ~54:RETRACTABLE RADIAL-BLADE SHADE ASSEMBLY ~71:Gabrielle Kathleen De Souza, 186 Lower Hill St, South Africa;John Vernon McNamara, 186 Lower Hill St, South Africa ~72: Gabrielle Kathleen De Souza;John Vernon McNamara~

2026/10550 ~ Provisional ~54:MULTI-RETAILER CONDITIONAL PAYMENT SETTLEMENT ~71:Myrios (Pty) Ltd, 63 Park LN, South Africa ~72: Jackson Motena~

2026/10553 ~ Provisional ~54:KRISPI ~71:Johan Wilhelm Theodorus Potgieter, 7 Queen Elizabeth Drive, South Africa ~72: Johan Wilhelm Theodorus Potgieter~

2026/10556 ~ Provisional ~54:WEAVED CONVEYOR BELT BLASTING BARRICADE ~71:KHAYA ENGINEERING (PTY) LIMITED, 36 Fiat Street, Aureus, South Africa ~72: VAN ASWEGEN, Hendrik Willem Troskie~

2026/10560 ~ Provisional ~54:DUAL-TOPOLOGY OFF-GRID ENERGY ARCHITECTURE, HYBRID THERMAL-KINETIC-BIOMASS BASELOAD SUBSYSTEM, CENTRALIZED AND DECENTRALIZED GREEN HYDROGEN LOGISTICS NETWORK, AUXILIARY HARVESTING SYSTEM, AND MULTI-TIERED POWERTRAIN ECOSYSTEM FOR VEHICLE FLEETS ~71:Nozipho Primrose Qwabe, Old Marine Drive Foreshore, South Africa ~72: Nozipho Primrose Qwabe~

2026/10571 ~ Complete ~54:ENHANCED IRON-BASED OLIGOMERIZATION OF ETHYLENE USING MACHINE LEARNING-BASED K-VALUE PREDICTION ~71:CHEVRON PHILLIPS CHEMICAL COMPANY LP, 9500 LAKESIDE BLVD., THE WOODLANDS, TX 77381, USA, United States of America ~72: BISCHOF, Steven, M.;ESS, Daniel, H.;LESEBERG, Julie, A.;SMALL, Brooke, L.;WEBSTER-GARDINER, Michael, S.~ 33:US ~31:63/643,596 ~32:07/05/2024;33:US ~31:63/643,606 ~32:07/05/2024;33:US ~31:63/643,618 ~32:07/05/2024;33:US ~31:19/200,394 ~32:06/05/2025

2026/10562 ~ Provisional ~54:SYSTEM AND METHOD FOR THE INSTANTIATION OF A GOVERNED MULTI-TENANT VOICE ARTIFICIAL INTELLIGENCE OPERATING ENVIRONMENT ~71:PIXEL POND (PROPRIETARY) LIMITED, 42 Cussonia Way, Simbithi Eco Estate, South Africa ~72: TRUSCOTT, Erika Catherina~

2026/10575 ~ Complete ~54:DECKING MATERIAL AND METHOD OF MANUFACTURE ~71:FLEXITEEK INTERNATIONAL LIMITED, Woodrolfe Road, Tollesbury, United Kingdom ~72: HARVEY, Chris;RYAN, Jeff~ 33:GB ~31:2406812.4 ~32:14/05/2024

2026/10557 ~ Provisional ~54:INTEGRATED MULTI-STAGE POST-HARVEST AGRICULTURAL SYSTEM FOR PASSIVE SOLAR DEHYDRATION, EVAPORATIVE ZERO-POWER STORAGE, AND HERMETIC PEST SUFFOCATION ~71:Nozipho Qwabe, Cape Town, South Africa ~72: Nozipho Primrose Qwabe~

2026/10745 ~ Provisional ~54:MOEKETSANE FULL - LEG FLEXIBLE FOOTBALL GUARD ~71:Gerald Kgomotso Moeketsane, 82 Nyaweni Street, South Africa ~72: Gerald Kgomotso Moeketsane~

2026/10559 ~ Provisional ~54:INTEGRATED OFF-GRID MICRO-ENERGY SYSTEM WITH PHASE-CHANGE THERMAL STORAGE, GRAVITY-ASSISTED KINETIC GENERATION, AUTOMATED BIOMASS HOPPER, AND HYBRID SOLAR-STIRLING POWER ~71:Nozipho Primrose Qwabe, Old Marine Drive Foreshore, South Africa ~72: Nozipho Primrose Qwabe~

2026/10566 ~ Complete ~54:METHOD FOR IDENTIFYING INNOVATION SOURCE AND EVALUATING SCIENTIFIC AND TECHNOLOGICAL INNOVATION CAPABILITY INDEX ~71:Hunan University of Arts and Science, No. 3150 Dongting Avenue, Wuling District, Changde City, Hunan Province, 415000, People's Republic of China ~72: LI, Zhixun;LIU, Zhoulan;SHEN, Lijiao~

2026/10582 ~ Complete ~54:MONO AND BISPECIF ANTIGEN-BINDING MOLECULES THAT BIND TO AAV PARTICLES AND USES THEREOF ~71:REGENERON PHARMACEUTICALS, INC., 777 Old Saw Mill River Road, Tarrytown, New York, 10591, United States of America ~72: KYRATSOUS, Christos;MOLLER-TANK, Sven;MURPHY, Andrew J;NGUYEN, Tri;SHEN, Yang~ 33:US ~31:63/657,211 ~32:07/06/2024;33:US ~31:63/702,752 ~32:03/10/2024;33:US ~31:63/804,176 ~32:12/05/2025

2026/10545 ~ Provisional ~54:MULTI-MODAL NON-INVASIVE SYSTEM AND COMPOSITION FOR SUBSTANCE DETOXIFICATION AND WITHDRAWAL SYMPTOM MITIGATION ~71:Nozipho Qwabe, Cape Town, South Africa ~72: Nozipho Primrose Qwabe~

2026/10548 ~ Provisional ~54:SHARED DELIVERY MATCHING ~71:Myrios (Pty) Ltd, 63 Park LN, South Africa ~72: Jackson Motena~

2026/10551 ~ Provisional ~54:A GLASS CUTTING APPARATUS WITH INTEGRATED SAFETY MECHANISM ~71:ZULU AND SONS ENTERPRISE (PTY) LTD, 26 albert street, Westbourne, South Africa ~72: Bathandwa Zoya~

2026/10555 ~ Provisional ~54:MAESTRO ASSIST HUB ~71:Rupert Robert Mark September, 50 Honeyball Avenue, South Africa ~72: Rupert September~

2026/10561 ~ Provisional ~54:AUTONOMOUS OFF-GRID WATER PURIFICATION ENGINE WITH PASSIVE HYDRO-CYCLONIC INTAKE, THERMAL ENCLOSURE, ADAPTIVE POWER MULTIPLEXING, CHEMICAL-FREE CASCADE, AND FRACTIONAL BRINE CRYSTALLIZATION ~71:Nozipho Primrose Qwabe, Old Marine Drive Foreshore, South Africa ~72: Nozipho Primrose Qwabe~

2026/10568 ~ Complete ~54:A SYSTEM AND METHOD FOR MANAGING A WORKFORCE ~71:HATTINGH, Ryno, Ss Villa Chabelle, South Africa ~72: HATTINGH, Ryno~

2026/10570 ~ Complete ~54:OSCILLATING MASS ENGINE ASSEMBLY ~71:ENGLISH, Douglas Richard, 7 Gloaming Way, Darling Downs, Western Australia, 6122, Australia ~72: ENGLISH, Douglas Richard~ 33:AU ~31:2024900944 ~32:05/04/2024

2026/10573 ~ Complete ~54:ENERGY STORAGE TOWER ~71:SOM-EV NEWCO LLC, 7 World Trade Center, 250 Greenwich Street, NEW YORK 10000, NY, USA, United States of America ~72: ANDRADE, Jose Euclides;BAKER, William Frazier Jr.;PEDRETTI, Andrea~ 33:US ~31:63/642,500 ~32:03/05/2024

2026/10578 ~ Complete ~54:STING AGONIST IMMUNOSTIMULATORY ANTIBODY DRUG CONJUGATES ~71:ASTELLAS PHARMA INC., 2-5-1, Nihonbashi-Honcho, Chuo-ku, Tokyo, 103-8411, Japan ~72: BAJJURI, Krishna;DOSHI, Kshama;FERNANDEZ, Wadie Daniel Mahauad;GAKHAL, Amandeep Kaur;HU, Huiyong;KIEFEL, Helena;LI, Xiaofan;LIU, Wen;RUBAS, Werner;SINGH, Ravi Prakash;WEN, Miao;YANG, Junhao;YIN, Gang;ZHU, Xiangwei~ 33:US ~31:63/653,575 ~32:30/05/2024

2026/10581 ~ Complete ~54:IMPROVEMENTS IN AND RELATING TO NUCLEAR FUSION REACTOR SYSTEMS ~71:ASTRAL NEUTRONICS LTD, Unit H5, Severn Road, Hallen, Bristol, BS10 7SB, United Kingdom ~72: ANNEWANDTER, Robert;HAYWOOD, Thomas Peter Jackson;WALLACE-SMITH, Tom~ 33:GB ~31:2408189.5 ~32:08/06/2024;33:GB ~31:2417558.0 ~32:29/11/2024

2026/10547 ~ Provisional ~54:VERIDAN SYSTEMS ~71:Rajiv Girhawu, 4 Vlok Road, South Africa ~72: RAJIV GIRHAWU~

2026/10554 ~ Provisional ~54:LUMINA SA 283 SYSTEM - METHOD CHIP FLIP SOVEREIGN C2 MESH THAT THRIVES WITHOUT ELECTRICITY ~71:Owen Mathe, 283 Pretoria Ave Randburg, South Africa ~72: Owen Mathe~

2026/10558 ~ Provisional ~54:INTEGRATED PASSIVE COLD-CHAIN CARGO CONTAINER WITH DUAL-STAGE PHASE-CHANGE THERMAL STORAGE, MOTION-DRIVEN HEAT EXTRACTION, AND ATMOSPHERIC QUALITY CONTROL ~71:Nozipho Primrose Qwabe, Old Marine Drive Foreshore, South Africa ~72: Nozipho Primrose Qwabe~

2026/10563 ~ Provisional ~54:KHWEZI INTEGRATED TACTICAL AUTOMATION SYSTEM (KHWEZI ITAS) FOR SECURE MULTI-DOMAIN C4ISR OPERATIONS" ~71:Mpumelelo Success Mpembe, D-404, South Africa ~72: Mpumelelo Success Mpembe~ 33:ZA ~31:1 ~32:01/11/2026

2026/10569 ~ Complete ~54:METHOD AND SYSTEM FOR INTELLIGENT SUPERVISION OF SAFETY INFORMATION AT NUCLEAR POWER PLANT ~71:GUIZHOU YOUPIN SLEEP HEALTH INDUSTRY CO., LTD., 4th Floor, No. 17, Smart Industry Park, Development Zone, Bijiang District, Tongren City, Guizhou Province, People's Republic of China ~72: FengXiaoPen;LIU, Enping;LIU, Sujun;Tangfei;Wangshengxiang~

2026/10574 ~ Complete ~54:COMPOSITIONS AND METHODS FOR LOCALIZED ADIPOCYTE CELL DEATH ~71:AMALFI BIO, INC., 1301 Riverplace Blvd., Suite 800, JACKSONVILLE 32207, FL, USA, United States of America ~72: JOSEPH, John H.;MARMO, Alec C.;MARMO, Joseph C.~ 33:US ~31:63/642,435 ~32:03/05/2024;33:US ~31:63/725,301 ~32:26/11/2024;33:US ~31:63/758,920 ~32:14/02/2025

2026/10549 ~ Provisional ~54:MULTI RETAILER FULFILMENT TRIP OPTIMISATION ~71:Myrios (Pty) Ltd, 63 Park LN, South Africa ~72: Jackson Motena~

2026/10552 ~ Provisional ~54:TRIPLESPLIT: A CARRIER-ATTESTED THRESHOLD CRYPTOGRAPHIC SYSTEM AND METHOD FOR NEUTRALIZING MOBILE TRANSACTION FRAUD AND ACCOUNT TAKEOVERS ~71:BONGA HLAZIYA, 24 duke of kent, South Africa ~72: BONGA HLAZIYA~

2026/10564 ~ Provisional ~54:SYSTEM AND METHOD FOR CRYPTOGRAPHIC PROVENANCE ATTESTATION AND MULTI-REGIME COMPLIANCE RECONCILIATION FOR ARTIFICIAL-INTELLIGENCE-GENERATED SOURCE CODE ~71:Webster Tendai Malilani, 33 Heron Drive, Three Rivers East, Vereeniging, Gauteng, 1941, South Africa ~72: Webster Tendai Malilani~

2026/10567 ~ Complete ~54:A VEHICLE CANOPY WITH INTEGRATED TENT AND AWNING SYSTEM ~71:ABRAHAM ALBERTUS DE VILLIERS, 25B Basalt Avenue, South Africa ~72: ABRAHAM ALBERTUS DE VILLIERS~

2026/10572 ~ Complete ~54:ARRANGEMENT AND METHOD FOR STACKING ~71:BETOLAR OYJ, Mannilantie 9, KANNONKOSKI 43300, FINLAND, Finland ~72: KAREKIVI, Pasi;LEPPÄNEN, Juha;RÄISÄNEN, Mikko~ 33:FI ~31:20245397 ~32:03/04/2024

2026/10576 ~ Complete ~54:SYSTEMS AND METHODS FOR ORGAN PERFUSION ~71:O-PAD IRELAND LP, 70 Sir John Rogerson's Quay Dublin 2, Ireland ~72: BERGLUND, Erik~ 33:US ~31:63/575,410 ~32:05/04/2024

2026/10579 ~ Complete ~54:PDK1 MODULATOR COMPOUND AND COMPOSITION CONTAINING SAME ~71:PROVIBIO CO., LTD., (Eobang-dong, Inje University) Changjokwan 417-7ho, 197 Inje-ro, Gimhae-si, Gyeongsangnamdo 50834, Republic of Korea ~72: PARK, Seok Ju~ 33:KR ~31:10-2024-0053033 ~32:19/04/2024;33:KR ~31:10-2025-0051925 ~32:21/04/2025

2026/10580 ~ Complete ~54:IMPROVEMENTS IN AND RELATING TO ISOTOPE PRODUCTION ~71:ASTRAL NEUTRONICS LTD, Unit H5, Severn Road, Hallen, Bristol, BS10 7SB, United Kingdom ~72: ANNEWANDTER, Robert;HAYWOOD, Thomas Peter Jackson;WALLACE-SMITH, Tom;WOODWARD, Madeleine Serena~ 33:GB ~31:2408189.5 ~32:08/06/2024;33:GB ~31:2506776.0 ~32:02/05/2025

2026/10584 ~ Complete ~54:A SOAP BAR COMPOSITION ~71:UNILEVER GLOBAL IP LIMITED, Port Sunlight, Wirral, Merseyside, CH62 4ZD, United Kingdom ~72: BARNE, Sameer Keshav;BEENA, Karthika;GHATLIA, Naresh Dhirajlal;GHOSH, Chandra Sekhar;SAJI, Maya Treesa~ 33:EP ~31:24183338.3 ~32:20/06/2024

2026/10585 ~ Complete ~54:ANTI-B7H3 ANTIBODY-ERIBULIN CONJUGATE AND USE THEREOF ~71:INNOLAKE BIOPHARMA (HANGZHOU) CO., LTD., Room 301, Building 24, Yinhai Sci-Tech Innovation Center, Xiasha Street, People's Republic of China ~72: CHEN, Rulei;JIAO, Qingan;LI, Yan;SHANG, Yushuan;XIA, Mingde;XIN, Yanfei~ 33:CN ~31:202410406439.8 ~32:03/04/2024;33:CN ~31:202410966155.4 ~32:18/07/2024

2026/10565 ~ Provisional ~54:METHOD AND SYSTEM FOR GRAPH-ENFORCED GOVERNANCE OF AUTOMATED AGENTS WITH ERASURE-COMPATIBLE, INDEPENDENTLY VERIFIABLE EVIDENCE COMMITMENTS ~71:John Kevin Wellard, 125 Benoni Road, Rynfield AH, South Africa ~72: John Kevin Wellard~

2026/10577 ~ Complete ~54:SYSTEMS AND METHODS FOR KIDNEY PERFUSION ~71:O-PAD IRELAND LP, 70 Sir John Rogerson's Quay Dublin 2, Ireland ~72: BERGLUND, Erik~ 33:US ~31:63/575,429 ~32:05/04/2024

2026/10583 ~ Complete ~54:ANTI-KIT ANTIBODY DOSING AND METHODS ~71:CELLDEX THERAPEUTICS, INC., 53 Frontage Road, Suite 220, Hampton, New Jersey, 08827, United States of America ~72: ALVARADO, Diego;CROWLEY, Elizabeth S;HAWTHORNE, Thomas R;HEATH-CHIOZZI, Margo;KELER, Tibor;WISHART, Neil;YOUNG, Diane Caroline~ 33:US ~31:63/653,727 ~32:30/05/2024

. - APPLIED ON 2026/11/03 -

2026/10639 ~ Complete ~54:A SYSTEM AND METHOD FOR PREDICTION AND MITIGATION OF THERMAL HAZARDS IN ELECTRIC VEHICLE BATTERY SYSTEMS ~71:Vishwakarma Institute of Technology, 666, Upper Market RD, Upper Indira Nagar, Bibwewadi, Pune, Maharashtra, 411037, India;Vishwakarma University, Survey No 2 3, 4, Kondhwa Main Rd, Laxmi Nagar, Betal Nagar, Kondhwa, Pune, Maharashtra, 411048, India ~72: GULBHILE, Swapnil Vasant;JAIN, Shreyans Ajay;MAHAJAN, Samarth Sanjay;NEHE, Vedant Umesh;SABLE, Sunil Satwaji~

2026/10634 ~ Complete ~54:A SURVIVAL-BASED GAME SYSTEM ~71:Vishwakarma Institute of Technology, 666, Upper Market RD, Upper Indira Nagar, Bibwewadi, Pune, Maharashtra, 411037, India;Vishwakarma University, Survey No 2 3, 4, Kondhwa Main Rd, Laxmi Nagar, Betal Nagar, Kondhwa, Pune, Maharashtra, 411048, India ~72: BHATAGALIKAR, Varad;KODMELWAR, Manohar;SANAP, Madhura Eknath;SAWANT, Ayush;SUKTE, Chudaman;UPADHYE, Gopal;WALISHETTY, Prathamesh;WANDRE, Chetan;WANKHADE, Shalini~

2026/10641 ~ Complete ~54:A LAYERED REAL-TIME PHISHING WEBSITE DETECTION SYSTEM USING URL, CONTENT, STRUCTURAL, AND BEHAVIORAL ANALYSIS ~71:Vishwakarma Institute of Technology, 666, Upper Market RD, Upper Indira Nagar, Bibwewadi, Pune, Maharashtra, 411037, India;Vishwakarma University, Survey No 2 3, 4, Kondhwa Main Rd, Laxmi Nagar, Betal Nagar, Kondhwa, Pune, Maharashtra, 411048, India ~72: GANATRA, Devanshish Navesh;GATTANI, Riya Ravi;INGL, Prasad Murlidhar;INGLE, Pranav Sanjay;JADHAO, Pravin Ashok;JAGTAP, Supriya Prakash~

2026/10653 ~ Complete ~54:AN AI-POWERED SECTION-WISE SEMANTIC SIMILARITY DETECTION SYSTEM FOR ACADEMIC PROPOSALS ~71:Vishwakarma Institute of Technology, 666, Upper Market RD, Upper Indira Nagar, Bibwewadi, Pune, Maharashtra, 411037, India;Vishwakarma University, Survey No 2 3, 4, Kondhwa Main Rd, Laxmi Nagar, Betal Nagar, Kondhwa, Pune, Maharashtra, 411048, India ~72: ANTAD, Sonali M.;BATRA, Ved Y.;BHANAPURE, Pratap A.;BIBEKAR, Bhupen A.;GHUGE, Kalyani;SHINDE, Sandeep R.~

2026/10664 ~ Complete ~54:A MULTIMODAL AI SYSTEM FOR CANCER DIAGNOSIS AND DIGITAL TUMOR TWIN SIMULATION ~71:Vishwakarma Institute of Technology, 666, Upper Market RD, Upper Indira Nagar, Bibwewadi, Pune, Maharashtra, 411037, India;Vishwakarma University, Survey No 2 3, 4, Kondhwa Main Rd, Laxmi Nagar, Betal Nagar, Kondhwa, Pune, Maharashtra, 411048, India ~72: AGRAWAL, Mohit Rajesh;AGRAWAL, Tanay Vijay;AMBHORE, Tanishk Ratan;AMBURE, Ruturaj Pandurang;ANDHARE, Tejas Sharad;CHINCHMALATPURE, Sheela Vijay~

2026/10669 ~ Complete ~54:AN AI BASED SYSTEM FOR LITHIUM-ION BATTERY SOH ESTIMATION ~71:Vishwakarma Institute of Technology, 666, Upper Market RD, Upper Indira Nagar, Bibwewadi, Pune, Maharashtra, 411037, India;Vishwakarma University, Survey No 2 3, 4, Kondhwa Main Rd, Laxmi Nagar, Betal Nagar, Kondhwa, Pune, Maharashtra, 411048, India ~72: BHAGWAT, Smita;CHOUDHARI, Harshvardhan;DHANAVE, Vivek;GAIKWAD, Vedant;GULGHANE, Lokesh~

2026/10675 ~ Complete ~54:A SECURE DISTRIBUTED ONLINE VOTING SYSTEM WITH TWO-FACTOR AUTHENTICATION AND TLS-ENCRYPTED INTERNAL COMMUNICATION ~71:Vishwakarma Institute of Technology, 666, Upper Market RD, Upper Indira Nagar, Bibwewadi, Pune, Maharashtra, 411037, India;Vishwakarma University, Survey No 2 3, 4, Kondhwa Main Rd, Laxmi Nagar, Betal Nagar, Kondhwa, Pune, Maharashtra, 411048, India ~72: SAVALE, Vaishali Vidyadhar;SHAIKH, Aryan Firoj;SONAWANE, Om Ganeshkumar;THAKARE, Krushna Prakash;THETE, Pratik Ravasaheb;VYAVAHARE, Ruchika Deepak~

2026/10680 ~ Complete ~54:COMBINATION OF [177LU]LU-PSMA-617 AND DNA DAMAGE RESPONSE INHIBITOR ~71:ARTIOS PHARMA LIMITED, Babraham Hall, Babraham Research Campus, United Kingdom;NOVARTIS AG, Lichtstrasse 35, Switzerland ~72: BARYS, Louise;CORTES-CROS, Marta;HINDUPUR, Sravanth Kumar;PINTO DO COUTO E SILVA, Joana;RANZANI, Marco;REBER, Josefine Astrid;RESCHKE, Markus;ROBINSON, Helen Marie Ruth;SCHMELZLE, Tobias;SMITH, Graeme Cameron Murray~ 33:US ~31:63/575,373 ~32:05/04/2024

2026/10689 ~ Complete ~54:METHODS OF TREATMENT ~71:ZB17 LLC, 1007 North Orange Street, 10th Floor, Wilmington, United States of America ~72: CABELL, Christopher Hayden;HOWELL, Michael David;WALSH,

Brandon James~ 33:US ~31:63/636,375 ~32:19/04/2024;33:US ~31:63/692,300 ~32:09/09/2024;33:US ~31:63/739,966 ~32:30/12/2024

2026/10587 ~ Provisional ~54:PORTABLE INTEGRATED PERFUSION SYSTEM FOR CEREBRAL REVIVIFICATION ~71:BRADLEY KYLE DUNCAN, 18 MORGENSTER CRESCENT, South Africa ~72: BRADLEY KYLE DUNCAN~

2026/10593 ~ Provisional ~54:CALCIUM-FREE COLLOID PRIMING PERFUSION SOLUTION, AND KIT AND SYSTEM FOR ITS STAGED DELIVERY TO THE BRAIN AFTER CIRCULATORY ARREST ~71:BRADLEY KYLE DUNCAN, 18 MORGENSTER CRESCENT, South Africa ~72: BRADLEY KYLE DUNCAN~

2026/10598 ~ Provisional ~54:MITOCHONDRIA-TARGETED PERFUSION SOLUTION, AND KIT, FOR PRESERVING THE BRAIN AFTER CIRCULATORY ARREST ~71:BRADLEY KYLE DUNCAN, 18 MORGENSTER CRESCENT, South Africa ~72: BRADLEY KYLE DUNCAN~

2026/10602 ~ Provisional ~54:PERFUSION SOLUTION CONTAINING A POLYETHYLENE-GLYCOL-CONJUGATED EXTRACELLULAR ANNELID HAEMOGLOBIN OF LOW OXYGEN AFFINITY, AND TWO-PART KIT THEREFOR ~71:BRADLEY KYLE DUNCAN, 18 MORGENSTER CRESCENT, South Africa ~72: BRADLEY KYLE DUNCAN~

2026/10608 ~ Provisional ~54:TRANSFORMER WITH PLURAL SECONDARY WINDINGS ~71:The Trustees for the time being of the KMN FULFILMENT TRUST, 8 Kestrel Street, Ebotse Golf Estate, Rynfield, BENONI 1504, SOUTH AFRICA, South Africa ~72: MAKGERU, Kabu Walter~

2026/10612 ~ Provisional ~54:INTEGRATED ELECTRIC VERTICAL-LIFT VEHICLE WITH COMPRESSED-GAS THRUST, UNDERBODY SUCTION, AUTONOMOUS MANOEUVRE CONTROL AND INTELLIGENT SAFETY MANAGEMENT ~71:Ahmed Waseef Saib, 24 Park Avenue , Desainagar, South Africa ~72: Ahmed Waseef Saib~

2026/10620 ~ Complete ~54:REMOVABLE ICE-BREAKING INSERT FOR A FREEZER DRAWER GUIDE ~71:POZHIDAEVA Alina Vadimovna, Tagilskaya St. 4, Apt. 765, Moscow, 107143, Russian Federation ~72: POZHIDAEVA Alina Vadimovna~ 33:RU ~31:2026125499 ~32:19/08/2026

2026/10621 ~ Complete ~54:REMOVABLE PRE-BRUSH SEPARATOR OF FLEXIBLE OBJECTS FOR A ROBOT VACUUM CLEANER ~71:Pozhidaeva Alina Vadimovna, Tagilskaya St. 4, Apt. 765, Moscow, 107143, Russian Federation ~72: Pozhidaeva Alina Vadimovna~ 33:RU ~31:2026125560 ~32:20/08/2026

2026/10625 ~ Complete ~54:OUTDOOR CLIMATE UNIT WITH A PRE-INLET SNOW-SEPARATING MODULE ~71:Pozhidaeva Alina Vadimovna, Tagilskaya St. 4, Apt. 765, Moscow, 107143, Russian Federation ~72: Pozhidaeva Alina Vadimovna~ 33:RU ~31:2026125561 ~32:20/08/2026

2026/10628 ~ Complete ~54:RETAINER MESH ASSEMBLY ~71:Clear Creek Trading 167 (Pty) Ltd., 11 Brammer Street, South Africa ~72: VAN DER MERWE, Lukas Cornelius~ 33:ZA ~31:2025/06531 ~32:04/08/2025

2026/10631 ~ Complete ~54:ANTIVIRAL INDOLINYL COMPOUNDS AND USES THEREOF ~71:GILEAD SCIENCES, INC., 333 Lakeside Drive, Foster City, California, 94404, United States of America ~72: CHO, Aesop;DE LA FUENTE, Katherine;STRATTON, Thomas P;WANG, Peiyuan;WATKINS, William J;XU, Jie;YANG, Kin S~ 33:US ~31:63/344,487 ~32:20/05/2022

2026/10640 ~ Complete ~54:A WEARABLE LOW-COST ULTRASONIC SPATIAL NAVIGATION ECOSYSTEM FOR THE VISUALLY IMPAIRED ~71:Vishwakarma Institute of Technology, 666, Upper Market RD, Upper Indira Nagar, Bibwewadi, Pune, Maharashtra, 411037, India;Vishwakarma University, Survey No 2 3, 4, Kondhwa Main

Rd, Laxmi Nagar, Betal Nagar, Kondhwa, Pune, Maharashtra, 411048, India ~72: ADKAR, Samrudhi Hemant;GORDE, Supriya S.;KSHIRSAGAR, Aaditya Mukesh;MAMARDE, Aditya Milind;PATIL, Abhishek Arvind~

2026/10649 ~ Complete ~54:AN INTELLIGENT IOT DOORBELL SYSTEM WITH CLOUD ANALYTICS & ENVIRONMENTAL SENSING ~71:Vishwakarma Institute of Technology, 666, Upper Market RD, Upper Indira Nagar, Bibwewadi, Pune, Maharashtra, 411037, India;Vishwakarma University, Survey No 2 3, 4, Kondhwa Main Rd, Laxmi Nagar, Betal Nagar, Kondhwa, Pune, Maharashtra, 411048, India ~72: BHAPKAR, Harshada Sachin;PATIL, Shobha Mahendrakumar;THOPATE, Kaushlya Vaibhav~

2026/10659 ~ Complete ~54:A LOW-COST EMBEDDED SYSTEM FOR SIMULTANEOUS LIQUID LEVEL, VOLUME AND DENSITY MEASUREMENT WITH AUTOMATED OVERFLOW ALERT ~71:Vishwakarma Institute of Technology, 666, Upper Market RD, Upper Indira Nagar, Bibwewadi, Pune, Maharashtra, 411037, India;Vishwakarma University, Survey No 2 3, 4, Kondhwa Main Rd, Laxmi Nagar, Betal Nagar, Kondhwa, Pune, Maharashtra, 411048, India ~72: DESHMUKH, Sanyukta S.;KALWANI, Chirag S.;KAMBLE, Rudhira R.;KAMBLE, Sanket A.;KAMDAR, Aryan S.;KAMDI, Punishk S.~

2026/10665 ~ Complete ~54:AN AI-BASED MULTIMODAL STRESS PREDICTION AND MONITORING SYSTEM ~71:Vishwakarma Institute of Technology, 666, Upper Market RD, Upper Indira Nagar, Bibwewadi, Pune, Maharashtra, 411037, India;Vishwakarma University, Survey No 2 3, 4, Kondhwa Main Rd, Laxmi Nagar, Betal Nagar, Kondhwa, Pune, Maharashtra, 411048, India ~72: CHINCHMALATPURE, Sheela Vijay;DESAI, Samruddhi Sadashiv;DESHMUKH, Samrudhi Narhari;DESHMUKH, Vishakha Nitin;DHARADE, Vijay Dharma;GAJARE, Aditya Sanjay~

2026/10670 ~ Complete ~54:AN AI-ASSISTED PROBABILISTIC ECOMMERCE REVENUE FORECASTING SYSTEM ~71:Vishwakarma Institute of Technology, 666, Upper Market RD, Upper Indira Nagar, Bibwewadi, Pune, Maharashtra, 411037, India;Vishwakarma University, Survey No 2 3, 4, Kondhwa Main Rd, Laxmi Nagar, Betal Nagar, Kondhwa, Pune, Maharashtra, 411048, India ~72: AGARWAL, Palak;JADHAV, Varsha;SANGVE, Sunil;WAGHMARE, Aditya~

2026/10643 ~ Complete ~54:AN AI-POWERED SMART WASTE SEGREGATION, GEOLOCATION, AND REPORTING SYSTEM ~71:Vishwakarma Institute of Technology, 666, Upper Market RD, Upper Indira Nagar, Bibwewadi, Pune, Maharashtra, 411037, India;Vishwakarma University, Survey No 2 3, 4, Kondhwa Main Rd, Laxmi Nagar, Betal Nagar, Kondhwa, Pune, Maharashtra, 411048, India ~72: DESHMUKH, Jay Dattatray;DESHPANDE, Atharv Atul;DHAGE, Vinayak Eknath;KULKARNI, Jayant Venkatrao;PATANKAR, Sanika Sarang~

2026/10645 ~ Complete ~54:AN IOT-BASED REAL-TIME HAND GESTURE RECOGNITION DASHBOARD FOR DYNAMIC ACTUATION OF EMBEDDED HARDWARE SYSTEMS ~71:Vishwakarma Institute of Technology, 666, Upper Market RD, Upper Indira Nagar, Bibwewadi, Pune, Maharashtra, 411037, India;Vishwakarma University, Survey No 2 3, 4, Kondhwa Main Rd, Laxmi Nagar, Betal Nagar, Kondhwa, Pune, Maharashtra, 411048, India ~72: DHANGAR, Rohit Ravindra;SHINDE, Sandip Ramrao;THOPATE, Kaushalya Vaibhav;UKE, Shailaja Nilesh~

2026/10650 ~ Complete ~54:A CAMERA-FREE MOVEMENT DETECTION SYSTEM ~71:Vishwakarma Institute of Technology, 666, Upper Market RD, Upper Indira Nagar, Bibwewadi, Pune, Maharashtra, 411037, India;Vishwakarma University, Survey No 2 3, 4, Kondhwa Main Rd, Laxmi Nagar, Betal Nagar, Kondhwa, Pune, Maharashtra, 411048, India ~72: KARDILE, Mansi Sanjay;KATIKAR, Shilpa;MALI, Piyush;MANE, Yash;MANGALAPELLY, Hurditya;PHATANGARE, Sheetal Atul;RATHI, Snehal;SHINDE, Sandip Ramrao;TIWASKAR, Shweta~

2026/10656 ~ Complete ~54:A MODULAR WEB-DRIVEN TASK EXECUTION ENGINE FOR ENHANCING FULL-STACK SOFTWARE DEVELOPMENT PRODUCTIVITY ~71:Vishwakarma Institute of Technology, 666, Upper Market RD, Upper Indira Nagar, Bibwewadi, Pune, Maharashtra, 411037, India;Vishwakarma University, Survey No 2 3, 4, Kondhwa Main Rd, Laxmi Nagar, Betal Nagar, Kondhwa, Pune, Maharashtra, 411048, India ~72: BANCHHOR, Chitrakant;PATIL, Sahil Balasaheb;PATKAR, Sarthak Anil;PETKAR, Sanskar Sandeep;SRIVASTAV, Hriddhi Ranjan~

2026/10661 ~ Complete ~54:AN AI DRIVEN HEALTH DETECTOR SYSTEM FOR INDUSTRIAL MACHINES ~71:Vishwakarma Institute of Technology, 666, Upper Market RD, Upper Indira Nagar, Bibwewadi, Pune, Maharashtra, 411037, India;Vishwakarma University, Survey No 2 3, 4, Kondhwa Main Rd, Laxmi Nagar, Betal Nagar, Kondhwa, Pune, Maharashtra, 411048, India ~72: BELHE, Sayali Kulkarni;HADE, Asit Bhimraowank;PATIL, Yash Dipak;SHINDE, Raj Amol;SHUKLA, Ishika Manoj;WANKHADE, Mohit Ajay~

2026/10592 ~ Provisional ~54:PERFUSION SOLUTION CONTAINING A ZWITTERIONIC BUFFER AND A POLYETHYLENE-GLYCOL-CONJUGATED CARBONIC ANHYDRASE, AND TWO-PART KIT FOR ITS RECONSTITUTION ~71:BRADLEY KYLE DUNCAN, 18 MORGENSTER CRESCENT, South Africa ~72: BRADLEY KYLE DUNCAN~

2026/10596 ~ Provisional ~54:HAEMOGLOBIN-FREE PERFLUOROCARBON EMULSION PERFUSATE FOR HYPOTHERMIC PERFUSION OF THE BRAIN, AND TWO-CONTAINER KIT FOR ITS PREPARATION ~71:BRADLEY KYLE DUNCAN, 18 MORGENSTER CRESCENT, South Africa ~72: BRADLEY KYLE DUNCAN~

2026/10600 ~ Provisional ~54:HAEMOGLOBIN-FREE PERFLUOROCARBON PERFUSATE CONTAINING A MITOCHONDRIAL PERMEABILITY-TRANSITION PORE INHIBITOR, AND PERFUSION SYSTEM ~71:BRADLEY KYLE DUNCAN, 18 MORGENSTER CRESCENT, South Africa ~72: BRADLEY KYLE DUNCAN~

2026/10604 ~ Provisional ~54:PERFUSION SOLUTION CONTAINING A PARP-1 INHIBITOR AND A NAD+ PRECURSOR FOR THE BRAIN AFTER CIRCULATORY ARREST, AND KIT CONTAINING IT ~71:BRADLEY KYLE DUNCAN, 18 MORGENSTER CRESCENT, South Africa ~72: BRADLEY KYLE DUNCAN~

2026/10610 ~ Provisional ~54:DRONE BARRIER POST ~71:COCHRANE GULF FZE, 901 Suntech Tower, Silicon Oasis, United Arab Emirates ~72: BUCARIZZA, Vlado~

2026/10615 ~ Complete ~54:MXENE-BASED POROUS ADSORPTION MATERIAL AND PREPARATION METHOD AND APPLICATION THEREOF ~71:Tianjin College, University of Science and Technology Beijing, No. 1, Zhujiang Beihuandong Road, Jingjin Xincheng, Baodi Dist., Tianjin, People's Republic of China ~72: Chencan Long;Jin'e Sun;Lina Wang;Naichuan Yu;Rongmei Si;Xuexiao Zhen;Yao Xue;Yuan Zhao;Zhilong Xu~

2026/10624 ~ Complete ~54:REMOVABLE SUPPORT FOR A HOUSEHOLD MACHINE WITH A TWO-ZONE GRAVITY-FRICTION SUPPORT SURFACE ~71:POZHIDAEVA Alina Vadimovna, Tagilskaya St. 4, Apt. 765, Moscow, 107143, Russian Federation ~72: POZHIDAEVA Alina Vadimovna~ 33:RU ~31:2026125487 ~32:19/08/2026

2026/10626 ~ Complete ~54:GUY-LINE TENSIONER FOR A TENT, AWNING OR CANOPY WITH A WATER-DIVERTING HOUSING PROFILE ~71:Pozhidaeva Alina Vadimovna, Tagilskaya St. 4, Apt. 765, Moscow, 107143, Russian Federation ~72: Pozhidaeva Alina Vadimovna~ 33:RU ~31:2026125558 ~32:20/08/2026

2026/10635 ~ Complete ~54:A DATASET INTELLIGENCE GRAPH BASED MACHINE LEARNING LIFECYCLE MANAGEMENT SYSTEM ~71:Vishwakarma Institute of Technology, 666, Upper Market RD, Upper Indira Nagar, Bibwewadi, Pune, Maharashtra, 411037, India;Vishwakarma University, Survey No 2 3, 4, Kondhwa Main Rd, Laxmi Nagar, Betal Nagar, Kondhwa, Pune, Maharashtra, 411048, India ~72: BHAGAT, Suyash

Subhash;BHARANE, Shubham Ganesh;DABHADE, Aniket Sangitrao;DABHIYA, Mustansir Burhani;DALVI, Prasad Ganpat;DONGRE, Shital Parag~

2026/10638 ~ Complete ~54:A SERVERLESS PEER-TO-PEER SYSTEM FOR LOCAL AREA NETWORK BASED FILE TRANSFER, REAL-TIME MESSAGING, AND GROUP COLLABORATION ~71:Vishwakarma Institute of Technology, 666, Upper Market RD, Upper Indira Nagar, Bibwewadi, Pune, Maharashtra, 411037, India;Vishwakarma University, Survey No 2 3, 4, Kondhwa Main Rd, Laxmi Nagar, Betal Nagar, Kondhwa, Pune, Maharashtra, 411048, India ~72: DENGALE, Aditya Uday;KADAM, Vikrant Kailas;PAGARE, Janhavi Bhausaheb;PAGARIYA, Kartik Rajesh;SAVALE, Vaishali Vidyadhar;YELAVIKAR, Pranali Dasharath~

2026/10663 ~ Complete ~54:A VIDEO GAME SYSTEM FOR REAL-TIME PHYSICS-BASED VEHICLE MOTION SIMULATION IN A THREE-DIMENSIONAL SPACE ~71:Vishwakarma Institute of Technology, 666, Upper Market RD, Upper Indira Nagar, Bibwewadi, Pune, Maharashtra, 411037, India;Vishwakarma University, Survey No 2 3, 4, Kondhwa Main Rd, Laxmi Nagar, Betal Nagar, Kondhwa, Pune, Maharashtra, 411048, India ~72: DESHMUKH, Gargi;GANGWAL, Rushal Pankaj;KATHURIA, Kartik Pratap;KODMELWAR, Manohar;MAGAR, Hanmant;MAHALLE, Parikshit;SANAP, Madhura Eknath;SUKTE, Chudaman;UPADHYE, Gopal;WANKHADE, Shalini~

2026/10679 ~ Complete ~54:COMPOSITIONS AND METHODS FOR CROP-PROTECTION AND USES THEREOF ~71:TIDAL VISION PRODUCTS, 3710 IRONGATE ROAD, BELLINGHAM, WA 98226, USA, United States of America ~72: BLOUNT, Jadon;CHENG, Yuan;HAMMILL, Kevin;MILLS, Mitchell;RALIYA, Ramesh;SHOEMAKER, James, A. W.~ 33:US ~31:63/632,454 ~32:10/04/2024

2026/10685 ~ Complete ~54:HERBICIDAL COMPOSITIONS ~71:BAYER AKTIENGESELLSCHAFT, Kaiser-Wilhelm-Allee 1, LEVERKUSEN 51373, GERMANY, Germany ~72: BICKERS, Udo;MENNE, Hubert;TOSSENS, Herve;WADDINGTON, Mark~ 33:US ~31:63/574,453 ~32:04/04/2024

2026/10691 ~ Complete ~54:REMOVAL OF SULFUR AND OXYGEN FROM CO2-RICH STREAMS ~71:TOPSOE A/S, Haldor Topsøes Allé 1, 2800, Kgs. Lyngby, Denmark ~72: HAMMERSHØI, Birgitte Staal;KAARSHOLM, Mads Kristian;THELLEFSEN, Morten;ØSTBERG, Martin~ 33:EP ~31:24177358.9 ~32:22/05/2024

2026/10648 ~ Complete ~54:AN INTELLIGENT ASSISTIVE CAP SYSTEM WITH MULTIMODAL VISION PROCESSING FOR THE VISUALLY IMPAIRED ~71:Vishwakarma Institute of Technology, 666, Upper Market RD, Upper Indira Nagar, Bibwewadi, Pune, Maharashtra, 411037, India;Vishwakarma University, Survey No 2 3, 4, Kondhwa Main Rd, Laxmi Nagar, Betal Nagar, Kondhwa, Pune, Maharashtra, 411048, India ~72: DESHMUKH, Pruthviraj Prashant;GORDE, Pranav Gorakshnath;PATIL, Prerna Nilkanth;PAWAR, Shital Vijaykumar~

2026/10644 ~ Complete ~54:AN AI-ENABLED IOT SYSTEM FOR SMART SOIL MONITORING AND CROP MANAGEMENT ~71:Vishwakarma Institute of Technology, 666, Upper Market RD, Upper Indira Nagar, Bibwewadi, Pune, Maharashtra, 411037, India;Vishwakarma University, Survey No 2 3, 4, Kondhwa Main Rd, Laxmi Nagar, Betal Nagar, Kondhwa, Pune, Maharashtra, 411048, India ~72: NALEGAONKAR, Prathmesh Gajanan;PANDARKAR, Shivprasad Bhaskar;SHELKE, Priya;SURVE, Omkar Baliram;WAGMODE, Santosh Tanajirao~

2026/10651 ~ Complete ~54:A PREDICTIVE DELAY-AWARE SCHEDULING ASSISTANCE SYSTEM FOR RAILWAYS ~71:Vishwakarma Institute of Technology, 666, Upper Market RD, Upper Indira Nagar, Bibwewadi, Pune, Maharashtra, 411037, India;Vishwakarma University, Survey No 2 3, 4, Kondhwa Main Rd, Laxmi Nagar, Betal Nagar, Kondhwa, Pune, Maharashtra, 411048, India ~72: DANDEKAR, Aadi Rohit;DESHPANDE, Tushar Girishchandra;DHAPRE, Aniket Kedar;GAIKWAD, Vijay Dattatray;RAUT, Ketan Janraoji~

2026/10655 ~ Complete ~54:A SYSTEM FOR DIGITAL SPEECH ENHANCEMENT USING MULTI-STAGED SIGNAL PROCESSING ~71:Vishwakarma Institute of Technology, 666, Upper Market RD, Upper Indira Nagar, Bibwewadi, Pune, Maharashtra, 411037, India;Vishwakarma University, Survey No 2 3, 4, Kondhwa Main Rd, Laxmi Nagar, Betal Nagar, Kondhwa, Pune, Maharashtra, 411048, India ~72: GIRI, Toshal Abhay;GOGATE, Aayush Narhar;GOLANDE, Tanish Rahul;KURUNDKAR, Sangeeta Vishwas~

2026/10667 ~ Complete ~54:A SYSTEM FOR GROUNDED AI-BASED NARRATIVE ANALYTICS OF TABULAR DATA ~71:Vishwakarma Institute of Technology, 666, Upper Market RD, Upper Indira Nagar, Bibwewadi, Pune, Maharashtra, 411037, India;Vishwakarma University, Survey No 2 3, 4, Kondhwa Main Rd, Laxmi Nagar, Betal Nagar, Kondhwa, Pune, Maharashtra, 411048, India ~72: BHANDARE, Shreyas;DAKHOLE, Sarthak;DHAUNDIYAL, Daksh;DONGRE, Shital Parag;KHANDVE, Ayush~

2026/10671 ~ Complete ~54:AN IMAGE-BASED DISEASE DETECTION SYSTEM FOR CAPSICUM AND CUCUMBER CROPS USING MACHINE LEARNING APPROACHES ~71:Vishwakarma Institute of Technology, 666, Upper Market RD, Upper Indira Nagar, Bibwewadi, Pune, Maharashtra, 411037, India;Vishwakarma University, Survey No 2 3, 4, Kondhwa Main Rd, Laxmi Nagar, Betal Nagar, Kondhwa, Pune, Maharashtra, 411048, India ~72: DEVKAR, Rutuja;GHODAKE, Atharv;JADHAV, Varsha;SANGVE, Sunil~

2026/10678 ~ Complete ~54:TRIGGER SYSTEM FOR FIREARMS ~71:HECKLER & KOCH GMBH, HECKLER & KOCH STRASSE 1, 78727 OBERNDORF/NECKAR, GERMANY, Germany ~72: FLEINER, Uwe;KOPF, Johannes~ 33:DE ~31:10 2024 110 028.1 ~32:10/04/2024

2026/10688 ~ Complete ~54:METHODS OF TREATMENT ~71:ZB17 LLC, 1007 North Orange Street, 10th Floor, Wilmington, United States of America ~72: CABELL, Christopher Hayden;HOWELL, Michael David;WALSH, Brandon James~ 33:US ~31:63/636,372 ~32:19/04/2024

2026/10694 ~ Complete ~54:ELECTRONICS MODULE FOR EARTH MOVING MACHINES ~71:METALOGENIA RESEARCH & TECHNOLOGIES, S.L., C/ Avila No. 45, 08005, Barcelona, Spain ~72: FERRÁNDIZ BORRAS, Vicent;GIMENO TORDERA, Albert;RIPOLL VERCELLONE, Edgar~ 33:EP ~31:24382403.4 ~32:17/04/2024;33:EP ~31:24383319.1 ~32:04/12/2024

2026/10646 ~ Complete ~54:A DYNAMIC HYBRID QUESTION-ANSWERING SYSTEM INTEGRATING A KNOWLEDGE GRAPH AND A SEMANTIC VECTOR STORE ~71:Vishwakarma Institute of Technology, 666, Upper Market RD, Upper Indira Nagar, Bibwewadi, Pune, Maharashtra, 411037, India;Vishwakarma University, Survey No 2 3, 4, Kondhwa Main Rd, Laxmi Nagar, Betal Nagar, Kondhwa, Pune, Maharashtra, 411048, India ~72: BETAL, Sahil Vishwanath;KATIKAR, Shilpa Manoj;RATHI, Snehal R;UGHADE, Vijay Vasant;WAGH, Maithili Digambar;WAGHMARE, Anjali Maruti~

2026/10654 ~ Complete ~54:AN AI-POWERED SMART HEALTH MONITORING AND EMERGENCY RESPONSE SYSTEM ~71:Vishwakarma Institute of Technology, 666, Upper Market RD, Upper Indira Nagar, Bibwewadi, Pune, Maharashtra, 411037, India;Vishwakarma University, Survey No 2 3, 4, Kondhwa Main Rd, Laxmi Nagar, Betal Nagar, Kondhwa, Pune, Maharashtra, 411048, India ~72: DONAGRE, Prachi;DONDE, Tanishka;GAIKWAD, Atharv;GANGURDE, Saurabh;GUPTA, Disha;SABLE, Sunil Satwaji~

2026/10658 ~ Complete ~54:A SMART POSTURE DETECTION SYSTEM ~71:Vishwakarma Institute of Technology, 666, Upper Market RD, Upper Indira Nagar, Bibwewadi, Pune, Maharashtra, 411037, India;Vishwakarma University, Survey No 2 3, 4, Kondhwa Main Rd, Laxmi Nagar, Betal Nagar, Kondhwa, Pune, Maharashtra, 411048, India ~72: BENJARWAD, Vaishnavi Devidas;GADE, Prasad Vinod;PATANKAR, Sanika Sarang~

2026/10660 ~ Complete ~54:AN INTELLIGENT REAL-TIME CARDIAC STRESS MONITORING SYSTEM USING PPG-DERIVED HRV AND AI-BASED PREDICTIVE ANALYTICS ~71:Vishwakarma Institute of Technology, 666, Upper Market RD, Upper Indira Nagar, Bibwewadi, Pune, Maharashtra, 411037, India;Vishwakarma University, Survey No 2 3, 4, Kondhwa Main Rd, Laxmi Nagar, Betal Nagar, Kondhwa, Pune, Maharashtra, 411048, India ~72: BARHATE, Minal Yadavrao;BELHE, Sayali Aditya;PATIL, Janhavi Shivraj;PATIL, Manthan Pravin;PATIL, Piyush Vijay;PATIL, Pranav Atul~

2026/10662 ~ Complete ~54:A FIRST-PERSON TYPING-BASED ZOMBIE DEFENSE GAME BUILT WITH PROCEDURAL GENERATION IN UNITY ~71:Vishwakarma Institute of Technology, 666, Upper Market RD, Upper Indira Nagar, Bibwewadi, Pune, Maharashtra, 411037, India;Vishwakarma University, Survey No 2 3, 4, Kondhwa Main Rd, Laxmi Nagar, Betal Nagar, Kondhwa, Pune, Maharashtra, 411048, India ~72: BHOITE, Sonali;CHAVAN, Durvesh;JADHAV, Shubham;KODMELWAR, Manohar;KOLHE, Pranav;MAGAR, Hanmant;MAHALLE, Parikshit;SHAIKH, Faraz;SUKTE, Chudaman;WANKHADE, Shalini~

2026/10666 ~ Complete ~54:AN IOT-BASED REAL-TIME APPLIANCE-LEVEL ENERGY MONITORING SYSTEM ~71:Vishwakarma Institute of Technology, 666, Upper Market RD, Upper Indira Nagar, Bibwewadi, Pune, Maharashtra, 411037, India;Vishwakarma University, Survey No 2 3, 4, Kondhwa Main Rd, Laxmi Nagar, Betal Nagar, Kondhwa, Pune, Maharashtra, 411048, India ~72: PHATANGARE, Sheetal;SHIRALE, Atharva Manik;SHIRORE, Sarthak Sudhakar~

2026/10673 ~ Complete ~54:A MULTI-AGENT SYSTEM FOR INTELLIGENT SOFTWARE DEVELOPMENT ASSISTANCE ~71:Vishwakarma Institute of Technology, 666, Upper Market RD, Upper Indira Nagar, Bibwewadi, Pune, Maharashtra, 411037, India;Vishwakarma University, Survey No 2 3, 4, Kondhwa Main Rd, Laxmi Nagar, Betal Nagar, Kondhwa, Pune, Maharashtra, 411048, India ~72: GAGARE, Sarvesh;GANDHI, Chirag;GANDHI, Tejas;GUPTA, Pragati;RAJPUT, Vaishali~

2026/10674 ~ Complete ~54:A RESUME-AWARE ADAPTIVE INTERVIEW SYSTEM WITH SCORE-GATED RETRIEVAL AND VERIFIABLE EVIDENCE TRACING ~71:Vishwakarma Institute of Technology, 666, Upper Market RD, Upper Indira Nagar, Bibwewadi, Pune, Maharashtra, 411037, India;Vishwakarma University, Survey No 2 3, 4, Kondhwa Main Rd, Laxmi Nagar, Betal Nagar, Kondhwa, Pune, Maharashtra, 411048, India ~72: GAHUKAR, Mihir Manoj;RAJPUT, Vaishali~

2026/10676 ~ Complete ~54:ELAFIBRANOR FOR USE FOR LONG-TERM TREATMENT OF PRIMARY BILIARY CHOLANGITIS ~71:GENFIT, 885 AVENUE EUGÈNE AVINÉE, 59120 LOOS, FRANCE, France;IPSEN PHARMA, 70 RUE BALAD, 75015 PARIS, FRANCE, France ~72: ANTUNES, Nuno;BIRMAN, Pascal;MAGREZ, David;MILLER, Benjamin;MOTTE, Philippe;ROUDOT, Alice;SHU, Jianfen;SLEIMAN, Marwan;TOUATI, Nathan~ 33:EP ~31:24305569.6 ~32:09/04/2024;33:EP ~31:24306598.4 ~32:30/09/2024

2026/10681 ~ Complete ~54:MACROCYCLIC COMPOUNDS AS RAS INHIBITORS FOR THE TREATMENT OF CANCER ~71:SUNRISE ONCOLOGY (HONG KONG) LIMITED, Suite 603, 6/f Laws Commercial Plaza, 788 Cheung Sha Wan Road, People's Republic of China ~72: CHEN, Huang;LIU, Mingyao;LU, Jian;PENG, Shihong;TONG, Xiaotian;ZHOU, Wenbo~ 33:CN ~31:PCT/CN2024/086658 ~32:08/04/2024;33:CN ~31:PCT/CN2024/114877 ~32:27/08/2024;33:CN ~31:PCT/CN2024/133341 ~32:20/11/2024;33:CN ~31:PCT/CN2024/137535 ~32:06/12/2024;33:CN ~31:PCT/CN2024/141123 ~32:20/12/2024

2026/10683 ~ Complete ~54:CONVERT INSTRUCTION WITH OVERFLOW RESULT CONTROL ~71:INTERNATIONAL BUSINESS MACHINES CORPORATION, New Orchard Road, Armonk, United States of America ~72: BRADBURY, Jonathan;COPELAND, Reid;GIAMEI, Bruce;GUO, Xin;KLEIN, Michael;LEBER, Petra;SCHELM, Kerstin;SLEGEL, Timothy;WAGNER, Andreas~ 33:US ~31:18/732,923 ~32:04/06/2024

2026/10686 ~ Complete ~54:HERBICIDAL COMPOSITIONS ~71:BAYER AKTIENGESELLSCHAFT, Kaiser-Wilhelm-Allee 1, LEVERKUSEN 51373, GERMANY, Germany ~72: BICKERS, Udo;MENNE, Hubert;TOSSENS, Herve;WADDINGTON, Mark~ 33:US ~31:63/574,453 ~32:04/04/2024

2026/10692 ~ Complete ~54:PNEUMOCOCCAL VACCINE ~71:ABERA BIOSCIENCE AB, Virdings Allé 32, 754 50 Uppsala, Sweden ~72: DE JONGE, Marinus Isaäk;JONG, Wouter Simon Petrus;LUNDGREN, Mats Anders;VAN BEEK, Lucille Franciska;VAN DEN BERG VAN SAPAROEA, Hendrik Bart;WOLF, Natascha~ 33:EP ~31:24177273.0 ~32:22/05/2024

2026/10693 ~ Complete ~54:METHODS AND APPARATUS FOR AN AMBIENT INTERNET OF THINGS (IOT) TEMPORARY IDENTIFIER AT A READER ~71:INTERDIGITAL PATENT HOLDINGS, INC., 200 Bellevue Parkway, Suite 300, Wilmington, Delaware, 19809, United States of America ~72: AL-HARES, Mohamad Kenan;BRUSILOVSKY, Alec;FERDI, Samir;SETHI, Anuj;STARSINIC, Michael;WANG, Guanzhou~ 33:US ~31:18/666,440 ~32:16/05/2024

2026/10589 ~ Provisional ~54:AMBIENT-STABLE LYOPHILISED ARTICLE, PERFUSION SOLUTION AND PROCESS FOR PERFUSING THE BRAIN AT OR AFTER CIRCULATORY ARREST ~71:BRADLEY KYLE DUNCAN, 18 MORGENSTER CRESCENT, South Africa ~72: BRADLEY KYLE DUNCAN~

2026/10594 ~ Provisional ~54:PERFLUOROCARBON EMULSION PERFUSION SOLUTION CONTAINING SODIUM NITRITE, AND KIT AND SYSTEM FOR PERFUSING THE BRAIN AFTER CIRCULATORY ARREST ~71:BRADLEY KYLE DUNCAN, 18 MORGENSTER CRESCENT, South Africa ~72: BRADLEY KYLE DUNCAN~

2026/10603 ~ Provisional ~54:OXYGEN-CARRIER-FREE LACTATE AND PYRUVATE PERFUSION SOLUTION, AND KIT AND SYSTEM FOR MEMBRANE-OXYGENATED PERFUSION OF THE BRAIN AFTER CIRCULATORY ARREST ~71:BRADLEY KYLE DUNCAN, 18 MORGENSTER CRESCENT, South Africa ~72: BRADLEY KYLE DUNCAN~

2026/10609 ~ Provisional ~54:DIRECT-SUCTION CHEMICAL TRANSFER AND METERED DOSING SYSTEM ~71:Upex Africa (Pty) Ltd, 8 Distillery Street, South Africa ~72: SHAW, Jason;VAN SCHALKWYK, Calvin~

2026/10611 ~ Provisional ~54:AS PER ANNEXURE A ~71:Peter Bonner, 8 de GAULLE CRESCENT, South Africa ~72: Peter Bonner~ 33:ZA ~31:None ~32:28/10/2026

2026/10616 ~ Complete ~54:A NATURAL FERMENTATION METHOD FOR PREPARING A HIGHLY ACTIVE HAWTHORN EXTRACT ~71:Guizhou Longzibao Biotechnology Co., Ltd, Modern Mountain Agroforestry Science and Technology Industrial Park, Yanshan Town, Guiding County, Qiannan Prefecture, Guizhou Province, People's Republic of China ~72: Liu ShuiBo;Yang Jing~

2026/10588 ~ Provisional ~54:DUAL-BUFFERED, ENZYME-ASSISTED PERFLUOROCARBON PERFUSION SOLUTION AND PERFUSION SYSTEM FOR THE BRAIN AFTER CIRCULATORY ARREST ~71:BRADLEY KYLE DUNCAN, 18 MORGENSTER CRESCENT, South Africa ~72: BRADLEY KYLE DUNCAN~

2026/10591 ~ Provisional ~54:GLYCOCALYX-STABILISING PERFUSION SOLUTION CONTAINING AN IMPERMEANT ANION, A CROSS-LINKED ALBUMIN COLLOID, A HEPARINOID AND A LOW-MOLECULAR-WEIGHT DEXTRAN, FOR REOPENING COLLAPSED CEREBRAL CAPILLARIES ~71:BRADLEY KYLE DUNCAN, 18 MORGENSTER CRESCENT, South Africa ~72: BRADLEY KYLE DUNCAN~

2026/10595 ~ Provisional ~54:OXYGEN-CARRIER-FREE PERFUSION SOLUTION STABILISED AGAINST ICE INJURY FOR FROZEN STORAGE AND LATER DEPLOYMENT ~71:BRADLEY KYLE DUNCAN, 18 MORGENSTER CRESCENT, South Africa ~72: BRADLEY KYLE DUNCAN~

2026/10586 ~ Provisional ~54:CANNULATION DEVICE AND CANNULA CARTRIDGE FOR RAPID VASCULAR ACCESS ~71:BRADLEY KYLE DUNCAN, 18 MORGENSTER CRESCENT, South Africa ~72: BRADLEY KYLE DUNCAN~

2026/10599 ~ Provisional ~54:LIPOSOME-ENCAPSULATED HAEMOGLOBIN PERFUSATE WITH AN IRON CHELATOR AND A STARCH COLLOID, AND KIT AND PROCESS FOR PREPARING IT ~71:BRADLEY KYLE DUNCAN, 18 MORGENSTER CRESCENT, South Africa ~72: BRADLEY KYLE DUNCAN~

2026/10605 ~ Provisional ~54:MULTI-PLATFORM WEARABLE EARLY WARNING DETECTION LOGIC AND THREAT RESPONSE ECOSYSTEM ~71:TASNEEM MONINE XAKI, 152 St Georges Street, South Africa ~72: TASNEEM MONINE XAKI~

2026/10607 ~ Provisional ~54:SYSTEM AND METHOD FOR DEVICE-ENFORCED PAY-OVER-TIME TRANSACTIONS USING CRYPTOGRAPHICALLY BOUND DEVICE PAYMENT ENTITLEMENTS ~71:BitPayTech, 60 Riviera Road, South Africa ~72: Bernardus Bezuidenhout;Brian Maw~

2026/10614 ~ Complete ~54:ZIPPER-TYPE PATIENT GOWN FOR PICC CATHETER MAINTENANCE ~71:SHENZHEN HOSPITAL (FUTIAN) OF GUANGZHOU UNIVERSITY OF CHINESE MEDICINE, No. 6001 Beihuan Avenue, Futian District, Shenzhen, Guangdong, 518034, People's Republic of China ~72: Tiantian Yao;Xiao Li;Xiaohong Liu~

2026/10618 ~ Complete ~54:ICE-SEPARATING INSERT FOR A RAIN GUTTER ~71:POZHIDAEVA Alina Vadimovna, Tagilskaya St. 4, Apt. 765, Moscow, 107143, Russian Federation ~72: POZHIDAEVA Alina Vadimovna~ 33:RU ~31:2026125470 ~32:19/08/2026

2026/10619 ~ Complete ~54:ROOF EAVES ELEMENT FOR PREVENTING AN ICE DAM ~71:Pozhidaeva Alina Vadimovna, Tagilskaya St. 4, Apt. 765, Moscow, 107143, Russian Federation ~72: Pozhidaeva Alina Vadimovna~ 33:RU ~31:2026125592 ~32:20/08/2026

2026/10622 ~ Complete ~54:REMOVABLE LINT-FIRE CASSETTE FOR A TUMBLE DRYER ~71:Pozhidaeva Alina Vadimovna, Tagilskaya St. 4, Apt. 765, Moscow, 107143, Russian Federation ~72: Pozhidaeva Alina Vadimovna~ 33:RU ~31:2026125540 ~32:20/08/2026

2026/10623 ~ Complete ~54:EDGE ANTI-ICING MODULE FOR A SOLAR PANEL WITH A REMOTE ICE-COLLECTING RAIL ~71:POZHIDAEVA Alina Vadimovna, Tagilskaya St. 4, Apt. 765, Moscow, 107143, Russian Federation ~72: POZHIDAEVA Alina Vadimovna~ 33:RU ~31:2026125480 ~32:19/08/2026

2026/10627 ~ Complete ~54:OUTDOOR CLIMATE UNIT WITH A PASSIVE ICE-FORMING CASSETTE ~71:POZHIDAEVA Alina Vadimovna, Tagilskaya St. 4, Apt. 765, Moscow, 107143, Russian Federation ~72: POZHIDAEVA Alina Vadimovna~ 33:RU ~31:2026125491 ~32:19/08/2026

2026/10629 ~ Complete ~54:ADJUSTABLE EQUIPMENT MOUNTING RACK FOR ECONOMIC MANAGEMENT LABORATORY ~71:Wuhan Polytechnic University, No. 68 Xuefu South Road, Changqing Garden, Hankou, Wuhan City, Hubei Province, People's Republic of China ~72: ZHANG Linxia~

2026/10637 ~ Complete ~54:AN EXPLAINABLE DEFECT VISUALIZATION AND DETECTION SYSTEM ~71:Vishwakarma Institute of Technology, 666, Upper Market RD, Upper Indira Nagar, Bibwewadi, Pune, Maharashtra, 411037, India;Vishwakarma University, Survey No 2 3, 4, Kondhwa Main Rd, Laxmi Nagar, Betal Nagar, Kondhwa, Pune, Maharashtra, 411048, India ~72: BABHULKAR, Dnyanesh Ravindra;BHAGWAT, Smita;CHAVAN, Rohini;DIXIT, Siddharth Kapil;GANDHI, Dhwani Vinay~

2026/10647 ~ Complete ~54:A BATTERYLESS, HIGH-VISIBILITY SMART HELMET SIGNALING SYSTEM ~71:Vishwakarma Institute of Technology, 666, Upper Market RD, Upper Indira Nagar, Bibwewadi, Pune, Maharashtra, 411037, India;Vishwakarma University, Survey No 2 3, 4, Kondhwa Main Rd, Laxmi Nagar, Betal Nagar, Kondhwa, Pune, Maharashtra, 411048, India ~72: JAHAGIRDAR, Aditya;PAWAR, Shital;PHANSALKAR, Shreyas;PUSHPA~

2026/10652 ~ Complete ~54:AGENTIC AI SYSTEM FOR ADAPTIVE CLOUD RECONFIGURATION AND AUTOMATED THREAT CONTAINMENT IN FINANCIAL COMPUTING INFRASTRUCTURE ~71:NOVMAN MOHAMMED, Independent Researcher , Information Technology University Of the Cumberlands, 1700 Meadow Trail lane, Aubrey, Texas, 76227, United States of America ~72: NOVMAN MOHAMMED~ 33:IN ~31:202611128059 ~32:27/10/2026

2026/10657 ~ Complete ~54:A THERMAL MOTOR PROTECTION SYSTEM USING MULTI-SENSOR FUSION FOR HOME APPLIANCES ~71:Vishwakarma Institute of Technology, 666, Upper Market RD, Upper Indira Nagar, Bibwewadi, Pune, Maharashtra, 411037, India;Vishwakarma University, Survey No 2 3, 4, Kondhwa Main Rd, Laxmi Nagar, Betal Nagar, Kondhwa, Pune, Maharashtra, 411048, India ~72: HAGAWANE, Soham Dilip;JOSHI, Arya Prashant;KULKARNI, Jayant Venkatrao;PATANKAR, Sanika Sarang;PINGALE, Ved Yogesh;SHINDE, Sankalp Sandip;VYAVAHARE, Soham Santosh~

2026/10668 ~ Complete ~54:AN IOT-BASED SMART PREDICTIVE MAINTENANCE SYSTEM FOR MACHINE HEALTH MONITORING ~71:Vishwakarma Institute of Technology, 666, Upper Market RD, Upper Indira Nagar, Bibwewadi, Pune, Maharashtra, 411037, India;Vishwakarma University, Survey No 2 3, 4, Kondhwa Main Rd, Laxmi Nagar, Betal Nagar, Kondhwa, Pune, Maharashtra, 411048, India ~72: PATIL, Shobha Mahendrakumar;SUKALE, Rohit Sudhir;THOPATE, Kaushlya Vaibhav~

2026/10672 ~ Complete ~54:A GRAPH NEURAL NETWORK BASED METHOD FOR DRUG-DISEASE INTERACTION PREDICTION USING BIOMEDICAL NETWORK TOPOLOGY ~71:Vishwakarma Institute of Technology, 666, Upper Market RD, Upper Indira Nagar, Bibwewadi, Pune, Maharashtra, 411037, India;Vishwakarma University, Survey No 2 3, 4, Kondhwa Main Rd, Laxmi Nagar, Betal Nagar, Kondhwa, Pune, Maharashtra, 411048, India ~72: BADGUJAR, Niramay Suresh;BAMB, Rushikesh Chaggan;BHOITE, Sonali;JADHAV, Shubham Siddeshwar;KULKARNI, Shlok Dhanesh;NAYAKWADI, Vishal N~

2026/10677 ~ Complete ~54:ILLUMINATED RETICLE AIMING POINT ~71:SHELTERED WINGS, INC. d/b/a VORTEX OPTICS, ONE VORTEX DRIVE, BARNEVELD, WI 53507, USA, United States of America ~72: BENSON, Christian;HELTEMES, Joseph;MCDERMOT, Connor~ 33:US ~31:63/632,548 ~32:11/04/2024

2026/10682 ~ Complete ~54:A METHOD FOR MATING DISRUPTION OF INSECTS PESTS USING SEMIOCHEMICALS ~71:GORANTLA, Markandeya, Plot no. 1, Mahalakshmi, Residency, Kompally, Hyderabad, Telangana 500 014, India ~72: GORANTLA, Markandeya~ 33:IN ~31:202441027465 ~32:03/04/2024

2026/10684 ~ Complete ~54:MITIGATING DECOMMISSIONED-NETWORK BIDDING-DOWN ATTACKS IN A WIRELESS SYSTEM ~71:KONINKLIJKE PHILIPS N.V., High Tech Campus 34, EINDHOVEN 5656 AE, THE NETHERLANDS, Netherlands ~72: GARCIA MORCHON, Oscar;SABAH, Noureddine~ 33:EP ~31:24168843.1 ~32:05/04/2024;33:EP ~31:24174681.7 ~32:07/05/2024;33:EP ~31:24187865.1 ~32:10/07/2024;33:EP ~31:24195973.3 ~32:22/08/2024;33:EP ~31:24210422.2 ~32:01/11/2024;33:EP ~31:25158889.3 ~32:19/02/2025

2026/10687 ~ Complete ~54:SCRAPER BLADE FOR CONE CRUSHER ~71:SANDVIK SRP AB, SVEDALA 23381, SWEDEN, Sweden ~72: FRIMAN, André~ 33:EP ~31:24175646.9 ~32:14/05/2024

2026/10690 ~ Complete ~54:CLOSING CAP FOR CONTAINERS ~71:SACMI COOPERATIVA MECCANICI IMOLA SOCIETÀ COOPERATIVA, Via Selice Provinciale 17/A, 40026, Imola (Bologna), Italy ~72: MAZZOTTI, Giovanni;PARRINELLO, Fiorenzo;PUCCI, Fabrizio~ 33:IT ~31:102024000016207 ~32:12/07/2024

2026/10590 ~ Provisional ~54:HAEMOGLOBIN-FREE PERFLUOROCARBON PERFUSION SOLUTION CONTAINING AN IRON CHELATOR, A RADICAL-TRAPPING ANTIOXIDANT AND A SELENIUM COMPOUND, AND PERFUSION SYSTEM THEREFOR ~71:BRADLEY KYLE DUNCAN, 18 MORGENSTER CRESCENT, South Africa ~72: BRADLEY KYLE DUNCAN~

2026/10597 ~ Provisional ~54:STAGED PERFUSION KIT HAVING AN IRON- AND CALCIUM-CHELATING FIRST PERFUSATE AND A PERFLUOROCARBON-EMULSION SECOND PERFUSATE, AND PROCESS FOR PREPARING IT ~71:BRADLEY KYLE DUNCAN, 18 MORGENSTER CRESCENT, South Africa ~72: BRADLEY KYLE DUNCAN~

2026/10601 ~ Provisional ~54:PERFUSION SOLUTION HAVING A CYCLODEXTRIN-COMPLEXED SODIUM CHANNEL BLOCKER REMOVABLE BY A SEQUESTRATION CARTRIDGE, AND PERFUSION SYSTEM THEREFOR ~71:BRADLEY KYLE DUNCAN, 18 MORGENSTER CRESCENT, South Africa ~72: BRADLEY KYLE DUNCAN~

2026/10606 ~ Provisional ~54:MOBILE TRUCK AND TRAILER MOUNTED BATTERY ENERGY STORAGE SYSTEM (BESS) AND OPERATIONAL PROCESS FOR INDUSTRIAL AND MINING POWER DISPATCH ~71:Molefi Simon Peter Ntoeba, 60 , Nqomo street, Postmasburg. Northern Cape, South Africa;Oreconnect Projects, Industrial Park, South Africa ~72: Molefi Simon Peter Ntoeba;Oreconnect Projects~

2026/10613 ~ Provisional ~54:INTELLIGENT SUPERSONIC RESEARCH AIRCRAFT WITH ROCKET-DERIVED THERMAL MANAGEMENT, MODULAR PROPULSION MONITORING, ADAPTIVE FLIGHT CONTROL ~71:Ahmed Waseef Saib, 24 Park Avenue , Desainagar, South Africa ~72: Ahmed Waseef Saib~

2026/10617 ~ Complete ~54:TRAY OF AN OUTDOOR CLIMATE UNIT WITH ZONES OF LOCALIZED FREEZING ~71:POZHIDAEVA Alina Vadimovna, Tagilskaya St. 4, Apt. 765, Moscow, 107143, Russian Federation ~72: POZHIDAEVA Alina Vadimovna~ 33:RU ~31:2026125464 ~32:19/08/2026

2026/10630 ~ Complete ~54:WHILE-DRILLING FEEDBACK-DRIVEN ADAPTIVE CORRECTION METHOD AND SYSTEM FOR NON-METALLIC ORE GRADE BLOCKS ~71:CNBM SOUTHWEST GEOTECHNICAL INVESTIGATION & SURVEY & DESIGN CO., LTD., No. 67 Luo Guo Xiang, Qingyang District, Chengdu City, Sichuan, 610017, People's Republic of China ~72: CHEN, Haijun;LUO, Wei;MA, Yuan;SUN, Tiegang;WANG, Lin;WANG, You;XI, Wang;YU, Xiaoyan;ZHANG, Xu;ZHOU, Chengjiao~ 33:CN ~31:2026108829932 ~32:18/06/2026

2026/10632 ~ Complete ~54:AN INTELLIGENT CLOUD-BASED HEALTHCARE PLATFORM ~71:Vishwakarma Institute of Technology, 666, Upper Market RD, Upper Indira Nagar, Bibwewadi, Pune, Maharashtra, 411037, India;Vishwakarma University, Survey No 2 3, 4, Kondhwa Main Rd, Laxmi Nagar, Betal Nagar, Kondhwa, Pune, Maharashtra, 411048, India ~72: DESHMUKH, Sanyukta;KOUL, Parth;PANZADE, Parag;PARYANI, Krishna;PASARKAR, Vedant~

2026/10633 ~ Complete ~54:AN EMOTION-AWARE MUSIC RECOMMENDATION SYSTEM USING CONVOLUTIONAL NEURAL NETWORKS AND ADAPTIVE USER EMOTION ANALYSIS ~71:Vishwakarma Institute of Technology, 666, Upper Market RD, Upper Indira Nagar, Bibwewadi, Pune, Maharashtra, 411037, India;Vishwakarma University, Survey No 2 3, 4, Kondhwa Main Rd, Laxmi Nagar, Betal Nagar, Kondhwa, Pune, Maharashtra, 411048, India ~72: BAGADE, Arya Manish;BELHE, Sayali Aditya;HARALE, Arpita Ashish;JAIN, Arin;MANGRULKAR, Arnav;PATIL, Arush Vidyadhar~

2026/10636 ~ Complete ~54:AN AI-DRIVEN ENTERPRISE ALERT MANAGEMENT AND ANOMALY DETECTION ~71:Vishwakarma Institute of Technology, 666, Upper Market RD, Upper Indira Nagar, Bibwewadi, Pune, Maharashtra, 411037, India;Vishwakarma University, Survey No 2 3, 4, Kondhwa Main Rd, Laxmi Nagar, Betal Nagar, Kondhwa, Pune, Maharashtra, 411048, India ~72: DESAI, Prasad;DONGRE, Shital Parag;GADHIRE, Sahil;GOLE, Siddhesh;JADHAV, Ayush;LANJEWAR, Ganesh~

2026/10642 ~ Complete ~54:AN AUTOMATED SMART WATERING SYSTEM FOR EFFICIENT PLANT IRRIGATION ~71:Vishwakarma Institute of Technology, 666, Upper Market RD, Upper Indira Nagar, Bibwewadi, Pune, Maharashtra, 411037, India;Vishwakarma University, Survey No 2 3, 4, Kondhwa Main Rd, Laxmi Nagar, Betal Nagar, Kondhwa, Pune, Maharashtra, 411048, India ~72: DIKE, Arnav;HAJARE, Dikshita;PATIL, Suvarna;SAHEJWANI, Disha;WANKHADE, Divyanshu~

. - APPLIED ON 2026/11/05 -

2026/10700 ~ Provisional ~54:AIRFLOW DEFLECTION DEVICE ~71:Luigi Vittorio Christopher Serafini, 65 Seventh st, Parkmore, South Africa ~72: Luigi Vittorio Christopher Serafini;Luigi Vittorio Christopher Serafini~

2026/10706 ~ Provisional ~54:COMPUTER-IMPLEMENTED MERCHANT COMMERCE AND ORDER FULFILMENT SYSTEM. ~71:Q-SKIP (PTY) LTD, Bunting Road, Falcon Street, South Africa ~72: Asive Majuqulwana~

2026/10726 ~ Complete ~54:TREATING INFLAMMATORY COMMON VARIABLE IMMUNODEFICIENCY WITH A BRUTON'S TYROSINE KINASE INHIBITOR ~71:ICAHN SCHOOL OF MEDICINE AT MOUNT SINAI, One Gustave L. Levy Place, New York, United States of America ~72: CUNNINGHAM RUNDLES, Charlotte;HO, Hsi-En;RADIGAN, Lin K.~ 33:US ~31:63/631,500 ~32:09/04/2024

2026/10738 ~ Complete ~54:CONTEXT MANAGEMENT FOR AIOT ~71:INTERDIGITAL PATENT HOLDINGS, INC., 200 Bellevue Parkway, Suite 300, Wilmington, Delaware, 19809, United States of America ~72: BALA, Erdem;EL HAMSS, Aata;FREDA, Martino;HONG, Jongwoo;KOIRALA, Remun;LEE, Moon IL;MARINIER, Paul;MARTIN, Brian;PELLETIER, Ghyslain~ 33:US ~31:63/643,186 ~32:06/05/2024

2026/10747 ~ Provisional ~54:OVER-CAP LOCKING COVER FOR CYLINDRICAL BOTTLES ~71:AISE (Pty) Ltd, 834 Tiervis street, Garsfontein, South Africa ~72: RATILOVSKIY PAVEL PETROVICH;SHATALOV YURI MIKHAILOVICH~

2026/10733 ~ Complete ~54:GP130 ANTIGEN-BINDING MOLECULES ~71:VVB BIO PTE. LTD., 11 Collyer Quay, #17-00 The Arcade, Singapore ~72: COOK, Stuart Alexander;SCHAEFER, Sebastian~ 33:GB ~31:2408044.2 ~32:06/06/2024

2026/10735 ~ Complete ~54:ISOXAZOLINE COMPOUND AND USE THEREOF ~71:QILU ANIMAL HEALTH PRODUCTS CO., LTD., No. 10688, Wenliang Road, Dongjia Town, Licheng District, Jinan, Shandong, 250105, People's Republic of China;QILU PHARMACEUTICAL CO., LTD., No.317, Xinluo Street, High Technical Zone , Jinan, Shandong, 250100, People's Republic of China ~72: FAN, Chuanwen;FANG, Mingfeng;KONG, Mei;LIU, Quancai;MA, Qingzhu;ZHENG, Huanqing;ZHOU, Shiyu~ 33:CN ~31:202410482503.0 ~32:19/04/2024;33:CN ~31:202410961683.0 ~32:17/07/2024;33:CN ~31:202510285881.4 ~32:11/03/2025;33:CN ~31:202510465216.3 ~32:11/04/2025

2026/10739 ~ Complete ~54:A SOAP BAR COMPOSITION ~71:UNILEVER GLOBAL IP LIMITED, Port Sunlight, Wirral, Merseyside, CH62 4ZD, United Kingdom ~72: BAPAT, Mohini Anand;DAMODARAN, Anita;GHATLIA, Naresh Dhirajlal;MAJUMDAR, Amitabha;MATHAPATHI, Mruthyunjaya Swamy;PATTANAIK, Amit;SETHNA, Simone~ 33:EP ~31:24182978.7 ~32:19/06/2024

2026/10741 ~ Complete ~54:BEAMFORMING INFORMATION PERSISTENCE AT A STATION ~71:OFINNO, LLC, 1950 Opportunity Way, Suite 1200, Reston, Virginia 20190, United States of America ~72: BAYKAS, Tuncer;DINAN, Esmael Hejazi;ERKUCUK, Serhat;KIM, Jeongki;LANANTE, Leonardo Alisasis;ZHANG, Jiayi~ 33:US ~31:63/632,848 ~32:11/04/2024

2026/10695 ~ Provisional ~54:MISSION-ADAPTIVE SUPERSONIC AIRCRAFT PROPULSION SYSTEM WITH VARIABLE-GEOMETRY AIR INTAKE, MULTI-STREAM ADAPTIVE-CYCLE TURBOFAN, INTEGRATED THERMAL MANAGEMENT, EXHAUST ENERGY RECOVERY AND INTELLIGENT PROPULSION COORDINATION ~71:Ahmed Waseef Saib, 24 Park Avenue , Desainagar, South Africa ~72: Ahmed Waseef Saib~

2026/10697 ~ Provisional ~54:WEARABLE ARTIFICIAL-INTELLIGENCE COMPANION SYSTEM WITH REAL-WORLD EXPERIENCE, PERSISTENT MEMORY, ADAPTIVE EVOLUTION, AND MULTIMODAL INTERACTION ~71:Ahmed Waseef Saib, 24 Park Avenue , Desainagar, South Africa ~72: Ahmed Waseef Saib~

2026/10722 ~ Complete ~54:USE OF SOYBEAN BSP FAMILY GENE GLYMA.20G130000.1 FOR IMPROVING RESISTANCE OF SOYBEAN TO PHYTOPHTHORA SOJAE ROOT AND STEM ROT (PSRR) ~71:Nanjing Agricultural University, No. 666, Binjiang Avenue, Nanjing Jiangbei New Area, Jiangsu Province, 211800, People's Republic of China ~72: CHEN, Bing;CHEN, Ping;CHEN, Xi;DAI, Huanhuan;MA, Ji;MA, Zhenchuan;RUI, Jianteng;TAO, Xiaorong;WANG, Yuanchao;WEI, Jiajian;WU, Xinyi;YOU, Haixia;ZHANG, Qi~ 33:CN ~31:2026107537405 ~32:28/05/2026

2026/10737 ~ Complete ~54:TREATMENT OF CANCER WITH PYRIMIDOHETEROCYCLIC COMPOUNDS ~71:D3 BIO (WUXI) CO., LTD., Room 324, 88 MeiLiang Road, MaShan Street, BinHu District Wuxi, Jiangsu, 214092, People's Republic of China ~72: CHEN, Cheng;CHEN, Qian;CHEN, Zhi Jian;FAN, Zifei;RUI, Haopeng;SHEN, Yandong;WANG, Hui;WANG, Jia;WANG, Wenqian;ZHANG, Jing~ 33:CN ~31:PCT/CN2024/091467 ~32:07/05/2024;33:CN ~31:202510555847.4 ~32:28/04/2025;33:CN ~31:PCT/CN2025/092384 ~32:30/04/2025

2026/10705 ~ Provisional ~54:STAND FOR A GUIDED-ROD KNIFE-SHARPENING CLAMP ~71:WILLEM CILIUS LOUIS JORDAAN, 74 Smit Street, South Africa ~72: WILLEM CILIUS LOUIS JORDAAN~

2026/10729 ~ Complete ~54:CONTROLLING PROTECTIVE COVER OF A SCANNING DEVICE OF A DRILL RIG ~71:SANDVIK MINING AND CONSTRUCTION OY, Pihtisulunkatu 9, TAMPERE 33330, FINLAND, Finland ~72: LAHTINEN, Juha;NASKALI, Juuso;RAUHALA, Riku~ 33:EP ~31:24184310.1 ~32:25/06/2024

2026/10734 ~ Complete ~54:BARRIER ~71:COCHRANE USA INC., 3551 Lee Hill Dr., Fredericksburg, United States of America ~72: COCHRANE, Alexander Richard~ 33:ZA ~31:2024/03517 ~32:08/05/2024

2026/10740 ~ Complete ~54:PROCESS FOR PREPARATION OF TARGETED LIPID NANOPARTICLES ~71:AERA THERAPEUTICS, INC., 300 Technology Square, Cambridge, Massachusetts, 02139, United States of America ~72: DORKIN, Robert;TIAN, Jingyuan;ZHENG, Mengmeng~ 33:US ~31:63/653,684 ~32:30/05/2024

2026/10709 ~ Complete ~54:SALT-RESISTANT EARLY-STRENGTH ANTI-CRACKING PLANT-MIXED COLD RECYCLED CEMENT-STABILIZED MATERIAL AND PREPARATION METHOD THEREFOR ~71:Xinjiang Transportat Investment Construction Management Co., Ltd., No. 78 Yutian Street, Shayibake District, Urumqi, Xinjiang, People's Republic of China;Xinjiang Transportation Investment (Group) Co., Ltd., No. 301, Huanghe Road, Shayibake District, Urumqi, Xinjiang, People's Republic of China ~72: Chaohui WANG;Fan XU;Guanghui ZHANG;Hua FANG;Ke SANG;Le WANG;Penghui WEN;Tuerxunjiang;Yonglin MA;Yubei LIU;Yunhua DONG;Zhuohang YANG~ 33:CN ~31:202511989164.6 ~32:26/12/2025

2026/10713 ~ Complete ~54:AI-BASED HEIR IDENTIFICATION, VERIFICATION AND DIGITAL REGISTRATION SYSTEM ~71:CT Institute of Engineering, Management & Technology, Shahpur, Jalandhar, Punjab, 144020, India;CT Institute of Management and IT, Maqsudan, Jalandhar, Punjab, 144008, India;CT Institute of Technology and Research, Maqsudan, Jalandhar, Punjab, 144008, India;CT University, School of Engineering and Technology, Ferozpur Rd, Sidhwan Khurd, Ludhiana, Punjab, 142024, India;CT University, School of Management Studies, Ferozpur Rd, Sidhwan Khurd, Ludhiana, Punjab, 142024, India ~72: Dr. Anju Bala;Dr. Manbir Singh;Dr. Mudasir Ahmad Tass;Dr. Nittan Arora;Er.Ramandeep Kaur;Harinder Pal Singh Bassi~

2026/10715 ~ Complete ~54:AI-DRIVEN REGIONAL BLOOD GROUP PREDICTION AND GEOSPATIAL DISTRIBUTION SYSTEM ~71:CT College of Pharmacy, Shahpur, Jalandhar, Punjab, 144020, India;CT Institute of Engineering, Management & Technology, Shahpur, Jalandhar, Punjab, 144020, India;CT Institute of Pharmaceutical Sciences, Shahpur, Jalandhar, Punjab, 144020, India;CT Institute of Technology and Research, Maqsudan, Jalandhar, Punjab, 144008, India;CT University, School of Engineering and Technology, Ferozpur Rd, Sidhwan Khurd, Ludhiana, Punjab, 142024, India;CT University, School of Pharmaceutical Sciences, Ferozpur Rd, Sidhwan Khurd, Ludhiana, Punjab, 142024, India ~72: Aditi Rana;Davinder Singh;Dr. Jayaashish Shadiram Sethi;Dr. Nitin Tandon;Dr. Tahir Bashir Khan;Rajesh Gautam~

2026/10727 ~ Complete ~54:STACKABLE PLASTIC PLATFORM COMPRISING A TRACKING DEVICE, METHOD FOR TRACKING A PLATFORM AND ASSOCIATED STORAGE MEDIA ~71:CHEP TECHNOLOGY PTY LIMITED, Level 29, 255 George Street, Sydney, Australia ~72: DAUBENSPECK, Bradley Wayne;SANKAR, Nigel~ 33:US ~31:18/662,529 ~32:13/05/2024

2026/10736 ~ Complete ~54:ANTIBODY, ANTIBODY-DRUG CONJUGATE, AND USE ~71:MEDILINK THERAPEUTICS (SUZHOU) CO., LTD., Unit 101, Block B3, Biology Industrial Park, No. 218 Xinghu Street, Suzhou Industrial Park, Suzhou Area of China (Jiangsu) Pilot Free Trade Zone Suzhou, Jiangsu, 215000, People's Republic of China ~72: CAI, Jiaqiang;DENG, Chun;DENG, Hanwen;LIAN, Wei;LIU, Le;REN, Qi;SHI, Xinzhen;WANG, Zixu;XIAO, Liang;XUE, Tongtong;ZONG, Qing;ZOU, Peng~ 33:CN ~31:202410543517.9 ~32:30/04/2024;33:CN ~31:202410977507.6 ~32:19/07/2024;33:CN ~31:202411126106.6 ~32:16/08/2024;33:CN ~31:202510354739.0 ~32:25/03/2025

2026/10707 ~ Complete ~54:PREPARATION METHOD AND APPLICATION OF TRADITIONAL CHINESE MEDICINE COMPOSITION FOR BEAUTIFYING SKIN AND REMOVING FRECKLES ~71:Jieling Zhang, No. 6 Juxing Street, Huangpu Town, Zhongshan City, Guangdong Province, People's Republic of China ~72: Jieling Zhang~

2026/10710 ~ Complete ~54:AI-BASED PLANT DISEASE DETECTION AND PROGRESSION PREDICTION USING MULTISPECTRAL IMAGING ~71:CT Institute of Engineering, Management & Technology, Shahpur, Jalandhar, Punjab, 144020, India;CT Institute of Technology and Research, Maqsudan, Jalandhar, Punjab, 144008, India;CT University, School of Engineering and Technology, Ferozpur Rd, Sidhwan Khurd, Ludhiana, Punjab, 142024, India ~72: Dr. Anurag Sharma;Dr. Rupali Dhir;Dr. Sandeep Ranjan~

2026/10712 ~ Complete ~54:AI-BASED HEREDITARY DISEASE RISK PREDICTION AND MULTI-GENERATIONAL HEALTH INFORMATION SHARING ~71:CT College of Pharmacy, Shahpur, Jalandhar, Punjab, 144020, India;CT Institute of Engineering, Management & Technology, Shahpur, Jalandhar, Punjab, 144020, India;CT Institute of Pharmaceutical Sciences, Shahpur, Jalandhar, Punjab, 144020, India;CT Institute of Technology and Research, Maqsudan, Jalandhar, Punjab, 144008, India;CT University, School of Engineering and Technology, Ferozpur Rd, Sidhwan Khurd, Ludhiana, Punjab, 142024, India;CT University, School of Pharmaceutical Sciences, Ferozpur Rd, Sidhwan Khurd, Ludhiana, Punjab, 142024, India ~72: Amir Raza;Dr. Nitin Tandon;Dr. Prashant Das;Dr. Sapna Sharma;Karuna;Shreya Chauhan~

2026/10717 ~ Complete ~54:HAND-HELD SENSOR DEVICE FOR RAPID DETECTION OF DETERGENT ADULTERATION IN MILK ~71:CT Institute of Engineering, Management & Technology, Shahpur, Jalandhar, Punjab, 144020, India;CT Institute of Technology and Research, Maqsudan, Jalandhar, Punjab, 144008, India;CT University, School of Engineering and Technology, Ferozpur Rd, Sidhwan Khurd, Ludhiana, Punjab, 142024, India ~72: Dr. Anurag Sharma;Dr. Nitin Tandon;Dr. Sandeep Ranjan;Dr. Satvir Singh~

2026/10721 ~ Complete ~54:MATTRESS-BASED INTELLIGENT MONITORING SYSTEM ~71:Beijing Luhe Hospital, Capital Medical University, No. 82, South Xinhua Road, Tongzhou Dist., Beijing, 101100, People's Republic of China ~72: Yuxin Zhou~

2026/10724 ~ Complete ~54:SUPPLY CHAIN SCHEDULING SYSTEM AND METHOD FOR CROSS-BORDER OVERSEAS WAREHOUSE RETURN AND EXCHANGE ~71:Anhui Water Conservancy Technical College, No. 18, Hema Road, Dongmen, Hefei City, Anhui Province, 231603, People's Republic of China ~72: Chen Wang;Jun Ma;Peng Song;Qiyu Sheng;Song Yang;Wei Guo;Wen Tang;Zhenxue Sun~

2026/10725 ~ Complete ~54:STEEL SUITABLE FOR HIGH-TEMPERATURE CARBURIZING AND MANUFACTURING METHOD THEREFOR ~71:BAOSHAN IRON & STEEL CO., LTD., 885 Fujin Road, Baoshan District, Shanghai 201900, People's Republic of China ~72: GAO, Jiaqiang;ZHAO, Sixin~ 33:CN ~31:202410616817.5 ~32:17/05/2024

2026/10696 ~ Provisional ~54:ULTRA-INTELLIGENT AUTONOMOUS WEARABLE ARTIFICIAL INTELLIGENCE CLINICAL EXAMINATION SYSTEM WITH MULTIMODAL PATIENT ASSESSMENT, EDGE COMPUTING, MEDICAL SENSOR FUSION, SPATIAL COMPUTING, DIGITAL PATIENT TWIN, AND CLINICAL DECISION SUPPORT ~71:Ahmed Waseef Saib, 24 Park Avenue , Desainagar, South Africa ~72: Ahmed Waseef Saib~

2026/10698 ~ Provisional ~54:AUTONOMOUS MULTIMODAL ARTIFICIAL-INTELLIGENCE AERIAL TRACKING, PREDICTIVE FLIGHT, CINEMATOGRAPHY, AND CELLULAR CONNECTIVITY SYSTEM ~71:Ahmed Waseef Saib, 24 Park Avenue , Desainagar, South Africa ~72: Ahmed Waseef Saib~

2026/10704 ~ Provisional ~54:WHEEL MANIPULATOR AND WHEEL-HANDLING APPARATUS ~71:Nico CORDIER, Gedeelte 3 Hartebeesfontein KQ 511, South Africa ~72: Nico CORDIER~

2026/10711 ~ Complete ~54:SYSTEM AND METHOD FOR SECURE AI-ASSISTED DIGITAL WILL REGISTRATION ~71:CT Institute of Engineering, Management & Technology, Shahpur, Jalandhar, Punjab, 144020, India;CT Institute of Management and IT, Maqsudan, Jalandhar, Punjab, 144008, India;CT Institute of Technology and Research, Maqsudan, Jalandhar, Punjab, 144008, India;CT University, School of Engineering and Technology, Ferozpur Rd, Sidhwan Khurd, Ludhiana, Punjab, 142024, India;CT University, School of Management Studies, Ferozpur Rd, Sidhwan Khurd, Ludhiana, Punjab, 142024, India ~72: Dr. Ankita Makkar;Dr. Manbir Singh;Dr. Mudasir Ahmad Tass;Dr. Nittan Arora;Dr. Sadhna Chauhan;Dr.Inderpal Singh~

2026/10716 ~ Complete ~54:HYBRID MECHANICAL–KINETIC ENERGY HARVESTING SYSTEM FOR CONTINUOUS ELECTRICITY GENERATION IN BICYCLES ~71:CT Institute of Engineering, Management & Technology, Shahpur, Jalandhar, Punjab, 144020, India;CT Institute of Technology and Research, Maqsudan, Jalandhar, Punjab, 144008, India;CT University, School of Engineering and Technology, Ferozpur Rd, Sidhwan Khurd, Ludhiana, Punjab, 142024, India ~72: Dr. Nitin Tandon;Dr. Satvir Singh;Dr.Gagandeep Singh;Shilpi Dhir~

2026/10742 ~ Provisional ~54:DEPOSIT AND WITHDRAWAL APP ~71:ANDREW MAMABOLO, 224 ODENDAAL ROAD ZONE 3 MEADOWLANDS JOHANNESBURG, South Africa ~72: ANDREW MAMABOLO~

2026/10703 ~ Provisional ~54:VENA BLUE ARK ~71:MBALENTLE KHALAKAHLA, 23 INNER CRESCENT WESTPARK, South Africa ~72: MBALENTLE KHALAKAHLA~

2026/10701 ~ Provisional ~54:METHOD AND APPARATUS FOR SEPARATE ADMISSION OF MAKE-UP AND RECYCLED PROCESS GAS STREAMS TO A ROTARY SORPTION WHEEL ~71:Austin Labuschagne, Tolstraat 35, Enschede, 7534CG, Netherlands ~72: Austin Labuschagne~

2026/10702 ~ Provisional ~54:ABSTÈMIA ABDOMINAL CORE REDUCING AND BODY TONING FITNESS APPARATUS ~71:Mpuse Joseph Ndlovu, 575 Netsianda Street, South Africa ~72: Mpuse Joseph Ndlovu~

2026/10699 ~ Provisional ~54:WATER PURIFICATION SYSTEM WITH FLUID-ISOLATED EXTERNAL ELECTRONICS POD AND DEPTH-FILTRATION PRE-FILTER ASSEMBLY ~71:MATINOVA (Pty) Ltd, 664 Section F, South Africa ~72: Wilfred Thato Mtungwa~

2026/10708 ~ Complete ~54:SYSTEM AND METHOD FOR MANAGING PRESCRIPTIONS ~71:LUBBE, Jacques, PLOT S28, South Africa ~72: LUBBE, Jacques~ 33:ZA ~31:2025/06528 ~32:04/08/2025

2026/10714 ~ Complete ~54:AI-DRIVEN IMMUNIZATION TRACKING, VERIFICATION AND DYNAMIC VACCINATION MANAGEMENT SYSTEM ~71:CT College of Pharmacy, Shahpur, Jalandhar, Punjab, 144020, India;CT Institute of Engineering, Management & Technology, Shahpur, Jalandhar, Punjab, 144020, India;CT Institute of Management and IT, Maqsudan, Jalandhar, Punjab, 144008, India;CT Institute of Pharmaceutical Sciences, Shahpur, Jalandhar, Punjab, 144020, India;CT Institute of Technology and Research, Maqsudan, Jalandhar, Punjab, 144008, India;CT University, School of Engineering and Technology, Ferozpur Rd, Sidhwan Khurd, Ludhiana, Punjab, 142024, India;CT University, School of Management Studies, Ferozpur Rd, Sidhwan Khurd, Ludhiana, Punjab, 142024, India;CT University, School of Pharmaceutical Sciences, Ferozpur Rd, Sidhwan Khurd, Ludhiana, Punjab, 142024, India ~72: Dr. Adish Kumar;Dr. Anju Bala;Dr. Daisy Sharma;Dr. Davinder Kaur;Dr. Manbir Singh;Dr. Priyanka Nanda;Dr. Vir Vikram;Seema Sharma;Swati Singh~

2026/10718 ~ Complete ~54:AUTONOMOUS MULTI-SENSOR ROBOTIC SYSTEM FOR WILD SPECIES IDENTIFICATION AND HABITAT MAPPING ~71:CT Institute of Engineering, Management & Technology, Shahpur, Jalandhar, Punjab, 144020, India;CT Institute of Technology and Research, Maqsudan, Jalandhar, Punjab, 144008, India;CT University, School of Engineering and Technology, Ferozpur Rd, Sidhwan Khurd, Ludhiana, Punjab, 142024, India ~72: Baby Jha;Dr. Harmeet Singh;Shilpi Dhir~

2026/10719 ~ Complete ~54:SYSTEM AND METHOD FOR AI-ASSISTED EVALUATION OF MUCILAGE-PRODUCING PLANTS ~71:CT College of Pharmacy, Shahpur, Jalandhar, Punjab, 144020, India;CT Institute of Engineering, Management & Technology, Shahpur, Jalandhar, Punjab, 144020, India;CT Institute of Pharmaceutical Sciences, Shahpur, Jalandhar, Punjab, 144020, India;CT Institute of Technology and Research, Maqsudan, Jalandhar, Punjab, 144008, India;CT University, School of Engineering and Technology, Ferozpur Rd, Sidhwan Khurd, Ludhiana, Punjab, 142024, India;CT University, School of Pharmaceutical Sciences, Ferozpur Rd, Sidhwan Khurd, Ludhiana, Punjab, 142024, India ~72: Anjali Dixit;Dr. Ankita Gupta;Dr. Anu Arora;Dr. Nitin Tandon;Dr. Satvir Singh;Gaurav Thakur;Sahilpreet Singh~

2026/10720 ~ Complete ~54:PEER-TO-PEER EXCHANGE OF AUTHORITY-VERIFIED IDENTITY PROOFS ~71:MBADALIGA, Theobald Ayatolla, 43 Waterbessie Street, LOUIS TRICHARDT 0920, Limpopo Province, SOUTH AFRICA, South Africa ~72: MBADALIGA, Theobald Ayatolla~ 33:ZA ~31:2025/09570 ~32:12/11/2025

2026/10723 ~ Complete ~54:USE OF SOYBEAN BSP FAMILY GENE GLYMA.10G261200.2 FOR IMPROVING RESISTANCE OF SOYBEAN TO PHYTOPHTHORA SOJAE ROOT AND STEM ROT (PSRR) ~71:Nanjing Agricultural University, No. 666, Binjiang Avenue, Nanjing Jiangbei New Area, Jiangsu Province, 211800, People's Republic of China ~72: CHEN, Bing;CHEN, Ping;CHEN, Xi;DAI, Huanhuan;MA, Ji;MA, Zhenchuan;RUI, Jianteng;TAO, Xiaorong;WANG, Yuanchao;WEI, Jiajian;WU, Xinyi;YOU, Haixia;ZHANG, Qi~ 33:CN ~31:2026107520584 ~32:28/05/2026

2026/10730 ~ Complete ~54:SPLINE ALIGNMENT FOR DTH HAMMER ASSEMBLY ~71:SANDVIK MINING AND CONSTRUCTION OY, Pihtisulunkatu 9, TAMPERE 33330, FINLAND, Finland ~72: BRUANDET, Olivier;KOSKINEN, Jouni~ 33:EP ~31:24182804.5 ~32:18/06/2024

2026/10731 ~ Complete ~54:A MIXTURE COMPRISING FLORPYRAUXIFEN AND A SAFENER ~71:ADAMA AGAN LTD., P.O. Box 262, Northern Industrial Zone, ASHDOD 7710201, ISRAEL, Israel ~72: ESCRIBANO-VANACLOCHA, Juan A.;SPERLING, Shani~ 33:EP ~31:24382495.0 ~32:06/05/2024

2026/10728 ~ Complete ~54:JET FUEL COMPONENT ~71:SHELL INTERNATIONALE RESEARCH MAATSCHAPPIJ B.V., Carel van Bylandtlaan 30, HR The Hague, Netherlands ~72: BAUR, Richard;BENNIS, Hanane Belmokaddem;CRACKNELL, Roger Francis;CREYGHTON, Edward Julius;DE DEUGD, Ronald Martijn;GU, Zhenning;KUNKELER, Paul Johannes;RASHIDMANESH, Karim;SHEA, Timothy Michael;SINHA, Nishant K;VAN DOESBURG, Edmundo Steven~ 33:IN ~31:202411041846 ~32:29/05/2024;33:EP ~31:24195854.5 ~32:22/08/2024

2026/10732 ~ Complete ~54:A NON-HEAT TREATED COLD ROLLED SUPER PLASTIC LOW DENSITY STEEL SHEET AND A METHOD OF PRODUCTION THEREOF ~71:ARCELORMITTAL, 24-26 Boulevard d'Avranches, Luxembourg ~72: Pascal LORENZINI;Xavier GARAT~

. - APPLIED ON 2026/11/06 -

2026/10755 ~ Provisional ~54:SOIL SENSE ~71:Mbalentle Khalakahla, 23 inner crescent westpark, South Africa;Mbalentle khalakahla, 23 inner crescent westpark, South Africa ~72: Mbalentle khalakahla;Mbalentle khalakahla~

2026/10775 ~ Complete ~54:HYBRID SYSTEM FOR PRODUCING ALCOHOLIC BEVERAGES UNDER CONSTANT PRESSURE ~71:AURIC BARRELS D.O.O., Vatroslava Lisinskog 65, Croatia;POPA, Vitalie, 1 Uzinelor street, apartment number 6, Bardar, Republic of Moldova ~72: GANTENBRINK, Bruno Alexander;POPA, Vitalie~ 33:EP ~31:24174365.7 ~32:06/05/2024

2026/10789 ~ Complete ~54:MODULATION AND CODING SCHEME INDICATION METHOD AND CORRESPONDING APPARATUS ~71:HUAWEI TECHNOLOGIES CO., LTD., Huawei Administration Building, Bantian, People's Republic of China ~72: GAN, Ming;GONG, Bo;YU, Jian~ 33:CN ~31:202410710045.1 ~32:31/05/2024

2026/10790 ~ Provisional ~54:GUBEVU SOLAR TRACTOR ~71:PETRUS STORM MADUNA, 1570 MAMAFUBEDU PETRUS STEYN, South Africa ~72: PETRUS STORM MADUNA~

2026/10791 ~ Provisional ~54:30 TONS SLIDING GRAIN TRAILER ~71:PETRUS STORM MADUNA, 1570 MAMAFUBEDU PETRUS STEYN, South Africa ~72: PETRUS STORM MADUNA~

2026/10760 ~ Complete ~54:SPP-NP LOADED WITH H-EXO COMPOSITE SYSTEM AND PREPARATION METHOD AND USE THEREOF ~71:NORTH CHINA UNIVERSITY OF SCIENCE AND TECHNOLOGY, No. 21 Bohai Avenue, Caofeidian District, Tangshan City, Hebei Province, 063000, People's Republic of China ~72: HU Huiju;SUN Hong~

2026/10763 ~ Complete ~54:VIDEO DECODING METHOD AND APPARATUS FOR OBTAINING QUANTIZATION PARAMETER, AND VIDEO ENCODING METHOD AND APPARATUS FOR TRANSMITTING QUANTIZATION PARAMETER ~71:SAMSUNG ELECTRONICS CO., LTD., 129, Samsung-ro, Yeongtong-gu, SUWON-SI 16677, GYEONGGI-DO, REPUBLIC OF KOREA, Republic of Korea ~72: CHOI, Kiho;KIM, Chanyul;PARK, Minsoo;PARK, Minwoo;PIAO, Yinji;SOHN, Yumi~ 33:US ~31:62/959,452 ~32:10/01/2020

2026/10766 ~ Complete ~54:ENCODING METHOD, DECODING METHOD, CODE STREAM, ENCODER, DECODER AND STORAGE MEDIUM ~71:GUANGDONG OPPO MOBILE TELECOMMUNICATIONS CORP., LTD., No.18 Haibin Road Wusha Chang'an, Dongguan, Guangdong, People's Republic of China ~72: HUO, Junyan;LI, Ming;MA, Yanzhuo;QIAO, Wenhan;QIU, Nengfu;YANG, Fuzheng~

2026/10768 ~ Complete ~54:INTELLIGENT OPERATION CONTROL ANALYSIS METHOD FOR THE WHOLE PROCESS OF MARKETING PUBLIC SERVICES ~71:Marketing Service Center OF State Grid Gansu Electric Power Company, No. 8, North Binhe Road, Chengguan District, Lanzhou City, Gansu Province, 730030, People's Republic of China ~72: CAO Huafeng;DONG Haonan;DU Songling;HU Hongxia;LI Hu;LI Xiaoming;TAI Shujie;WANG Kun;WANG Xiaojun;XIN Lingling;YANG Xiaojun;YANG Zhengtao;ZHAO Minyu~

2026/10778 ~ Complete ~54:AN ANALGESIC PUMP ~71:Xiangya Hospital Of Central South University, No. 87, Xiangya Road, Changsha, Hunan 411100, People's Republic of China ~72: DENG, Shan;GAO, Shuguang;GUO, Yabin;LI, Kailin;LI, Yanlan;LI, Yusheng;LIU, Fei;LIU, Yupeng;PENG, Deyan;PENG, Fangmin;PENG, Shan;QU, Jin;SONG, Zongbin;WANG, Chenggong;XIONG, Yilin;ZENG, Biyun;ZHANG, Yiwang;ZHAO, Shushan;ZHOU, Yang~

2026/10788 ~ Complete ~54:ANTENNA UNIT, ANTENNA, AND COMMUNICATION DEVICE ~71:HUAWEI TECHNOLOGIES CO., LTD., Huawei Administration Building, Bantian, People's Republic of China ~72: HUANG, Dan;LI, Mingyang;LIANG, Zhipeng;LIU, Chuan;ZHAO, Shuchen~ 33:CN ~31:202410610195.5 ~32:16/05/2024

2026/10776 ~ Complete ~54:COUPLED MULTIPLE-UNIT TRAIN SET AND WIRELESS COMMUNICATION SYSTEM THEREOF ~71:CRRC ZHUZHOU ELECTRIC LOCOMOTIVE RESEARCH INSTITUTE CO., LTD., No.169 Shidai Road, Shifeng District, People's Republic of China ~72: CHEN, Taifu;FENG, Dong;FENG, Ye;HAN, Chen;HAO, Bo;LENG, Jing;LIN, Lei;LIU, Yizhou;YANG, Weifeng;YANG, Zejing;YU, Wanneng;ZHOU, Xuexun~ 33:CN ~31:202411372160.9 ~32:29/09/2024

2026/10785 ~ Complete ~54:AGENTS THAT BIND TO CD3 AND CD19, NUCLEIC ACIDS ENCODING THE SAME AND USES THEREOF ~71:ABOGEN LIFE SCIENCES (SHANGHAI) CO., LTD., No. 1688, Jinshi Road Baoshan District, Shanghai 200949, People's Republic of China ~72: DU, Liang;GAO, Peng;YIN, Wei;YING, Bo;YUAN, Jijun;ZHONG, Xia~ 33:CN ~31:PCT/CN2024/086753 ~32:09/04/2024;33:CN ~31:PCT/CN2024/100327 ~32:20/06/2024

2026/10780 ~ Complete ~54:ENCODING AND DECODING THE OCTREE INFORMATION ~71:KONINKLIJKE PHILIPS N.V., High Tech Campus 34, EINDHOVEN 5656 AE, THE NETHERLANDS, Netherlands ~72: LASSERRE, Sébastien;TAQUET, Jonathan Gaël Yoann~ 33:US ~31:63/631,670 ~32:09/04/2024

2026/10781 ~ Complete ~54:POLYPEPTIDE COMPRISING A CAPSID PROTEIN SEQUENCE ~71:A-SPECTAR GMBH, Stiftsweg 28, KORNEUBURG 2100, AUSTRIA, Austria ~72: DU PLESSIS, Lana;SCHÖNFELD, Wolfgang~ 33:EP ~31:24174890.4 ~32:08/05/2024

2026/10787 ~ Complete ~54:FOLDING CONTAINER WITH A CIRCUMFERENTIAL BASE EDGE ~71:SCHOELLER ALLIBERT GMBH, Sacktannen 1, Germany ~72: BERLING, Michael;KELLERER, Richard~ 33:EP ~31:24171626.5 ~32:22/04/2024

2026/10749 ~ Provisional ~54:A HYPOCHOLESTEROLAEMIC HARD CHEESE PRODUCT AND A PROCESS FOR MANUFACTURING SAME UTILISING REGIOSPECIFIC HIGH-STEARIC HIGH-OLEIC VEGETABLE LIPID EMULSIONS ~71:Jacobus Pieter Strydom, 94 Bernard Rd, South Africa ~72: Jacobus Pieter Strydom~

2026/10751 ~ Provisional ~54:ROCK BOLT ASSEMBLY ~71:MPUMATECH MINING PTY LTD., 35 - 43 Noble Road, Ferrobank, Mpumalanga Province, South Africa ~72: CLARK, Raymond Jurgens;RADEMEYER, Clinton Jan;THAPEDI, Lucky Sillo~

2026/10752 ~ Provisional ~54:ABSTEMIA FITNESS APPARATUS ~71:Mpuse Joseph Ndlovu, 575 Netsianda Street, South Africa ~72: Mpuse Joseph Ndlovu~

2026/10754 ~ Provisional ~54:HIERARCHICAL EDGE-AI AND DUAL-TIMESCALE LIVESTOCK INTELLIGENCE SYSTEM AND METHOD ~71:QualiKeeper Investments Limited, 6054, Sibweni Road, Northmead, LUSAKA, ZAMBIA, Zambia ~72: CHILESHE, Elijah;KATANEKWA, Nicholas~

2026/10758 ~ Provisional ~54:SENGCA ENGINE ~71:Nathi Sengca, 5831 Winnie Mandela street, South Africa ~72: Nathi Sengca~ 33:ZA ~31:01 ~32:01/01/2025

2026/10759 ~ Complete ~54:A METHOD FOR ESTIMATING THE TEMPERATURE OF MASS CONCRETE IN WINTER ~71:HEBEI WATER CONSERVANCY ENGINEERING BUREAU GROUP LIMITED, No. 103, Jianshe South Street, Shijiazhuang, Hebei, People's Republic of China;Hebei University of Water Resources and Electric Engineering, No. 49, Huanghe West Road, Cangzhou, Hebei, People's Republic of China ~72: CHEN, Jing;HAN, Rongsheng;JIA, Yue;LI, Haimin;LI, Pengcheng;LIANG, Songshan;LIU, Yanmin;SU, Yongjun;ZHANG, Jie~ 33:CN ~31:202512032429X ~32:30/12/2025

2026/10761 ~ Complete ~54:METHOD FOR HALF-BRANCH CUTTING PROPAGATION OF TECTONA GRANDIS ~71:EXPERIMENTAL CENTER OF TROPICAL FORESTRY CHINESE ACADEMY OF FORESTRY, No. 201, Keyuan Road, Pingxiang City, Chongzuo City, Guangxi Province, 532600, People's Republic of China ~72: CHEN Dongcheng;JIANG Zhilin;LI Yunxing;LIU Heng;LIU Shiling;TANG Jixin;WU Junduo;XI Yingzhuo;YANG Baoguo;ZHANG Pei~

2026/10762 ~ Complete ~54:VIDEO DECODING METHOD AND APPARATUS FOR OBTAINING QUANTIZATION PARAMETER, AND VIDEO ENCODING METHOD AND APPARATUS FOR TRANSMITTING QUANTIZATION PARAMETER ~71:SAMSUNG ELECTRONICS CO., LTD., 129, Samsung-ro, Yeongtong-gu, SUWON-SI 16677, GYEONGGI-DO, REPUBLIC OF KOREA, Republic of Korea ~72: CHOI, Kiho;KIM, Chanyul;PARK, Minsoo;PARK, Minwoo;PIAO, Yinji;SOHN, Yumi~ 33:US ~31:62/959,452 ~32:10/01/2020

2026/10765 ~ Complete ~54:VIDEO DECODING METHOD AND APPARATUS FOR OBTAINING QUANTIZATION PARAMETER, AND VIDEO ENCODING METHOD AND APPARATUS FOR TRANSMITTING QUANTIZATION PARAMETER ~71:SAMSUNG ELECTRONICS CO., LTD., 129, Samsung-ro, Yeongtong-gu, SUWON-SI 16677, GYEONGGI-DO, REPUBLIC OF KOREA, Republic of Korea ~72: CHOI, Kiho;KIM, Chanyul;PARK, Minsoo;PARK, Minwoo;PIAO, Yinji;SOHN, Yumi~ 33:US ~31:62/959,452 ~32:10/01/2020

2026/10770 ~ Complete ~54:INTELLIGENT SUPERVISION AND RISK DIAGNOSIS METHOD FOR SAMPLE TAKING AND SEALING WITH MULTIMODAL DATA FUSION ~71:Gansu Tongxing Intelligent Technology Development Co.,Ltd, No. 575, Zhangsutan, Lanzhou City, Gansu Province, People's Republic of China ~72: CHEN Yuanyuan;LI Kai;Ma Zhiqiang;Rexiati Adili;SHAO Chunjie~

2026/10771 ~ Complete ~54:SYSTEM AND METHOD FOR AUTONOMOUS AI- DRIVEN EXCEPTION DETECTION RESOLUTION AND OPERATIONAL OPTIMIZATION IN WAREHOUSES ~71:Jaya Surya Teja Gaddam, 13320 Conductor Cir Apt -217, Louisville, KY 40243, United States of America;Mohan Krishna Oorugonda, 215 N Moore Rd, Apt 8009, Coppell, Texas, 75019, United States of America;Sai Rohit Jonnada, 301 Palazzo Cir Apt 304, Louisville, KY, 40222, United States of America ~72: Jaya Surya Teja Gaddam;Mohan Krishna Oorugonda;Sai Rohit Jonnada~

2026/10774 ~ Complete ~54:SLURRY PROCESSING APPARATUS AND SLURRY STREAM PROCESSING EQUIPMENT AS WELL AS A FLOTATION CELL UNIT RELATED THERETO ~71:METSO FINLAND OY, Rauhalanpuisto 9, Finland ~72: SARLUND, Eeli Herman~ 33:EP ~31:24185079.1 ~32:27/06/2024

2026/10779 ~ Complete ~54:REFERENCE PICTURE DERIVATION IN VIDEO CODING ~71:QUALCOMM INCORPORATED, ATTN: International IP Administration, 5775 Morehouse Drive, SAN DIEGO 92121-1714, CA, USA, United States of America ~72: CHEN, Chun-Chi;HUANG, Han;KARCZEWICZ, Marta;LIN, Jian-Liang;SEREGIN, Vadim;ZHANG, Zhi~ 33:US ~31:63/631,718 ~32:09/04/2024;33:US ~31:19/173,197 ~32:08/04/2025

2026/10782 ~ Complete ~54:ADJUSTABLE ROTATING DRUM FOR FORMING A BEAD OF A TYRE ~71:BRIDGESTONE EUROPE NV/SA, Da Vincilaan, 1, ZAVENTEM 1930, BELGIUM, Belgium ~72: BARBATI, Oreste~ 33:IT ~31:102024000010333 ~32:08/05/2024

2026/10783 ~ Complete ~54:METHOD FOR PRODUCING LONG-ACTING EPO-FC FUSION PROTEIN ~71:GENEXINE, INC., 172, Magokjungang-ro, Gangseo-gu, Republic of Korea;PT KALBE GENEXINE BIOLOGICS, Jalan Jenderal Soeprapto Kav. 4 Nomor 1, RT 013, RW 007, Kelurahan Cempaka, Indonesia ~72: GWON, Gwang Hyeon;HERYANTO, Aditya Fendy;HONG, Sung Kap;JUNG, Sun Young;KIM, Kyu Don;LEE, Sung Hee;SIE, Djohan;SUNG, Young Chul~ 33:ID ~31:P00202403439 ~32:19/04/2024

2026/10750 ~ Provisional ~54:A LEVELLING FOOT FOR A TUBULAR FURNITURE MEMBER, AND FURNITURE INCLUDING IT ~71:JACOBS JOINERY & SHOPFITTERS (PTY) LTD, 80 Pentrich Road, Pentrich, South Africa ~72: MATTHEW BRODIE WILSON~

2026/10753 ~ Provisional ~54:PRODUCTION OF COMPOSITIONS COMPRISING CANNABINOIDS, TERPENES, AND/OR CANNABIMIMETIC COMPOUNDS EXHIBITING ENHANCED PHYTOPHARMACOKINETIC AND PHYTOCHEMICAL SYNERGISTIC PROPERTIES. ~71:Herbal Research and Development Centre (Pty) Ltd, 15 TipTol Street, South Africa ~72: Gertruida Elizabeth De Jong~

2026/10764 ~ Complete ~54:VIDEO DECODING METHOD AND APPARATUS FOR OBTAINING QUANTIZATION PARAMETER, AND VIDEO ENCODING METHOD AND APPARATUS FOR TRANSMITTING QUANTIZATION PARAMETER ~71:SAMSUNG ELECTRONICS CO., LTD., 129, Samsung-ro, Yeongtong-gu, SUWON-SI 16677, GYEONGGI-DO, REPUBLIC OF KOREA, Republic of Korea ~72: CHOI, Kiho;KIM, Chanyul;PARK, Minsoo;PARK, Minwoo;PIAO, Yinji;SOHN, Yumi~ 33:US ~31:62/959,452 ~32:10/01/2020

2026/10769 ~ Complete ~54:METHOD FOR INTELLIGENT AUDITING OF PROJECT COMPLETION FINAL ACCOUNTS BASED ON THREE-DIMENSIONAL RECONSTRUCTION ~71:Gansu Tongxing Intelligent Technology Development Co.,Ltd, No. 575, Zhangsutan, Lanzhou City, Gansu Province, People's Republic of China ~72: LI Kai;MA Yunjun;Rexiati Adili;SHAO Chunjie;ZHOU Shuo~

2026/10748 ~ Provisional ~54:METHOD AND SYSTEM FOR GRAPH-ENFORCED GOVERNANCE OF AUTOMATED AGENTS WITH ERASURE-COMPATIBLE, INDEPENDENTLY VERIFIABLE EVIDENCE COMMITMENTS ~71:John Kevin Wellard, 125 Benoni Road, Rynfield AH, South Africa ~72: John Kevin Wellard~

2026/10756 ~ Provisional ~54:PROTECTIVE GARMENT ~71:No Smudge Just Glam (Pty) Ltd, 102 Phoenix Crescent, Kraaifontein, South Africa ~72: MINNAAR, Deborah Margaret~

2026/10773 ~ Complete ~54:USE OF CIPROFOL INJECTION FOR SURGICAL GENERAL ANESTHESIA INDUCTION AND MAINTENANCE IN PEDIATRIC PATIENT ~71:XIZANG HAISCO PHARMACEUTICAL CO., LTD., No.43, Wenxiong Avenue, Naidong District, People's Republic of China ~72: CAO, Yong;CHEN,

Junxia;FENG, Qingwei;LIN, Hongjun;LIU, Xiao;XU, Keping;YAN, Pangke~ 33:CN ~31:202410505131.9 ~32:22/04/2024;33:CN ~31:202510178143.X ~32:18/02/2025

2026/10777 ~ Complete ~54:HOT-ROLLED FLAT STEEL PRODUCT AND METHOD FOR PRODUCING A FLAT STEEL PRODUCT OF THIS TYPE ~71:SALZGITTER FLACHSTAHL GMBH, Eisenhüttenstraße 99, Germany ~72: DENKS, Dr. Ingwer;WITTE, Dr. Marco~ 33:DE ~31:10 2024 111 068.6 ~32:19/04/2024

2026/10757 ~ Provisional ~54:PROTECTIVE GARMENT ~71:No Smudge Just Glam (Pty) Ltd, 102 Phoenix Crescent, Kraaifontein, South Africa ~72: MINNAAR, Deborah Margaret~

2026/10767 ~ Complete ~54:INTELLIGENT OPERATION MONITORING AND RISK IDENTIFICATION METHOD FOR ACCOUNTING AND EXPENSE-CONTROL BUSINESS ~71:Marketing Service Center OF State Grid Gansu Electric Power Company, No. 8, North Binhe Road, Chengguan District, Lanzhou City, Gansu Province, 730030, People's Republic of China ~72: CAO Huafeng;DING Ruihua;DONG Jinliang;LI Hu;LIU Jingzhong;MENG Qianrong;TAI Shujie;WANG Xiaojun;WEI Kai;WU Ying;YANG Xiaojun;YANG Zhengtao;ZHANG Xiaoqing;ZHAO Minyu~

2026/10772 ~ Complete ~54:MACROCYCLIC PANRAS INHIBITORS FOR THE TREATMENT OF CANCER ~71:NOVARTIS AG, Lichtstrasse 35, Switzerland ~72: CHEN, Zhuoliang;CHIANG, Yingling;CONNORS, William Francis;FUREGATI, Markus Reto;GAO, Xin;GULLEDGE, Zachary Zephenia;HINDS, Aaron Bret;KAWANAMI, Toshio;LAFRANCE, Marc;MCNEILL, Eric Andrew;MOEBITZ, Henrik;NAKAJIMA, Katsumasa;SCHWALEN, Christopher Joseph;SHEN, Yiping;THOMAS, Ranny Mathew;WZOREK JR, Joseph S.;ZECRI, Frédéric Jean;ZHANG, Qiang~ 33:US ~31:63/632,181 ~32:10/04/2024;33:US ~31:63/698,688 ~32:25/09/2024

2026/10795 ~ Provisional ~54:SOIL SENSE ~71:Mbalentle Khalakahla, 23 inner crescent westpark, South Africa;Mbalentle khalakahla, 23 inner crescent westpark, South Africa ~72: Mbalentle khalakahla;Mbalentle khalakahla~

2026/10792 ~ Provisional ~54:SANIT TRAY ~71:TSHEGOFATSO ROSINA KOLOBE, 1419 PELOTONA STREET, PROTEA NORTH, SOWETO,, South Africa ~72: TSHEGOFATSO ROSINA KOLOBE~

2026/10793 ~ Provisional ~54:REUSABLE CARBOARD CONTAINER FOR RETAINING A PAPER SHOPPING BAG AS A WASTE RECEPTACLE LINER ~71:CARL,FREDERICK,WILHELM ,SUPRA, 9 MELROSE GARDENS, 17 NORTH STREET ILLOVO, South Africa ~72: CARL,FREDERICK, WILHELM ,SUPRA~

2026/10786 ~ Complete ~54:ENCODING METHOD, DECODING METHOD, ENCODER, DECODER, AND STORAGE MEDIUM ~71:GUANGDONG OPPO MOBILE TELECOMMUNICATIONS CORP., LTD., No. 18, Haibin Road, Wusha, Chang'an, Dongguan, Guangdong 523860, People's Republic of China ~72: XU, Luhang~

2026/10794 ~ Provisional ~54:"3IN1 FOOD SERVER TROLLEY ~71:LEBUSO ERNEST JOB MASEMOLA, BLOCK F UNIT 106 FLEURHOF LIFESTYLE ESTATE, South Africa ~72: LEBUSO ERNEST JOB MASEMOLA~

2026/10784 ~ Complete ~54:ANTI-GDF-15 ANTIBODY AND USE THEREOF ~71:GENFLEET THERAPEUTICS (SHANGHAI) INC., Level 2/3/4/5, Suite 8, 1206 Zhangjiang Road, People's Republic of China ~72: HE, Xiangyu;JIN, Lei;LAN, Jiong;LI, Yumei;LU, Qiang;ZHOU, Fusheng;ZHU, Seng~ 33:CN ~31:202410497848.3 ~32:23/04/2024;33:CN ~31:202510488103.5 ~32:17/04/2025

2026/11118 ~ Provisional ~54:A MOBILE BULK FOOD WASHING AND DRAINAGE APPARATUS WITH MODULAR FLAT-PACK FRAME (CWENGA) ~71:Nondabenhle Mdluli, 36 Bell Tower Road, Nagina Pinetown, South Africa;Nondabenhle Mdluli, 36 Bell Tower Road, Nagina Pinetown, South Africa ~72: Nondabenhle Mdluli~

. - APPLIED ON 2026/11/09 -

2026/10797 ~ Provisional ~54:SUPERTANK ~71:DIETMAR ALBERT PAHL, 30 COLLINGWOOD STREET, KENSINGTON, South Africa ~72: DIETMAR ALBERT PAHL~

2026/10805 ~ Provisional ~54:DOWNLINE WIRE, DETONATION SYSTEM AND METHOD OF LOADING A BLAST HOLE ~71:QUANTUMX (PTY) LTD, 1002 Ergon Road, Lyttelton, Centurion, South Africa ~72: SILVIS, Jacques~

2026/10810 ~ Provisional ~54:ACCESSIMARK AFRICA ~71:ACCESSIMARK AFRICA, HOUSE 5500 STRUGEN ROAD HELERFONTEIN PHASE 3, South Africa ~72: ACCESSIMARK AFRICA~

2026/10835 ~ Complete ~54:A METHOD OF CONTROLLING A CHEMICAL PROCESS ~71:JOHNSON MATTHEY DAVY TECHNOLOGIES LIMITED, 5th Floor, 2 Gresham Street, London EC2V 7AD, United Kingdom ~72: CHALMERS, Alexander James;EMERSON, Joseph Thomas;FLEMING, Liam Richard;STITT, Edmund Hugh~ 33:GB ~31:2308529.3 ~32:08/06/2023

2026/10859 ~ Provisional ~54:FEMEASE ~71:BABALWA MAVUMENGWANA, 19 AMAZONSTONE, South Africa ~72: FEMEASE~

2026/10848 ~ Complete ~54:PHARMACEUTICAL COMPOSITIONS COMPRISING ASUNDEXIAN AND USE THEREOF ~71:DR. REDDY'S LABORATORIES LIMITED, House No. 8-2-337, Street Road No.3, Banjara Hills, City Hyderabad, State Telangana, India ~72: ARORA, Sachin;BHATTACHARYA, Saswati;HANDA, Ajay Kumar;JHA, Romesh;KADAM, Sainath Digambar~ 33:IN ~31:202441031172 ~32:18/04/2024

2026/10799 ~ Provisional ~54:SYSTEM AND METHOD FOR POLICY-ENFORCED THRESHOLD-QUORUM ATTESTATION WITH OFFLINE DEFERRED RECONFIRMATION IN A FEDERATED MULTI-PARTY VERIFICATION PLATFORM ~71:Leonard Badi, 18 Rhodes Street, Goodwood Estates, South Africa ~72: Leonard Badi~ 33:ZA ~31:2026/08317 ~32:19/08/2026

2026/10803 ~ Provisional ~54:HAND-HELD CANNULA PLACEMENT INSTRUMENT AND CANNULA CARTRIDGES THEREFOR ~71:BRADLEY KYLE DUNCAN, 18 MORGENSTER CRESCENT, South Africa ~72: BRADLEY KYLE DUNCAN~

2026/10816 ~ Provisional ~54:NESTABLE BEVERAGE CAN CARRIERS AND TRANSPORT PACKAGING SYSTEM ~71:Martin Hempel, 4 Ibiswood, 30 Dana Street, South Africa ~72: Martin Hempel~

2026/10821 ~ Complete ~54:BATTERY MODULE WITH INTERCELL SEPARATING ELEMENTS AND A GAS VENTING MANIFOLD ~71:Zhumatiy Alexander Sergeevich, Tagilskaya St., 4, apt. 765, Moscow, 107143, Russian Federation ~72: Zhumatiy Alexander Sergeevich~ 33:RU ~31:2026125745 ~32:21/08/2026

2026/10826 ~ Complete ~54:REMOVABLE SANITARY-SEALED CONTAMINANT CASSETTE FOR A DISHWASHER ~71:Zhumatiy Alexander Sergeevich, Tagilskaya St., 4, apt. 765, Moscow, 107143, Russian Federation ~72: Zhumatiy Alexander Sergeevich~ 33:RU ~31:2026125699 ~32:21/08/2026

2026/10828 ~ Complete ~54:INTERCELL SEPARATING ELEMENT OF A BATTERY MODULE ~71:Zhumatiy Alexander Sergeevich, Tagilskaya St., 4, apt. 765, Moscow, 107143, Russian Federation ~72: Zhumatiy Alexander Sergeevich~ 33:RU ~31:2026125736 ~32:21/08/2026

2026/10849 ~ Complete ~54:FIBER-BOUND POLYPHENOL COMPOSITIONS AND METHODS ~71:VDF FUTURECEUTICALS, INC., 2692 N. State Rt. 1-17, United States of America ~72: KESLER, Brendan J.~ 33:US ~31:63/648,074 ~32:15/05/2024

2026/10853 ~ Complete ~54:ENGINEERING CASSAVA FOR IMPROVED GROWTH AND YIELD ~71:ETH ZÜRICH, Rämistrasse 101/ ETH Transfer, 8092, Zürich, Switzerland;FRIEDRICH-ALEXANDER-UNIVERSITÄT ERLANGEN-NÜRNBERG, IN VERTRETUNG DES FREISTAATES BAYERN, Freyeslebenstrasse 1, 91058, Erlangen, Germany;NATIONAL CHUNG HSING UNIVERSITY, Biotechnology Center, 145 Xingda Road, Taichung City, Province of China, 40227, Taiwan, Province of China;UNIVERSITY OF KAISERSLAUTERN-LANDAU, Gottlieb-Daimler-Strasse, 67663, Kaiserslautern, Germany ~72: BELLIN, Leo;GRUISSEM, Wilhelm;NEUHAUS, Ekkehard;SONNEWALD, Uwe;ZIERER, Wolfgang~ 33:US ~31:63/651,899 ~32:24/05/2024

2026/10798 ~ Provisional ~54:SYSTEM AND METHOD FOR FEDERATED BIOMETRIC LAND SEALING WITH AUTOMATED STATE MANAGEMENT, CERTIFICATION, AND SUCCESSION FOR NATIONAL LAND REGISTRIE ~71:Leonard Badi, 18 Rhodes Street, Goodwood Estates, South Africa ~72: Leonard Badi~

2026/10806 ~ Provisional ~54:SYSTEM AND METHOD FOR SOVEREIGN DEVICE ATTESTATION WITH FEDERATED THRESHOLD SIGNATURE SEALING, MULTI-PILLAR WITNESS VERIFICATION, AND PAIRWISE IDENTITY DERIVATION ~71:Leonard Badi, 18 Rhodes Street, Goodwood Estates, South Africa ~72: Leonard Badi~

2026/10815 ~ Provisional ~54:A DECENTRALIZED MULTI-TENANT TRANSACTION COMPLIANCE NETWORK LAYER RUNNING ON DISTRIBUTED DATABASE STORAGE SHARDS WITH AUTOMATED REGULATORY SWITCHES, OPEN-BANKING CLEARING MODULES, AND CRYPTOGRAPHIC HARDWARE INTERLOCKS ~71:Rajiv Girhawu, 4 Vlok Road, South Africa ~72: Rajiv Girhawu~

2026/10825 ~ Complete ~54:VEHICLE WHEEL DISC WITH SELF-CLEANING OF THE INNER CAVITY FROM SNOW ~71:Zhumatiy Alexander Sergeevich, Tagilskaya St., 4, apt. 765, Moscow, 107143, Russian Federation ~72: Zhumatiy Alexander Sergeevich~ 33:RU ~31:2026125762 ~32:21/08/2026

2026/10827 ~ Complete ~54:BATTERY MODULE WITH A DEPLOYABLE THERMAL PROTECTION SCREEN ~71:Zhumatiy Alexander Sergeevich, Tagilskaya St., 4, apt. 765, Moscow, 107143, Russian Federation ~72: Zhumatiy Alexander Sergeevich~ 33:RU ~31:2026125714 ~32:21/08/2026

2026/10831 ~ Complete ~54:A CLINICAL RISK GRADING ASSESSMENT SYSTEM AND METHOD FOR CRITICALLY ILL PATIENTS BASED ON ARTIFICIAL INTELLIGENCE ~71:The First Affiliated Hospital of Guangxi Medical University, No.6 Shuangyong Road, Qingxiu District, Nanning, Guangxi, 530021, People's Republic of China ~72: Huang Ming;Lin Songfei;Mo Cuiye~

2026/10851 ~ Complete ~54:IMPROVED WOUND DRESSING AND METHOD TO PREPARE IT ~71:RESCURE GMBH, Lessingstr. 1, 02625, Bautzen, Germany ~72: ATALLAH, Passant;FREUDENBERG, Uwe;KÜHN, Sebastian;SCHIRMER, Lucas;WERNER, Carsten~ 33:EP ~31:24222210.7 ~32:20/12/2024

2026/10857 ~ Complete ~54:NON-ISCHEMIC BEATING HEART XENOTRANSPLANTATION ~71:THE TRUSTEES OF COLUMBIA UNIVERSITY IN THE CITY OF NEW YORK, 412 Low Memorial Library 535 W 116th Street New York, New York, 10027, United States of America ~72: BREWER, Michael;GOLDSTONE, Andrew B;WOLBROM, Daniel H~ 33:US ~31:63/654,727 ~32:31/05/2024

2026/10860 ~ Provisional ~54:TODDLER POOL SAFE ~71:JOHAN STRYDOM, 1151 BEN SWART, South Africa ~72: FRANCOIS HAMMAN~

2026/10861 ~ Provisional ~54:A COMPUTER-IMPLEMENTED SYSTEM AND METHOD FOR COORDINATING MULTI-TIERED TRANSACTIONAL ACCOUNT MICROSERVICES IN AN INFORMAL DIGITAL FINANCIAL ECOSYSTEM ~71:Malleable Enterprise (Pty) Ltd, 7494 Protea BoulevardProtea Glen ext 11, South Africa ~72: Kanya Cyril Ntlabati~

2026/10807 ~ Provisional ~54:METHOD, SYSTEM AND DEVICE FOR VERIFYING THE PHYSICAL PRESENCE OF A LIVE HUMAN SPEAKER USING LOW-FREQUENCY TURBULENCE INCOHERENCE BETWEEN TWO CLOSELY SPACED MICROPHONE CAPSULES ~71:Bryan Jones, 93 Witteklip road R334 Uitenhage Farms, South Africa ~72: Bryan Richard Jones~

2026/10813 ~ Provisional ~54:LOADING SYSTEM ~71:PADAYACHEE, Maganathan, 13 Fonslen Grove, Lenham, Phoenix, Durban 4068, SOUTH AFRICA, South Africa ~72: PADAYACHEE, Maganathan~

2026/10814 ~ Provisional ~54:SEDINODE – MULTI-CHANNEL ELECTRICAL ENERGY METERING AND CONTROL APPARATUS ~71:Morongoa Matlala, 72 Major Road, South Africa ~72: Morongoa Matlala~

2026/10818 ~ Complete ~54:ANTI-ICING DEVICE FOR A ROAD SIGN ~71:Zhumatiy Alexander Sergeevich, Tagilskaya St., 4, apt. 765, Moscow, 107143, Russian Federation ~72: Zhumatiy Alexander Sergeevich~ 33:RU ~31:2026125620 ~32:20/08/2026

2026/10822 ~ Complete ~54:ANTI-ICING DEVICE FOR AN ELEMENT OF A METEOROLOGICAL MAST ~71:Zhumatiy Alexander Sergeevich, Tagilskaya St., 4, apt. 765, Moscow, 107143, Russian Federation ~72: Zhumatiy Alexander Sergeevich~ 33:RU ~31:2026125613 ~32:20/08/2026

2026/10824 ~ Complete ~54:VEHICLE CHARGING PORT ASSEMBLY WITH PASSIVE FREEZE PROTECTION ~71:Zhumatiy Alexander Sergeevich, Tagilskaya St., 4, apt. 765, Moscow, Moscow, 107143, Russian Federation ~72: Zhumatiy Alexander Sergeevich~ 33:RU ~31:2026125733 ~32:21/08/2026

2026/10830 ~ Complete ~54:TRANSACTION FACILITATION SYSTEM AND METHOD ~71:MOTALA, Nazeefah, FAIRVIEW ON 14TH, UNIT 44, JOHANNESBURG, 2030, SOUTH AFRICA, South Africa ~72: MOTALA, Nazeefah~ 33:ZA ~31:2026/06498 ~32:22/06/2026

2026/10837 ~ Complete ~54:DIE FOR HYDROFORMING OF TUBULAR PARTS AND PROCESSING METHOD THEREOF ~71:TANGSHAN UNIVERSITY, No. 9, Daxue West Road, Lubei District, Tangshan, People's Republic of China ~72: LIU, Chao;WU, Na~ 33:CN ~31:202611477238.2 ~32:22/09/2026

2026/10846 ~ Complete ~54:MAXI-K POTASSIUM CHANNEL OPENERS AND THERAPEUTIC APPLICATIONS THEREOF ~71:LES LABORATOIRES SERVIER, 35, rue de Verdun, SURESNES CEDEX 92284, FRANCE, France ~72: CEUSTERS, Marc;RING, Robert H.~ 33:EP ~31:24175310.2 ~32:10/05/2024

2026/10850 ~ Complete ~54:HYDROGELS FOR TREATING INFLAMMATORY BOWEL DISEASES ~71:RESCURE GMBH, Lessingstraße 1 02625 Bautzen, Germany ~72: FREUDENBERG, Uwe;HAMPE, Jochen;KÜHN, Sebastian;PEUKER, Kenneth;SCHIRMER, Lucas;WERNER, Carsten;ZEISSIG, Sebastian~ 33:DE ~31:10 2024 115 049.1 ~32:29/05/2024

2026/10852 ~ Complete ~54:DOSING REGIMENS OF ANTI-CD38 ANTIBODIES FOR TREATMENT OF SUBJECTS WITH IMMUNOGLOBULIN A NEPHROPATHY ~71:TAKEDA PHARMACEUTICAL COMPANY LIMITED, 1-1, Doshomachi 4-Chome Chuo-ku Osaka-shi, Osaka, 541-0045, Japan ~72: FEDYK, Eric;HOMSY, Jason~ 33:US ~31:63/644,913 ~32:09/05/2024;33:US ~31:63/694,484 ~32:13/09/2024;33:US ~31:63/751,190 ~32:29/01/2025

2026/10844 ~ Complete ~54:TREATMENT AGENT FOR DISEASE CAUSED BY INTERVERTEBRAL DISK DEGENERATION ~71:CUREDISC CORPORATION, CINOVA YAMANASHI 3F,, 517 Kawadamachi, KOFU-SHI 4000811, YAMANASHI, JAPAN, Japan ~72: HARO, Hirotaka~ 33:JP ~31:2024-080317 ~32:16/05/2024;33:JP ~31:2024-164759 ~32:24/09/2024

2026/10802 ~ Provisional ~54:CANNULA SEATED AT A CRANIAL FORAMEN FOR PERFUSION OF THE BRAIN ~71:BRADLEY KYLE DUNCAN, 18 MORGENSTER CRESCENT, South Africa ~72: BRADLEY KYLE DUNCAN~

2026/10809 ~ Provisional ~54:METHOD AND SYSTEM FOR UNSUPERVISED DETECTION OF ANOMALOUS TRANSACTIONS BY PAIRWISE RELATIONAL PARTITIONING AND SUPERVISED-CLASSIFIER COMBINATION ~71:CHRISTIAAN WILHELM VERMAAK, 897 FLORIN ROAD, 43 DIE KIESELS, WILGEHEUWEL, South Africa;TOFARA MOYO, 3 BURNHAM ROAD, KHUMALO, Zimbabwe ~72: CHRISTIAAN WILHELM VERMAAK;TOFARA MOYO~

2026/10812 ~ Provisional ~54:UNIVERSAL VEHICLE SECURITY ARCHITECTURE WITH COURT-ORDER GATED RECOVERY, FINANCIAL RISK MITIGATION, BORROWER/LENDING MODE WITH SAFE GUARD, AND PRIVACY-PRESERVING GPS CONTROL ~71:ELS SOLUTIONS (PTY) LTD REGISTRATION NUMBER 2025/324339/07, 57 MOKGAPA STREET, FLORA PARK, South Africa ~72: SAMUEL HLEKANI MAKHUBELE~

2026/10832 ~ Complete ~54:ANTI-ICING DEVICE FOR OVERHEAD CONTACT LINE FITTINGS ~71:Zhumatiy Alexander Sergeevich, Tagilskaya St., 4, apt. 765, Moscow, 107143, Russian Federation ~72: Zhumatiy Alexander Sergeevich~ 33:RU ~31:2026128402 ~32:17/09/2026

2026/10842 ~ Complete ~54:COMPOUNDS AND METHODS FOR MODULATING APOE EXPRESSION ~71:IONIS PHARMACEUTICALS, INC., 2855 Gazelle Court, Carlsbad, United States of America ~72: FAZIO, Michael;MCCAULEY, Madelyn E.;SETH, Punit, P.;SWAYZE, Eric E;WAN, W. Brad;ZHAO, Hien Thuy~ 33:US ~31:63/648,915 ~32:17/05/2024

2026/10847 ~ Complete ~54:CAPACITY RECOVERY SYSTEM AND METHOD FOR FLOW BATTERY ~71:DALIAN RONGKE POWER GROUP CO., LTD, No. 20-10, Yingchun Street, Dalian Huayuankou Economic Zone, People's Republic of China ~72: HU, Xiaoxue;LIU, Zhining;SONG, Mingming;TANG, Shichao;WANG, Longfei;ZENG, Fanwu~ 33:CN ~31:202511854082.0 ~32:10/12/2025

2026/10817 ~ Provisional ~54:APPARATUS FOR MARKING WRITTEN WORK ON PAPER, AND ASSOCIATED METHOD ~71:Justine Duane Raymond Harold, 30147 Tsoai Street, Batho, South Africa ~72: Justine Duane Raymond Harold~

2026/10833 ~ Complete ~54:BICYCLIC HETEROARYL DERIVATIVES AS ECTONUCLEOTIDE PYROPHOSPHATASE PHOSPHODIESTERASE 1 INHIBITORS ~71:RIBOSCIENCE LLC, 3901 Laguna Avenue, United States of America ~72: HAWLEY, Ronald;KLUMPP, Klaus~ 33:US ~31:62/833,455 ~32:12/04/2019;33:US ~31:62/881,111 ~32:31/07/2019

2026/10838 ~ Complete ~54:INSTRUCTION TO ACCELERATE CRYPTOGRAPHIC PROCESSING ~71:INTERNATIONAL BUSINESS MACHINES CORPORATION, New Orchard Road, Armonk, United States of America ~72: BRADBURY, Jonathan;BUENDGEN, Reinhard;GOMES, Louis;RAO, Rajat;S R, Soujanya~ 33:US ~31:18/749,865 ~32:21/06/2024;33:US ~31:18/749,928 ~32:21/06/2024

2026/10854 ~ Complete ~54:ANTI-TNF-LIKE LIGAND 1A (TL1A) ANTIBODIES ~71:XENCOR, INC., 465 North Halstead Street, Suite 200, Pasadena, California, 91107, United States of America ~72: AVERY, Kendra N;DAVRA, Viralkumar Rameshkumar;DIAZ, Juan;ERNST, James;FABER, Matthew S;HAO, Su-Shin;NGUYEN, Chi;QI, Jing;TRUONG, Thuy B;WIELER, James~ 33:US ~31:63/651,887 ~32:24/05/2024;33:US ~31:63/692,671 ~32:09/09/2024;33:US ~31:63/705,956 ~32:10/10/2024;33:US ~31:63/760,574 ~32:19/02/2025;33:US ~31:63/761,833 ~32:21/02/2025;33:US ~31:63/796,265 ~32:28/04/2025;33:US ~31:63/796,998 ~32:29/04/2025

2026/10804 ~ Provisional ~54:APEX GG EV CHARGER SOLUTION ~71:Apex Global Group (Pty) Ltd, 24 Dover Street, South Africa ~72: Johan Pretorius~

2026/10811 ~ Provisional ~54:COMPUTER-IMPLEMENTED SYSTEM AND METHOD FOR EVIDENCE-DRIVEN ORCHESTRATION AND VERIFICATION OF SEMICONDUCTOR DESIGN FLOWS ~71:SILICONA (Pty) Ltd, 372 H, South Africa ~72: Themba Enock Mpehle~

2026/10823 ~ Complete ~54:SNOW-DISCHARGING INSERT FOR A VEHICLE WHEEL ARCH ~71:Zhumatiy Alexander Sergeevich, Tagilskaya St., 4, apt. 765, Moscow, 107143, Russian Federation ~72: Zhumatiy Alexander Sergeevich~ 33:RU ~31:2026125689 ~32:21/08/2026

2026/10836 ~ Complete ~54:A RENAL DIALYSIS ARM RESTRAINT DEVICE ~71:THE FIRST PEOPLE'S HOSPITAL OF CHANGDE CITY, No. 818, Renmin Road, Changde, Hunan, People's Republic of China ~72: Dan YIN;Wei BIN~ 33:CN ~31:202511972698.8 ~32:25/12/2025

2026/10840 ~ Complete ~54:PHOTO-RECHARGEABLE METAL TELLURIUM OXIDE ALKALI-ION BATTERY ~71:NORTH-WEST UNIVERSITY, 1 Hoffman Street, Joon van Rooy Building, South Africa ~72: KRIEK, Roelof Jacobus~ 33:ZA ~31:2024/04159 ~32:28/05/2024

2026/10843 ~ Complete ~54:METHODS OF TREATING LIGHT CHAIN AMYLOIDOSIS WITH BISPECIFIC BCMA X CD3 ANTIBODIES ~71:REGENERON PHARMACEUTICALS, INC., 777 Old Saw Mill River Road, Tarrytown, United States of America ~72: CHAUDHARI, Umesh~ 33:US ~31:63/646,498 ~32:13/05/2024

2026/10858 ~ Provisional ~54:DERMAL-TECT ~71:TSHEGOFATSO ROSINA KOLOBE, 1419 PELOTONA STREET, PROTEA NORTH, SOWETO,, South Africa ~72: TSHEGOFATSO ROSINA KOLOBE~

2026/10800 ~ Provisional ~54:ADDENDUM 2 TO 2026/10023 - ROAD ROLL SCREEN - MODULAR 3M SECTIONS ~71:Teboho Daniel Monare, E30 Morula street Windsor section Phokeng, South Africa ~72: Teboho Daniel Monare~

2026/10820 ~ Complete ~54:TRAINING DEVICE FOR FORMING CONTROLLED DRUMSTICK RETURN WITH A CAM-BASED MICRO-RELEASE CONTROL ASSEMBLY ~71:Zhumatiy Alexander Sergeevich, Tagilskaya St., 4, apt. 765, Moscow, 107143, Russian Federation ~72: Zhumatiy Alexander Sergeevich~ 33:RU ~31:2026125709 ~32:21/08/2026

2026/10829 ~ Complete ~54:METHOD FOR COORDINATED REGULATION OF WATER-FLOWING FRACTURE ZONE HEIGHT IN WORKING FACES BY ADVANCED FRACTURING AND GROUTING ~71:CHINA UNIVERSITY OF MINING AND TECHNOLOGY, No.1 Daxue Road, Xuzhou, Jiangsu, People's Republic of China;Yongmei Group Co., Ltd. Xinqiao Coal Mine, Mazhuang Village, Xinqiao Township, Yongcheng City, Shangqiu, Henan, People's Republic of China ~72: GUO Yachao;LI Hui;LI Junmeng;LI Ming;LI Yang;MOU Yufeng;QIU Fuwang;QIU Jiaxuan;YUAN Zengwei;YUE Chongyan;ZHANG Xinguo~

2026/10834 ~ Complete ~54:A THRUST LEG ~71:HYDRO POWER EQUIPMENT (PTY) LTD, 19 Precision Street, Kya Sand, Randburg, South Africa ~72: BÜHRMANN, Rudolph;CRONJÉ, Johan Marthinus;THERON, Christo~ 33:ZA ~31:2025/06661 ~32:08/08/2025

2026/10801 ~ Provisional ~54:RECONSTRUCTION AND VERIFICATION OF THE EARLIEST WITNESSED SOURCE ATTRIBUTION OF TEXT THAT HAS TRAVELLED THROUGH A PLURALITY OF SUCCESSIVE COPY-PASTE OPERATIONS AND TRANSFORMATIONS, INCLUDING THROUGH EDITING ENVIRONMENTS THE RECORDING SYSTEM DOES NOT OBSERVE, BY (I) A DURABLE, CONTENT-FREE, HASH-CHAINED SUCCESSIVE-OBSERVATION LEDGER ON-DEVICE; (II) CROSS-DEVICE RECALL OF THAT LEDGER OVER

THE WIRE WITHOUT DISCLOSURE OF COPIED CONTENT; (III) HOP-BRACKETED ATTRIBUTION OF MATERIAL INTRODUCED BETWEEN OBSERVATIONS SUCH THAT AN UNCHANGED SPAN IS ATTRIBUTED TO THE EARLIEST HOP WHOSE FINGERPRINT SET COVERS IT AND A CHANGED SPAN IS BOUNDED BETWEEN THE TWO HOPS ACROSS WHICH THE CHANGE OCCURRED AND NEVER ATTRIBUTED TO THE DESTINATION; (IV) INDEPENDENT SERVER-SIDE RE-VERIFICATION OF THE FINAL OBSERVATION AGAINST THE PASTED TEXT; AND (V) A NATIVE-PLATFORM CLIPBOARD WITNESS MINTING HOPS THAT OCCUR OUTSIDE ANY MONITORED EDITOR, SO THE CHAIN CROSSES THE OPERATING-SYSTEM BOUNDARY. ~71:Phillip Danial Gimmi, 20 Duiker close, South Africa ~72: Phillip Danial Gimmi;Phillip Danial Gimmi~

2026/10808 ~ Provisional ~54:METHOD AND SYSTEM FOR STRUCTURAL REASONING BY INVARIANT-INDEXED CORRESPONDENCE DISCOVERY AND DESCRIPTION-LENGTH-GATED REPRESENTATION CHANGE ~71:CHRISTIAAN WILHELM VERMAAK, 897 FLORIN ROAD, 43 DIE KIESELS, WILGEHEUWEL, South Africa;TOFARA MOYO, 3 BURNHAM ROAD, KHUMALO, Zimbabwe ~72: CHRISTIAAN WILHELM VERMAAK;TOFARA MOYO~

2026/10845 ~ Complete ~54:POSITION AND BLOCK CHARACTERISTICS DEPENDENT MATRIX INTRA PREDICTION FOR VIDEO CODING ~71:QUALCOMM INCORPORATED, ATTN: International IP Administration, 5775 Morehouse Drive, SAN DIEGO 92121-1714, CA, USA, United States of America ~72: EADIE, Samuel James;GARUS, Patrick;KARCZEWICZ, Marta;RAY, Bappaditya;SEREGIN, Vadim;WANG, Hongtao~ 33:US ~31:63/632,421 ~32:10/04/2024;33:US ~31:19/077,476 ~32:12/03/2025

2026/10796 ~ Provisional ~54:A PAYMENT-CONTROLLED RETROFIT RELEASE SYSTEM FOR A COIN-OPERATED GAME TABLE ~71:MARTIN LOURENCE ERASMUS, Plot 17, Melodie AH, South Africa ~72: MARTIN LOURENCE ERASMUS~

2026/10819 ~ Complete ~54:ANTI-ICING DEVICE FOR AN UNMANNED AERIAL VEHICLE ~71:Zhumatiy Alexander Sergeevich, Tagilskaya St., 4, apt. 765, Moscow, 107143, Russian Federation ~72: Zhumatiy Alexander Sergeevich~ 33:RU ~31:2026125625 ~32:20/08/2026

2026/10841 ~ Complete ~54:INTELLIGENT SCREENING SYSTEM AND METHOD FOR ORAL MUCOSAL LESIONS BASED ON MICROSCOPIC IMAGES ~71:THE FIRST PEOPLE’S HOSPITAL OF CHANGDE CITY, No. 818, Renmin Road, Changde, Hunan, People's Republic of China ~72: Jidong WANG;Jingqi XU~

2026/10856 ~ Complete ~54:THYMOLIVER AND METHODS OF CONSTRUCTING THEREOF ~71:THE TRUSTEES OF COLUMBIA UNIVERSITY IN THE CITY OF NEW YORK, 412 Low Memorial Library 535 W 116th Street New York, New York, 10027, United States of America ~72: GUNES, Muhammed Esad;NOWAK, Greg~ 33:US ~31:63/648,893 ~32:17/05/2024

2026/10839 ~ Complete ~54:PROTECTION OF CRYPTOGRAPHIC PARAMETERS USED IN CRYPTOGRAPHIC PROCESSING ~71:INTERNATIONAL BUSINESS MACHINES CORPORATION, New Orchard Road, Armonk, United States of America ~72: BRADBURY, Jonathan;BUENDGEN, Reinhard;GOMES, Louis;RAO, Rajat;URBAN, Volker~ 33:US ~31:18/749,865 ~32:21/06/2024;33:US ~31:18/749,928 ~32:21/06/2024

2026/10855 ~ Complete ~54:ANTI-C5 ANTIBODY FUSED TO FACTOR H FOR USE IN THE TREATMENT OF COMPLEMENT-MEDIATED DISEASES ~71:KIRA PHARMACEUTICALS (US) LLC, 245 Main Street, 12th Floor, Cambridge, Massachusetts, 02142, United States of America ~72: LEE, Richard;MA, Jay;SONG, Wenru;WENG, Qing Yu~ 33:US ~31:63/641,863 ~32:02/05/2024

. - APPLIED ON 2026/11/10 -

2026/10905 ~ Complete ~54:A CONTINUOUS BEHAVIORAL AUTHENTICATION SYSTEM ~71:Vishwakarma Institute of Technology, 666, Upper Market RD, Upper Indira Nagar, Bibwewadi, Pune, Maharashtra, 411037, India;Vishwakarma University, Survey No 2 3, 4, Kondhwa Main Rd, Laxmi Nagar, Betal Nagar, Kondhwa, Pune, Maharashtra, 411048, India ~72: GITE, Yogesh Sudam;HAVINAL, Shreyash Vijayraj;PASALKAR, Siya Savita;SONAR, Aryan Chandrakant;SONAWANE, Aaryan Anil~

2026/10869 ~ Provisional ~54:FINANCIAL TECH ~71:Mercadoo, 25 Falcon Court, Woodlands Estate,, South Africa ~72: Lebohang Mafa~

2026/10879 ~ Complete ~54:AN IOT BASED ENERGY METERING SYSTEM WITH REAL-TIME MONITORING AND TAMPER DETECTION ~71:Vishwakarma Institute of Technology, 666, Upper Market RD, Upper Indira Nagar, Bibwewadi, Pune, Maharashtra, 411037, India;Vishwakarma University, Survey No 2 3, 4, Kondhwa Main Rd, Laxmi Nagar, Betal Nagar, Kondhwa, Pune, Maharashtra, 411048, India ~72: BONDRE, Srushti Jitendra;BUCHADE, Rishita;DESHMUKH, Minal Samir;KSHIRSAGAR, Ketki Prashant~

2026/10898 ~ Complete ~54:A DETERMINISTIC STRUCTURAL SYSTEM FOR REAL-TIME RECOGNITION OF DYNAMIC SIGN LANGUAGE GESTURES ~71:Vishwakarma Institute of Technology, 666, Upper Market RD, Upper Indira Nagar, Bibwewadi, Pune, Maharashtra, 411037, India;Vishwakarma University, Survey No 2 3, 4, Kondhwa Main Rd, Laxmi Nagar, Betal Nagar, Kondhwa, Pune, Maharashtra, 411048, India ~72: PATIL, Anannya Yogesh;THOPATE, Kaushalya Vaibhav;YADAV, Jyoti Hindurao~

2026/10907 ~ Complete ~54:AN ADAPTIVE WEARABLE OCULAR COMMUNICATION SYSTEM USING BLINK–GAZE PATTERN FUSION FOR MOTOR-IMPAIRED USERS ~71:Vishwakarma Institute of Technology, 666, Upper Market RD, Upper Indira Nagar, Bibwewadi, Pune, Maharashtra, 411037, India;Vishwakarma University, Survey No 2 3, 4, Kondhwa Main Rd, Laxmi Nagar, Betal Nagar, Kondhwa, Pune, Maharashtra, 411048, India ~72: BHATLAWANDE, Shripad;KURHADE, Atharva;MADAKE, Jyoti;MUDPE, Sanket;SANGARME, Mukesh;SHILASKAR, Swati~

2026/10917 ~ Complete ~54:A SECURE MULTI-TENANT SYSTEM WITH AI-BASED ENERGY ANALYTICS AND ADVISORY ~71:Vishwakarma Institute of Technology, 666, Upper Market RD, Upper Indira Nagar, Bibwewadi, Pune, Maharashtra, 411037, India;Vishwakarma University, Survey No 2 3, 4, Kondhwa Main Rd, Laxmi Nagar, Betal Nagar, Kondhwa, Pune, Maharashtra, 411048, India ~72: KHADAKE, Atharva;KSHIRSAGAR, Ketki;PAWAR, Vaishnavi;RATNAPARKHI, Archana;THOMBARE, Dhawal;WADHWANI, Manish~

2026/10925 ~ Complete ~54:AN OBJECT DETECTION-BASED NAVIGATION SYSTEM FOR THE VISUALLY IMPAIRED ~71:Vishwakarma Institute of Technology, 666, Upper Market RD, Upper Indira Nagar, Bibwewadi, Pune, Maharashtra, 411037, India;Vishwakarma University, Survey No 2 3, 4, Kondhwa Main Rd, Laxmi Nagar, Betal Nagar, Kondhwa, Pune, Maharashtra, 411048, India ~72: DANDAWATE, Yogesh;GHULE, Gauri;KULKARNI, Ratnanabh Jayant;RAJPUT, Tanushri Chetan;SHINDE, Viraj Shreenath~

2026/10930 ~ Complete ~54:AN OFFLINE LORA MESH EMERGENCY COMMUNICATION SYSTEM ~71:Vishwakarma Institute of Technology, 666, Upper Market RD, Upper Indira Nagar, Bibwewadi, Pune, Maharashtra, 411037, India;Vishwakarma University, Survey No 2 3, 4, Kondhwa Main Rd, Laxmi Nagar, Betal Nagar, Kondhwa, Pune, Maharashtra, 411048, India ~72: DONGRE, Ojas Amitkumar;GAWALI, Palomi Sandeep;PACHPOR, Om Dinkar;PATIL, Om Sharad;TAYADE, Om Devendra;WATANE, Om Avinash~

2026/10940 ~ Complete ~54:SMALL INTERFERING RNA TARGETING CFB AND USES THEREOF ~71:SANEGENE BIO USA INC., 300 Tradecenter Drive, Suite 5500, Woburn, Massachusetts 01801, United States of America ~72: GENG, Xin;WANG, Shiyu;WANG, Weimin;ZHANG, Chunyang~ 33:US ~31:63/661,546 ~32:18/06/2024

2026/10874 ~ Complete ~54:A FAILURE-AWARE DYNAMIC RESOURCE REALLOCATION SYSTEM USING PREDICTIVE MICRO-ANOMALY DETECTION ~71:Vishwakarma Institute of Technology, 666, Upper Market RD, Upper Indira Nagar, Bibwewadi, Pune, Maharashtra, 411037, India;Vishwakarma University, Survey No 2 3, 4, Kondhwa Main Rd, Laxmi Nagar, Betal Nagar, Kondhwa, Pune, Maharashtra, 411048, India ~72: GADEWAR, Sohan Rajendra;MAGAR, Hanmant;PATIL, Shravan Anil;PENSALWAR, Ranveer Shyam;PRASAD, Shivam Chandan~

2026/10877 ~ Complete ~54:AN INTELLIGENT MEDICATION ADHERENCE MONITORING SYSTEM ~71:Vishwakarma Institute of Technology, 666, Upper Market RD, Upper Indira Nagar, Bibwewadi, Pune, Maharashtra, 411037, India;Vishwakarma University, Survey No 2 3, 4, Kondhwa Main Rd, Laxmi Nagar, Betal Nagar, Kondhwa, Pune, Maharashtra, 411048, India ~72: DEO, Raghav Mahesh;JANOKAR, Sagar;JOSHI, Kalpesh Vinayak;PATIL, Prerna Nilkanth;RAJPUT, Vivek Yogendrasing;SHIVALE, Pruthviraj Rajendra;TIWARI, Priyal Pramod~

2026/10882 ~ Complete ~54:AN ADAPTIVE IOT-BASED INTELLIGENT DOOR AUTHENTICATION SYSTEM USING SELF-LEARNING KNOCK PATTERN RECOGNITION ~71:Vishwakarma Institute of Technology, 666, Upper Market RD, Upper Indira Nagar, Bibwewadi, Pune, Maharashtra, 411037, India;Vishwakarma University, Survey No 2 3, 4, Kondhwa Main Rd, Laxmi Nagar, Betal Nagar, Kondhwa, Pune, Maharashtra, 411048, India ~72: INGALE, Anup;KEDAR, Ashcharya;KHADSE, Komal;KHAIRNAR, Hiren;KHAMKAR, Mrunal;MOHITE, Madhavi A.;PATIL, Vaishali;RAUT, Avinash~

2026/10888 ~ Complete ~54:A NON-INVASIVE PHYSIOLOGICAL ASSESSMENT APPARATUS ~71:Vishwakarma Institute of Technology, 666, Upper Market RD, Upper Indira Nagar, Bibwewadi, Pune, Maharashtra, 411037, India;Vishwakarma University, Survey No 2 3, 4, Kondhwa Main Rd, Laxmi Nagar, Betal Nagar, Kondhwa, Pune, Maharashtra, 411048, India ~72: BHATT, Anushka;BORKAR, Ojasvi Rakesh;MHETRE, Manisha;SONAWANE, Saksham Rajesh~

2026/10908 ~ Complete ~54:A SYSTEM FOR CLOUD-ENABLED SMART GRAIN STORAGE MONITORING AND AUTOMATED ENVIRONMENTAL REGULATION ~71:Vishwakarma Institute of Technology, 666, Upper Market RD, Upper Indira Nagar, Bibwewadi, Pune, Maharashtra, 411037, India;Vishwakarma University, Survey No 2 3, 4, Kondhwa Main Rd, Laxmi Nagar, Betal Nagar, Kondhwa, Pune, Maharashtra, 411048, India ~72: CHITRE, Abhijit V.;DESHMUKH, Minal S.;GAWANDE, Pravin G.;KENDRE, Vedant Madhav;RAUT, Ketan J.;SHAMBHARKAR, Kalpak Uday;SOANWANE, Ketan Rajesh~

2026/10910 ~ Complete ~54:A HIGHWAY ENERGY GENERATION SYSTEM USING MOVING VEHICLES ~71:Vishwakarma Institute of Technology, 666, Upper Market RD, Upper Indira Nagar, Bibwewadi, Pune, Maharashtra, 411037, India;Vishwakarma University, Survey No 2 3, 4, Kondhwa Main Rd, Laxmi Nagar, Betal Nagar, Kondhwa, Pune, Maharashtra, 411048, India ~72: JADHAV, Shravani Santaji;SABLE, Shrushti Sachin;SHINDE, Dhananjay;UPADHYE, Gopal Dadarao~

2026/10915 ~ Complete ~54:AN IOT-BASED PREDICTIVE MAINTENANCE SYSTEM USING ESP32 AND MACHINE LEARNING ~71:Vishwakarma Institute of Technology, 666, Upper Market RD, Upper Indira Nagar, Bibwewadi, Pune, Maharashtra, 411037, India;Vishwakarma University, Survey No 2 3, 4, Kondhwa Main Rd, Laxmi Nagar, Betal Nagar, Kondhwa, Pune, Maharashtra, 411048, India ~72: JOSHI, Soham Narendra;KHUBCHANDANI, Jyoti Ashok;KHUBCHANDANI, Payal Ashok;MOTE, Soham Sandeep;OMBALE, Soham Vasant;SARODE, Soham Sampat;SHEKDE, Soham Sachin~

2026/10918 ~ Complete ~54:A SYSTEM FOR IOT-ENABLED SMART POSTURE MONITORING, AUTOMATED ANALYSIS AND CORRECTIVE GUIDANCE ~71:Vishwakarma Institute of Technology, 666, Upper Market RD, Upper Indira Nagar, Bibwewadi, Pune, Maharashtra, 411037, India;Vishwakarma University, Survey No 2 3, 4,

Kondhwa Main Rd, Laxmi Nagar, Betal Nagar, Kondhwa, Pune, Maharashtra, 411048, India ~72: BAJPAI, Lakshya Prakash;BHOPE, Arjun Shrinivas;KHAN, Arshad Azmat;MORE, Kiran;PAWAR, Prachi;SHARMA, Anurag Harish~

2026/10921 ~ Complete ~54:A WEB-BASED BILINGUAL SYSTEM FOR ENHANCING FINANCIAL LITERACY ~71:Vishwakarma Institute of Technology, 666, Upper Market RD, Upper Indira Nagar, Bibwewadi, Pune, Maharashtra, 411037, India;Vishwakarma University, Survey No 2 3, 4, Kondhwa Main Rd, Laxmi Nagar, Betal Nagar, Kondhwa, Pune, Maharashtra, 411048, India ~72: JADHAV, Balasaheb;JADHAV, Ritesh Sanjay;KHEDEKAR, Lokesh;MATHUR, Rishika;TAYADE, Riya Dhiraj;TODSAM, Rohan Someshwar~

2026/10932 ~ Complete ~54:AN NLP-BASED SYSTEM FOR MULTILINGUAL MEDICAL REPORT SIMPLIFICATION AND AUDIO ASSISTANCE ~71:Vishwakarma Institute of Technology, 666, Upper Market RD, Upper Indira Nagar, Bibwewadi, Pune, Maharashtra, 411037, India;Vishwakarma University, Survey No 2 3, 4, Kondhwa Main Rd, Laxmi Nagar, Betal Nagar, Kondhwa, Pune, Maharashtra, 411048, India ~72: CHAVAN, Sakshi Sushil;DHULE, Sankalp Mahendra;MHETRE, Manisha~

2026/10941 ~ Complete ~54:RAS INHIBITORS ~71:REVOLUTION MEDICINES, INC., 700 Saginaw Drive, Redwood City, California, 94063, United States of America ~72: ALACHOUZOS, Georgios;BURNETT, G. Leslie;EDWARDS, Anne V;GILL, Adrian L;KOLTUN, Elena S;LATIMER, Bernadette K;LUU, Nguyen Hong Quang;MADEJ, Benjamin D;POTA, Kristof;THOMPSON, Severin;TOMLINSON, Aidan;TYE, Mark;WU, Kingsley Y~ 33:US ~31:63/648,875 ~32:17/05/2024;33:US ~31:63/736,143 ~32:19/12/2024;33:US ~31:63/790,944 ~32:18/04/2025

2026/10887 ~ Complete ~54:A CRYPTOGRAPHICALLY VERIFIABLE AI GOVERNANCE AND ORCHESTRATION SYSTEM FOR SECURE EXECUTION OF AI-GENERATED ACTIONS ~71:Vishwakarma Institute of Technology, 666, Upper Market RD, Upper Indira Nagar, Bibwewadi, Pune, Maharashtra, 411037, India;Vishwakarma University, Survey No 2 3, 4, Kondhwa Main Rd, Laxmi Nagar, Betal Nagar, Kondhwa, Pune, Maharashtra, 411048, India ~72: KARKELE, Om;KASHID, Yash;KATKAR, Aditya;MANDHANE, Kartik;MORE, Manisha~

2026/10894 ~ Complete ~54:A GENERATIVE AI-BASED CLOUD SYSTEM FOR AUTOMATED AND TRUST-CONTROLLED CLOUD RESOURCE PROVISIONING ~71:Vishwakarma Institute of Technology, 666, Upper Market RD, Upper Indira Nagar, Bibwewadi, Pune, Maharashtra, 411037, India;Vishwakarma University, Survey No 2 3, 4, Kondhwa Main Rd, Laxmi Nagar, Betal Nagar, Kondhwa, Pune, Maharashtra, 411048, India ~72: KALE, Rashmi Bhaskarrao;KIMBAHUNE, Vinod Vijaykumar;KOKANE, Chandrkant Dilip;LONDHE, Aoudumber Dattatray;MAHALLE, Parikshit Narendra;NAVALE, Geeta Sajjan;PISE, Ganesh Shivaji;SHINDE, Sandip R.~

2026/10899 ~ Complete ~54:A REAL-TIME MULTI-DIRECTIONAL OBSTACLE DETECTION AND INTELLIGENT ALERT SYSTEM FOR VEHICLE SAFETY ~71:Vishwakarma Institute of Technology, 666, Upper Market RD, Upper Indira Nagar, Bibwewadi, Pune, Maharashtra, 411037, India;Vishwakarma University, Survey No 2 3, 4, Kondhwa Main Rd, Laxmi Nagar, Betal Nagar, Kondhwa, Pune, Maharashtra, 411048, India ~72: PARDESHI, Vaishnavi Anand;THOPATE, Kaushalya Vaibhav;YADAV, Jyoti Hindurao~

2026/10909 ~ Complete ~54:AN AUTOMATED PLASTIC WASTE SORTING SYSTEM ~71:Vishwakarma Institute of Technology, 666, Upper Market RD, Upper Indira Nagar, Bibwewadi, Pune, Maharashtra, 411037, India;Vishwakarma University, Survey No 2 3, 4, Kondhwa Main Rd, Laxmi Nagar, Betal Nagar, Kondhwa, Pune, Maharashtra, 411048, India ~72: BHATTACHARJEE, Tanushree;CHAUDHARI, Pratyush Kunal;CHITRE, Abhijit V.;DAWALE, Vyankatesh Dattatray;DHAKNE, Atharva Namdeo;RAUT, Ketan J.~

2026/10914 ~ Complete ~54:AN INTELLIGENT TRAFFIC SIGNAL SYSTEM FOR EMERGENCY VEHICLE PRIORITY MANAGEMENT ~71:Vishwakarma Institute of Technology, 666, Upper Market RD, Upper Indira

Nagar, Bibwewadi, Pune, Maharashtra, 411037, India;Vishwakarma University, Survey No 2 3, 4, Kondhwa Main Rd, Laxmi Nagar, Betal Nagar, Kondhwa, Pune, Maharashtra, 411048, India ~72: KHUBCHANDANI, Jyoti Ashok;KHUBCHANDANI, Payal Ashok;LANGHI, Sakshi Dagadu;SALUNKHE, Prathamesh Kisan;SALUNKHE, Shruti Laxman;SALUNKHE, Vedant Jaywant~

2026/10916 ~ Complete ~54:AN ARTIFICIAL INTELLIGENCE-BASED ADAPTIVE PRODUCTIVITY AND DIGITAL WELLBEING MANAGEMENT SYSTEM ~71:Vishwakarma Institute of Technology, 666, Upper Market RD, Upper Indira Nagar, Bibwewadi, Pune, Maharashtra, 411037, India;Vishwakarma University, Survey No 2 3, 4, Kondhwa Main Rd, Laxmi Nagar, Betal Nagar, Kondhwa, Pune, Maharashtra, 411048, India ~72: JANOKAR, Sagar Gajanan;JOSHI, Kalpesh Vinayak;KAUTHALE, Suyash Subhash;KAWADE, Yash Ramdas;KAWTIKWAR, Mahesh Ambadas;KAYARKAR, Om yogeshwar;NIMABALKAR, Kedar Vinayak~

2026/10929 ~ Complete ~54:A COMPONENT-MINIMIZED DECIMAL TO BCD ENCODER AND SEVEN-SEGMENT DISPLAY DECODER SYSTEM ~71:Vishwakarma Institute of Technology, 666, Upper Market RD, Upper Indira Nagar, Bibwewadi, Pune, Maharashtra, 411037, India;Vishwakarma University, Survey No 2 3, 4, Kondhwa Main Rd, Laxmi Nagar, Betal Nagar, Kondhwa, Pune, Maharashtra, 411048, India ~72: AHER, Vijaya Navnath;HODLURKAR, Gauri Nilesh;JADHAV, Harshvardhan Manoj;JADHAV, Suyash Satish;JOSHI, Arya Gajanan~

2026/10865 ~ Provisional ~54:A HETEROGENEOUS SEMICONDUCTOR ARCHITECTURE, COMPUTE-IN-MEMORY VECTOR-SYMBOLIC ENGINE, AND THERMODYNAMIC PILLAR INFRASTRUCTURE FOR WIRE-SPEED BITEMPORAL HYPERGRAPH PROCESSING, CONTINUOUS-STATE ADJUDICATION, AND CYBER-PHYSICAL EDGE GOVERNANCE ~71:Warwick Sean Metcalfe, 81 Persimmon Street, South Africa ~72: Warwick Sean Metcalfe~ 33:ZA ~31:026/05292, ~32:15/05/2026

2026/10867 ~ Provisional ~54:E-CUFF ~71:David Victor De Jager, 77 or thambo,potchefstroom,2531, South Africa;Johannes Andries de jager, 77 or thambo,potchefstroom,2531, South Africa ~72: David Victor De Jager;Johannes Andries de jager~

2026/10870 ~ Complete ~54:MULTI-DEGREE-OF-FREEDOM CAMERA ADJUSTMENT BRACKET AND INSPECTION SYSTEM FOR A PRODUCTION LINE VISUAL INSPECTION STATION ~71:Chengdu Vocational & Technical College of Industry, No. 818, Da'an Road, Zhengxing Town, Chengdu Area, Tianfu New Area, Chengdu City, Sichuan Province, 610000, People's Republic of China ~72: Keliang LU;Mingxia XU;Shaojie FAN;Wei JIANG~

2026/10872 ~ Complete ~54:A SYSTEM FOR PREDICTIVE CLOUD RESOURCE ALLOCATION AND AUTONOMOUS SCALING USING RUNTIME TELEMETRY ~71:Vishwakarma Institute of Technology, 666, Upper Market RD, Upper Indira Nagar, Bibwewadi, Pune, Maharashtra, 411037, India;Vishwakarma University, Survey No 2 3, 4, Kondhwa Main Rd, Laxmi Nagar, Betal Nagar, Kondhwa, Pune, Maharashtra, 411048, India ~72: MAGAR, Hanmant;MIRAJKAR, Riddhi;PHANASE, Siddhika~

2026/10880 ~ Complete ~54:AN AI-DRIVEN SYSTEM FOR INTELLIGENT PROJECT MANAGEMENT WITH GITHUB–NLP PROGRESS MONITORING ~71:Vishwakarma Institute of Technology, 666, Upper Market RD, Upper Indira Nagar, Bibwewadi, Pune, Maharashtra, 411037, India;Vishwakarma University, Survey No 2 3, 4, Kondhwa Main Rd, Laxmi Nagar, Betal Nagar, Kondhwa, Pune, Maharashtra, 411048, India ~72: MOTE, Riya Hemant;MUKANE, Mohit;NEVHAL, Sayali;NIBANDHE, Anushka;NIKUMB, Amogh;VAYADANDE, Kuldeep~

2026/10881 ~ Complete ~54:A COMPUTER-IMPLEMENTED SYSTEM FOR REAL-TIME EQUIPMENT RENTAL MANAGEMENT WITH PREDICTIVE ANALYTICS AND ANOMALY DETECTION ~71:Vishwakarma Institute of Technology, 666, Upper Market RD, Upper Indira Nagar, Bibwewadi, Pune, Maharashtra, 411037, India;Vishwakarma University, Survey No 2 3, 4, Kondhwa Main Rd, Laxmi Nagar, Betal Nagar, Kondhwa, Pune,

Maharashtra, 411048, India ~72: MHASHAKHETRI, Krish Mukund;MISHRA, Piyush Jwalaprasad;MORE, Krish Kiran;MUNESHWAR, Niharika Santosh;TADAVI, Naaz Kiran;VAYADANDE, Kuldeep~

2026/10890 ~ Complete ~54:AN INTEGRATED DRIVER ASSISTANCE SYSTEM WITH PREDICTIVE ROAD RISK ASSESSMENT AND REAL-TIME TRAFFIC SIGN RECOGNITION ~71:Vishwakarma Institute of Technology, 666, Upper Market RD, Upper Indira Nagar, Bibwewadi, Pune, Maharashtra, 411037, India;Vishwakarma University, Survey No 2 3, 4, Kondhwa Main Rd, Laxmi Nagar, Betal Nagar, Kondhwa, Pune, Maharashtra, 411048, India ~72: PATIL, Vedant Ajay;PRAKASH, Veer Abhishek;SWAMI, Kanchan Sadashiv;WANKHEDE, Disha Sushant;ZENDE, Viraj Kiran~

2026/10892 ~ Complete ~54:AN AUTOMATED, ACCURATE AND LOW-COST FOOT-COUNTING SYSTEM FOR DETECTION OF HUMAN MOVEMENT IN A DEFINED SPACE ~71:Vishwakarma Institute of Technology, 666, Upper Market RD, Upper Indira Nagar, Bibwewadi, Pune, Maharashtra, 411037, India;Vishwakarma University, Survey No 2 3, 4, Kondhwa Main Rd, Laxmi Nagar, Betal Nagar, Kondhwa, Pune, Maharashtra, 411048, India ~72: CHAVAN, Rugved;CHIDRAWAR, Achal;CHOUDHARI, Chinmayee;DABADE, Aditya;DAKARE, Parth;UPADHYE, Gopal Dadarao~

2026/10895 ~ Complete ~54:AN ARTIFICIAL INTELLIGENCE-BASED SYSTEM FOR AUTOMATED GENERATION OF ADAPTIVE QUIZ ASSESSMENTS FROM USER-SUPPLIED STUDY MATERIAL ~71:Vishwakarma Institute of Technology, 666, Upper Market RD, Upper Indira Nagar, Bibwewadi, Pune, Maharashtra, 411037, India;Vishwakarma University, Survey No 2 3, 4, Kondhwa Main Rd, Laxmi Nagar, Betal Nagar, Kondhwa, Pune, Maharashtra, 411048, India ~72: DHABEKAR, Sumit Sunil;GILDA, Spandan Shrikant;KHUBCHANDANI, Jyoti Ashok;KHUBCHANDANI, Payal Ashok;KULKARNI, Sreepad Vijay;SUKHADEO, Bhavesh Latish;SULTAN, Aadiba Mohiyoddin~

2026/10862 ~ Provisional ~54:PROCESS AND METHOD FOR VALORISING BRINE SOLUTION OBTAINED FROM A CATION EXCHANGE RESIN REGENERATED WITH NITRIC ACID ~71:OCKERT TOBIAS VAN NIEKERK, 274 Goud Street, South Africa ~72: OCKERT TOBIAS VAN NIEKERK~

2026/10889 ~ Complete ~54:A WEARABLE SENSOR-BASED SYSTEM AND METHOD FOR BIDIRECTIONAL SIGN LANGUAGE COMMUNICATION ~71:Vishwakarma Institute of Technology, 666, Upper Market RD, Upper Indira Nagar, Bibwewadi, Pune, Maharashtra, 411037, India;Vishwakarma University, Survey No 2 3, 4, Kondhwa Main Rd, Laxmi Nagar, Betal Nagar, Kondhwa, Pune, Maharashtra, 411048, India ~72: DESHPANDE, R. S.;KOTHALE, Saksham;KOTHARI, Yug Sachin;KOTHAWADE, Shreya Kiran;KOTWAD, Naresh Sachin;NAGPURE, Krishna~

2026/10902 ~ Complete ~54:AN EDGE-BASED SYSTEM FOR MULTIMODAL AUDIO SYNCHRONIZATION AND CONTEXT-AWARE REAL-TIME ANALYSIS ~71:Vishwakarma Institute of Technology, 666, Upper Market RD, Upper Indira Nagar, Bibwewadi, Pune, Maharashtra, 411037, India;Vishwakarma University, Survey No 2 3, 4, Kondhwa Main Rd, Laxmi Nagar, Betal Nagar, Kondhwa, Pune, Maharashtra, 411048, India ~72: ANJIKHANE, Shreya Vijaykumar;BARHATE, Minal;CHAUDHARY, Siony Naresh;DHAKANE, Aditya Arun;MHETRE, Vaibhav Mallikarjun;SHAH, Arya Chetan~

2026/10912 ~ Complete ~54:A REAL-TIME SOUND LEVEL MONITORING AND WEB SERVER -ASSISTED ALARM SYSTEM ~71:Vishwakarma Institute of Technology, 666, Upper Market RD, Upper Indira Nagar, Bibwewadi, Pune, Maharashtra, 411037, India;Vishwakarma University, Survey No 2 3, 4, Kondhwa Main Rd, Laxmi Nagar, Betal Nagar, Kondhwa, Pune, Maharashtra, 411048, India ~72: DESHPANDE, Himani Venkatesh;MASRAM, Sujal Manohar;MEHTA, Ketaki Mukund;METANGALE, Vinayak Khushalrao;MIRASDAR, Kanad Darshan~

2026/10920 ~ Complete ~54:A WEARABLE BIOFEEDBACK SYSTEM FOR REAL-TIME STRESS MANAGEMENT ~71:Vishwakarma Institute of Technology, 666, Upper Market RD, Upper Indira Nagar, Bibwewadi, Pune, Maharashtra, 411037, India;Vishwakarma University, Survey No 2 3, 4, Kondhwa Main Rd, Laxmi Nagar, Betal Nagar, Kondhwa, Pune, Maharashtra, 411048, India ~72: BANG, Prasheeta;JADHAV, Balasaheb;KHEDEKAR, Lokesh;MAHAJAN, Prithviraj;THOOL, Pravarchu;VAIDYA, Prem~

2026/10927 ~ Complete ~54:AN ADAPTIVE AI-DRIVEN REAL-TIME SURVEILLANCE SYSTEM FOR OBJECT DETECTION, TRACKING AND CONTEXT-AWARE THREAT ANALYSIS ~71:Vishwakarma Institute of Technology, 666, Upper Market RD, Upper Indira Nagar, Bibwewadi, Pune, Maharashtra, 411037, India;Vishwakarma University, Survey No 2 3, 4, Kondhwa Main Rd, Laxmi Nagar, Betal Nagar, Kondhwa, Pune, Maharashtra, 411048, India ~72: ANJIKHANE, Shreya Vijaykumar;BARHATE, Minal;CHAUDHARY, Siony Naresh;DHAKANE, Aditya Arun;MHETRE, Vaibhav Mallikarjun;SHAH, Arya Chetan~

2026/10934 ~ Complete ~54:ELECTRIC ENERGY METER CAPABLE OF BEING BUILT-IN WITH A HIGH-CURRENT RELAY ~71:JIANGSU SUYUAN JERRY TECHNOLOGY CO., LTD., No. 81 Huashan Road, Suqian High-Tech Industrial Development Zone, People's Republic of China ~72: DU, Shimin;LI, Yang;LU, Mu;ZHAO, Zhengfei;ZHONG, Lei~ 33:CN ~31:2026105261528 ~32:21/04/2026

2026/10939 ~ Complete ~54:SOMATOSTATIN SUBTYPE-2 RECEPTOR (SST2R) NON-PEPTIDE DRUG CONJUGATES AND USES THEREOF ~71:CRINETICS PHARMACEUTICALS, INC., 6055 Lusk Blvd., San Diego, California, 92121, United States of America ~72: CHEN, Mi;SCHKERYANTZ, Jeffrey;ZHAO, Jian;ZHU, Yunfei~ 33:US ~31:63/658,766 ~32:11/06/2024;33:US ~31:63/787,101 ~32:11/04/2025

2026/10864 ~ Provisional ~54:PROTECTION FOR A MECHANICAL PIPE JOINT ~71:Errol Trompeter, 48 Rutland Road, South Africa ~72: Errol Trompeter~

2026/10866 ~ Provisional ~54:A PARAMETER DERIVATION ENGINE ~71:OLFSEN, Megan, Jennifer, 284 MILNER ST, WATERKLOOF, PRETORIA, 0145, SOUTH AFRICA, South Africa ~72: OLFSEN, Megan, Jennifer~

2026/10871 ~ Complete ~54:MILL BRUSH ~71:BABCOCK NTUTHUKO ENGINEERING (PTY) LTD, Riley Road Office Park, 15E Riley Road, Bedfordview, South Africa ~72: NAIDOO, Keagan~

2026/10875 ~ Complete ~54:A SYSTEM FOR INTELLIGENT REAL ESTATE VALUATION USING MULTI-PARAMETER MACHINE LEARNING AND DYNAMIC MARKET ANALYTICS ~71:Vishwakarma Institute of Technology, 666, Upper Market RD, Upper Indira Nagar, Bibwewadi, Pune, Maharashtra, 411037, India;Vishwakarma University, Survey No 2 3, 4, Kondhwa Main Rd, Laxmi Nagar, Betal Nagar, Kondhwa, Pune, Maharashtra, 411048, India ~72: BOBADE, Sandip Yuvraj;DHOTRE, Virendrakumar Anna;JOSHI, Hrushikesh Jaiwant;JOSHI, Rewa Hrushikesh;LONDHE, Aoudumber Dattatray;MAHALLE, Parikshit Narendra;PISE, Ganesh Shivaji;RAJPUT, Viashali Sham;RATHOD, Vijay Uttam;SABLE, Nilesh Popat~

2026/10878 ~ Complete ~54:AN INTELLIGENT ESP32-BASED EMBEDDED ENERGY METERING SYSTEM ~71:Vishwakarma Institute of Technology, 666, Upper Market RD, Upper Indira Nagar, Bibwewadi, Pune, Maharashtra, 411037, India;Vishwakarma University, Survey No 2 3, 4, Kondhwa Main Rd, Laxmi Nagar, Betal Nagar, Kondhwa, Pune, Maharashtra, 411048, India ~72: CHITRE, Abhijit V.;DESHMUKH, Minal S.;GAWANDE, Pravin G.;JOSHI, Kaivalya Ravindra;JUMDE, Trishul Pravin;KALE, Aayush Avinash;RAUT, Ketan J.~

2026/10944 ~ Complete ~54:CRYSTALLINE FORMS OF OXATHIAZOLIDINE UREA COMPOUNDS HAVING PESTICIDAL ACTIVITY ~71:CORTEVA AGRISCIENCE LLC, 9330 Zionsville Road, Indianapolis, Indiana, 46268, United States of America ~72: BABIJ, Nicholas;CHOY, Nakyen;ESSON, Moira;GIAMPIETRO, Natalie C;GOOD, Steffen N;HOUGH, Nicole;LARSEN, Paul;WIENSCH, Eric~ 33:US ~31:63/648,418 ~32:16/05/2024

2026/10883 ~ Complete ~54:A COMPUTER-IMPLEMENTED CONTINUOUS THREAT EXPOSURE MANAGEMENT SYSTEM FOR AUTOMATED WORKSPACE SCRIPTS ~71:Vishwakarma Institute of Technology, 666, Upper Market RD, Upper Indira Nagar, Bibwewadi, Pune, Maharashtra, 411037, India;Vishwakarma University, Survey No 2 3, 4, Kondhwa Main Rd, Laxmi Nagar, Betal Nagar, Kondhwa, Pune, Maharashtra, 411048, India ~72: BARHATE, Madhuri;MANKAR, Atharva;MEHKARKAR, Prasanna Shrikant;MORANKAR, Paresh;MUSALE, Samrudhi;NIKAM, Shravani~

2026/10891 ~ Complete ~54:AN INTELLIGENCE-LEARNING BEHAVIOUR-AWARE AUTONOMOUS DRIVING SYSTEM FOR UNSTRUCTURED ROAD ENVIRONMENTS ~71:Vishwakarma Institute of Technology, 666, Upper Market RD, Upper Indira Nagar, Bibwewadi, Pune, Maharashtra, 411037, India;Vishwakarma University, Survey No 2 3, 4, Kondhwa Main Rd, Laxmi Nagar, Betal Nagar, Kondhwa, Pune, Maharashtra, 411048, India ~72: BOREKAR, Avadhoot;BUCHADE, Amar;KADAM, Prema;KHARE, Amogha Abhijit;KUMAR, Santo;PARKHI, Aadi Praveen;PATIL, Vivek;TAMBOLI, Mohammad Murtaza Waheed;YADAV, Gitanjali Bhimrao~

2026/10897 ~ Complete ~54:AN EMBEDDED MULTIMODAL ASSISTIVE COMMUNICATION SYSTEM FOR REAL-TIME GESTURE AND EMOTION DRIVEN SPEECH SYNTHESIS ~71:Vishwakarma Institute of Technology, 666, Upper Market RD, Upper Indira Nagar, Bibwewadi, Pune, Maharashtra, 411037, India;Vishwakarma University, Survey No 2 3, 4, Kondhwa Main Rd, Laxmi Nagar, Betal Nagar, Kondhwa, Pune, Maharashtra, 411048, India ~72: BHATLAWANDE, Shripad;KONDE, Ninad;KULKARNI, Aadya;KULKARNI, Anirudha;MADAKE, Jyoti;SHILASKAR, Swati~

2026/10904 ~ Complete ~54:A PRIORITY-WEIGHTED HARD-CONSTRAINT STUDENT ACCOMMODATION RECOMMENDATION SYSTEM ~71:Vishwakarma Institute of Technology, 666, Upper Market RD, Upper Indira Nagar, Bibwewadi, Pune, Maharashtra, 411037, India;Vishwakarma University, Survey No 2 3, 4, Kondhwa Main Rd, Laxmi Nagar, Betal Nagar, Kondhwa, Pune, Maharashtra, 411048, India ~72: GAUTAM, Shashwat;GITE, Yogesh;SHELKE, Yashashree;SHETTY, Suhan;SHINDE, Rushikesh;SHINDE, Soham~

2026/10928 ~ Complete ~54:A PARALLEL MULTI-CHANNEL WIRELESS INTERFERENCE DETECTION AND SPECTRUM ANALYSIS SYSTEM ~71:Vishwakarma Institute of Technology, 666, Upper Market RD, Upper Indira Nagar, Bibwewadi, Pune, Maharashtra, 411037, India;Vishwakarma University, Survey No 2 3, 4, Kondhwa Main Rd, Laxmi Nagar, Betal Nagar, Kondhwa, Pune, Maharashtra, 411048, India ~72: AHER, Vijaya;LOHAKARE, Rushikesh;MAHULKAR, Samiksha;MAINDE, Shreesh;PUROHIT, Lokesh~

2026/10935 ~ Complete ~54:GLP-1 RECEPTOR AGONIST, AND USES THEREOF ~71:CHONG KUN DANG PHARMACEUTICAL CORP., 8, Chungjeong-ro, Seodaemun-gu, SEOUL 03742, REPUBLIC OF KOREA, Republic of Korea ~72: GOO, Kyoyoung;IN, Jinkyung;KIM, Woohee;KIM, Yihyun;KWON, Nayoung;LEE, Jaekwang;LEE, Jongbo;MIN, Jaeki;PARK, Eunjee;PARK, Jihye;PARK, Yesong;YOON, Hongju~ 33:KR ~31:10-2024-0079937 ~32:19/06/2024;33:KR ~31:10-2025-0080643 ~32:18/06/2025

2026/10943 ~ Complete ~54:PACKAGING AND METHOD FOR MANUFACTURING SUCH A PACKAGING ~71:STACKPACK B.V., Sluiskade Noordzijde 82, 7602 HV Almelo, Netherlands ~72: ZWAGA, Carina;ZWAGA, Ronald~ 33:EP ~31:24181764.2 ~32:12/06/2024;33:EP ~31:25159323.2 ~32:21/02/2025

2026/10901 ~ Complete ~54:A REAL-TIME STOCK PORTFOLIO TRACKING AND ANALYTICS SYSTEM ~71:Vishwakarma Institute of Technology, 666, Upper Market RD, Upper Indira Nagar, Bibwewadi, Pune, Maharashtra, 411037, India;Vishwakarma University, Survey No 2 3, 4, Kondhwa Main Rd, Laxmi Nagar, Betal Nagar, Kondhwa, Pune, Maharashtra, 411048, India ~72: GAWADE, Mayuri Mangesh;GHARAT, Venu Harshad;KULKARNI, Vedika Makarand;VAISHNAV, Bhumika Vilas;VERMA, Parth Vikram~

2026/10903 ~ Complete ~54:A WEB-CENTRIC ENERGY MONITORING SYSTEM ~71:Vishwakarma Institute of Technology, 666, Upper Market RD, Upper Indira Nagar, Bibwewadi, Pune, Maharashtra, 411037,

India;Vishwakarma University, Survey No 2 3, 4, Kondhwa Main Rd, Laxmi Nagar, Betal Nagar, Kondhwa, Pune, Maharashtra, 411048, India ~72: DANDE, Chirag Sanjay;DUBAL, Atharv Anandrao;DUPARE, Geet Rajnish;GAIKWAD, Vijay Dattatray~

2026/10911 ~ Complete ~54:AN AI-DRIVEN CLOSED-LOOP CROP PLANNING SYSTEM WITH REAL-TIME DISEASE AND MARKET ADAPTATION ~71:Vishwakarma Institute of Technology, 666, Upper Market RD, Upper Indira Nagar, Bibwewadi, Pune, Maharashtra, 411037, India;Vishwakarma University, Survey No 2 3, 4, Kondhwa Main Rd, Laxmi Nagar, Betal Nagar, Kondhwa, Pune, Maharashtra, 411048, India ~72: BUCHADE, Amar R.;DESHMUKH, Aditya Umesh;DESHPANDE, Omkar Sandeep;KADAM, Prema S.;KUKREJA, Harshita;KUMAR, Santosh D.;PATIL, Vivek D.;SHAHANE, Saloni;YADAV, Gitanjali Bhimrao~

2026/10924 ~ Complete ~54:A NON-INVASIVE AUTOMATED INFANT HEALTH MONITORING SYSTEM ~71:Vishwakarma Institute of Technology, 666, Upper Market RD, Upper Indira Nagar, Bibwewadi, Pune, Maharashtra, 411037, India;Vishwakarma University, Survey No 2 3, 4, Kondhwa Main Rd, Laxmi Nagar, Betal Nagar, Kondhwa, Pune, Maharashtra, 411048, India ~72: MASUTI, Arpita Basavraj;MHETRE, Manisha;MULLA, Ayaan Nasar;MUTHAL, Subodh Ashok~

2026/10926 ~ Complete ~54:A REAL-TIME ACOUSTIC EMERGENCY DETECTION SYSTEM ~71:Vishwakarma Institute of Technology, 666, Upper Market RD, Upper Indira Nagar, Bibwewadi, Pune, Maharashtra, 411037, India;Vishwakarma University, Survey No 2 3, 4, Kondhwa Main Rd, Laxmi Nagar, Betal Nagar, Kondhwa, Pune, Maharashtra, 411048, India ~72: BARHATE, Minal;KHATAL, Ayush;KHEDEKAR, Shravani;KHEDKAR, Samarth;KHETMALIS, Shraddha;KHIRAIYA, Krishna;TELSANG, Supriya S.~

2026/10942 ~ Complete ~54:USE OF β2-ADRENERGIC RECEPTOR AGONISTS IN TREATING MUSCLE WASTING ~71:ATROGI AB, Tomtebodavägen 6, 171 65 Solna, Sweden ~72: BENGTSSON, Tore~ 33:GB ~31:2407432.0 ~32:17/05/2024;33:GB ~31:2409386.6 ~32:21/06/2024;33:GB ~31:2410820.1 ~32:24/07/2024;33:GB ~31:2501574.4 ~32:04/02/2025

2026/10896 ~ Complete ~54:A HARDWARE-ASSISTED EXPLAINABLE SKIN DISEASE DIAGNOSTIC SYSTEM FOR LOW-RESOURCE HEALTHCARE ENVIRONMENTS ~71:Vishwakarma Institute of Technology, 666, Upper Market RD, Upper Indira Nagar, Bibwewadi, Pune, Maharashtra, 411037, India;Vishwakarma University, Survey No 2 3, 4, Kondhwa Main Rd, Laxmi Nagar, Betal Nagar, Kondhwa, Pune, Maharashtra, 411048, India ~72: BHATLAWANDE, Shripad;KOGANUR, Soujanya Gangadhar;KOHINKAR, Apurva Digambar;KORE, Mrunal Sanjeevkumar;MADAKE, Jyoti;SHILASKAR, Swati~

2026/10900 ~ Complete ~54:A GRAPH NEURAL NETWORKS AND TEMPORAL LEARNING BASED SOFTWARE QUALITY ASSURANCE SYSTEM ~71:Vishwakarma Institute of Technology, 666, Upper Market RD, Upper Indira Nagar, Bibwewadi, Pune, Maharashtra, 411037, India;Vishwakarma University, Survey No 2 3, 4, Kondhwa Main Rd, Laxmi Nagar, Betal Nagar, Kondhwa, Pune, Maharashtra, 411048, India ~72: MESHRAM, Saniya;PANDHARKAR, Nitin;PATHAK, Krupa;PATIL, Namrata;VAYADANDE, Kuldeep~

2026/10863 ~ Provisional ~54:SOLARSAFEBACKPACK – INTEGRATED SOLAR-POWERED BACKPACK WITH EMERGENCY COMMUNICATION, LOCATION TRACKING AND SAFETY SYSTEM ~71:Lionel James Witbooi, 115 ngxotwane street nu9 motherwell, South Africa ~72: LionelJames Witbooi~

2026/10873 ~ Complete ~54:A FEDERATED EXPLAINABLE AI SYSTEM FOR MULTI-DISEASE DETECTION AND HEALTHCARE OPTIMIZATION ~71:Vishwakarma Institute of Technology, 666, Upper Market RD, Upper Indira Nagar, Bibwewadi, Pune, Maharashtra, 411037, India;Vishwakarma University, Survey No 2 3, 4, Kondhwa Main Rd, Laxmi Nagar, Betal Nagar, Kondhwa, Pune, Maharashtra, 411048, India ~72: KALE, Rashmi Bhaskarrao;KIMBAHUNE, Vinod Vijaykumar;KOKANE, Chandrkant Dilip;LONDHE, Aoudumber Dattatray;MAHALLE, Parikshit Narendra;NAVALE, Geeta Sajjan;PISE, Ganesh Shivaji;SHINDE, Sandip R.~

2026/10876 ~ Complete ~54:A CONSTITUTIONAL LITERACY LEARNING SYSTEM ~71:Vishwakarma Institute of Technology, 666, Upper Market RD, Upper Indira Nagar, Bibwewadi, Pune, Maharashtra, 411037, India;Vishwakarma University, Survey No 2 3, 4, Kondhwa Main Rd, Laxmi Nagar, Betal Nagar, Kondhwa, Pune, Maharashtra, 411048, India ~72: AGARKAR, Aarti;KANJALKAR, Jyoti;KANJALKAR, Pramod;KUMRE, Kshitij;PATIL, Sakshi;PAWADE, Prutha;ZURE, Manish~

2026/10886 ~ Complete ~54:AN AUTONOMOUS AI RESCUE SYSTEM FOR TRAFFIC, RAILWAY, FIRE, AND STRUCTURAL EMERGENCIES ~71:Vishwakarma Institute of Technology, 666, Upper Market RD, Upper Indira Nagar, Bibwewadi, Pune, Maharashtra, 411037, India;Vishwakarma University, Survey No 2 3, 4, Kondhwa Main Rd, Laxmi Nagar, Betal Nagar, Kondhwa, Pune, Maharashtra, 411048, India ~72: KALE, Rashmi Bhaskarrao;KIMBAHUNE, Vinod Vijaykumar;KOKANE, Chandrakant Dilip;LONDHE, Aoudumber Dattatray;MAHALLE, Parikshit Narendra;NAVALE, Geeta Sajjan;PISE, Ganesh Shivaji~

2026/10913 ~ Complete ~54:A UNIFIED SMART AGRICULTURE AND IRRIGATION MANAGEMENT SYSTEM ~71:Vishwakarma Institute of Technology, 666, Upper Market RD, Upper Indira Nagar, Bibwewadi, Pune, Maharashtra, 411037, India;Vishwakarma University, Survey No 2 3, 4, Kondhwa Main Rd, Laxmi Nagar, Betal Nagar, Kondhwa, Pune, Maharashtra, 411048, India ~72: AGRAWAL, Gautam Ashish;DAMUTA, Vedant Santosh;GADEKAR, Vitthal Damuta;GADIYA, Diya Vinod;TANKHADE, Jayashree~

2026/10922 ~ Complete ~54:A MULTI-GATE BIOMETRIC HIGH-SECURITY COURT BOX SYSTEM FOR CONTROLLING ACCESS TO SECURED PHYSICAL ASSETS ~71:Vishwakarma Institute of Technology, 666, Upper Market RD, Upper Indira Nagar, Bibwewadi, Pune, Maharashtra, 411037, India;Vishwakarma University, Survey No 2 3, 4, Kondhwa Main Rd, Laxmi Nagar, Betal Nagar, Kondhwa, Pune, Maharashtra, 411048, India ~72: FOLE, Nishant;GADALE, Aryan;GAIKWAD, Akanksha;GAJBHIYE, Apurva;INGLE, Anup W.;MOHITE, Madhavi;RAIKWAR, Rajesh;SHELKE, Ganesh~

2026/10931 ~ Complete ~54:AN INTEGRATED MULTILINGUAL WEB-BASED SYSTEM FOR AGRICULTURAL CROP TRADING AND LOGISTICS COORDINATION ~71:Vishwakarma Institute of Technology, 666, Upper Market RD, Upper Indira Nagar, Bibwewadi, Pune, Maharashtra, 411037, India;Vishwakarma University, Survey No 2 3, 4, Kondhwa Main Rd, Laxmi Nagar, Betal Nagar, Kondhwa, Pune, Maharashtra, 411048, India ~72: GUPTA, Sahil;JADHAV, Balasaheb;KHEDEKAR, Lokesh;MOTGHARE, Rubal Giridhar;SADANAA S;SALAPURIKAR, Atharva Amol;SALUNKHE, Yash Pramod~

2026/10933 ~ Complete ~54:SPIRAL DISTRIBUTING AND CONVEYING DEVICE FOR ANTI-SEGREGATION ASPHALT MIXTURE ~71:WANG Dong, No. 31 Cuiyingmen, Chengguan District, Lanzhou City, Gansu Province, 730000, People's Republic of China ~72: WANG Dong~

2026/10938 ~ Complete ~54:WEE1 INHIBITOR COMBINATION THERAPY ~71:ZENO MANAGEMENT, INC., 10275 Science Center Drive, Suite 200, SAN DIEGO 92121, CA, USA, United States of America ~72: GUO, Xiao;LEE, Catherine;MA, Jianhui~ 33:US ~31:63/641,587 ~32:02/05/2024;33:US ~31:63/694,334 ~32:13/09/2024

2026/10946 ~ Complete ~54:HANDHELD CANDLE EXTINGUISHING DEVICE ~71:ORITI, Franco, Viale Carlo Cattaneo 23, 6900, Lugano, Switzerland ~72: ORITI, Franco~ 33:IN ~31:202411039026 ~32:17/05/2024

2026/10868 ~ Provisional ~54:CONTROLLABLE, GAPLESS NEGATIVE FEEDBACK REACTOR ~71:Jacobus Johannes van der Merwe, 1060 Pierneef Street, Villieria, South Africa ~72: Jacobus Johannes van der Merwe~

2026/10884 ~ Complete ~54:A COMPUTER-IMPLEMENTED MULTI-MODAL CYBERSECURITY THREAT DETECTION SYSTEM FOR DETECTING AI-GENERATED MEDIA AND SOCIAL ENGINEERING ATTACKS ~71:Vishwakarma Institute of Technology, 666, Upper Market RD, Upper Indira Nagar, Bibwewadi, Pune,

Maharashtra, 411037, India;Vishwakarma University, Survey No 2 3, 4, Kondhwa Main Rd, Laxmi Nagar, Betal Nagar, Kondhwa, Pune, Maharashtra, 411048, India ~72: MANE, Atharvraj Dnyaneshwar;MANE, Rohit Vijay;MANE, Yashwant Tanaji;MAPARI, Omkar Suryakant;SHINDE, Madhuri Narendra~

2026/10885 ~ Complete ~54:A HYBRID VISION-BASED SYSTEM FOR ROBUST REAL-TIME HAND GESTURE RECOGNITION IN HUMAN-ROBOT INTERACTIONS ~71:Vishwakarma Institute of Technology, 666, Upper Market RD, Upper Indira Nagar, Bibwewadi, Pune, Maharashtra, 411037, India;Vishwakarma University, Survey No 2 3, 4, Kondhwa Main Rd, Laxmi Nagar, Betal Nagar, Kondhwa, Pune, Maharashtra, 411048, India ~72: GARDI, Anuj Sharad;GAWADE, Mayuri Mangesh;GOTE, Vidula Arun;GUDUP, Disha Vaijnath;KADALGE, Gauri Vijay~

2026/10893 ~ Complete ~54:A MULTI-CLOUD WORKLOAD MIGRATOR SYSTEM WITH DNS-BASED SERVICE CONTINUITY AND INTELLIGENT CLOUD SELECTION ~71:Vishwakarma Institute of Technology, 666, Upper Market RD, Upper Indira Nagar, Bibwewadi, Pune, Maharashtra, 411037, India;Vishwakarma University, Survey No 2 3, 4, Kondhwa Main Rd, Laxmi Nagar, Betal Nagar, Kondhwa, Pune, Maharashtra, 411048, India ~72: CHAVAN, Tanishka Anil;KIRLOSKAR, Tanvi;KULKARNI, Vidhi;MAGAR, Hanmant D.;PANDITA, Suhani~

2026/10906 ~ Complete ~54:AN AI-BASED EXPLAINABLE CREDIT RISK MANAGEMENT AND INTELLIGENT LOAN DECISION SUPPORT SYSTEM ~71:Vishwakarma Institute of Technology, 666, Upper Market RD, Upper Indira Nagar, Bibwewadi, Pune, Maharashtra, 411037, India;Vishwakarma University, Survey No 2 3, 4, Kondhwa Main Rd, Laxmi Nagar, Betal Nagar, Kondhwa, Pune, Maharashtra, 411048, India ~72: BOBADE, Sandip Yuvraj;DHOTRE, Virendrakumar Anna;JOSHI, Hrushikesh Jaiwant;JOSHI, Rewa Hrushikesh;KALE, Rashmi Bhaskarrao;LONDHE, Aoudumber Dattatray;MAHALLE, Parikshit Narendra;PISE, Ganesh Shivaji;RATHOD, Vijay Uttam;SABLE, Nilesh Popat~

2026/10919 ~ Complete ~54:A SYSTEM FOR INTELLIGENT SHOPPING CART MANAGEMENT AND AUTOMATED BILLING USING RFID TECHNOLOGY ~71:Vishwakarma Institute of Technology, 666, Upper Market RD, Upper Indira Nagar, Bibwewadi, Pune, Maharashtra, 411037, India;Vishwakarma University, Survey No 2 3, 4, Kondhwa Main Rd, Laxmi Nagar, Betal Nagar, Kondhwa, Pune, Maharashtra, 411048, India ~72: AMBURE, Shweta Mangal;KUCHEKAR, Alokratna Navnath;MALWADE, Advait Anil;MORE, Kiran;PAWAR, Prachi;SOLUNKE, Advait Rajendra;THORAT, Adi Vikram~

2026/10923 ~ Complete ~54:A LAWYER AND CLIENT CONNECTIVE LEGAL SYSTEM ~71:Vishwakarma Institute of Technology, 666, Upper Market RD, Upper Indira Nagar, Bibwewadi, Pune, Maharashtra, 411037, India;Vishwakarma University, Survey No 2 3, 4, Kondhwa Main Rd, Laxmi Nagar, Betal Nagar, Kondhwa, Pune, Maharashtra, 411048, India ~72: GOYAL, Lakshya;LAKHOTIA, Bhavik;LANDGE, Shreyash;LOKHANDE, Mohit;LOKHARE, Harsh;SHINDE, Madhuri~

2026/10936 ~ Complete ~54:SUBSTITUTED PYRAZOLOPYRIDINE AND PYRAZOLOPYRIMIDINE COMPOUNDS AND THEIR USE ~71:GT GAIN THERAPEUTICS SA, Via Francesco Soave 6, LUGANO 6900, SWITZERLAND, Switzerland ~72: CARRILLO ARREGUI, Jokin;CUBERO JORDÀ, Elena;GARCÍA COLLAZO, Ana Maria;MORENO MOLLÓ, Immaculada Montserrat;TRAPERO PUIG, Ana;ÁLVAREZ GARCÍA, Daniel~ 33:EP ~31:24382380.4 ~32:11/04/2024

2026/10937 ~ Complete ~54:TYROSINASE INHIBITOR AND USE THEREOF ~71:SUZHOU KINTOR PHARMACEUTICALS, INC., No. 20 Songbei Road, Suzhou Industrial Park, Suzhou Area of (Jiangsu) Pilot Free Trade Zone, SUZHOU 215123, JIANGSU, CHINA (P.R.C.), People's Republic of China ~72: CHEN, Dong;HOU, Xiaodan;LI, Yunhui;REN, Zhihua;TONG, Youzhi~ 33:CN ~31:202410533986.2 ~32:30/04/2024;33:CN ~31:202411158652.8 ~32:22/08/2024

2026/10945 ~ Complete ~54:FUEL CELL VEHICLE AND A POWER MODULE FOR USE IN THE FUEL CELL VEHICLE ~71:UNIVERSITY OF THE WESTERN CAPE, Robert Sobukwe Road, Bellville, Cape Town, Western Cape, 7535, South Africa ~72: DAVIDS, Moegamat Wafeeq;LINKOV, Vladimir Mikhailovich;LOTOTSKYY, Mykhaylo Volodymyrovich;PASUPATHI, Sivakumar;SWANEPOEL, Dana;TOLJ, Ivan~ 33:GB ~31:2408072.3 ~32:06/06/2024

. - APPLIED ON 2026/11/11 -

2026/10988 ~ Complete ~54:A SYSTEM AND METHOD FOR PROVIDING INTERACTIVE TRAINING ~71:GREGORY CHARLES KINGSLEY DRAKE, 16 Ellis Place, South Africa;JAMES SHERWOOD, 16 Ellis Place, South Africa ~72: GREGORY CHARLES KINGSLEY DRAKE;JAMES SHERWOOD~ 33:ZA ~31:2025/06864 ~32:18/08/2025

2026/10967 ~ Complete ~54:A FACILITY AND A MEMBRANE PROCESS FOR COST OPTIMIZED SEPARATING METHANE AND CARBON DIOXIDE FROM A GAS STREAM WITH VERY LOW METHANE EMISSION ~71:EVONIK OPERATIONS GMBH, OPERNPLATZ 1, 45128 ESSEN, GERMANY, Germany ~72: FORTE, Esther;KREIS, Peter;KUHLMANN, Hanns;PRISKE, Markus~ 33:EP ~31:24170741.3 ~32:17/04/2024

2026/10949 ~ Complete ~54:PIPE AND CONNECTOR ASSEMBLY ~71:WRIGHT, John Peter, 161 Galjoen Road, Wadeville, South Africa ~72: WRIGHT, John Peter~ 33:ZA ~31:2025/06935 ~32:20/08/2025

2026/10955 ~ Complete ~54:ADDITIVELY MANUFACTURED CONCRETE CAPACITOR ~71:STELLENBOSCH UNIVERSITY, Admin B, Victoria Street, South Africa ~72: GIBSON, Ruby Josephine;KRUGER, Pienaar Jacques~

2026/10960 ~ Complete ~54:APOL1 INHIBITORS AND METHODS OF USE THEREOF ~71:MAZE THERAPEUTICS, INC., 171 Oyster Point Blvd, Suite 300, South San Francisco, California, 94080, United States of America ~72: BRONNER, Sarah M;MORGANS JR., David John;REID, Adam Neil;TEP, Samnang;TSE, Winston Chung Ming;ZHANG, Birong;ZIEBENHAUS, Chris~ 33:US ~31:63/634,334 ~32:15/04/2024;33:US ~31:63/706,587 ~32:11/10/2024;33:US ~31:63/783,774 ~32:04/04/2025

2026/10961 ~ Complete ~54:PIVOTING DOOR FOR A SCAFFOLD ~71:WILHELM LAYHER VERWALTUNGS-GMBH, Ochsenbacher Straße 56, 74363 Güglingen-Eibensbach, Germany ~72: BEHRBOHM, Wolf C~ 33:DE ~31:10 2024 128 325.4 ~32:01/10/2024

2026/10951 ~ Complete ~54:ADAPTIVE TRAJECTORY TRACKING METHOD AND SYSTEM FOR SHIP BERTHING ~71:Dalian Maritime University, No. 1 Linghai Road, Lingshui Subdistrict, Ganjingzi District, Dalian City, Liaoning Province, People's Republic of China ~72: Chao Li;Fayong Qi;Junlin Dai;Mingyang Pan;Shulong Dai;Wei Li;Zhenbao Li~

2026/10963 ~ Complete ~54:BICYCLIC HETEROCYCLE COMPOUNDS FOR TREATMENT OF HERPES VIRUSES ~71:ASSEMBLY BIOSCIENCES, INC., Two Tower Place, 7th Floor South San Francisco, California, 94080, United States of America ~72: BURES, Mark;WALKER, Michael;YU, Jiaxin;ZHANG, Jian;ZHONG, Min~ 33:US ~31:63/639,269 ~32:26/04/2024

2026/10970 ~ Complete ~54:TETRAVALENT AGONISTS OF ERYTHROPOIETIN RECEPTOR ~71:EPOK THERAPEUTICS INC., BAY ADELAIDE CENTRE, NORTH TOWER, 40 TEMPERANCE STREET, SUITE 3200, TORONTO, ONTARIO M5H 0B4, CANADA, Canada ~72: ADAMS, Jarrett;BLAZER, Levi, L.;MOE, Orson, W.;SIDHU, Sachdev~ 33:EP ~31:24175368.0 ~32:13/05/2024

2026/10980 ~ Complete ~54:ANTIMICROBIAL PHOTODYNAMIC INACTIVATION FOR INHIBITION OF BIOFILMS ~71:UNIVERSITY OF SOUTH AFRICA, Muckleneuk Campus, Theo van Wyk Building, PRETORIA 0001, SOUTH AFRICA, South Africa ~72: MALOMANE , Nonkululeko;MANAGA, Muthumuni;MOUTLOALI , Richard~ 33:GB ~31:2406259.8 ~32:03/05/2024

2026/10983 ~ Provisional ~54:NECESSARY BENEFICIAL BOOKHOLDER ~71:HILTON BRIAN THOMAS, 309 THORA CRT., KITE STR., HORISON,, South Africa ~72: HILTON BRIAN THOMAS~

2026/11103 ~ Provisional ~54:ORAEL SMARTLOAD ENERGY AND WATER PATENT ~71:Elvis Molope, 0063BB Lerome South, Level 2, South Africa;Oratile emmanuel, 0063BB Lerome South, Level 2, South Africa ~72: Elvis Molope;Oratile emmanuel~ 33:ZA ~31:65091 ~32:10/11/2026

2026/10952 ~ Complete ~54:METHOD FOR PREPARING HIGHER ALCOHOLS BY HYDROGENATION OF CARBON DIOXIDE ~71:YULIN UNIVERSITY, NO. 51, CHONGWEN ROAD, YULIN CITY, People's Republic of China ~72: CAO, Yingying;LI, Baoning;LI, Jian;WEI, Yijie~

2026/10957 ~ Complete ~54:MESSAGING PLATFORM-BASED OPERATING SYSTEM ~71:BRIERS, Pierre, Francois, Melchior, 125 BUITENGRAGHT CENTRE, CAPE TOWN, 8001, SOUTH AFRICA, South Africa ~72: BRIERS, Pierre, Francois, Melchior~ 33:ZA ~31:2026/06919 ~32:06/07/2026

2026/10962 ~ Complete ~54:ADMINISTRATION OF NGF FOR THE TREATMENT OF NIEMANN-PICK TYPE C DISEASE ~71:DOMPE' FARMACEUTICI S.P.A., Via San Martino 12, 20122 Milano, Italy ~72: CYPRIANO DUTRA, Rafael;DE LUCIA, Maria;SEGATTO, Marco;SIRICO, Anna~ 33:EP ~31:24179919.6 ~32:04/06/2024

2026/10964 ~ Complete ~54:ANTI-NGF ANTIBODIES AND USES THEREOF ~71:INVETX, INC., One Boston Place, 201 Washington Street, Suite 3930, Boston, Massachusetts, 02108, United States of America ~72: BRONDYK, William;SEVIGNY, Leila~ 33:US ~31:63/649,637 ~32:20/05/2024

2026/10965 ~ Complete ~54:DEVICE FOR SUBDERMAL INSERTION OF SOLID MEDIA ~71:EASTERN VIRGINIA MEDICAL SCHOOL, 735 Fairfax Ave., Suite 1008C, Norfolk, Virginia, 23507, United States of America ~72: CLARK, Meredith;DONCEL, Gustavo F;HUANG, Daniel;PEET, Melissa M;ROBINSON, Jason;WUCHERPFENNIG, Thomas~ 33:US ~31:63/644,288 ~32:08/05/2024;33:US ~31:63/750,062 ~32:27/01/2025

2026/10971 ~ Complete ~54:VALID AREA AND/OR NON-VALID AREA FOR POSITIONING SOLUTIONS ~71:TELEFONAKTIEBOLAGET LM ERICSSON (PUBL), SE-164 83 STOCKHOLM, SWEDEN, Sweden ~72: XIONG, Zhilan~ 33:US ~31:63/633,990 ~32:15/04/2024

2026/10973 ~ Complete ~54:NOVEL MODIFIED SIDE CHAIN, AND PREPARATION METHOD THEREFOR AND USE THEREOF ~71:CHANGZHOU HANSOH PHARMACEUTICAL CO., LTD., 1028 Liaohe Road, Xinbei District, People's Republic of China;JIANGSU HANSOH PHARMACEUTICAL GROUP CO., LTD., Economic And Technological Development Zone, People's Republic of China;SHANGHAI HANSOH BIOMEDICAL CO., LTD., Building 11, No. 3728 Jinke Road, (Shanghai) Pilot Free Trade Zone, People's Republic of China ~72: CHEN, Chao;CHEN, Yun;DONG, Jiaqiang;WANG, Junliang;ZHOU, Tao~ 33:CN ~31:202410659337.7 ~32:24/05/2024;33:CN ~31:202410683738.6 ~32:29/05/2024;33:CN ~31:202411396359.5 ~32:30/09/2024;33:CN ~31:202510201183.1 ~32:21/02/2025

2026/10975 ~ Complete ~54:A BAIT COMPOSITION ~71:UPL LIMITED, UPL House, 610 B/2, Bandra Village, Off Western Express Highway, Bandra-East, MUMBAI 400051, MAHARASHTRA, INDIA, India ~72: DESAI, Sujata Dhondiram;KARUMURU, Bhanu Raja Madhura;Patil, Rohit Himmatrao;ZADE , Prashant Nandkumar~ 33:IN ~31:202421029778 ~32:12/04/2024

2026/10977 ~ Complete ~54:ALBUMIN BINDING PROTEINS AND METHODS OF USE ~71:PARAGON THERAPEUTICS, INC., 221 Crescent Street, Building 23, Suite 105, WALTHAM 02453, MA, USA, United States of America ~72: LIU, Yuqi;SHAHEEN, Hussam Hisham~ 33:US ~31:63/633,665 ~32:12/04/2024;33:US ~31:63/633,667 ~32:12/04/2024

2026/10948 ~ Provisional ~54:TIMTECH PATENT ~71:TimothyJabulani Mahlangu, 404 Mandela Village, South Africa ~72: TimothyJabulani Mahlangu~

2026/10950 ~ Complete ~54:A PREPARATION METHOD FOR A SALT-REDUCED AND UMAMI-ENHANCING COMPOUND SEASONING FROM RARE EDIBLE MUSHROOM BY-PRODUCTS ~71:Jinan Fruit Research Institute, All China Federation of Supply and Marketing Cooperatives, No. 24, East Road of Yanzishan Community, Lixia District, Jinan City, Shandong Province, 250100, People's Republic of China ~72: Bin Wang;Bohua Zhang;Chao Ma;Chongdui Wang;Fuxia Hu;Li Wang;Liying Ni;Maoyu Wu;Mengxue Sun;Ming Zhang;Qi Fan;Xiaofeng Meng~ 33:CN ~31:202610226715.1 ~32:26/02/2026

2026/10953 ~ Complete ~54:ANTI-ANDROGENS FOR THE TREATMENT OF NON-METASTATIC CASTRATION-RESISTANT PROSTATE CANCER ~71:ARAGON PHARMACEUTICALS, INC., 12780 El Camino Real, Suite 301, SAN DIEGO 92130, CA, USA, United States of America ~72: MOLINA, Arturo~ 33:US ~31:62/572,791 ~32:16/10/2017;33:US ~31:62/617,745 ~32:16/01/2018;33:US ~31:62/630,594 ~32:14/02/2018

2026/10954 ~ Complete ~54:WIND TURBINE INSTALLATION AND INSTALLATION METHOD OF THE WIND TURBINE INSTALLATION ~71:NORDEX ENERGY SPAIN, S.A.U., Polígono Industrial Barasoain, Parcela 2, BARASOAIN (NAVARRA) 31395, SPAIN, Spain ~72: HERNÁNDEZ JUAN, Jesús Francisco;VARELA PUGA, Fernando~ 33:EP ~31:25383573.0 ~32:30/12/2025

2026/10958 ~ Complete ~54:A TOILET FLUSH MECHANISM ~71:PRETORIUS, Robert Albertus, 3 Zebrina Crescent, West Acres, NELSPRUIT 1201, Mpumalanga, SOUTH AFRICA, South Africa ~72: PRETORIUS, Robert Albertus~ 33:ZA ~31:2025/07569 ~32:09/09/2025

2026/10966 ~ Complete ~54:COMBINATION TREATMENTS ~71:AUSPERBIO THERAPEUTICS INC., 950 Tower Lane, Suite 1075, United States of America ~72: CHENG, Guofeng;LU, Tingting;YANG, Cheng Yong~ 33:CN ~31:PCT/CN2024/094755 ~32:22/05/2024

2026/10968 ~ Complete ~54:SET FOR TREATING A BONE FRACTURE ~71:I.T.S. GMBH, AUTAL 28, 8301 LASSNITZHÖHE, AUSTRIA, Austria ~72: PRAGER, Ronald~ 33:AT ~31:GM 50048/2024 ~32:15/04/2024

2026/10969 ~ Complete ~54:SYSTEMS AND METHODS FOR A VANADIUM (II) GENERATING ELECTROLYZER ~71:STILL BRIGHT, INC., 2 CEDAR STREET, 9TH FLOOR HAX NEWARK, NEW JERSEY 07102, USA, United States of America ~72: BRAYTON, Kelly, Michelle;DICKMAN, Max;GRECO, Katharine, Virginia;IZMERY, Olivier;VARDNER, Jonathan, Thomas~ 33:US ~31:63/635,235 ~32:17/04/2024

2026/10972 ~ Complete ~54:CLOSING THE GAP ~71:TELEFONAKTIEBOLAGET LM ERICSSON (PUBL), SE-164 83, Sweden ~72: ARVIDSON, Pontus;MAX, Sebastian;PETTERSSON, Charlie~ 33:US ~31:63/654,723 ~32:31/05/2024

2026/10974 ~ Complete ~54:LIQUID-COOLED MEGAWATT-LEVEL CHARGING GUN ~71:Zhangjiagang Uchen New Energy Technology Co., Ltd, No. 999 Yongjin Road, Miaoqiao, Tangqiao Town, Zhangjiagang City, Jiangsu Province, 215615, People's Republic of China ~72: Gaojun SONG;Jiafeng DING;Jiandong WANG;Zhiping ZOU;Zizhao LU~ 33:CN ~31:2026115844975 ~32:13/10/2026

2026/10978 ~ Complete ~54:METHOD FOR INTRODUCING BLOCKS OF FOOD INTO A FOOD PROCESSING SYSTEM, AND PROCESSING LINE OR DEVICE FOR CARRYING OUT SUCH A METHOD ~71:NIENSTEDT GMBH, An der Brinkwiese 11, HALTERN AM SEE 45721, GERMANY, Germany ~72: GRONEBERG, Jan~ 33:DE ~31:10 2024 110 736.7 ~32:17/04/2024

2026/10981 ~ Complete ~54:METHOD AND SYSTEM FOR LOCAL DYNAMIC REPLACEMENT OF MULTI-STYLE MATERIALS BASED ON DIGITAL TWIN THREE-DIMENSIONAL INTERFACE, APPARATUS, AND MEDIUM ~71:BEIJING ZHUANGKU CREATIVE TECH. LTD, 7th Floor, Building 41, Zone 12, No. 188 West South Fourth Ring Road, Fengtai District, Beijing, 100071, People's Republic of China ~72: Chang YU;Jiankang YAO;Jie GAO;Keyi WANG;Zhanhai GAO~ 33:CN ~31:202611349569.8 ~32:02/09/2026

2026/10982 ~ Complete ~54:ECOLOGICAL ENVIRONMENT ASSOCIATION ANALYSIS METHOD AND SYSTEM BASED ON GRAPH NEURAL NETWORK ~71:ANQING NORMAL UNIVERSITY, No. 1318 Jixian North Road, Yixiu District, Anqing City, Anhui Province, 246052, People's Republic of China ~72: GUI Chunyan;SHU Axiu;XIE Xiaojuan~ 33:CN ~31:2025100399433 ~32:10/01/2025

2026/10947 ~ Provisional ~54:PORTABLE ENDOVASCULAR ROBOTIC SYSTEM FOR IN-SITU CEREBROVASCULAR TREATMENT AND CEREBRAL REVIVIFICATION ~71:BRADLEY KYLE DUNCAN, 18 MORGENSTER CRESCENT, South Africa ~72: BRADLEY KYLE DUNCAN~

2026/10956 ~ Complete ~54:CONTEXT-CENTRIC COMPUTING ARCHITECTURE USING AN AUTHORITATIVE SHARED CONTEXT FOR COORDINATING DISTRIBUTED COMPUTATIONAL ENGINES ~71:BRIERS, Pierre, Francois, Melchior, 125 BUITENGRAGHT CENTRE, CAPE TOWN, 8001, SOUTH AFRICA, South Africa ~72: BRIERS, Pierre, Francois, Melchior~ 33:ZA ~31:2026/06919 ~32:06/07/2026;33:ZA ~31:2026/07406 ~32:17/07/2026

2026/10959 ~ Complete ~54:ANTI-HSA VHH ANTIBODIES AND COMPOSITIONS THEREOF ~71:PARAGON THERAPEUTICS, INC., 221 Crescent Street, Building 23, Suite 105, Waltham, United States of America ~72: LIU, Yuqi;SHAHEEN, Hussam Hisham~ 33:US ~31:63/633,665 ~32:12/04/2024;33:US ~31:63/702,592 ~32:02/10/2024;33:US ~31:63/719,077 ~32:11/11/2024

2026/10976 ~ Complete ~54:ALBUMIN BINDING PROTEINS AND METHODS OF USE ~71:PARAGON THERAPEUTICS, INC., 221 Crescent Street, Building 23, Suite 105, WALTHAM 02453, MA, USA, United States of America ~72: LIU, Yuqi;SHAHEEN, Hussam Hisham~ 33:US ~31:63/633,665 ~32:12/04/2024;33:US ~31:63/702,592 ~32:02/10/2024;33:US ~31:63/719,077 ~32:11/11/2024

2026/10979 ~ Complete ~54:SYSTEMS FOR USE IN POLLINATING PLANTS, AND RELATED METHODS ~71:MONSANTO TECHNOLOGY LLC, 800 North Lindbergh Boulevard, ST. LOUIS 63167, MO, USA, United States of America ~72: BORROWMAN, Eric Lee;KAYSER, Justin Scott;STENDAL, Chad Allen~ 33:US ~31:63/651,913 ~32:24/05/2024

. - APPLIED ON 2026/11/12 -

2026/11026 ~ Complete ~54:TUMOR-TARGETED SPLIT IL12 RECEPTOR AGONISTS ~71:REGENERON PHARMACEUTICALS, INC., 777 Old Saw Mill River Road, Tarrytown, New York, 10591, United States of America ~72: CHANG, Aaron;D'ORVILLIERS , Amanda;LIN, Chia-Yang;MURPHY, Andrew J;ULLMAN, Erica;WU, Jiaxi;YANCOPOULOS, George D;ZHANG, Tong~ 33:US ~31:63/651,855 ~32:24/05/2024;33:US ~31:63/730,129 ~32:10/12/2024

2026/11022 ~ Complete ~54:EPITOPE PRESERVATION ~71:ATELERIX LIMITED, Ye Olde Hundred, Church Way, United Kingdom ~72: MARSH, Sarah;SWIOKLO, Steve~ 33:GB ~31:2405351.4 ~32:16/04/2024;33:GB ~31:2418011.9 ~32:09/12/2024

2026/11023 ~ Complete ~54:LOW-ENERGY CONSUMPTION AND LOW-EMISSION FLUIDIZED BED UREA GRANULATION SYSTEM ~71:WUHUAN ENGINEERING CO., LTD, 1019 Minzu Road (Changcheng S.T. Park), East Lake High-Tech Development Zone, People's Republic of China ~72: LI, Peiyu;PAN, Qi;SUN, Xi;WANG, Jiaoyun;XIA, Yanhua;YANG, Zhiguo;YE, Shuang;YU, Zhiwen;ZHA, Xi~ 33:CN ~31:202410927123.3 ~32:11/07/2024

2026/11028 ~ Complete ~54:PESTICIDAL COMPOSITIONS COMPRISING OXATHIAZOLIDINE DERIVATIVES AND A MIXING PARTNER ~71:CORTEVA AGRISCIENCE LLC, 9330 Zionsville Road, Indianapolis, Indiana, 46268, United States of America ~72: GIAMPIETRO, Natalie C;KIRK, Daniel;O'NEAL, Scott;RULE, Dwain M~ 33:US ~31:63/647,398 ~32:14/05/2024

2026/11018 ~ Complete ~54:FOAMING LIQUID CREAMERS FOR AEROSOL PACKAGING, AND METHODS OF MAKING AND USING SUCH FOAMING LIQUID CREAMERS AND AEROSOL PACKAGINGS ~71:SOCIÉTÉ DES PRODUITS NESTLÉ S.A., Entre-deux-Villes, VEVEY CH-1800, SWITZERLAND, Switzerland ~72: CATALINA, Vicki;FU, Jun-Tse Ray;MOZDRZECH, Lawrence;OPET, Nathan;PRESTON, Lija;WOLAK, Christopher~ 33:US ~31:63/636,308 ~32:19/04/2024

2026/11029 ~ Complete ~54:SHOWER DOOR BUFFER DEVICE AND SHOWER DOOR INCLUDING SAME ~71:IDEAL SANITARY WARE CO., LTD., Workshop II, No. 3 Hexi Road of Shashui, Yanghe Town, Gaoming District, People's Republic of China ~72: WEI, Wuxiang~

2026/10993 ~ Complete ~54:LIGHTWEIGHT METHOD AND SYSTEM FOR IDENTIFYING FIRMWARE INTEGRITY OF MULTIPLE IN-VEHICLE ELECTRONIC CONTROL UNITS ~71:Shandong Vocational College of Information Technology, No.206 East Dongfeng Street, Weifang City, Shandong Province, People's Republic of China ~72: Dai Jinfeng;Liu Zhen;Song Jinling;Wang Hao;Xu Shuaiqing;Zhang Bingting~ 33:CN ~31:2026116440023 ~32:23/10/2026

2026/11000 ~ Complete ~54:OPERATING MACHINE WITH INCREASED OPERATING EFFICIENCY ~71:MANITOU ITALIA S.R.L., Via Cristoforo Colombo 2, Castelfranco Emilia (Modena), 41013, Italy ~72: IOTTI, Marco~ 33:IT ~31:102025000034210 ~32:19/12/2025

2026/11009 ~ Complete ~54:POLYPEPTIDE AGONIST, PREPARATION METHOD THEREFOR AND PHARMACEUTICAL USE THEREOF ~71:JIANGSU HANSOH PHARMACEUTICAL GROUP CO., LTD., Economic And Technological Development Zone, People's Republic of China;SHANGHAI HANSOH BIOMEDICAL CO., LTD., Building 11, No. 3728 Jinke Road, (Shanghai) Pilot Free Trade Zone, People's Republic of China ~72: CHEN, Yun;DONG, Jiaqiang;GAO, Meina;WANG, Junliang;YU, Haizhou~ 33:CN ~31:202410659337.7 ~32:24/05/2024;33:CN ~31:202411837244.5 ~32:12/12/2024;33:CN ~31:202510201115.5 ~32:21/02/2025;33:CN ~31:202510215495.8 ~32:25/02/2025;33:CN ~31:202510444837.3 ~32:09/04/2025

2026/11013 ~ Complete ~54:FOAMING LIQUID CREAMERS FOR AEROSOL PACKAGING, AND METHODS OF MAKING AND USING SUCH FOAMING LIQUID CREAMERS AND AEROSOL PACKAGINGS ~71:SOCIÉTÉ DES PRODUITS NESTLÉ S.A., Entre-deux-Villes, VEVEY CH-1800, SWITZERLAND, Switzerland ~72: CATALINA, Vicki;FU, Jun-Tse Ray;LIN, Shinjie;MOZDRZECH, Lawrence;OPET, Nathan;PRESTON, Lija;WOLAK, Christopher~ 33:US ~31:63/636,308 ~32:19/04/2024

2026/11017 ~ Complete ~54:LARGE SCALE FIELD ERECTED AIR-COOLED INDUSTRIAL STEAM CONDENSERS AND DEVICE AND METHOD FOR REDUCING ACCUMULATION OF NON-CONDENSABLE COLD SPOTS ~71:EVAPCO, INC., 5151 Allendale Lane, TANEYTOWN 21787, MD, USA, United States of America ~72: HILDEBRANDT, Ben;HUBER, Mark;SEXTON, Wayne;STEPHENS, Randall~ 33:US ~31:63/650,610 ~32:22/05/2024

2026/11021 ~ Complete ~54:ENERGY-SAVING UREA PRODUCTION SYSTEM ~71:WUHUAN ENGINEERING CO., LTD, 1019 Minzu Road (Changcheng S.T. Park), East Lake High-Tech Development Zone, People's Republic of China ~72: LI, Peiyu;PAN, Qi;SUN, Xi;WANG, Jiaoyun;XIA, Yanhua;YANG, Zhiguo;YE, Shuang;YU, Zhiwen;ZHA, Xi~ 33:CN ~31:202410764360.2 ~32:14/06/2024

2026/10998 ~ Complete ~54:SYSTEM AND METHOD FOR HEALTHCARE SERVICE EVENT VERIFICATION AND CLAIM CORRELATION ~71:Letlhogonolo Mathe, 4468 Block B, Mabopane, South Africa ~72: Letlhogonolo Mathe~ 33:ZA ~31:2025/09688 ~32:13/11/2025;33:ZA ~31:2026/00026 ~32:05/01/2026

2026/11006 ~ Complete ~54:WIRELESS COMMUNICATION METHOD, AP AND DEVICE ~71:RUIJIE NETWORKS CO., LTD., Building 19, Juyuanzhou Industrial Park, No. 618 Jinshan Road, People's Republic of China ~72: CHE, Hui~ 33:CN ~31:202411169966.8 ~32:23/08/2024

2026/11129 ~ Provisional ~54:MODULAR ANTI-THEFT INTEGRATED KERB DRAINAGE SYSTEM-BEAMS,FRAMES,COVERS AND GRIDS FOR DRAINS. ~71:STIRLING RAY ABRAHAMS, 9 STRANDLOPER SINGLE. PAARDEVLEI SOMERSET WEST,, South Africa ~72: STIRLING RAY ABRAHAMS~

2026/10989 ~ Complete ~54:PREMIXED PURPLE GLUTINOUS RICE NOODLE YOGURT AND PREPARATION METHOD THEREFOR ~71:Chengdu Academy of Agriculture and Forestry Sciences, No. 200 Nongke Road, Wenjiang District, Chengdu City, Sichuan Province, 611130, People's Republic of China ~72: DI, Feida;FANG, Qiuye;FU, Shaohong;LEI, Chunlong;LI, Siyan;LIU, Yijing;SUI, Liyun;TU, Jie;WANG, Peng~ 33:CN ~31:202611407602.8 ~32:10/09/2026

2026/10999 ~ Complete ~54:OPERATING MACHINE PROVIDED WITH A TELESCOPIC OPERATING BOOM ~71:MANITOU ITALIA S.R.L., Via Cristoforo Colombo 2, Castelfranco Emilia (Modena), 41013, Italy ~72: IOTTI, Marco~ 33:IT ~31:102025000034279 ~32:19/12/2025

2026/11007 ~ Complete ~54:SHOWER DOOR ASSEMBLY AND SHOWER DOOR INCLUDING SAME ~71:IDEAL SANITARY WARE CO., LTD., Workshop II, No. 3 Hexi Road of Shashui, Yanghe Town, Gaoming District, People's Republic of China ~72: WEI, Wuxiang~

2026/11001 ~ Complete ~54:MICRODOT ENCAPSULATION SYSTEM AND ASSEMBLY METHOD ~71:HOLOMATRIX (PTY) LTD, 17 Grasmere Street, Windermere, South Africa ~72: PETERSON, Kevin;STRYDOM, Marc~

2026/11003 ~ Complete ~54:NOVEL HYPERICUM COATED NANOPARTICLE, METHOD AND KIT FOR DIAGNOSIS AND PROGNOSIS OF CANCER ~71:STILVI LAB, Posidonos Avenue 18, Greece ~72: ARMAKOLAS, Athanasios;GKOUSIS, Anastasios;PAPADOPOULOU, Despoina~ 33:GR ~31:20240100499 ~32:16/07/2024

2026/11005 ~ Complete ~54:SHOWER DOOR ASSEMBLY AND SHOWER DOOR COMPRISING SAME ~71:IDEAL SANITARY WARE CO., LTD., Workshop II, No. 3 Hexi Road of Shashui, Yanghe Town, Gaoming District, People's Republic of China ~72: WEI, Wuxiang~

2026/11008 ~ Complete ~54:IMMUNOLOGICALLY ACTIVE SAPONIN FRACTIONS AND ADJUVANT FORMULATIONS ~71:DESERT KING INTERNATIONAL LLC, 745 Main Street, Ste A., United States of America;VACCINE FORMULATION INSTITUTE CH LTD., Rue du Champ-Blanchod 4, Switzerland ~72: BASILIO ARENAS, Paola;COLLIN, Nicolas;COURANT, Thomas;DUBOIS, Patrice;PADILLA IGLESIAS, Leandro;VAN MECHELEN, Marcelle, Paulette;VENTURA, Roland~ 33:EP ~31:24174946.4 ~32:08/05/2024

2026/11012 ~ Complete ~54:CD3 BINDING PROTEINS, NUCLEIC ACIDS ENCODING SUCH PROTEINS, AND METHODS FOR THE PREPARATION AND USE THEREOF ~71:CARTOGRAPHY BIOSCIENCES, INC., 230 EAST GRAND AVENUE, SUITE 250, SOUTH SAN FRANCISCO, CALIFORNIA 94080, USA, United States of America ~72: KUGLER, David, Geoffrey;MARTINKO, Alexander, John;MATHIEU, Mary;PALURU, Prasuna;YIGIT, Burcu~ 33:US ~31:63/636,680 ~32:19/04/2024

2026/11015 ~ Complete ~54:SALT FORMS OF BIS(3-(2-(DIMETHYLAMINO)ETHYL)-1H-INDOL-4-YL) 3,3'-OXYDIPROPIONATE ~71:COMPASS PATHFINDER LIMITED, 3rd Floor, 1 Ashley Road, ALTRINCHAM WA14 2DT, CHESHIRE, UNITED KINGDOM, United Kingdom ~72: BURY, Paul Stanley;HINCHLIFFE, Paul Stuart;MORPHY, John Richard;OSBOURN, Susan Elizabeth;WAGSTAFF, Niall Anthony~ 33:US ~31:63/649,108 ~32:17/05/2024;33:US ~31:63/761,491 ~32:21/02/2025

2026/11020 ~ Complete ~54:REGISTRATION AND TRACKING SYSTEM AND METHODS OF USE ~71:SCARSELLI, Bruno, 580 Fifth Avenue, Suite 1518, United States of America ~72: SCARSELLI, Bruno~ 33:US ~31:63/647,853 ~32:15/05/2024

2026/11024 ~ Complete ~54:PROCESS FOR SEPARATING HIGH BOILERS FROM POLYAMIDE 6 DEPOLYMERIZATION MIXTURES ~71:BASF SE, Carl-Bosch-Strasse 38, 67056, Ludwigshafen am Rhein, Germany ~72: BLEI, Stefan;EL-TOUFAILI, Faissal-Ali;RAVIKUMAR, Vikram~ 33:EP ~31:24176092.5 ~32:15/05/2024

2026/10990 ~ Complete ~54:LIMB FIXATION DEVICE FOR RADIOLOGY EXAMINATION ~71:Sanya Second People's Hospital, Yuhong Village, Jiyang District, Sanya City, Hainan Province, People's Republic of China ~72: Xue Wang;Ying Zou~

2026/10992 ~ Complete ~54:A LONG-ACTING FUSION PROTEIN OF FIBROBLAST GROWTH FACTOR 21 AND USE THEREOF ~71:NATIONAL ENGINEERING RESEARCH CENTER FOR CELL GROWTH FACTOR DRUGS AND PROTEIN BIOLOGICS OF WENZHOU MEDICAL UNIVERSITY, 10th-11th Floor, South Building, Biomedical Research Building, Wenzhou Medical University, Chashan Higher Education Park, Ouhai District, People's Republic of China ~72: FENG, Ya;LI, Xiaokun;LI, Zhaoyu;LIN, Li;SU, Zhijian~ 33:CN ~31:2025118691553 ~32:11/12/2025

2026/10994 ~ Complete ~54:METHOD FOR THE PREPARATION OF (4S)-4-(4-CYANO-2-METHOXYPHENYL)-5-ETHOXY-2,8-DIMETHYL-1,4-DIHYDRO-1-6-NAPHTHYRIDINE-3-CARBOX-AMIDE AND THE PURIFICATION THEREOF FOR USE AS AN ACTIVE PHARMACEUTICAL INGREDIENT ~71:BAYER PHARMA AKTIENGESELLSCHAFT, Müllerstrasse 178, BERLIN 13353, GERMANY, Germany ~72: GARKE, Gunnar;GRUNENBERG, Alfons;PLATZEK, Johannes~ 33:EP ~31:14179544.3 ~32:01/08/2014

2026/10997 ~ Complete ~54:ENERGY STORAGE ~71:HAMILTON, Natalia, 28 Heuningbos Street, South Africa;HAMILTON, Peter Gordon, 28 Heuningbos Street, South Africa ~72: HAMILTON, Peter Gordon~ 33:US ~31:63/922,487 ~32:21/11/2025

2026/11004 ~ Complete ~54:COMBINATION ADMINISTRATION THERAPY OF POSELTINIB FOR PREVENTING OR TREATING LYMPHOMA ~71:HANMI PHARM. CO., LTD., 214, Muha-ro, Paltan-myeon, Republic of Korea;NOBO MEDICINE INC., 720-ho, 721-ho, 722-ho, 1-dong, 48, Achasan-ro 17-gil, Republic of

Korea ~72: AHN, Young Gil;JANG, Sun Young;KIM, Yu Yon;KOH, Youngil;LEE, Myung Sea;SONG, Tae Hun~ 33:KR ~31:10-2024-0071638 ~32:31/05/2024;33:KR ~31:10-2024-0071639 ~32:31/05/2024

2026/11010 ~ Complete ~54:VERTICAL COMBINED UREA SYNTHESIS REACTOR AND SYSTEM COMPRISING SAME ~71:WUHUAN ENGINEERING CO., LTD, 1019 Minzu Road (Changcheng S.T. Park), East Lake High-Tech Development Zone, People's Republic of China ~72: LI, Peiyu;PAN, Qi;SUN, Xi;WANG, Jiaoyun;XIA, Yanhua;YANG, Zhiguo;YE, Shuang;YU, Zhiwen;ZHA, Xi~ 33:CN ~31:202410764347.7 ~32:14/06/2024

2026/11011 ~ Complete ~54:DEVICE FOR FASTENING A VERTICALLY ALIGNED RAILING PANEL BY WEDGING BETWEEN THE INNER WALLS OF THE GUIDE CHANNEL OF A FLOOR SUPPORT PROFILE ~71:ONLEVEL HOLDING BV, Heilige Huisjes 8, Netherlands ~72: OUDE LUTTIKHUIS, Iwan~ 33:DE ~31:20 2024 103 142.3 ~32:12/06/2024

2026/11014 ~ Complete ~54:METHOD AND DEVICE FOR MANUFACTURING AN EMBOSSED SHEET OF SUBSTRATE TO PRODUCE A CONTROLLED THICKNESS VALUE AND A REDUCED CONTENT OF CLUSTERS ~71:BOEGLI-GRAVURES SA, Rue de la Gare 24-26, MARIN-EPAGNIER 2074, SWITZERLAND, Switzerland ~72: BOEGLI, Charles;DUMITRU, Gabriel~ 33:IB ~31:PCT/IB2024/057175 ~32:24/07/2024

2026/11016 ~ Complete ~54:METHOD FOR CONTROLLING INSECT PESTS WITH BEAUVERIA BASSIANA ~71:UPL MAURITIUS LIMITED, 6th Floor, Suite 157B, Harbor Front Building, President John Kennedy Street, PORT LOUIS, MAURITIUS, Mauritius ~72: BESSE, Samantha;D'INNOCENZO, Sébastien;LECOLLINET, Grégory;LÓPEZ, David Roldán;TAYLOR, Miles~ 33:EP ~31:24305861.7 ~32:31/05/2024

2026/11019 ~ Complete ~54:ACTUATOR NOZZLE FOR AEROSOL PACKAGING, AND METHODS OF MAKING AND USING SUCH ACTUATOR NOZZLES AND AEROSOL PACKAGINGS ~71:SOCIÉTÉ DES PRODUITS NESTLÉ S.A., Entre-deux-Villes, VEVEY CH-1800, SWITZERLAND, Switzerland ~72: CATALINA, Vicki;FU, Jun-Tse Ray;MOZDRZECH, Lawrence;OPET, Nathan;PRESTON, Lija;WOLAK, Christopher~ 33:US ~31:63/636,308 ~32:19/04/2024

2026/11025 ~ Complete ~54:FGFR3 BINDING MOLECULES AND METHODS OF USE THEREOF ~71:REGENERON PHARMACEUTICALS, INC., 777 Old Saw Mill River Road, Tarrytown, New York, 10591, United States of America ~72: AVVARU, Naga Suhasini;LIN, Chia-Yang;SHEN, Yang;YANG, Yan~ 33:US ~31:63/646,236 ~32:13/05/2024

2026/11027 ~ Complete ~54:AGROCHEMICAL FORMULATIONS COMPRISING A PESTICIDALLY-ACTIVE OXATHIAZOLIDINE COMPOUND ~71:CORTEVA AGRISCIENCE LLC, 9330 Zionsville Road, Indianapolis, Indiana, 46268, United States of America ~72: ESSON, Moira;GIAMPIETRO, Natalie C;HAN, Hui;MEZEI, Imre;MIN, Ke;O'NEAL, Scott;RULE, Dwain M;WEI, Bin~ 33:US ~31:63/651,161 ~32:23/05/2024

2026/10984 ~ Provisional ~54:INHALATION MASK AND ACTUATOR ASSEMBLY AND PORTABLE RESPIRATORY APPARATUS COMPRISING SAME ~71:NATHAN, Michael, David, 95 - 97 ADMIRALITY PARK KYALAMI DRIVE KILLARNEY GARDENS CAPE TOWN , SOUTH AFRICA, South Africa ~72: NATHAN, Michael, David~

2026/10991 ~ Complete ~54:A BACILLUS THURINGIENSIS FOR CONTROLLING SPODOPTERA FRUGIPERDA AND/OR PHTHORIMAEA OPERCULELLA ~71:INSTITUTE OF PLANT PROTECTION, CHINESE ACADEMY OF AGRICULTURAL SCIENCES, No. 2 Yuanmingyuan West Road, Haidian District, People's Republic of China ~72: GAO, Yulin;GENG, Lili;HASSEN, Ahmed Idris;HE, Zirong;PENG, Qi;SHU, Changlong;WANG, Zeyu;ZHANG, Jie~ 33:CN ~31:2026112813176 ~32:21/08/2026

2026/10995 ~ Complete ~54:IMPROVED COMPUTER-IMPLEMENTED SYSTEMS AND METHODS FOR SECURE ELECTRONIC TRANSFERS ~71:BURBANK SOFTWARE LTD, 20 Wenlock Road, LONDON N1 7GU, ENGLAND, UNITED KINGDOM, United Kingdom ~72: PIKE, Justin;WATTS, Dave~ 33:GB ~31:2316490.8 ~32:27/10/2023

2026/10985 ~ Provisional ~54:DUST CONTAINMENT ENCLOSURE FOR A CONVEYOR ~71:SLP HOLDINGS INCORPORATED, 6S270 DENSMORE ROAD, AURORA, United States of America ~72: LULEWICZ, TIMOTHY RICHARD~

2026/10986 ~ Provisional ~54:CONTROL BOARD ~71:Morotoba Bendly Mahuma, 1 Wilcox Street, South Africa;Naylen Henry Goliath, 1 Wilcox Street, South Africa ~72: Morotoba Bendly Mahuma;Naylen Henry Goliath~

2026/10987 ~ Provisional ~54:ONLINE BCP ~71:Glen Khan, 13B Medborn Crescent, South Africa ~72: Glen Khan~

2026/10996 ~ Complete ~54:SYSTEM AND METHOD FOR PROCESSING TRANSACTION DATA ~71:Landlord Check (Pty) Limited, 17 Donnington Close, Parklands, South Africa ~72: MALLY, Liam Hugh;MALLY, Vernon Hugh~

2026/11002 ~ Complete ~54:AZA-TRICYCLIC DERIVATIVE, AND PREPARATION METHOD THEREFOR AND USE THEREOF ~71:SHANGHAI ARYL PHARMTECH CO., LTD., Building 3, 301 Minqiang Road, Songjiang District, People's Republic of China;ZHEJIANG HISUN PHARMACEUTICAL CO., LTD., No. 46 Waisha Road, Jiaojiang District, Taizhou, People's Republic of China ~72: CAO, Qi;GUO, Chenli;MAO, Lifei;MENG, Lichen;WANG, Xin;XU, Xiaojie;YE, Cheng;YU, Mingfeng;ZENG, Xiaohua;ZHANG, Panpan;ZHENG, Xiaohe;ZHOU, Houjiang~ 33:CN ~31:202410651957.6 ~32:24/05/2024;33:CN ~31:202510111452.5 ~32:23/01/2025

. - APPLIED ON 2026/11/13 -

2026/11067 ~ Complete ~54:TOWER SOLAR HEAT UTILIZATION SYSTEM ~71:COSIN SOLAR TECHNOLOGY CO., LTD., 20th Floor, Building 3, No. 118 Xinke Street, Baiyang Subdistrict, Qiantang District, Hangzhou, Zhejiang 310018, People's Republic of China ~72: LI, Fen;MI, Xiaoling;TANG, Juan;TANG, Yaping;XU, Neng;YU, Zhiyong~ 33:CN ~31:202410529265.4 ~32:29/04/2024

2026/11044 ~ Complete ~54:QUINOLONE DERIVED COMPOUNDS FOR CANCER TREATMENT ~71:GENOME THERAPEUTICS LTD, Regent House 316, Beulah Hill, London, SE19 3HF, United Kingdom ~72: BALASUBRAMANIAN, Shankar;MEO, Paul~ 33:GB ~31:2407455.1 ~32:24/05/2024;33:GB ~31:2417511.9 ~32:28/11/2024

2026/11034 ~ Provisional ~54:SYSTEM AND METHOD FOR REAL-TIME VERIFICATION OF THE AUTHORITY OF FIELD PERSONNEL TO MEMBERS OF THE PUBLIC. ~71:Eezyverify (Pty) Ltd, 1594 Lords Street, Dainfern, South Africa ~72: Eezyverify (Pty) Ltd~

2026/11037 ~ Complete ~54:LOGISTICS TRANSPORT ELECTRIC DRIVE ROBOT ~71:GUIZHOU UNIVERSITY, NO.2708 Huaxi Avenue South, Huaxi District, Guiyang City, Guizhou Province, 550025, People's Republic of China ~72: LIN Li;YANG Mingqing~

2026/11038 ~ Complete ~54:REINFORCED CONCRETE BUILDING BLOCK ~71:JUANRUE CRONJE INVESTMENTS (PTY) LTD, 59 Durmonte Street, Durmonte, South Africa ~72: CRONJE, Juanrue~ 33:ZA ~31:2025/10630 ~32:10/12/2025

2026/11042 ~ Complete ~54:TREATMENT OF A LIVER DISEASE IN PATIENTS WITH HEPATIC IMPAIRMENT ~71:INVENTIVA, 50 rue de Dijon, 21121, Daix, France ~72: AUBERT, Nicolas Thomas;PATEL, Sanjaykumar~ 33:EP ~31:24305776.7 ~32:17/05/2024

2026/11047 ~ Complete ~54:THREAD PROFILE WITH TILTED ROOTS ~71:SANDVIK MINING AND CONSTRUCTION TOOLS AB, Valsverksstråket 14, SANDVIKEN 81134, SWEDEN, Sweden ~72: LARSSON, Martin;NORDBERG, Anders~ 33:EP ~31:24175917.4 ~32:15/05/2024

2026/11054 ~ Complete ~54:MINING AUTOMATION SYSTEM OPERATION ZONE CONTROL ~71:SANDVIK MINING AND CONSTRUCTION OY, Pihtisulunkatu 9, TAMPERE 33330, FINLAND, Finland ~72: HÄRKÖNEN, Teemu;KOPPANEN, Jouni;LEHTONEN, Aleksi;SILVENTOINEN, Marko~ 33:EP ~31:24176287.1 ~32:16/05/2024

2026/11066 ~ Complete ~54:TOWER-TYPE SOLAR HEAT UTILIZATION SYSTEM ~71:COSIN SOLAR TECHNOLOGY CO., LTD., 20th Floor, Building 3, No. 118 Xinke Street, Baiyang Subdistrict, Qiantang District, Hangzhou, Zhejiang 310018, People's Republic of China ~72: BI, Wenjian;MI, Xiaoling;TANG, Yaping;TONG, Guokai;XU, Neng;YU, Zhiyong~ 33:CN ~31:202410529254.6 ~32:29/04/2024

2026/11036 ~ Complete ~54:MARTIAL ARTS ACTION CORRECTION METHOD BASED ON THREE-DIMENSIONAL HUMAN POSE ESTIMATION ~71:Leshan Normal University, No. 778 Binhe Road, Shizhong District, Leshan City, Sichuan Province, People's Republic of China ~72: Jiaojiao Hu;Ling Li;Manman Shi;Shengnan Ran~

2026/11051 ~ Complete ~54:A METHOD FOR TREATING RETINAL AND CHOROIDAL VASCULAR DISEASES WITH A CHIMERIC MOLECULE ~71:JIANGSU AOSAIKANG PHARMACEUTICAL CO., LTD., 699 Kejian Road, Jiangning Science Park, NANJING 211112, CHINA (P.R.C.), People's Republic of China;VISARA, INC., 1209 Orange Street, WILMINGTON 19801, DE, USA, United States of America ~72: LI, Lu;LI, Ming;LU, Jian-Feng;LU, Yuefeng;MA, Fiona;MA, Yutao;XIA, Yusong;ZHANG, Xiaozhe~ 33:IB ~31:2024/093176 ~32:14/05/2024

2026/11056 ~ Complete ~54:HIGH-PRESSURE ROLLER PRESS HAVING TWO IDLE ROLLERS ~71:KHD HUMBOLDT WEDAG GMBH, Von-der-Wettern-Straße 4a, KÖLN 51149, GERMANY, Germany ~72: HACHENBERG, Niko;KNOCH, Alexander~ 33:DE ~31:10 2024 113 718.5 ~32:16/05/2024

2026/11057 ~ Complete ~54:CYCLONIC LANTERN RING FOR SLURRY PUMPS ~71:FLSMIDTH A/S, Vigerslev Alle 77, VALBY 2500, DENMARK, Denmark ~72: ECHEVERRI, Luis Fernando~ 33:US ~31:63/647,809 ~32:15/05/2024

2026/11046 ~ Complete ~54:TREATMENT METHODS COMPRISING ADMINISTRATION OF MODIFIED CD154 ANTIBODIES ~71:TONIX PHARMA LIMITED, 3 Marine Road, Dun Laoghaire, Dublin, A96 HW25, Ireland ~72: DAUGHERTY, Bruce;LEDERMAN, Seth~ 33:US ~31:63/654,530 ~32:31/05/2024;33:US ~31:63/754,414 ~32:05/02/2025;33:US ~31:63/758,933 ~32:14/02/2025

2026/11053 ~ Complete ~54:BLOCK CANDIDATES FOR INTRA TEMPLATE MATCH PREDICTION ~71:KONINKLIJKE PHILIPS N.V., High Tech Campus 34, EINDHOVEN 5656 AE, THE NETHERLANDS, Netherlands ~72: COLL, Damian Ruiz;LEE, Jung Kyung~ 33:US ~31:63/634,773 ~32:16/04/2024;33:US ~31:63/644,640 ~32:09/05/2024

2026/11062 ~ Complete ~54:CHARGING SYSTEM FOR CHARGING AT LEAST ONE CHARGING HOLE ~71:NORMET OY, Ahmolantie 6, Finland ~72: MÄÄTTÄ, Kalle;PUUMALAINEN, Harri~ 33:FI ~31:20245485 ~32:17/04/2024

2026/11120 ~ Provisional ~54:POLY-STANDARD GOVERNANCE ORCHESTRATION SYSTEM ~71:Lucky Setlabo Modiba, 7 Comanche Street, South Africa ~72: Lucky Setlabo Modiba~

2026/11035 ~ Provisional ~54:ATMOSPHERIC SPONGE ALFA ~71:Mikateko Elia Mlambo, 160 firelilly crescent, South Africa ~72: Mikateko Elia Mlambo~

2026/11119 ~ Provisional ~54:NEURAL MODEL TELEMETRY AND GOVERNANCE SYSTEM ~71:Lucky Setlabo Modiba, 7 Comanche, South Africa ~72: Lucky Setlabo Modiba~

2026/11040 ~ Complete ~54:METHODS OF TREATING MULTIPLE MYELOMA WITH BISPECIFIC BCMA X CD3 ANTIBODIES ~71:REGENERON PHARMACEUTICALS, INC., 777 Old Saw Mill River Road, Tarrytown, United States of America ~72: KROOG, Glenn~ 33:US ~31:63/649,879 ~32:20/05/2024

2026/11043 ~ Complete ~54:SYSTEM FOR INHIBITING ACTION POTENTIAL CONDUCTION IN A NERVE ~71:MERCK PATENT GMBH, Frankfurter Strasse 250, 64293, Darmstadt, Germany ~72: SCHNEIDER, Armin;SCHUMACHER, Christian Alexander~ 33:EP ~31:24170565.6 ~32:16/04/2024

2026/11064 ~ Complete ~54:SYSTEM FOR ROTATABLY DRIVING AND LOCKING PANELS ~71:CEP-IP LTD, Wellington House, East Road, Cambridge, United Kingdom ~72: GRANT, Thomas McGregor James~ 33:EP ~31:24382396.0 ~32:16/04/2024

2026/11068 ~ Complete ~54:TOWER-TYPE SOLAR THERMAL UTILIZATION SYSTEM ~71:COSIN SOLAR TECHNOLOGY CO., LTD, 20th Floor, Building 3, No. 118 Xinke Street, Baiyang Subdistrict, Qiantang District, Hangzhou, Zhejiang 310018, People's Republic of China ~72: BI, Wenjian;MI, Xiaoling;TANG, Yaping;TONG, Guokai;XU, Neng;YU, Zhiyong~ 33:CN ~31:202410530575.8 ~32:29/04/2024

2026/11055 ~ Complete ~54:LTBR BINDING MOLECULES AND USES THEREOF ~71:AGNI BIO, INC., 628 Middlefield Rd., PALO ALTO 94303, CA, USA, United States of America;JANSSEN BIOTECH, INC., 800/850 Ridgeview Drive, HORSHAM 19044, PA, USA, United States of America ~72: GREWAL, Iqbal S.;HARVILLA, Paul;KLUPSCH, Kristina;KOZLYUK, Natalia;LORENZI, Matthew Vincent;OBERMAJER, Nataša;VAN BRUGGEN, Laura;VANGENECHTEN, Laura;ZHOU, Bo;ZWOLAK, Adam~ 33:US ~31:63/634,038 ~32:15/04/2024

2026/11059 ~ Complete ~54:MODIFIED ANTISENSE OLIGONUCLEOTIDES FOR TREATING HEPATITIS B VIRUS ~71:ALIGOS THERAPEUTICS, INC., 1 Corporate Drive, 2nd Floor, SOUTH SAN FRANCISCO 94080, CA, USA, United States of America ~72: AHMED-BELKACEM, Rostom;BEIGELMAN, Leonid;BHATTACHARYA, Aneerban;HONG, Jin;PASSOW, Kellan;RAJWANSHI, Vivek K.;SMITH, David B.;SOUSA, Jacquelyn;STOYCHEVA, Antitsa~ 33:US ~31:63/647,238 ~32:14/05/2024;33:US ~31:63/727,158 ~32:02/12/2024

2026/11060 ~ Complete ~54:ELECTRICAL SYSTEM, MINING OR TUNNELLING MACHINE AND METHOD OF OPERATING AN ELECTRICAL SYSTEM ~71:NORMET OY, Ahmolantie 6, Finland ~72: KUKKONEN, Samu;LAUKKANEN, Mikko;ULMANEN, Kari~ 33:FI ~31:20245476 ~32:16/04/2024

2026/11065 ~ Complete ~54:TOWER-TYPE SOLAR THERMAL UTILIZATION SYSTEM ~71:COSIN SOLAR TECHNOLOGY CO., LTD., 20th Floor, Building 3, No. 118 Xinke Street, Baiyang Subdistrict, Qiantang District, Hangzhou, Zhejiang 310018, People's Republic of China ~72: LI, Fen;MI, Xiaoling;TANG, Juan;TANG, Yaping;XU, Neng;YU, Zhiyong~ 33:CN ~31:202410529268.8 ~32:29/04/2024

2026/11032 ~ Provisional ~54:4DIRECTIONS-ROOMS ~71:BalckenMaleboho, Firlands Minor Rd, Admirals Park,, South Africa ~72: BalckenMaleboho~

2026/11030 ~ Provisional ~54:MICRO FIBRE ROBOTIC SYSTEM HAVING LASER-DRIVEN ACTUATORS, EFFECTORS AND SENSORS INTEGRATED IN THE FIBRE ~71:BRADLEY KYLE DUNCAN, 18 MORGENSTER CRESCENT, South Africa ~72: BRADLEY KYLE DUNCAN~

2026/11031 ~ Provisional ~54:COMPUTER IMPLEMENTED SYSTEM FOR TRACKING AND ESCALATING PUBLIC SERVICE DELIVERY QUERIES. ~71:Sonwabo Mlungu, 160 Smallville Mews, South Africa;Sonwabo Thobani Mlungu, 160 Smallville Mews, South Africa ~72: Sonwabo Thobani Mlungu~

2026/11033 ~ Provisional ~54:PRESSURE SENSOR ARRAY ~71:AZOTEQ HOLDINGS LIMITED, c/o Spyrou Kyprianou Avenue 20, Chapo Central,, Cyprus ~72: BRUWER, Frederick Johannes;RADEMEYER, Daniel Barend;WOLMARANS, Wikus~

2026/11045 ~ Complete ~54:CRYSTALLINE FORMS OF AN ALC1 INHIBITOR USEFUL IN THE TREATMENT OF CANCER ~71:EISBACH BIO GMBH, Am Klopferspitz 19, 82152, Martinsried, Germany ~72: MENZER, William M~ 33:EP ~31:24177138.5 ~32:21/05/2024

2026/11049 ~ Complete ~54:APPARATUS FOR DEHYDROCHLORINATION OF CHLORINATED ALKANES ~71:THYSSENKRUPP UHDE GMBH, Friedrich-Uhde-Str. 15, DORTMUND 44141, GERMANY, Germany ~72: BENJE, Michael;KAMMERHOFER, Peter;KREJCI, Klaus~ 33:LU ~31:LU507226 ~32:15/05/2024;33:DE ~31:10 2024 204 533.0 ~32:16/05/2024

2026/11050 ~ Complete ~54:CRYSTALLINE FORMS OF KRAS G12D INHIBITOR AND USES THEREOF ~71:RANOK THERAPEUTICS (HANGZHOU) CO. LTD., Suite 1005, Building 1, 501 2nd Avenue, Hangzhou Eco-Tech, Development Area, HANGZHOU 310000, CHINA (P.R.C.), People's Republic of China ~72: DU, Feng;LV, Chunyang;WANG, Guoqiang;YE, Long;YING, Chenghao;YING, Weiwen~ 33:IB ~31:2024/093436 ~32:15/05/2024

2026/11048 ~ Complete ~54:TILTED ELLIPSE THREAD BOTTOM ~71:SANDVIK MINING AND CONSTRUCTION TOOLS AB, Valsverksstråket 14, SANDVIKEN 811 34, SWEDEN, Sweden ~72: LARSSON, Martin;NORDBERG, Anders~ 33:EP ~31:24175918.2 ~32:15/05/2024

2026/11052 ~ Complete ~54:CONJUGATES COMPRISING IGA PROTEASE OR VARIANTS THEREOF AND A POLYETHYLENE GLYCOL MOIETY, AND USES THEREOF ~71:ALEBUND PHARMACEUTICALS (HONG KONG) LIMITED, 1/F., No. 50 Tai Wan New Village, Yung Shue Wan, LAMMA ISLAND , HONG KONG, CHINA (P.R.C.), People's Republic of China ~72: PAN, Yi;SHU, Chutian;ZHU, Yuan~ 33:IB ~31:2024/093512 ~32:15/05/2024;33:CN ~31:202510619229.1 ~32:13/05/2025

2026/11058 ~ Complete ~54:MODIFIED ANTIBODIES AND IMMUNOGLOBULIN FORMATS ~71:EMD SERONO, INC., 200 Pier 4 Boulevard, BOSTON 02210, MA, USA, United States of America ~72: BRODKIN, Heather R.;CAFARELLI, Tiziana;HICKLIN, Daniel J.;SALMERON-GARCIA, Jose Andres;WINSTON, William~ 33:US ~31:63/647,999 ~32:15/05/2024;33:US ~31:63/699,332 ~32:26/09/2024;33:US ~31:63/738,027 ~32:23/12/2024;33:US ~31:63/753,145 ~32:03/02/2025;33:US ~31:63/782,772 ~32:03/04/2025

2026/11061 ~ Complete ~54:METHODS TO INCREASE TRANSDUCTION OF EPENDYMA CELLS IN BRAIN ~71:THE CHILDREN'S HOSPITAL OF PHILADELPHIA, 3401 Civic Center Boulevard, United States of America ~72: DAVIDSON, Beverly;TECEDOR, Luis~ 33:US ~31:63/641,689 ~32:02/05/2024

2026/11063 ~ Complete ~54:METHOD FOR PREDICTING A FUTURE HEALTH STATUS OF A PATIENT ~71:BITS2BEAT, 185 Boulevard Maréchal Leclerc, France ~72: ATTUEL, Guillaume~ 33:FR ~31:FR2406551 ~32:19/06/2024

2026/11039 ~ Complete ~54:COMPOSITIONS AND METHODS FOR AFFECTING WEIGHT LOSS, WEIGHT MANAGEMENT, SEXUAL DISORDERS, WELL-BEING, SELF-ESTEEM, AND/OR SELF-CONFIDENCE ~71:S1 BIOPHARMA, INC., 1077 River Rd., #95 Washington Crossing, United States of America ~72: KAUFMANN, John F.;PYKE, Robert E.;SITCHON, Nicolas G.~ 33:US ~31:63/650,042 ~32:21/05/2024;33:US ~31:63/650,164 ~32:21/05/2024

2026/11041 ~ Complete ~54:METHODS AND COMPOSITIONS FOR TREATING SEXUAL DISORDER, WEIGHT LOSS, WEIGHT MAINTENANCE, WELL-BEING, AND SELF-ESTEEM ~71:S1 BIOPHARMA, INC., 1077 River Rd., #95 Washington Crossing, United States of America ~72: SITCHON, Nicolas G.~ 33:US ~31:63/650,042 ~32:21/05/2024;33:US ~31:63/650,164 ~32:21/05/2024

. - APPLIED ON 2026/11/16 -

2026/11090 ~ Complete ~54:NON-CONTACT SENSING-ACTUATING COMPOSITE MATERIAL AND PREPARATION METHOD THEREOF ~71:SHENZHEN INSTITUTES OF ADVANCED TECHNOLOGY CHINESE ACADEMY OF SCIENCES, 1068 , Xueyuan Avenue, Shenzhen University Town, Nanshan District, Shenzhen, 518055, People's Republic of China ~72: Guanglin LI;Jiasheng QIAN;Jiaxin HUANG;Qingsong LI;Ru XIA;Shanshan ZHU;Xiaomeng ZHOU;Xu YONG;Yanlong TAI;Yuanyuan HOU~

2026/11078 ~ Complete ~54:METHODS OF INHIBITING FREE MOVEMENT OF ANIMALS ~71:Rouxcel Technology (Pty) Ltd, 17 Quantum Street, Techno Park, South Africa ~72: LE ROUX, Solomon Petrus~ 33:ZA ~31:2025/10079 ~32:26/11/2025

2026/11094 ~ Complete ~54:METHOD OF TREATING CANCER USING PEGYLATED BOVINE HEMOGLOBIN ~71:PROLONG PHARMACEUTICALS, LLC, 300 Corporate Court, Suite B, SOUTH PLAINVIEW 07080, NJ, USA, United States of America ~72: JUBIN, Ronald~ 33:US ~31:63/635,102 ~32:17/04/2024

2026/11070 ~ Provisional ~54:ENERGY SUPER CHARGED ELECTROMAGNETIC WAVES FOR NUCLEAR POWER ~71:Segodi Johannes Ngwaketsi Thobejane, Stand Number 10141, South Africa ~72: Segodi Johannes Ngwaketsi Thobejane~

2026/11083 ~ Complete ~54:PROCESS FOR PREPARING NAMODENOSON ~71:CAN-FITE BIOPHARMA LTD., 10 Bareket street, Kiryat Matalon, Israel ~72: KUANGCHU, Dai;YU, Xiang Yang~ 33:CN ~31:202410694469.3 ~32:31/05/2024

2026/11088 ~ Complete ~54:INSTRUCTION TO ACCELERATE HASH-BASED MESSAGE AUTHENTICATION CODE PROCESSING ~71:INTERNATIONAL BUSINESS MACHINES CORPORATION, New Orchard Road, Armonk, United States of America ~72: BHATTACHARJEE, Deepankar;BRADBURY, Jonathan;BUENDGEN, Reinhard;GOMES, Louis;RAO, Rajat;SANDEEP, Gunturi~ 33:US ~31:18/756,414 ~32:27/06/2024

2026/11100 ~ Complete ~54:ANTI-ACTRII ANTIBODIES AND USES THEREOF ~71:INVETX, INC., One Boston Place, 201 Washington Street, Suite 3930, Boston, Massachusetts, 02108, United States of America ~72: BRONDYK, William;HORN, Juergen;SEVIGNY, Leila~ 33:US ~31:63/651,541 ~32:24/05/2024;33:US ~31:63/692,313 ~32:09/09/2024

2026/11069 ~ Provisional ~54:METHODS AND SYSTEMS FOR MANAGING PROJECT COMPLETION ~71:EXPERT GLOBAL CONSULTING AGENCY (PTY) LTD, Umhlanga Ave, Paulshof, 1st Floor, Glenfiddich B8, Kildrummy Office Park, South Africa ~72: KONGOLO, Odilon~

2026/11074 ~ Complete ~54:METHOD FOR GENERATING MONITORING AND EVALUATION POINTS FOR VOID DETECTION IN BALLASTLESS TRACK BASED ON UAV INSPECTION ~71:CHENGDU VOCATIONAL &

TECHNICAL COLLEGE OF INDUSTRY, No. 818, Da'an Road, Zhengxing Town, Chengdu Area, Tianfu New Area, Chengdu City, Sichuan Province, 610000, People's Republic of China ~72: Aiping CHEN;Wei QI;Zhiwei MA~

2026/11085 ~ Complete ~54:HETEROCYCLIC ACIDS AS STING ANTAGONISTS AND THE USE THEREOF AS MEDICAMENT ~71:BOEHRINGER INGELHEIM INTERNATIONAL GMBH, Binger Strasse 173, Germany ~72: DAHMANN, Georg;FORDHAM, Camilla;HANDSCHUH, Sandra Ruth;HOFFMANN, Matthias;LI, Jun;NAR, Herbert;OOST, Thorsten;VINTONYAK, Viktor~ 33:US ~31:63/640,365 ~32:30/04/2024

2026/11089 ~ Complete ~54:APPARATUS AND METHOD FOR PRODUCING A REACTION PRODUCT ~71:BASF SE, Carl-von-Bosch-Str. 38, Germany;LINDE GMBH, Dr.-Carl-von-Linde-Strasse 6-14, Germany;SABIC GLOBAL TECHNOLOGIES B.V., Plasticslaan 1, Netherlands ~72: HABLA, Florian;HOFSTÄTTER, Martin;POSSELT, Heinz;RÖSSLER, Felix;ZELLHUBER, Mathieu~ 33:EP ~31:24020119.4 ~32:16/04/2024

2026/11096 ~ Complete ~54:3D HYBRID IMAGING RADAR SYSTEM ~71:INDURAD GMBH, Belvedereallee 5, 52070, Aachen, Germany ~72: RABEL, Matthias;WINKEL, Reik~

2026/11102 ~ Complete ~54:ARTIFICIAL INTELLIGENCE -BASED METHOD AND SYSTEM FOR INTERPRETING IMMUNOHISTOCHEMICAL STAINING RESULTS OF HELICOBACTER PYLORI ~71:CENTRAL HOSPITAL OF MINHANG DISTRICT SHANGHAI, No.170 Xinsong Road, Minhang District, People's Republic of China ~72: SHENG Xia;YUAN Chunyan~ 33:CN ~31:202511012984.X ~32:23/07/2025

2026/11071 ~ Provisional ~54:SYNTHESIS AND PRODUCTION OF ARTIFICIAL GOLD-LIKE MATERIALS WITH PERMANENT STABILITY AND NATIVE GOLD PROPERTIES ~71:Dakota Rain Beau Glen Rea, 3003 Red Oak Drive, Bend, Oregon, 97701, United States of America ~72: Dakota Rain Beau Glen Rea~

2026/11072 ~ Provisional ~54:HYBRID TRACKING MARKER ~71:Luyanda zondi, 103 Corbett crisent road Westgate, South Africa ~72: Luyanda zondi~

2026/11076 ~ Complete ~54:ROOF PANEL FOR SHEDDING A SNOW-ICE SLAB ~71:POZHIDAEVA Alina Vadimovna, Tagilskaya St. 4, Apt. 765, Moscow, 107143, Russian Federation ~72: POZHIDAEVA Alina Vadimovna~ 33:RU ~31:2026125601 ~32:20/08/2026

2026/11081 ~ Complete ~54:LEPTIN VARIANTS AND METHODS OF USE THEREOF ~71:PENGUIN BIO CORP., 1230 York Ave, Box 293, United States of America ~72: DIMARCHI, Richard;LI, Pengyun~ 33:US ~31:63/653,650 ~32:30/05/2024;33:US ~31:63/653,655 ~32:30/05/2024;33:US ~31:63/653,657 ~32:30/05/2024;33:US ~31:63/653,662 ~32:30/05/2024;33:US ~31:63/653,666 ~32:30/05/2024;33:US ~31:63/653,672 ~32:30/05/2024

2026/11087 ~ Complete ~54:COOLING NOZZLE FOR AN EXTRUDER ~71:BÜHLER AG, Gupfenstrasse 5, Switzerland ~72: CANTIENI, Nick;KLEIN, Frieder Sorbas;MEILE, David~ 33:EP ~31:24171224.9 ~32:19/04/2024

2026/11101 ~ Complete ~54:METHOD FOR CURTAIN GROUTING REINFORCEMENT OF TUNNEL GROUP IN DEEP BACKFILLED SOIL AREA AND EFFECT EVALUATION THEREOF ~71:China Railway 21st Bureau Group Fifth Engineering Co., Ltd., No. 877 Wenchang Road, Yongchuan District, People's Republic of China ~72: CAI Chengxi;CHEN Chen;CHEN Xiaoke;JIANG Zhiyuan;LOU Yuanhao;LU Changde;LU Zhiping;MOU Junhong;OU Tao;SHEN Guoshun;SUN Jiangning;WEI Dezhi;WU Jianguo;YAN Youkuan;ZENG Zhihan~ 33:CN ~31:202410602594.7 ~32:15/05/2024

2026/11121 ~ Provisional ~54:A REMOTE ACCESS VALVE ASSEMBLY FOR AN UNDER-SLUNG SPARE WHEEL OF A VEHICLE OR TRAILER ~71:AMAPS (PTY) LTD, 28 Ships Ahoy, 15 William Brown Road, South Africa ~72: Paul Colin Semple~

2026/11082 ~ Complete ~54:ORAL PHARMACEUTICAL COMPOSITION, MEDICAMENT FOR TREATMENT OF ANDROGENETIC ALOPECIA, USE AND METHOD FOR TREATMENT OF ANDROGENETIC ALOPECIA ~71:ACHÉ LABORATÓRIOS FARMACÊUTICOS S.A., Rodovia Presidente Dutra, s/n, KM 222,2, Brazil ~72: FERNANDA MONTEIRO, Maria;FLORENTINO DOS SANTOS, Felipe;PEREIRA COSTA, Leonardo;ZAMARA FERREIRA, Gabriela;ZANDONADI CAGNOTTO, Larissa~ 33:BR ~31:1020240096550 ~32:15/05/2024

2026/11086 ~ Complete ~54:HETARYL SUBSTITUTED INDAZOLES AND BENZIMIDAZOLES AS STING ANTAGONISTS AND THE USE THEREOF AS MEDICAMENT ~71:BOEHRINGER INGELHEIM INTERNATIONAL GMBH, Binger Strasse 173, Germany ~72: BRAMBILLA, Marta;DAHMANN, Georg;FORDHAM, Camilla;GROSS, Patrick;HOFFMANN, Matthias;LI, Jun;NAR, Herbert;OOST, Thorsten;THEIS, Theodor~ 33:US ~31:63/640,357 ~32:30/04/2024;33:EP ~31:24209201.3 ~32:28/10/2024

2026/11093 ~ Complete ~54:IMPROVED DOSING REGIMEN OF PEGYLATED HEMOGLOBIN ~71:PROLONG PHARMACEUTICALS, LLC, 300 Corporate Court, Suite B, SOUTH PLAINFIELD 07080, NJ, USA, United States of America ~72: JUBIN, Ronald;PANDYA, Shaunak G.~ 33:US ~31:63/635,099 ~32:17/04/2024

2026/11075 ~ Complete ~54:SNO2-X-BASED TRIETHYLAMINE GAS SENSOR, PREPARATION METHOD, AND APPLICATION THEREOF ~71:Qingdao University, No. 308 Ningxia Road, Qingdao, Shandong Province, 266071, People's Republic of China ~72: Chi LIU;Dan HAN;Jing TAO;Wenhua XU;Xinyu LIU~ 33:CN ~31:2026116656333 ~32:27/10/2026

2026/11080 ~ Complete ~54:ARTIFICIAL-INTELLIGENCE-BASED VIDEO BEHAVIOR ANALYSIS AND RECOGNITION SYSTEM AND DETECTION METHOD ~71:HAINAN MEDICAL UNIVERSITY (HAINAN ACADEMY OF MEDICAL SCIENCES), No.3,Xueyuan Road, Longhua District,Haikou City,Hainan Province, People's Republic of China ~72: LI Xinna;SUN Qinghui;SUN Qingsi;ZHANG Yutong;ZHENG Xiuju~

2026/11084 ~ Complete ~54:MONOARYL AND HETARYL SUBSTITUTED INDAZOLES AND BENZIMIDAZOLES AS STING ANTAGONISTS AND THE USE THEREOF AS MEDICAMENT ~71:BOEHRINGER INGELHEIM INTERNATIONAL GMBH, Binger Strasse 173, Germany ~72: DAHMANN, Georg;GROSS, Patrick;HOFFMANN, Matthias;LI, Jun;NAR, Herbert;OOST, Thorsten~ 33:US ~31:63/640,354 ~32:30/04/2024

2026/11091 ~ Complete ~54:CONTROLLING CLEANING OF A SCANNING DEVICE OF A MINING MACHINE ~71:SANDVIK MINING AND CONSTRUCTION OY, Pihtisulunkatu 9, TAMPERE 33330, FINLAND, Finland ~72: LAHTINEN, Juha;NASKALI, Juuso;RAUHALA, Riku~ 33:EP ~31:24184311.9 ~32:25/06/2024

2026/11097 ~ Complete ~54:LIGHTING DEVICE FOR A PROTECTIVE HELMET AND ITS OPERATING PRINCIPLE ~71:THI TOTAL HEALTHCARE INNOVATION S.R.L., Via della Produzione 5, 00030, San Cesareo RM, Italy ~72: DHO, Enrico;ROSATI, Adriano;ROSATI, Giorgio;SACCONI, Matteo~ 33:IT ~31:102024000018964 ~32:13/08/2024

2026/11098 ~ Complete ~54:ANTI-CD74 ANTIBODIES, CONJUGATES AND USES THEREOF ~71:VERTEX PHARMACEUTICALS INCORPORATED, 50 Northern Avenue, Boston, Massachusetts, 02210, United States of America ~72: BOITANO, Anthony;FALAHEE, Patrick C;LATIMER, Kellie;MCDONOUGH, Sean;PEARSE, Bradley R;RADKE, Emily;STEIN, Caitlin~ 33:US ~31:63/654,412 ~32:31/05/2024;33:US ~31:63/787,525 ~32:11/04/2025

2026/11079 ~ Complete ~54:IRREGULAR CROSS-SECTION SEALING SYSTEM AND METHOD FOR BACKFILL STOPE ~71:BGRIMM TECHNOLOGY GROUP, Building 23, Zone 18 of ABP, No. 188, South 4th Ring Road West, Fengtai District, Beijing 100160, People's Republic of China;Yongshan Jinsha Mining Co., Ltd., Jinsha Village, Daxing Town, Yongshan County, Zhaotong City, Yunnan Province 657309, People's Republic of China ~72: CHEN, Xinzheng;DUAN, Linsong;GUO, Lijie;HOU, Guoquan;LI, Bin;LI, Zongnan;LIU, Guangsheng;LIU, Zhongqiang;PENG, Xiaopeng;RUAN, Shishan;SHI, Caixing;WEI, Xiaoming;WU, Hongyun;XU, Wenyuan;YANG, Chao~ 33:CN ~31:202610445004.3 ~32:07/04/2026

2026/11092 ~ Complete ~54:AN ARRANGEMENT FOR RECOGNIZING A CHANGE IN ROCK DRILLING ~71:SANDVIK MINING AND CONSTRUCTION OY, Pihtisulunkatu 9, TAMPERE 33330, FINLAND, Finland ~72: JUSSILA, Henna~ 33:EP ~31:24181376.5 ~32:11/06/2024

2026/11099 ~ Complete ~54:SUBSTITUTED ARYL SULFONAMIDES AND COMPOSITIONS AND USES THEREOF ~71:XENON PHARMACEUTICALS INC., 3650 Gilmore Way, Burnaby, British Columbia, V5G 4W8, Canada ~72: BOYD, Michael J;CHARIFSON, Paul S;COCCIMIGLIO, Isabella;GILBERT, James;HAMBIRA, Chido M;JACKSON, Stephen K;KIM, Jung Yun;LOFSTRAND, Verner Alexander~ 33:US ~31:63/650,750 ~32:22/05/2024

2026/11168 ~ Provisional ~54:XPLORA CONVOY COORDINATION SYSTEM ~71:EXPLORABLE PLANET, 59 JERICHO COMPLEX, KOLBE STREET, South Africa;TIRO ONKGOPOTSE MOKODITOA, 59 JERICHO COMPLEX, KOLBE STREET, South Africa ~72: TIRO ONKGOPOTSE MOKODITOA~

2026/11073 ~ Provisional ~54:PADEL BUDDIES ~71:Grant Tyrone Verster, 54 Marine Dr, South Africa ~72: Grant Tyrone Verster~

2026/11077 ~ Complete ~54:CHECKING SYSTEM AND METHOD BASED ON BIM MODEL PARAMETERS ~71:Anhui Water Conservancy Technical College, No. 18, Hema Road, Dongmen, Hefei, Anhui, People's Republic of China ~72: Hailing Bao;Jiale Xie;Jian Li;Laiwei Wang;Wen Liu~

2026/11095 ~ Complete ~54:4-PHENYL-1H-PYRAZOLO[3,4-B]PYRIDINE-5-CARBOXAMIDE DERIVATIVES AS AMYLIN AND/OR CALCITONIN RECEPTOR AGONISTS FOR THE TREATMENT OF TYPE 2 DIABETES, OBESITY OR OVERWEIGHT ~71:ELI LILLY AND COMPANY, Lilly Corporate Center, INDIANAPOLIS 46285, IN, USA, United States of America ~72: BAREKATAIN, Mahta;BAUER, Renato A.;CASTAÑO, Ana Maria;CUMMINS, David Jesse;DOMINGUEZ FERNANDEZ, Maria Carmen;GUTIERREZ HERNANDEZ, Sara;HAMMILL, Jared T.;LAFUENTE BLANCO, Celia;LAKKIS, Hani G.;MARTINEZ BROKAW, Christina;MCMILLEN, William Thomas;MINGUEZ ORTEGA, Jose Miguel;OJAGHLOU, Neda;ONOBUN, Emmanuel;SANZ, Gema Consuelo;SCHMITT, Anne-Marie;SMITH, Abigail;SRINIVASAN, Srilok;WAHEED, Sodiq O.;WANG, Xuelin;WOERLY, Eric~ 33:EP ~31:24382530.4 ~32:17/05/2024;33:EP ~31:24382862.1 ~32:02/08/2024

. - APPLIED ON 2026/11/17 -

2026/11117 ~ Provisional ~54:ENERGY STORAGE RECORD ATTESTATIONS AND VERIFICATION USING INDEPENDENT BATTERY SIDE MEASUREMENTS ~71:FRANCOIS PIERRE JOUBERT, 521, 20TH AVENUE, RIETFONTEIN, South Africa ~72: FRANCOIS PIERRE JOUBERT~

2026/11104 ~ Provisional ~54:PREFABRICATED MICROPILE FOUNDATION SYSTEM WITH THREAD BAR MICROPILES AND PREFORMED MICROPILE CAP ~71:Franki MEA Ltd, Silicon Avenue, 4th Floor, The Catalyst Building, Mauritius ~72: CHANG, Hsin Pei~

2026/11107 ~ Complete ~54:MEMRISTOR NEURAL NETWORK-BASED ADAPTIVE SLIDING MODE CONTROL METHOD AND SYSTEM FOR SERVO SYSTEM ~71:JinHua University of Vocational Technology,

No. 888, Haitang West Road, Jinhua, People's Republic of China ~72: Chenyu ZHANG;Feng FEI;Mingze CHEN;Sihong CHEN;Xinchong YE;Yue SU~

2026/11108 ~ Complete ~54:A SYSTEM AND METHOD FOR PROVIDING INTERACTIVE TRAINING ~71:GREGORY CHARLES KINGSLEY DRAKE, 6 Ellis Place, Ballito, South Africa;JAMES SHERWOOD, 6 Ellis Place, Ballito, South Africa ~72: GREGORY CHARLES KINGSLEY DRAKE;JAMES SHERWOOD~ 33:ZA ~31:2025/06864 ~32:18/08/2025

2026/11110 ~ Complete ~54:VENGLUSTAT FOR USE IN METHODS FOR REDUCING DISEASE RELATED BIOMARKER LEVELS IN PATIENTS WITH GANGLIOSIDE STORAGE DISORDERS ~71:GENZYME CORPORATION, 450 Water Street, Cambridge, Massachusetts, United States of America ~72: BATSU, Isabela;FISCHER, Tanya;KISSELL, Julie;MININI, Pascal;ZHENG, Riliang~ 33:US ~31:63/636,318 ~32:19/04/2024

2026/11127 ~ Complete ~54:IMPROVEMENTS IN OR RELATING TO POLYMERIC MATERIALS ~71:THE FALCON PROJECT LTD, 25 Withington Drive, Astley, Manchester, Lancashire, M29 7NW, United Kingdom ~72: GUNER, Aran;JUBB, Daniel;LEWTAS, Kenneth;MCNALLY, Anthony~ 33:GB ~31:2407790.1 ~32:31/05/2024

2026/11122 ~ Provisional ~54:ADDENDUM 3 TO 2026/10023 - ROAD ROLL SCREEN ~71:Teboho Daniel Monare, E30 Morula street Windsor section Phokeng, South Africa ~72: Teboho Daniel Monare~ 33:ZA ~31:2026/10023 ~32:16/10/2026

2026/11125 ~ Provisional ~54:MEDICAL FIXATION APPARATUS AND SYSTEM ~71:SANTOSH BUGWANDIN, 371 Plantations, 47 Shongweni Road, Durban, 3610, South Africa ~72: BUGWANDIN, Santosh~

2026/11124 ~ Provisional ~54:INSTANT ACCESS CREDIT FRAMEWORK (IACF): SYSTEM AND METHOD FOR AUTOMATED, BEHAVIOUR-DRIVEN MICRO-CREDIT AND RECURRING-OBLIGATION PROCESSING WITH TAMPER-EVIDENT LEDGER, WALLET-BASED DISBURSEMENT AND MERCHANT-SETTLED REPAYMENT ~71:Kabelo Mosotho, 13 Cheetah Weg, South Africa ~72: Kabelo Mosotho;Mohale Kitso Mpesi~

2026/11126 ~ Complete ~54:A DRILL ROD AND A METHOD OF PRODUCING SUCH A DRILL ROD ~71:EPIROC DRILLING TOOLS AKTIEBOLAG, Box 521, 737 25, Fagersta, Sweden ~72: BEJAR, Luis;BERONIUS, Alexander;PERSSON, Jenny;STENBERG, Göran~

2026/11105 ~ Provisional ~54:DIVORCE DNA ~71:Nqobile, 1631 Anglo Gold Avenue, South Africa ~72: Nqobile~

2026/11116 ~ Provisional ~54:STATIONARY PISTON ELECTRIC GENERATOR ~71:KGOMOTSO RAYMOND THEKWA, 535 MAOKENG EXTENTION TEMBISA GAUTENG, South Africa ~72: KGOMOTSO RAYMOND THEKWA~

2026/11114 ~ Complete ~54:ANTI-B7-H3 ANTIBODIES AND METHODS OF USE THEREOF ~71:BRIAPRO THERAPEUTICS CORP., 2929 Arch Street, 3rd Floor, PHILADELPHIA 19104, PA, USA, United States of America ~72: LACHER, Markus D.;LOPEZ-LAGO, Miguel;WILLIAMS, William V.~ 33:US ~31:63/650,125 ~32:21/05/2024;33:US ~31:63/777,935 ~32:26/03/2025

2026/11113 ~ Complete ~54:ECTEINASCIDIN DERIVATIVES AND METHODS OF USE THEREOF AS ANTITUMOR AGENTS ~71:MERCK SHARP & DOHME LLC, 126 East Lincoln Avenue, RAHWAY 07065, NJ, USA, United States of America ~72: BACAUANU, Vlad;HUA, Zhong;LANG, Simon B.;SEGANISH, W. Michael~ 33:US ~31:63/651,074 ~32:23/05/2024

2026/11115 ~ Complete ~54:CD206 BINDING HUMAN FIBRONECTIN TYPE III PROTEIN SCAFFOLDS ~71:ARO BIOTHERAPEUTICS COMPANY, 601 WALNUT STREET, SUITE 740, PHILADELPHIA 19106, PA,

USA, United States of America ~72: DRUZINA, Zhanna;O'NEIL, Karyn T.;PALOZOLA, Katherine;SAKAMURI, Sukumar;SINGARAM, Indira~ 33:US ~31:63/654,396 ~32:31/05/2024;33:US ~31:63/710,764 ~32:23/10/2024;33:US ~31:63/749,941 ~32:27/01/2025

2026/11106 ~ Provisional ~54:FIBRE GLASS SOLAR GESER, UNTI RUST CAB ~71:Leslie Bonoko, No.7 Plein Street, South Africa ~72: leslie Bonoko~

2026/11109 ~ Complete ~54:VENGLUSTAT FOR USE IN METHODS FOR REDUCING DISEASE RELATED BIOMARKER LEVELS IN PATIENTS WITH GANGLIOSIDE STORAGE DISORDERS ~71:GENZYME CORPORATION, 450 Water Street, Cambridge, Massachusetts, United States of America ~72: BATSU, Isabela;LEVIT, Mikhail Nakhimovitch;SARDI, Sergio Pablo;ZHENG, Riliang~ 33:US ~31:63/636,315 ~32:19/04/2024

2026/11111 ~ Complete ~54:INJECTABLE FORMULATION ~71:LEVICEPT LIMITED, Innovation House, Discovery Park, United Kingdom ~72: WESTBROOK, Simon~ 33:GB ~31:2408819.7 ~32:19/06/2024;33:GB ~31:2417281.9 ~32:25/11/2024

2026/11112 ~ Complete ~54:PIPERAZINES WHICH ACT AS SSTR4 MODULATORS ~71:GRÜNENTHAL GMBH, Zieglerstraße 6, AACHEN 52078, GERMANY, Germany ~72: DIALER, Clemens;NORDHOFF, Sonja;PEIL, Sebastian;PETTERSSON, Martin~ 33:EP ~31:24178741.5 ~32:29/05/2024;33:US ~31:63/652,755 ~32:29/05/2024

2026/11123 ~ Provisional ~54:MULTIFUNCTIONAL CONTAINER OPENING AND RIM-CLEANING IMPLEMENT ~71:Nicolaas ERASMUS, 6 WATERSON STREET PARKDENE, South Africa ~72: Nicolaas ERASMUS~

2026/11128 ~ Complete ~54:SINGLE BOARD SATELLITE SYSTEMS AND METHODS ~71:ASPECT AEROSPACE LLC, 13712 Tom Gaston Rd, Mobile, AL 36695, United States of America ~72: RUSS, Andrew;RUSS, Samuel~ 33:US ~31:63/638,384 ~32:24/04/2024

. - APPLIED ON 2026/11/18 -

2026/11154 ~ Complete ~54:METHOD AND DEVICE FOR ASSISTING IN A FAULT RESOLUTION PROCESS FOR RESOLVING ONE OR MORE FAULTS AT ONE OR MORE PIECES OF INDUSTRIAL EQUIPMENT ~71:GEA REFRIGERATION GERMANY GmbH, Holzhauser Str. 165, BERLIN 13509, GERMANY, Germany ~72: HACK, Johannes;HAUCK, Lorena;KAUTH, Felix;SCHELLEKENS, Jeroen~ 33:EP ~31:24177687.1 ~32:23/05/2024

2026/11161 ~ Complete ~54:STREAMING CURRENT MONITOR ~71:DBG IP LIMITED, 18 Lorien Place East Tamaki Auckland, 2013, New Zealand ~72: BOWRING, Grant Anthony;EDNEY, Daniel Bryan Laird~ 33:US ~31:63/641,147 ~32:01/05/2024

2026/11164 ~ Complete ~54:STABLE TOPICAL COMPOSITIONS FOR TREATING ATROPHIC VAGINITIS ~71:JASTLABS CORPORATION, 2888 Bathurst Street, 2nd Floor, North York, Canada ~72: LAXMINARAYAN, Joshi;PETTLE, Alvin~ 33:CA ~31:PCT/CA2024/050527 ~32:22/04/2024

2026/11167 ~ Complete ~54:INSTRUCTION TO ACCELERATE HASH PROCESSING ~71:INTERNATIONAL BUSINESS MACHINES CORPORATION, New Orchard Road, Armonk, United States of America ~72: BRADBURY, Jonathan;GOMES, Louis;KILINÇ, Görkem;RAO, Rajat;SLEGEL, Timothy~ 33:US ~31:18/756,603 ~32:27/06/2024

2026/11145 ~ Complete ~54:PREPARATION METHOD FOR WEAR-RESISTANT COATING OF REDUCER HOUSING ~71:HANGZHOU SUPROR TRANSMISSION MACHINERY CO., LTD, No.19 Yangcheng Road,

Nanyang Subdistrict, Xiaoshan District, Hangzhou City, Zhejiang Province, 310000, People's Republic of China ~72: LI Sheng;LIU Xuesong;XIE Lei;YIN Zhuodi~ 33:CN ~31:2026102737462 ~32:07/03/2026

2026/11150 ~ Complete ~54:BENEFICIATION OF LOW CONCENTRATION PRE-REDUCED MNO TO PRODUCE MNSO4 ~71:INNOVATIVE MANGANESE TECHNOLOGIES SA (PTY) LTD., 97 Broadbury Circle, Cornwall Hill Estate, CORNWALL HILL, 0178, Gauteng Province, SOUTH AFRICA, South Africa ~72: PRETORIUS, Gerard~ 33:ZA ~31:2024/02994 ~32:18/04/2024

2026/11153 ~ Complete ~54:YEAST STRAIN DEVELOPMENT FOR ETHANOL PRODUCTION ~71:AB MAURI, 4240 Duncan Ave., ST. LOUIS 63110, MI, USA, United States of America ~72: BARBIERI, Maria del Rosario;EVANS IV, John Henry;PERRINE, Zoee Gokhale~

2026/11158 ~ Complete ~54:SHELL LINER FOR A STIRRED GRINDING MILL ~71:METSO FINLAND OY, Rauhalanpuisto 9, ESPOO 02230, FINLAND, Finland ~72: RICE, Michael Christopher;RIZZOLI, Rodrigo~ 33:US ~31:18/659,448 ~32:09/05/2024

2026/11163 ~ Complete ~54:METHODS EMPLOYING THIOUREA FOR METAL EXTRACTION ~71:INNOVATION MINING INC., 119 - 998 Harbourside Drive, North Vancouver, Canada ~72: JAFARI, Hanif;KAFAEI, Reza;NELSON, Duane~ 33:US ~31:63/650,731 ~32:22/05/2024

2026/11134 ~ Complete ~54:WATER ECOLOGICAL ENVIRONMENT MONITORING APPARATUS FOR COLD AND HIGH-ALTITUDE RIVER BASINS ~71:Shigatse Ecological Environment Monitoring Center of Xizang Autonomous Region, No.7 Qingdao Road, Sangzhuzi District, Shigatse, Xizang Autonomous Region, 857000, People's Republic of China ~72: Dawa;MA, Li;Pubuciren;SHANGGUAN, Shilun;Sinanyongxi;Zhaxiciren~

2026/11130 ~ Provisional ~54:TRI-DIRECTION: VEHICLE STRAIGHT-INTENTION SIGNALLING SYSTEM AND CONTROL METHOD ~71:PULANA WALTER MATSEKANGOPE, 2553 GREY LOURIE STREET,EXTENSION 1,MAMELODI EAST, South Africa ~72: PULANA WALTER MATSEKANGOPE~

2026/11136 ~ Complete ~54:SEAWATER HEAT EXCHANGE DEVICE FOR A NUCLEAR POWER PLANT ~71:Luo Siyuan, Room 607, Building 27, South Nuclear Power Plant, No. 57 Qinjian South Road, Wuyuan Street, Haiyan County, Zhejiang Province, People's Republic of China ~72: Luo Siyuan;Yan Shubin~

2026/11162 ~ Complete ~54:CONSTRUCTS AND VECTORS FOR REPROGRAMMING CELLS TO CDC1 CELLS, COMPOSITIONS AND METHODS THEREOF ~71:ASGARD THERAPEUTICS AB, Medicon Village, 223 81 Lund, Sweden ~72: ASCIC, Ervin;PEREIRA, Carlos Filipe Ribeiro Lemos;PIRES, Cristiana Ferreira;ROSA, Fábio Alexandre Fiúza~ 33:EP ~31:24184266.5 ~32:25/06/2024;33:EP ~31:25170745.1 ~32:15/04/2025

2026/11137 ~ Complete ~54:A METHOD FOR PRE-CONCENTRATION AND WASTE REJECTION OF LOW-GRADE COPPER-SULFUR ORE ~71:Kunming University of Science and Technology, No. 68 Wenchang Road, 121 Street, Wuhua District, Kunming City, Yunnan Province, 650300, People's Republic of China ~72: Dianwen Liu;Hongyu Lu;Jiaqiao Yuan;Mingjun Chen;Shaojun Bai;Shuming Wen;Wei Jiang~

2026/11138 ~ Complete ~54:ACTIVATABLE CYTOKINE CONSTRUCTS AND RELATED COMPOSITIONS AND METHODS ~71:CYTOMX THERAPEUTICS, INC., 151 OYSTER POINT BOULEVARD, SUITE 400, SOUTH SAN FRANCISCO, CALIFORNIA 94080, USA, United States of America ~72: ASSI, Hikmat, Haizar;BOGDANOFF, Walter, A.;CAI, Na;DANIEL, Dylan, L.;LAPUYADE, Nicole, G.;LE SCOLAN, Erwan;MITRA, Sayantan;PAIDHUNGAT, Madan, M.;WANG, Hsin~ 33:US ~31:63/008,542 ~32:10/04/2020;33:US ~31:63/161,889 ~32:16/03/2021;33:US ~31:63/164,849 ~32:23/03/2021

2026/11141 ~ Complete ~54:A CAPACITIVE STORAGE DEVICE ~71:CHAMPION MOBILE GLOBAL LTD, Ridge View, Wellgreen Lane, Kingston-Upon-Lewes, United Kingdom ~72: KHAN, Saad Saleem;NISAR, Hamza Ali;OMAR, Muhammad;ROBINSON, Justyna;SHAMS, Farhan;SIDDIQUE, Husnain;USMAN, Muhammad~ 33:ZA ~31:2025/09882 ~32:20/11/2025

2026/11157 ~ Complete ~54:MICRO-ALLOYED HOT ROLLED STRIP WITH IMPROVED FORMABILITY, ABOVE 700 MPA ~71:VOESTALPINE STAHL GMBH, voestalpine Strasse 3, LINZ 4020, AUSTRIA, Austria ~72: HRIBERNIG, Gottfried;SCHICKINGER, Martin;SONNLEITNER, Markus;SPINDLER, Helmut~ 33:EP ~31:24182344.2 ~32:14/06/2024

2026/11165 ~ Complete ~54:TIMBER-REINFORCED BACKFILL BAG ~71:Timrite (Pty) Ltd, 10 Van der Bijl Street, South Africa ~72: MOFOKENG, Dineo;MUKONDELELI, Sanele~ 33:ZA ~31:2024/03297 ~32:29/04/2024

2026/11132 ~ Complete ~54:LOAD INDICATOR ~71:TECHO (PTY) LTD, 18 Stephen Road, Anerley, Port Shepstone, South Africa ~72: BEZUIDENHOUT, Peter Rocco;FORSTER, Barend Jacobus;FORSTER, Benjamin William~ 33:ZA ~31:2025/03198 ~32:18/08/2025

2026/11133 ~ Complete ~54:AN INTEGRATED DETECTION SYSTEM FOR MULTI-PARAMETER IDENTIFICATION OF WATER SOURCES AND LOCALIZATION OF WATER-CONDUCTING CHANNELS IN TUNNEL WATER INRUSH ~71:SICHUAN ZHENTONG INSPECTION CO. LTD, No. 420, Qinghua West Street, Qingyi Town, Fucheng District, Mianyang City, Sichuan Province, 621000, People's Republic of China;Southwest University of Science and Technology, A314, Special Laboratory Building, No. 59, Middle Section of Qinglong Avenue, Fucheng District, Mianyang City, Sichuan Province, 621000, People's Republic of China ~72: Bihe Zhang;Guangyan Liu;Haoyan Zhang;Luyao Ma;Minzhi Huang;Shaoping Yang;Yaodong Luo~

2026/11135 ~ Complete ~54:ANTI-BLOCKING SLAG DISCHARGING DEVICE FOR FRUIT RESIDUE OF FRESHLY SQUEEZED FRUIT JUICE ~71:Shaanxi Qinrunde Food Technology Co., Ltd., Room 1302, Unit 4, Building 1, Jiaotong Nanyuan, No. 12 Chang'an South Road, Yanta District, Xi'an, Shaanxi Province, People's Republic of China ~72: Wei, Hui~

2026/11139 ~ Complete ~54:SYSTEM AND METHOD FOR AMPLIFYING ELECTROMAGNETIC WAVES IN A TRANSCEIVER ~71:CHAMPION MOBILE GLOBAL LTD, Ridge View, Wellgreen Lane, Kingston-Upon-Lewes, United Kingdom ~72: ALI, Aatif;KHAN, Saad Saleem;MURTAZA, Hussain;OMAR, Muhammad;ROBINSON, Justyna;USMAN, Muhammad~ 33:ZA ~31:2025/09823 ~32:19/11/2025

2026/11142 ~ Complete ~54:FIRELIGHTER MANUFACTURING METHOD AND PRODUCT THEREOF ~71:DE WITT, Wynand, Plot 6/1 Pointsettia Avenue, Gerhardsville, South Africa ~72: DE WITT, Wynand~ 33:ZA ~31:2026/01227 ~32:30/01/2026

2026/11144 ~ Complete ~54:AN APPARATUS FOR DETERMINING A ROTATIONAL STATE OF AN OBJECT ~71:CHAMPION MOBILE GLOBAL LTD, Ridge View, Wellgreen Lane, Kingston-Upon-Lewes, United Kingdom ~72: KHAN, Saad Saleem;NISAR, Hamza Ali;OMAR, Muhammad;QAYYUM, Hafza;ROBINSON, Justyna;SIDDIQUE, Husnain;USMAN, Muhammad~ 33:ZA ~31:2025/09883 ~32:20/11/2025

2026/11148 ~ Complete ~54:MIXTURES OF STROBILURIN TYPE COMPOUNDS FOR COMBATING PHYTOPATHOGENIC FUNGI CONTAINING AN AMINO ACID SUBSTITUTION F129L IN THE MITOCHONDRIAL CYTOCHROME B PROTEIN CONFERRING RESISTANCE TO QO INHIBITORS WITH AT LEAST ONE FURTHER PESTICIDE I ~71:BASF AGRICULTURAL SOLUTIONS DEUTSCHLAND GMBH, SPEYERER STR. 2, 67117 LIMBURGERHOF, GERMANY, Germany ~72: BRAHM, Lutz;DEY, Chandan;DIETZ, Jochen;LUDWIG, Lydia~ 33:EP ~31:24172090.3 ~32:24/04/2024;33:EP ~31:24199417.7 ~32:10/09/2024

2026/11151 ~ Complete ~54:A METHOD OF QUANTIFYING THE CARBON FOOTPRINT OF LIVESTOCK ~71:AGRIMIX PTY LTD, 45 Robinson Rd, E Virginia, Australia ~72: GRACE, Peter;KEMPE, Nicholas;ROWLINGS, David;TAKEDA, Naoya~ 33:AU ~31:2024901579 ~32:28/05/2024;33:AU ~31:2024903468 ~32:25/10/2024;33:AU ~31:2025901233 ~32:10/04/2025

2026/11156 ~ Complete ~54:CLINICAL IMMUNOASSAY WITH EARLY SIGNAL MEASUREMENT ~71:CEZANNE S.A.S., 280 Allée Graham Bell, Parc Scientifique Georges Besse, NIMES 30035, CÉDEX 1, FRANCE, France ~72: BOIS, Emmanuel;DUQUENNE, Charline;VIVIER, Ludivine~ 33:EP ~31:24306179.3 ~32:12/07/2024;33:EP ~31:24203884.2 ~32:01/10/2024

2026/11131 ~ Provisional ~54:SOVEREIGN STRATEGY-TO-OUTCOME INTELLIGENCE PLATFORM (SSOIP) A SYSTEM AND METHOD FOR INTEGRATED STRATEGIC ALIGNMENT, RESOURCE INTELLIGENCE, DATA SOVEREIGNTY, EXECUTION TRACEABILITY AND OUTCOME ASSURANCE ~71:Kgothatso Emily Motsepe, 32 Glenavon Avenue, South Africa ~72: Kgothatso Emily Motsepe~

2026/11140 ~ Complete ~54:A SYSTEM AND METHOD FOR VARYING PHASE DELAY OF AN ELECTROMAGNETIC WAVE ~71:CHAMPION MOBILE GLOBAL LTD, Ridge View, Wellgreen Lane, Kingston-Upon-Lewes, United Kingdom ~72: ALI, Aatif;ATIQ, Hamza;KHALID, Bilal;KHAN, Saad Saleem;OMAR, Muhammad;ROBINSON, Justyna;USMAN, Muhammad~ 33:ZA ~31:2025/09824 ~32:19/11/2025

2026/11146 ~ Complete ~54:ELECTROMAGNETIC ROTATING MACHINE ~71:Shide YANG, No. 42 Luqu Road, Hezuo City, Gannan Tibetan Autonomous Prefecture, Gansu Province, 747000, People's Republic of China ~72: Shide YANG~

2026/11147 ~ Complete ~54:SECURITY LANE AND DIVERTER ~71:DAIFUKU AIRPORT NETHERLANDS B.V., 131, Hoeksteen, Netherlands ~72: BREUR, Wido;VOET, Sander Johan~ 33:NL ~31:2037955 ~32:14/06/2024

2026/11149 ~ Complete ~54:METHODS AND SYSTEMS FOR OFFSHORE MOORING OPERATIONS ~71:ENCOMARA LIMITED, 28 Albyn Place, United Kingdom ~72: BOWIE, Malcolm;DONALD, Ian;REID, John~ 33:GB ~31:2405489.2 ~32:18/04/2024

2026/11152 ~ Complete ~54:METHOD AND SYSTEM FOR TOPOLOGICAL RECONSTRUCTION OF FLOOR PLAN BASED ON GEOMETRIC AND SEMANTIC COLLABORATIVE GUIDANCE, DEVICE AND, MEDIUM ~71:BEIJING ZHUANGKU CREATIVE TECH. LTD, 7th Floor, Building 41, Zone 12, No. 188 West South Fourth Ring Road, Fengtai District, Beijing, 100071, People's Republic of China ~72: Chang YU;Jiankang YAO;Jie GAO;Keyi WANG;Zhanhai GAO~ 33:CN ~31:202611546068.9 ~32:08/10/2026

2026/11159 ~ Complete ~54:RESISTANCE SPOT WELDING METHOD FOR ALUMINUM-SILICON COATED HOT-FORMED STEEL HAVING TENSILE STRENGTH OF 1000-1700 MPA ~71:BAOSHAN IRON & STEEL CO., LTD., NO.885, FUJIN ROAD, Baoshan District, SHANGHAI 201900, CHINA (P.R.C.), People's Republic of China ~72: DING, Kai;GONG, Tao;LEI, Ming;LIU, Chengjie;PAN, Hua;WEN, Zhongling;WU, Tianhai;WU, Yue~ 33:CN ~31:202410484589.0 ~32:22/04/2024

2026/11160 ~ Complete ~54:STAT6 MODULATORS AND METHODS OF USES THEREOF ~71:RAYTHERA, INC., 11988 El Camino Real, Suite 600, SAN DIEGO 92130, CA, USA, United States of America ~72: BOLLU, Venkat;DONG, Qing;TRZOSS, Lynnie;YANG, Pengyu;ZHANG, Junhu~ 33:US ~31:63/636,633 ~32:19/04/2024;33:US ~31:63/662,078 ~32:20/06/2024;33:US ~31:63/673,537 ~32:19/07/2024;33:US ~31:63/694,665 ~32:13/09/2024;33:US ~31:63/724,224 ~32:22/11/2024;33:US ~31:63/765,019 ~32:28/02/2025;33:US ~31:63/774,384 ~32:19/03/2025

2026/11166 ~ Complete ~54:SUPPORT STRUCTURE FOR A MOTOR VEHICLE BATTERY ASSEMBLY COMPRISING A TRAY AND A COVER ~71:APERAM, 26 Boulevard d' Avranches, Luxembourg ~72: BOYAT, Xavier;LEGER, Pierre Emmanuel Jacques Jean Denis;SAEDLOU, Saghi Ophélie Bahar~ 33:WO ~31:PCT/IB2024/055403 ~32:03/06/2024

2026/11143 ~ Complete ~54:AN APPARATUS FOR IDENTIFYING FINGERPRINT PATTERNS ~71:CHAMPION MOBILE GLOBAL LTD, Ridge View, Wellgreen Lane, Kingston-Upon-Lewes, United Kingdom ~72: HABIB, Maryam;KHAN, Saad Saleem;OMAR, Muhammad;QAYYUM, Hafza;ROBINSON, Justyna;USMAN, Muhammad~ 33:ZA ~31:2025/09884 ~32:20/11/2025

2026/11155 ~ Complete ~54:AZAINDOLINONE COMPOUNDS AS KCA3.1 POTASSIUM CHANNEL BLOCKERS ~71:D. E. SHAW RESEARCH, LLC, 120 W. 45th Street - 39th Floor, NEW YORK 10036, NY, USA, United States of America ~72: GIORDANETTO, Fabrizio;JENSEN, Morten Østergaard;JOGINI, Vishwanath;SNOW, Roger John~ 33:US ~31:63/643,064 ~32:06/05/2024

. - APPLIED ON 2026/11/19 -

2026/11176 ~ Complete ~54:SELF-EMULSIFYING HYPERBRANCHED WATERBORNE POLYURETHANE COMPOSITE MODIFIED EMULSIFIED ASPHALT AND PREPARATION METHOD THEREFOR ~71:Chang’an University, Middle Section, South 2nd Ring Road, Xi'an, Shaanxi Province, People's Republic of China;Taihang Urban and Rural Construction Group Co., Ltd., No. 569, Shitong Road, Luquan District, Shijiazhuang City, Hebei, People's Republic of China ~72: Chaohui WANG;Chenyang ZHANG;Hongjun SUN;Lei FENG;Lisong DUAN;Peikai HE;Qian CHEN;Yanwei LI;Ying ZHANG;Zhibin WANG;Zhiqiang ZHANG;Zike GAO~

2026/11200 ~ Complete ~54:PORTABLE BLENDER WITH DRINK-THROUGH LID CLOSURE ~71:CAPBRAN HOLDINGS, LLC, 10900 Wilshire Blvd., Suite 900, Los Angeles, California, 90024, United States of America ~72: FINNANCE, Robert~ 33:US ~31:29/946,728 ~32:11/06/2024;33:US ~31:18/900,297 ~32:27/09/2024

2026/11169 ~ Provisional ~54:SURGICAL DRAPE ~71:ZEN MEDICAL (PTY) LTD, 8 Reed Park, Unit 12 Reed Place, Westmead, Pinetown, 3051, SOUTH AFRICA, South Africa ~72: HARIPARSAD, Sudesh~

2026/11171 ~ Provisional ~54:A METHOD FOR STAGING AND MONITORING AN INFECTION ~71:MARTI TB DIAGNOSTICS (PTY) LTD, Biopark 1 building, The Innovation Hub campus, Persequor, Pretoria 0087, Gauteng, SOUTH AFRICA, South Africa ~72: BAUMEISTER, Carl Robert;VERSCHOOR, Jan Adrianus~

2026/11180 ~ Complete ~54:SYSTEM AND METHOD FOR CONFIGURABLE REAL-TIME HEALTHCARE ADMINISTRATION, CLAIMS PROCESSING, IDENTITY VERIFICATION, AND MULTI-PAYER INTEROPERABILITY ~71:NEW SHAMROCK HOLDINGS (PRIVATE) LIMITED, 33 Craster Road, Southerton, Harare, Zimbabwe ~72: NAIK, Suketu~ 33:AP ~31:AP/U/2026/000296 ~32:06/05/2026

2026/11185 ~ Complete ~54:HER2 TARGETING CYCLIC PEPTIDES AND CONJUGATES THEREOF ~71:NOVARTIS AG, Lichtstrasse 35, Switzerland ~72: CLEMENTE, Gonçalo dos Santos;EHARA, Takeru;FELBER, Richard;FISCHER, Matteo;GAUTER, Francois;KARPOV, Alexei;LACAUD-BAUMLIN, Marion;MALO, Rafael Bermeo;MARZINZIK, Andreas;MIZUKOSHI, Yoshihide;PARK, Danielle;RESCHKE, Markus Oliver;RIPOCHE, Sebastien;SCHAEFER, Klaus-Michael;STACHYRA, Therese-Marie;UEDA, Kyosuke;ZUEGER, Patrik Peter~ 33:US ~31:63/637,572 ~32:23/04/2024;33:US ~31:63/760,270 ~32:19/02/2025

2026/11189 ~ Complete ~54:METHOD OF MASKING SCUFF OR SCRATCH MARKS ON CONTAINERS ~71:DIVERSEY, INC., 1300 Altura Road, Suite 125, FORT MILL 29708, SC, USA, United States of America ~72: AREKAR, Chetan Dnyandev;CHAUDHARI, Kedar;CHAVAN, Sandeep;SINGH, Priya~ 33:IN ~31:202431031534 ~32:20/04/2024

2026/11191 ~ Complete ~54:SPATIAL STRUCTURAL FRAME MATCHING METHOD AND COLLABORATIVE PRODUCT RECOMMENDATION SYSTEM FOR PREFABRICATED INTERIOR DECORATION, DEVICE, AND STORAGE MEDIUM ~71:BEIJING ZHUANGKU CREATIVE TECH. LTD, 7th Floor, Building 41, Zone 12, No. 188 West South Fourth Ring Road, Fengtai District, Beijing, 100071, People's Republic of China ~72: Chang YU;Jiankang YAO;Jie GAO;Keyi WANG;Zhanhai GAO~ 33:CN ~31:202611486085.8 ~32:23/09/2026

2026/11197 ~ Complete ~54:SYSTEM AND METHOD FOR MANAGING BATTERY ELECTRIC MACHINES AT WORKSITES ~71:CATERPILLAR INC., 100 NE Adams Street, Peoria, United States of America ~72: BRANDON, Alison;BROCKHURST, Russell Allen;LEWIS, Adam~ 33:US ~31:18/670,795 ~32:22/05/2024

2026/11173 ~ Provisional ~54:DRONE BARRIER ~71:COCHRANE GULF FZE, 901 Suntech Tower, Silicon Oasis, United Arab Emirates ~72: BUCARIZZA, Vlado~

2026/11188 ~ Complete ~54:MODULAR PREFABRICATED STEEL-STRUCTURE TRESTLE BRIDGE DESIGN METHOD AND SYSTEM ~71:SHAANXI ZHENGYUAN WISDOM EQUIPMENT CO., LTD., outhwest of the intersection of Qianyuan Road and Park Avenue, Mahuangliang Industrial Park, Yuyang District, Yulin City, Shaanxi Province, Shaanxi Province, People's Republic of China ~72: CHEN Qingquan;Li Jinrui;Liu Yihang;WANG Bin;ZHAO Xueli~ 33:CN ~31:2026108062367 ~32:05/06/2026

2026/11196 ~ Complete ~54:CONTACTOR SELECTION TO OPEN UNDER LOAD ~71:CATERPILLAR INC., 100 NE Adams Street, Peoria, United States of America ~72: BAILEY, Bradley Scott;MENOLD, Rodney L.~ 33:US ~31:18/668,851 ~32:20/05/2024

2026/11177 ~ Complete ~54:METHOD AND SYSTEM FOR PREDICTING PERFORMANCE OF WATERBORNE RESIN POLYMER MODIFIED EMULSIFIED ASPHALT ~71:Chang’an University, Middle Section, South 2nd Ring Road, Xi'an, Shaanxi Province, People's Republic of China;Taihang Urban and Rural Construction Group Co., Ltd., No. 569, Shitong Road, Luquan District, Shijiazhuang City, Hebei, People's Republic of China ~72: Chaohui WANG;Dan ZHANG;Hao FU;Hongjun SUN;Jianyun MA;Lei FENG;Peikai HE;Qian CHEN;Shaobo ZHANG;Si PENG;Xinkang YANG;Yanwei LI;Ying ZHANG;Zhibin WANG;Zhiqiang ZHANG~

2026/11201 ~ Complete ~54:IMPROVED METHODS FOR IN VITRO TRANSCRIPTION ~71:ARCTURUS THERAPEUTICS, INC., 10628 Science Center Drive, Suite 250, United States of America ~72: CHOI, Kyoung-Joo Jenny;HILL, Brett Dallas~ 33:US ~31:63/670,564 ~32:12/07/2024;33:US ~31:63/791,838 ~32:12/04/2025

2026/11178 ~ Complete ~54:PERMANENT MAGNET SEMI-DIRECT DRIVE SLEWING MECHANISM FOR MINING EXCAVATOR AND CONTROL METHOD THEREFOR ~71:TAIYUAN HEAVY INDUSTRY CO., LTD, No.53, Yuhe Street, Wanbailin District, People's Republic of China ~72: DAI Jixin;FAN Xibin;JIA Yunxiang;LEI Zhengjie;MA Fei;MAO Rui;SHI Xin;SU Yundong;WANG Zhicheng;XU Yuming;YANG Zhe;YANG Zuo;YUAN Yunxing;ZHAO Tengyun~ 33:CN ~31:202511998768.7 ~32:29/12/2025

2026/11182 ~ Complete ~54:PEST CONTROL ~71:INSECT SCIENCE (PTY) LTD, 9 Industria Street, New Industrial area, Tzaneen 0850, Limpopo Province, SOUTH AFRICA, South Africa ~72: BOUWER, Marc Clement;STEYN, Vernon Murray;VAN GREUNEN, Divan Gerald~ 33:ZA ~31:2025/10316 ~32:02/12/2025

2026/11195 ~ Complete ~54:LY6G6D BINDING PROTEINS, NUCLEIC ACIDS ENCODING SUCH PROTEINS, AND METHODS FOR THE PREPARATION AND USE THEREOF ~71:CARTOGRAPHY BIOSCIENCES, INC., 230 EAST GRAND AVENUE, SUITE 250, SOUTH SAN FRANCISCO, CALIFORNIA 94080, USA, United States of America ~72: CHEN, Robert;KUGLER, David, Geoffrey;MARTINKO, Alexander, John;PALURU, Prasuna;SCHUURMAN, Janine;YIGIT, Burcu~ 33:US ~31:63/638,332 ~32:24/04/2024

2026/11199 ~ Complete ~54:DYNAMIC DETERMINATION OF BLENDED AXLE SPLIT FOR BRAKING ~71:CATERPILLAR INC., 100 NE Adams Street, Peoria, United States of America ~72: LANE, Cameron Thomas;OLSON, Andrew John;SCHNEIDER, Karl P.~ 33:US ~31:18/673,049 ~32:23/05/2024

2026/11186 ~ Complete ~54:FILTER ASSEMBLY FOR A FERMENTATION VESSEL AND A FERMENTATION VESSEL COMPRISING THE FILTER ASSEMBLY ~71:AURIC BARRELS D.O.O., Vatroslava Lisinskog 65, Croatia;POPA, Vitalie, 1 Uzinelor street, apartment number 6, Republic of Moldova ~72: GANTENBRINK, Bruno Alexander;POPA, Vitalie~ 33:EP ~31:24176917.3 ~32:21/05/2024

2026/11193 ~ Complete ~54:STRUCTURING AGENT FOR USE IN FOODS ~71:OMNIS HOLDINGS INC., 133 Neeve Street, Guelph, Canada ~72: MARANGONI, Alejandro;MARANGONI, Isaac~ 33:US ~31:18/643,521 ~32:23/04/2024

2026/11170 ~ Provisional ~54:A METHOD FOR STAGING AN UNTREATED INFECTION AND DETECTING EXPOSURE TO AN INFECTIOUS AGENT ~71:UNIVERSITY OF PRETORIA, Lynnwood Road, Hillcrest, PRETORIA 0002, SOUTH AFRICA, South Africa ~72: BAUMEISTER, Carl Robert;VERSCHOOR, Jan Adrianus~

2026/11175 ~ Complete ~54:ADJUSTABLE OUSU PATTERN-PRESSING TOOL ~71:Zhejiang Industry and Trade Vocational College, No. 717 Fudong Road, Wenzhou City, Zhejiang Province, People's Republic of China ~72: Zheng Yangfan~

2026/11181 ~ Complete ~54:NASAL SPRAY COMPOSITION ~71:GLENMARK SPECIALTY S.A., Place du Port 2, 2000, Neuchatel, Switzerland ~72: ANKAM, Rajesh;DHUPPAD, Ulhas;KATKURWAR, Ashok;SHARMA, Pravinkumar~ 33:IN ~31:202321078834 ~32:21/11/2023

2026/11187 ~ Complete ~54:METHOD AND SYSTEM FOR SPACE TEMPLATE MATCHING AND DESIGNING, DEVICE, AND STORAGE MEDIUM ~71:BEIJING ZHUANGKU CREATIVE TECH. LTD, 7th Floor, Building 41, Zone 12, No. 188 West South Fourth Ring Road, Fengtai District, Beijing, 100071, People's Republic of China ~72: Chang YU;Jiankang YAO;Jie GAO;Keyi WANG;Zhanhai GAO~ 33:CN ~31:202611556329.5 ~32:09/10/2026

2026/11194 ~ Complete ~54:YEAST STRAINS PRODUCING HIGH LEVELS OF ISOAMYL ACETATE ~71:CARLSBERG A/S, J.C. Jacobsens Gade 1, Denmark ~72: ATHANASOPOULOS, Helena da Silva;DAUTE, Martina;GOJKOVIC, Zoran;HARHOLT, Jesper;KATZ, Michael;LENGELER, Klaus;MALINA, Carl Gustav Anton;MOELLER-HANSEN, Iben;SEVILLA, Manuel Ernesto Arreola;VILANDT, Rikke Uhre~ 33:EP ~31:24184574.2 ~32:26/06/2024

2026/11198 ~ Complete ~54:OPTIMISATION OF THE EFFICIENCY OF PARALLEL DC-DC CONVERTERS IN A BATTERY POWERED MACHINE ~71:CATERPILLAR INC., 100 NE Adams Street, Peoria, United States of America ~72: BAILEY, Bradley S.;HENDRICKSON, Matthew L.;MENOLD, Rodney L.~ 33:US ~31:18/671,029 ~32:22/05/2024

2026/11174 ~ Provisional ~54:SKYRYDER MODULAR OVERHEAD POWER-LINE INSPECTION AND IDENTIFICATION ROBOT WITH POWER HARVESTING COMPONENT ~71:Cecil Albert Mitchell, 52 Alexandra Rd, South Africa ~72: Cecil Albert Mitchell~

2026/11183 ~ Complete ~54:INTELLIGENT DIRT REMOVAL AND DEODORIZATION DEVICE FOR FATTENING PIG HOUSE ~71:Shandong Shenghongyuan Agriculture and Animal Husbandry Co. Ltd., 800 meters northeast of the Yuanwu Village Committee, Handian Town, Zouping City, Binzhou City, Shandong Province 256209, People's Republic of China ~72: CAO Xinjie;CHEN Shouliang;CHEN Weidong;LI Yanhua;LI

Zhaojun;LIU Lili;LIU Xiaoqing;LUO Keliang;LV Xiuhong;SUN Lixia;WANG Baisheng;WANG Cuiping;ZHANG Zhiwei;ZHAO Shoushan;ZHENG Quanxin~ 33:CN ~31:202621515185.4 ~32:24/09/2026

2026/11192 ~ Complete ~54:YEAST STRAINS PRODUCING HIGH LEVELS OF HYDROGEN SULPHIDE ~71:CARLSBERG A/S, J.C. Jacobsens Gade 1, Denmark ~72: ATHANASOPOULOS, Helena da Silva;GOJKOVIC, Zoran;HARHOLT, Jesper;KATZ, Michael;LENGELER, Klaus;MALINA, Carl Gustav Anton;MOELLER-HANSEN, Iben;SEVILLA, Manuel Ernesto Arreola;VILANDT, Rikke Uhre~ 33:EP ~31:24184575.9 ~32:26/06/2024

2026/11172 ~ Provisional ~54:M&S_FOR_AUTOMATED_POS_AGNOSTIC_TRANSACTIONS.PDF ~71:Angus Pohl, 334 Mint Avenue, South Africa ~72: Angus Pohl~

2026/11179 ~ Complete ~54:SYSTEM AND METHOD FOR REAL-TIME PREVENTION OF FRAUD, WASTE, AND ABUSE IN HEALTH CLAIMS USING REAL-TIME TRANSACTION SWITCHING, BIOMETRIC IDENTITY VERIFICATION, AND PREDICTIVE ANALYTICS ~71:NEW SHAMROCK HOLDINGS (PRIVATE) LIMITED, 33 Craster Road, Southerton, Harare, Zimbabwe ~72: NAIK, Suketu~ 33:AP ~31:AP/U/2026/000295 ~32:30/04/2026

2026/11184 ~ Complete ~54:COMMUNICATION OF IN-DEVICE COEXISTENCE (IDC) UNAVAILABILITY PERIOD INFORMATION ~71:OFINNO, LLC, 1950 Opportunity Way, Suite 1200, Reston, Virginia 20190, United States of America ~72: BAYKAS, Tuncer;DINAN, Esmael Hejazi;ERKUCUK, Serhat;KIM, Jeongki;LANANTE, Leonardo Alisasis;ZHANG, Jiayi~ 33:US ~31:63/639,790 ~32:29/04/2024

2026/11190 ~ Complete ~54:A METHOD FOR RECOVERING IRON AND TITANIUM FROM VANADIUM-TITANIUM MAGNETITE ~71:PANGANG GROUP MINING CO., LTD., Guaziping, East District, PANZHIHUA 617063, SICHUAN, CHINA (P.R.C.), People's Republic of China ~72: HU, Fangqiang;HU, Houqin;LI, Jin;LI, Lin;WANG, Hongbin;WANG, Jianping;WANG, Renfu;WANG, Yong;WU, Xuehong;XIAO, Liangchu;ZHANG, Chun;ZHANG, Guohua~ 33:CN ~31:202511827845.2 ~32:05/12/2025

ASSIGNMENTS IN TERMS OF SECTION 60-REGULATIONS 58-60 AND 64 (1)

Application Number	Assignor	Assignee
2019/06822	IKENA ONCOLOGY, INC.	PAHR THERAPEUTICS, INC.
2003/08338	WI-LAN INC.	QUARTERHILL INC.
2003/08338	QUARTERHILL INC.	WI-LAN INC.
2026/07406	BOT BUILDERS (PTY) LTD	BRIERS, PIERRE, FRANCOIS, MELCHIOR
2019/03462	GLOBAL TECHNOLOGIES LLC	THE DOW CHEMICAL COMPANY
2019/03462	THE DOW CHEMICAL COMPANY	DDP SPECIALITY ELECTRONIC MATERIALS US INC.
2019/03462	ROHM AND HAAS COMPANY	DDP SPECIALITY MATERIALS US 8, LLC
2018/06406	DOW GLOBAL TECHNOLOGIES LLC	THE DOW CHEMICAL COMPANY
2018/06406	THE DOW CHEMICAL COMPANY	DDP SPECIALITY ELECTRONIC MATERIALS US, INC.
2026/06919	BOT BUILDERS (PTY) LTD	BRIERS, PIERRE, FRANCOIS, MELCHIOR
2013/04131	YARA INTERNATIONAL ASA	URALKILE TRADING SIA

Application Number	Assignor	Assignee
2013/05546	YARA INTERNATIONAL ASA	URALKILE TRADING SIA
2013/04489	YARA INTERNATIONAL ASA	URALKILE TRADING SIA
2016/00473	STAT-DX	QIAGEN GMBH
2025/09942	HENAN UNIVERSITY OF URBAN CONSTRUCTION	HUNAN CHANGXIN SURVEY AND DESIGN CO.,LTD.
2016/00908	QUEEN'S UNIVERSITY BELFAST	CHROMADEX, INC.
2025/05253	HENAN UNIVERSITY OF URBAN CONSTRUCTION	HENAN CHENGGONG ENVIRONMENTAL PROTECTION TECHNOLOGY CO., LTD.
2023/06318	HENAN UNIVERSITY OF URBAN CONSTRUCTION	PINGDINGSHAN SHENGJIE ENVIRONMENTAL PROTECTION TECHNOLOGY CO., LTD.
2025/09353	HENAN UNIVERSITY OF URBAN CONSTRUCTION	HENAN ZHONGGUAN WAIYE CONSTRUCTION ENGINEERING CO., LTD.
202210931	BEYLEFELD, BAREND JACOBUS	ORE RESOURCE CONSULTANTS LTD
2018/02303	SAMYANG HOLDINGS CORPORATION	SAMYANG BIOPHARM CORPORATION
2018/02315	QUEEN'S UNIVERSITY BELFAST	CHROMADEX, INC.
2021/00254	BEYLEFELD, BAREND JACOBUS	AZMET TECHNOLOGY AND PROJECTS (PTY) LIMITED
2019/08388	TRISHA ANSTALT, VADUZ, FL	FRANCO PAGANI
2025/09206	HENAN UNIVERSITY OF URBAN CONSTRUCTION and ZHENGZHOU UNIVERSITY OF TECHNOLOGY	HENAN KANGGUL NEW MATERIALS TECHNOLOGY CO., LTD.
2023/06554	HENAN UNIVERSITY OF URBAN CONSTRUCTION	JIAXIAN SHENBAOZHENGFA CERAMICS CO., LTD.
2025/05360	HENAN UNIVERSITY OF URBAN CONSTRUCTION	HENAN PUYAN ENTERPRISE MANAGEMENT CONSULTING CO., LTD.
2008/02200	ANTONIO MANUEL DE VEIGA MARTINS	ANTONIO MANUEL DE VEIGA MARTINS, VINESH SINGH and ALBERTUS VENTER
2021/01270	ANTONIO MANUEL DE VEIGA MARTINS	ANTONIO MANUEL DE VEIGA MARTINS, VINESH SINGH and ALBERTUS VENTER
2013/01331	ABBVIE IRELAND UNLIMITED COMPANY	ABBVIE MANUFACTURING MANAGEMENT UNLIMITED COMPANY
2013/01331	ABBVIE MANUFACTURING MANAGEMENT UNLIMITED COMPANY ABBVIE	ABBVIE MANUFACTURING MANAGEMENT UNLIMITED COMPANY, GENTECH, INC. and THE WALTER AND ELIZE HALL INSTITUTE OF MEDICAL RESEARCH
2016/06202	CRACKERTOA LIMITED	GLENART TRADING (PTY) LTD
2025/09628	HENAN UNIVERSITY OF URBAN CONSTRUCTION	Zhengzhou Changjian Engineering Research and Development Co., Ltd.
2025/03485	HENAN UNIVERSITY OF URBAN CONSTRUCTION	Luoyang Luocheng Wen Di Culture Communication Co., Ltd.
2025/10638	HENAN UNIVERSITY OF URBAN CONSTRUCTION	Henan Yingrui Engineering Technology Co., Ltd.
2025/02504	HENAN UNIVERSITY OF URBAN CONSTRUCTION	Henan Jiayunda Intelligent Technology Co., Ltd.
2024/02358	HENAN UNIVERSITY OF URBAN CONSTRUCTION	Henan Zhilong Biotechnology Co., Ltd.
2025/10544	HENAN UNIVERSITY OF URBAN CONSTRUCTION	Yuming Construction Engineering Group Co., Ltd.

Application Number	Assignor	Assignee
2025/03399	HENAN UNIVERSITY OF URBAN CONSTRUCTION	Pingdingshan Guangyuntong Engineering Co., Ltd.
2025/10087	HENAN UNIVERSITY OF URBAN CONSTRUCTION	Henan Hengfang Engineering Consulting Co., Ltd.
2025/01484	HENAN UNIVERSITY OF URBAN CONSTRUCTION	Henan Haizhitian New Energy Technology Co., Ltd.
2026/00249	HENAN UNIVERSITY OF URBAN CONSTRUCTION	Henan Haizhitian New Energy Technology Co., Ltd.
202511062	HENAN UNIVERSITY OF URBAN CONSTRUCTION	Henan Jiayunda Intelligent Technology Co., Ltd.
2025/00082	HENAN UNIVERSITY OF URBAN CONSTRUCTION	Zhengzhou Changjian Engineering Research and Development Co., Ltd.
2025/09946	HENAN UNIVERSITY OF URBAN CONSTRUCTION	Jiangsu Jusheng Electrical Technology Co., Ltd.
2025/10089	HENAN UNIVERSITY OF URBAN CONSTRUCTION	Henan Hengfang Engineering Consulting Co., Ltd.
2026/00621	HENAN UNIVERSITY OF URBAN CONSTRUCTION	Zhengzhou Huarui Engineering Consulting Co., Ltd.
2025/03950	HENAN UNIVERSITY OF URBAN CONSTRUCTION	Luoyang Luocheng Wen Di Culture Communication Co., Ltd.
2025/00528	HENAN UNIVERSITY OF URBAN CONSTRUCTION	Zhengzhou Huarui Engineering Consulting Co., Ltd.
2025/03402	HENAN UNIVERSITY OF URBAN CONSTRUCTION	Shaanxi Zhongyuan Construction Engineering Co., Ltd.
2025/00630	HENAN UNIVERSITY OF URBAN CONSTRUCTION	Zhengzhou Huarui Engineering Consulting Co., Ltd.
2025/03400	HENAN UNIVERSITY OF URBAN CONSTRUCTION	Shaanxi Zhongyuan Construction Engineering Co., Ltd.
2025/08745	HENAN UNIVERSITY OF URBAN CONSTRUCTION	Henan Hengfang Engineering Consulting Co., Ltd.
2011/08616	AbbVie Manufacturing Management Unlimited Company	Genentech, Inc. and The Walter and Eliza Hall Institute of Medical Research
2025/08294	CXS Therapeutics	SAPPIENS
2023/05722	HENAN UNIVERSITY OF URBAN CONSTRUCTION	Lushan County Donghai Breeding Co., Ltd.
2014/07126	AbbVie Manufacturing Management Unlimited Company	Genentech, Inc. and The Walter and Eliza Hall Institute of Medical Research
2017/08004	Castrol Limited	BP p.l.c.
2018/06320	Apnimed, Inc.	Shionogi & Co., Ltd.
2024/03638	Apnimed, Inc.(Delaware)	Shionogi & Co., Ltd.
2012/05694	ENT Co., Ltd and Dohwa Engineering Co., Ltd.	Dohwa Engineering Co., Ltd.
2013/08023	QUE, Qiudeng and NICHOLL, David	Syngenta Participations AG
2013/01080	Syngenta Participations AG	Syngenta Crop Protection AG(merger)
2011/06793	Syngenta Participations AG	Syngenta Crop Protection AG(merger)
2010/08689	Syngenta Participations AG	Syngenta Crop Protection AG(merger)
2009/05234	Syngenta Participations AG	Syngenta Crop Protection AG(merger)
2016/01788	Syngenta Participations AG	Syngenta Crop Protection AG(merger)
2016/02116	Syngenta Participations AG	Syngenta Crop Protection AG(merger)
2009/02728	Syngenta Participations AG	Syngenta Crop Protection AG(merger)
2011/06483	Syngenta Participations AG	Syngenta Crop Protection AG(merger)

Application Number	Assignor	Assignee
2013/00545	Syngenta Participations AG	Syngenta Crop Protection AG(merger)
2010/08688	Syngenta Participations AG	Syngenta Crop Protection AG(merger)
2013/08023	Syngenta Participations AG	Syngenta Crop Protection AG(merger)
2021/02498	Syngenta Participations AG	Syngenta Crop Protection AG(merger)
2013/06396	Syngenta Participations AG	Syngenta Crop Protection AG(merger)
2014/06203	Syngenta Participations AG	Syngenta Crop Protection AG(merger)
2011/03992	Syngenta Participations AG	Syngenta Crop Protection AG(merger)
2009/09166	Syngenta Participations AG	Syngenta Crop Protection AG(merger)
2009/08478	Syngenta Participations AG	Syngenta Crop Protection AG(merger)
2016/03860	ALSTOM HOLDINGS	KB SIGNALING INC.
2024/05599	Truck Accessories Group, LLC d/b/a Leer Group	May 1 Holdings, LLC
2021/00166	ATG 20 S.R.L.	FARMIGEA S.p.A.
2024/08839	ITM ONCOLOGICS GMBH	LUMARA BIO ONCOLOGICS GMBH
2025/09862	VOESTALPINE STAHL GMBH	WELLDUN GMBH
2025/09852	VOESTALPINE STAHL GMBH	WELLDUN GMBH
2025/09859	VOESTALPINE STAHL GMBH	WELLDUN GMBH
2025/08040	SPECIALISED LOGISTICAL SOLUTIONS (PTY) LTD	EXPLOTEK BLAST SOLUTIONS (PTY) LTD
2016/01318	ALSTOM HOLDINGS	KB SIGNALING INC.
2024/02355	Wenzhou Polytechnic	Wenzhou Welmei Hardware Co., Ltd.
2024/02356	Wenzhou Polytechnic	Wenzhou Welmei Hardware Co., Ltd.
2016/00022	Fumedica AG and Universität Bern	Pitengo GmbH
2024/02354	Wenzhou Polytechnic	Wenzhou Welmei Hardware Co., Ltd.
2022/13057	SHANDONG MOLONG PETROLEUM MACHINERY CO., LTD.	SHOUGUANG MAOLONG NEW MATERIAL TECHNOLOGY DEVELOPMENT CO., LTD.
2023/03347	SHANDONG MOLONG PETROLEUM MACHINERY CO., LTD.	SHOUGUANG MAOLONG NEW MATERIAL TECHNOLOGY DEVELOPMENT CO., LTD.
2022/13058	SHANDONG MOLONG PETROLEUM MACHINERY CO., LTD.	SHOUGUANG MAOLONG NEW MATERIAL TECHNOLOGY DEVELOPMENT CO., LTD.
2022/13056	SHANDONG MOLONG PETROLEUM MACHINERY CO., LTD.	SHOUGUANG MAOLONG NEW MATERIAL TECHNOLOGY DEVELOPMENT CO., LTD.
2022/02431	OnCOUR Pharma, Inc.	Cour Pharmaceuticals Development Co., Inc.
2021/00596	OnCOUR Pharma, Inc.	Cour Pharmaceuticals Development Co., Inc.
2011/00657	Commonwealth Scientific and Industrial Research Organisation	Gallagher eShepherd Pty Ltd
2022/12179	Berlin Cures GmbH	APTA Therapeutics GmbH
2023/09185	Berlin Cures GmbH	APTA Therapeutics GmbH
2024/04293	Synnovation Therapeutics, Inc.	ParVation Therapeutics, LLC
2025/03905	HENAN UNIVERSITY OF URBAN CONSTRUCTION AND JING ‘AN (HENAN) NEW ENERGY TECHNOLOGY DEVELOPMENT CO., LTD	Zhengzhou Fengrui Grinding Technology Co., Ltd.
2025/03947	HENAN UNIVERSITY OF URBAN CONSTRUCTION AND JING ‘AN (HENAN) NEW ENERGY	Zhengzhou Fengrui Grinding Technology Co., Ltd.

Application Number	Assignor	Assignee
	TECHNOLOGY DEVELOPMENT CO., LTD	
2025/07471	JIANGSU INIVERSITY OF TECHNOLOGY	JIANGSU AMBASSADOR TONGFENG CAOATING CO., LTD
2025/11058	HENAN UNIVERSITY OF URBAN CONSTRUCTION	Zhengzhou Fengrui Grinding Technology Co., Ltd.
2026/00086	HENAN UNIVERSITY OF URBAN CONSTRUCTION	Yuming Construction Engineering Group Co., Ltd.
2026/02313	WAVE LIFE SCIENCES LTD	WAVE LIFE SCIENCES, INC.
2019/03470	Berlin Cures GmbH	APTA Therapeutics GmbH
	HENAN UNIVERSITY OF URBAN CONSTRUCTION	Shaanxi Kunyou Electronic Technology Co., Ltd.
2025/08597	HENAN UNIVERSITY OF URBAN CONSTRUCTION	Zhengzhou Jinyuan Biotechnology Co., Ltd.
2016/04919	WAVE LIFE SCIENCES LTD	WAVE LIFE SCIENCES, INC.
2025/09440	HENAN UNIVERSITY OF URBAN CONSTRUCTION	Tianjin Woxiang Technology Co., Ltd.
2025/09992	No. Third Engineering Co., Ltd of CCCC First Highway Engineering Co., Ltd.	China First Highway Engineering Co., Ltd.
2025/09529	HENAN UNIVERSITY OF URBAN CONSTRUCTION	Tianjin Woxiang Technology Co., Ltd.
2026/00401	HENAN UNIVERSITY OF URBAN CONSTRUCTION	Beijing Jingzhi Yuntu Information Technology Co., Ltd.
2026/00467	HENAN UNIVERSITY OF URBAN CONSTRUCTION	Beijing Jingzhi Yuntu Information Technology Co., Ltd.
2025/10035	HENAN UNIVERSITY OF URBAN CONSTRUCTION; Luoyang Longmen Tourism Group Co., Ltd., Luoyang Jinjian Engineering Quality Testing Center Co., Ltd.,ZhengZhou Road And Bridge Construction Investment Group Co., Ltd., Henan Third Geological Exploration Institute Co., Ltd., Mineral Resources Exploration Center of Henan Geological Burea., Luanchuan Longyu Molybdenum Industry Co., Ltd.	Henan Qianglin Survey Co., Ltd
2026/00701	HENAN UNIVERSITY OF URBAN CONSTRUCTION	Henan Senyang Electric Co., Ltd.
2026/00705	HENAN UNIVERSITY OF URBAN CONSTRUCTION	Henan Senyang Electric Co., Ltd.
2023/03370	FORTUNE WALLET LABS INC.	KLIX DIGITAL LLC
2026/02032	EASYPATENT LIMITED LIABILITY COMPANY	KRAVCHENKO, Artem Aleksandrovich
2026/01762	Henan University of Urban Construction	Weiyang Sports Goods Store, Urban-Rural Integration Demonstration Zone, Pingdingshan City
2026/00252	HENAN UNIVERSITY OF URBAN CONSTRUCTION	Zhengzhou Xuanyuan Biotechnology Co., Ltd.

Application Number	Assignor	Assignee
2026/00122	Henan University of Urban Construction	Henan Qianglin Survey Co., Ltd
2025/09261	EXO OUTDOOR (PTY) LTD	WARREN FERNANDES
2021/010159	QINGDAO MDI TECH CO., LTD.	DGI TECH (QING DAO) CO., LIMITED
2017/08664	Lifting Point Pre-Form Pty Limited	InQuik IP Holdings Pty Ltd
2026/02031	EASYPATENT LIMITED LIABILITY COMPANY	KRAVCHENKO, Artem Aleksandrovich
2026/02028	EASYPATENT LIMITED LIABILITY COMPANY	KRAVCHENKO, Artem Aleksandrovich
2026/00111	Henan University of Urban Construction	Henan Qiangnai New Materials Co., Ltd.
2026/00109	Henan University of Urban Construction	Henan Qiangnai New Materials Co., Ltd.
2026/00078	Henan University of Urban Construction	Henan Qiangnai New Materials Co., Ltd.
2026/02033	EASYPATENT LIMITED LIABILITY COMPANY	KRAVCHENKO, Artem Aleksandrovich
2026/04275	FOURIE, Eugene	TEQNOVO PTY LTD
2018/02494	F. Hoffmann-La Roche AG	OHB Pediatrics Ltd.
2020/02483	Saipem S.A.	SAIPEM OFFSHORE FRANCE S.A.(MERGER)
2022/12716	Saipem S.A.	SAIPEM OFFSHORE FRANCE S.A.(MERGER)
2025/10966	Saipem S.A.	SAIPEM OFFSHORE FRANCE S.A.(MERGER)
2024/00687	Saipem S.A.	SAIPEM OFFSHORE FRANCE S.A.(MERGER)

CHANGE OF NAME IN TERMS OF REGULATION 39

Application Number	In the name of	New name
2026/08555	IX BIOPHARMA LIMITED	IX BIOPHARMA PTY LTD
2016/04177	GENESYS TELECOMMUNICATION LABORATORIES, INC.	GENESYS CLOUD SERVICES, INC.
2019/03462	DDP SPECIALITY ELECTRONIC MATERIALS US, INC.	DDP SPECIALITY ELECTRONIC MATERIALS US, LLC
2018/06406	DDP SPECIALITY ELECTRONIC MATERIALS US, INC.	DDP SPECIALITY ELECTRONIC MATERIALS US, LLC
2025/05330	EG 427	CYLLENE THERAPEUTICS
2025/11021	EG 427	CYLLENE THERAPEUTICS
2025/07549	MULTITUDE THERAPEUTICS INC.	MULTITUDE THERAPEUTICS CO., LTD.
2023/06999	ITM ONCOLOGICS GMBH	LUMARA BIO ONCOLOGICS GMBH
2016/02867	BRENTWOOD ELECTRONICS CC t/a MONITECH MINING MONITORING SYSTEMS	BRENTWOOD ELECTRONICS (PTY) LTD t/a MONITECH MINING MOBITORING SYSTEMS
2026/02752	EG 427	CYLLENE THERAPEUTICS
2015/08712	FibroGen, Inc	Kyntra Bio, Inc.

Application Number	In the name of	New name
2018/08645	Schenck Process Europe Gmbh	Qlar Europe Gmbh
2015/00664	FibroGen, Inc	Kyntra Bio, Inc.
2026/00458	GALLERY OF GREENS	GALLERY OF GREENS INVESTMENT HOLDINGS (PTY) LTD
2024/05599	Leer Group	Truck Accessories Group, LLc d/b/a Leer Group
2015/00782	FibroGen, Inc	Kyntra Bio, Inc.
2023/10485	ALETHIA BIOTHERAPEUTICS ULC	Alethia Biotherapeutics Inc.
2023/10678	ALETHIA BIOTHERAPEUTICS ULC	Alethia Biotherapeutics Inc.
2023/10862	ALETHIA BIOTHERAPEUTICS ULC	Alethia Biotherapeutics Inc.
2024/04293	ParVation Therapeutics, LLC	ParVation Therapeutics, Inc.
2024/06043	ALETHIA BIOTHERAPEUTICS ULC	Alethia Biotherapeutics Inc.
2025/02224	Primient Covation LLC	Primary Products BioPDO LLC
2026/06484	ALETHIA BIOTHERAPEUTICS ULC	Alethia Biotherapeutics Inc.
2026/08554	IX Biopharma Limited	IX Biopharma Pty Ltd
2025/11005	Roche Innovation Center Copenhagen A/S	RICC A/S
2020/04947	Roche Innovation Center Copenhagen A/S	RICC A/S
2020/04948	Roche Innovation Center Copenhagen A/S	RICC A/S
2025/11007	Roche Innovation Center Copenhagen A/S	RICC A/S
2020/03808	Dizal (Jiangsu) Pharmaceutical Co., Ltd	Dizal Pharmaceutical Co., Ltd.
2024/00122	Dizal (Jiangsu) Pharmaceutical Co., Ltd	Dizal Pharmaceutical Co., Ltd.
2021/05708	Dizal (Jiangsu) Pharmaceutical Co., Ltd	Dizal Pharmaceutical Co., Ltd.

PATENT LICENSES IN TERMS OF SECTION 60-REGULATIONS 58-60 AND 64

No records available

PATENT APPLICATIONS ABANDONED OR WITHDRAWN

Application Number	Not Open	Date
2025/06379	WITHDRAWN	18/09/2026

APPLICATION FOR RESTORATION OF A LAPSED PATENT UNDER SECTION 47 OF THE PATENT ACT

THE PATENTS ACT, No. 57 OF 1978

Notice is hereby given that **RIFENG ENTERPRISE (FOSHAN) CO.LTD AND RIFENG ENTERPRISE GROUP Co.Ltd,** whose address for service is **EDWARD NATHAN SONNENBERGS Inc, SANDTON** has applied to the registrar for the restoration of Patent No **2021/03405** entitled **SEALING STRUCTURE** dated **05/06/2020**, which lapsed on **05/06/2025** owing to the non-payment of the prescribed renewal fee.

Any person may oppose the restoration of the patent by lodging form P19 within two months of the date of this advertisement.

Notice is hereby given that **FEDERAL STATE BUDGETARY INSTITUTION "NATIONAL RESEARCH CENTRE FOR EPIDEMIOLOGY AND MICROBIOLOGY NAMED AFTER THE HONORARY ACADEMICIAN N.F. GAMALEYA" OF THE MINISTRY OF HEALTH OF THE RUSSIAN FEDERATION,** whose address for service is **SMIT & VAN WYK. Inc, PRETORIA** has applied to the registrar for the restoration of Patent No **2022/02321** entitled **PHARMACEUTICAL AGENT FOR INDUCING SPECIFIC IMMUNITY AGAINST SARS-COV-2** dated **09/11/2020**, which lapsed on **09/11/2024** owing to the non-payment of the prescribed renewal fee.

Any person may oppose the restoration of the patent by lodging form P19 within two months of the date of this advertisement.

Notice is hereby given that **FEDERAL STATE BUDGETARY INSTITUTION "NATIONAL RESEARCH CENTRE FOR EPIDEMIOLOGY AND MICROBIOLOGY NAMED AFTER THE HONORARY ACADEMICIAN N.F. GAMALEYA" OF THE MINISTRY OF HEALTH OF THE RUSSIAN FEDERATION,** whose address for service is **SMIT & VAN WYK. Inc, PRETORIA** has applied to the registrar for the restoration of Patent No **2022/02985** entitled **AGENT FOR INDUCTION OF SPECIFIC IMMUNITY AGAINST SEVERE ACUTE RESPIRATORY SYNDROME CORONAVIRUS (SARS-COV-2) IN LYOPHILIZED FORM (VERSIONS)** dated **30/04/2021**, which lapsed on **30/04/2024** owing to the non-payment of the prescribed renewal fee.

Any person may oppose the restoration of the patent by lodging form P19 within two months of the date of this advertisement.

Notice is hereby given that **FEDERAL STATE BUDGETARY INSTITUTION "NATIONAL RESEARCH CENTRE FOR EPIDEMIOLOGY AND MICROBIOLOGY NAMED AFTER THE HONORARY ACADEMICIAN N.F. GAMALEYA" OF THE MINISTRY OF HEALTH OF THE RUSSIAN FEDERATION,** whose address for service is **SMIT & VAN WYK. Inc, PRETORIA** has applied to the registrar for the restoration of Patent No **2022/02986** entitled **AGENT FOR INDUCTION OF SPECIFIC IMMUNITY AGAINST SEVERE ACUTE RESPIRATORY SYNDROME CORONAVIRUS (SARS-COV-2) IN LIQUID FORM (VERSIONS)** dated **30/04/2021**, which lapsed on **30/04/2024** owing to the non-payment of the prescribed renewal fee.

Any person may oppose the restoration of the patent by lodging form P19 within two months of the date of this advertisement.

Notice is hereby given that **FEDERAL STATE BUDGETARY INSTITUTION "NATIONAL RESEARCH CENTRE FOR EPIDEMIOLOGY AND MICROBIOLOGY NAMED AFTER THE HONORARY ACADEMICIAN N.F. GAMALEYA" OF THE MINISTRY OF HEALTH OF THE RUSSIAN FEDERATION,** whose address for service is **SMIT & VAN WYK. Inc, PRETORIA** has applied to the registrar for the restoration of Patent No **2022/02322** entitled **EXPRESSION VECTOR AGAINST SEVERE ACUTE RESPIRATORY SYNDROME VIRUS SARS-COV 2** dated **06/11/2020**, which lapsed on **06/11/2024** owing to the non-payment of the prescribed renewal fee.

Any person may oppose the restoration of the patent by lodging form P19 within two months of the date of this advertisement.

Notice is hereby given that **DE VILLIERS, INNES and DE VILLIERS, PAUL FRANCOIS.** whose address for service is **Kisch Africa Inc, PRETORIA** has applied to the registrar for the restoration of Patent No **2021/01316** entitled **A FLOAT** dated **26/02/2021**, which lapsed on **26/02/2024** owing to the non-payment of the prescribed renewal fee.

Any person may oppose the restoration of the patent by lodging form P19 within two months of the date of this advertisement.

VOLUNTARY SURRENDER OF A PATENT UNDER SECTION 64 (1), REGULATION 67 OF THE ACT

THE PATENTS ACT, No. 57 OF 1978

Notice is hereby given that **CHINA AGRICULTURAL UNIVERSITY., No 2 Yuanmingyuan West Road, HaiDian District, Beijing, 100193, CHINA** has offered to surrender South African Patent No: **2026/03700** South African Patent No: **2026/03700** is deemed to be revoked as of **29/10/2026.**

Any person may give notice of opposition to the voluntary surrender of the patent within two months of the advertisement hereof.

APPLICATION FOR CORRECTION IN TERMS OF SECTION 50

Applicant: **AMGEN INC. One Amgen Center Drive, THOUSAND OAKS 91320-1799, CA, United States of America** Request permission to correct or to amend any patent, application for a patent or document lodged in pursuance of such application or in the register of Patent no: **2020/03424** a filing date **of 08/06/2020** Entitled: **CONTINUOUS MANUFACTURING PROCESS FOR BISPECIFIC ANTIBODY PRODUCTS.**

A copy of the original application on which the proposed correction or amendment is indicated in red, is now available for inspection at the Patent Office.

Any notice of opposition (on form no. 19) must be lodged at the Patent Office within 2 months from the date hereof.

Registrar of Patents

APPLICATIONS TO AMEND SPECIFICATION

THE PATENTS ACT, 1978

Applicant: NOKIA TECHNOLOGIES OY KARAPORTTI 3, 02610 ESPOO. Permission to amend the specification of letters patent no: **2014/04007** of **02/06/2014** for **METHOD FOR VIDEO CODING AND AN APPARATUS.**

A copy of the original specification on which the proposed amendment is indicated in red, is now available for public inspection at the Patent Office.

Any notice of opposition (on Patent Form 19) must be lodged at the Patent Office within two months from the date hereof.

Registrar of Patents

Applicant: UNIVERSITY OF HELSINKI P.O. Box 4 (Yliopistonkatu 3) 00014 University of Helsinki. Permission to amend the specification of letters patent no: **2022/10302** of **16/09/2022** for **BIOINFORMATICS.**

A copy of the original specification on which the proposed amendment is indicated in red, is now available for public inspection at the Patent Office.

Any notice of opposition (on Patent Form 19) must be lodged at the Patent Office within two months from the date hereof.

Registrar of Patents

Applicant: Novo Nordisk A/S Novo Allé, BAGSVÆRD DK-2880, DENMARK. Permission to amend the specification of letters patent no: **2015/07096** of **25/09/2015** for **ORAL DOSING OF GLP-1 COMPOUNDS**.

A copy of the original specification on which the proposed amendment is indicated in red, is now available for public inspection at the Patent Office.

Any notice of opposition (on Patent Form 19) must be lodged at the Patent Office within two months from the date hereof.

Registrar of Patents

INSPECTION OF SPECIFICATIONS

A complete specification may, after acceptance is advertised, be inspected during office hours at the Patent Office, Pretoria, at a charge of **R4, 00.** Please note, that in terms of section 43 (3) if the acceptance of an application which claims priority in terms of section 31 (1) (c) is not published in terms of section 42 within 18

months from the earliest priority claimed from the relevant application in a convention country, it shall be opened to public inspection after the expiration of 18 months from the earliest priority so claimed.

COPIES OF DOCUMENTS

The Patent Office, Private Bag X400, Pretoria, supplies copies of all patent and trade mark documents at the following rate:

Photocopies: **R1, 00 per page**

COMPLETE SPECIFICATIONS ACCEPTED AND ABRIDGEMENTS OR ABSTRACTS THEREOF

Complete specifications in respect of the under mentioned applications for letters Patent have been accepted by the Registrar of Patents.

THE PATENTS ACT, 1978 (ACT NO. 57 OF 1978)

In terms of section 42 (b) of the Patents Act, 1978, a patent shall be deemed to have been sealed and granted as from the date of publication of the acceptance.

The numerical references denote the following: **(21)** Number of application. **(22)** Date of application. **(43)** Date of acceptance. **(51)** Class. **(71)** Name of applicant(s). **(72)** Name of all inventors. **(33)** Country. **(31)** Number and **(32)** Date of convention application. **(54)** Title of invention. **(00)** Number of sheets.

Registrar of Patents

21: 2011/08185. 22: 2011/11/08. 43: 2026/10/20
51: B22F; E21B
71: SMITH INTERNATIONAL INC
72: BELNAP J DANIEL, YU FENG, ZHANG YOUHE, ZHAN GUODONG, CARIVEAU PETER T, SHEN YUELIN, VORONIN GEORGIY
33: US 31: 61/180,059 32: 2009-05-20
33: US 31: 61/322,149 32: 2010-04-08

54: CUTTING ELEMENTS, METHODS FOR MANUFACTURING SUCH CUTTING ELEMENTS, AND TOOLS INCORPORATING SUCH CUTTING ELEMENTS

00: -

The present disclosure relates to cutting elements incorporating polycrystalline diamond bodies used for subterranean drilling applications, and more particularly, to polycrystalline diamond bodies having a high diamond content which are configured to provide improved properties of thermal stability and wear resistance, while maintaining a desired degree of impact resistance, when compared to prior polycrystalline diamond bodies, hi various embodiments disclosed herein, a cutting element with high diamond content includes a modified PCD structure and/or a modified interface (between the PCD body and a substrate), to provide superior performance.

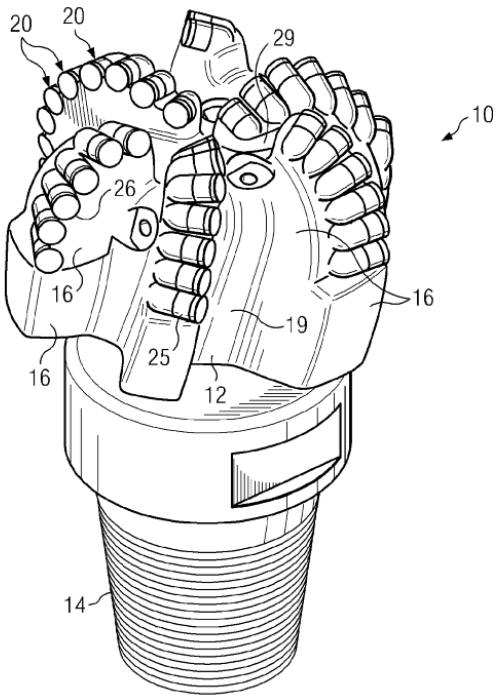

21: 2016/03828. 22: 2016/06/06. 43: 2026/09/16
51: A61M; F16K
71: ICU MEDICAL, INC.
72: NELSON, David
33: US 31: 61/914,892 32: 2013-12-11
54: CHECK VALVE
00: -
A check valve for use in a fluid pathway. The check valve may have a diaphragm and a plurality of supports extending from the diaphragm. The check valve and supports have a line of symmetry, and deformation of the check valve as it moves from a closed position to an opened position can be generally along the line of symmetry.

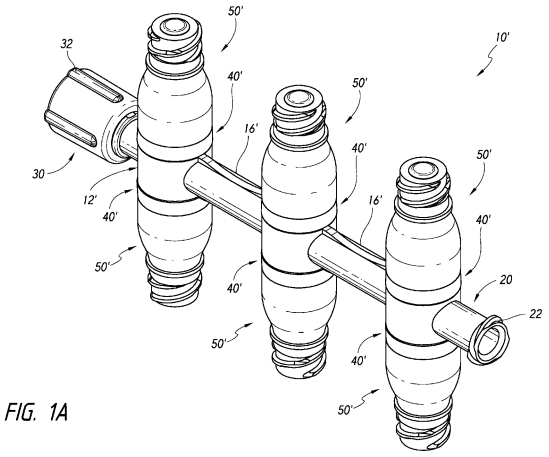

FIG. 1A

21: 2016/07126. 22: 2016/10/17. 43: 2026/10/20
51: G07D
71: MAGNETO IP HOLDINGS (PTY) LTD
72: ROBSON, Michael, Donald
33: ZA 31: 2015/04395 32: 2015-07-18
54: BANK NOTE PROTECTION
00: -
A protection device for an ATM which includes an ink-filled container which is broken, thereby to release the ink to stain bank notes, in response to an attack on the ATM, by introducing gas under pressure into the container at least at two locations inside the container.

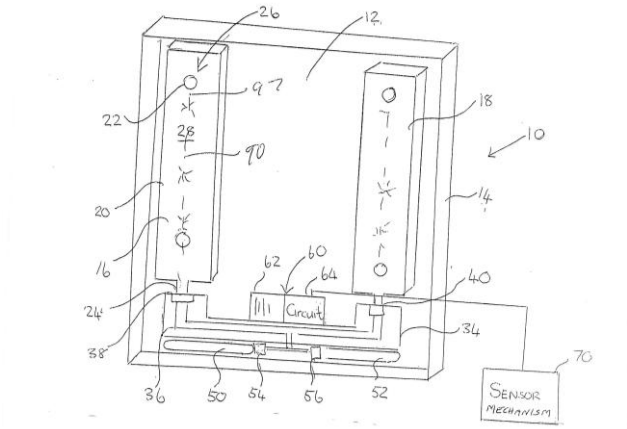

21: 2016/07387. 22: 2016/10/26. 43: 2026/09/18
51: B01D; C07K
71: Amgen Inc.
72: GEFROH, Eva, SCHWEICKART, Randolph W., PETTY, Krista, FRANK, Gregory, SALSTROM TERPSMA, Christine, HEWIG III, Arthur C., SHULTZ, Joseph Edward

33: US 31: 61/992,595 32: 2014-05-13
54: PROCESS CONTROL SYSTEMS AND METHODS FOR USE WITH FILTERS AND FILTRATION PROCESSES
00: -
Systems and methods used to control tangential flow filtration are provided, including control systems and methods for use with connected systems with upstream processing units, such as chromatography processing units, in fluid communication with a tangential flow filtration processing unit. Also included are control systems and methods for performing continuous concentration using single-pass tangential flow filtration with permeate flow control.

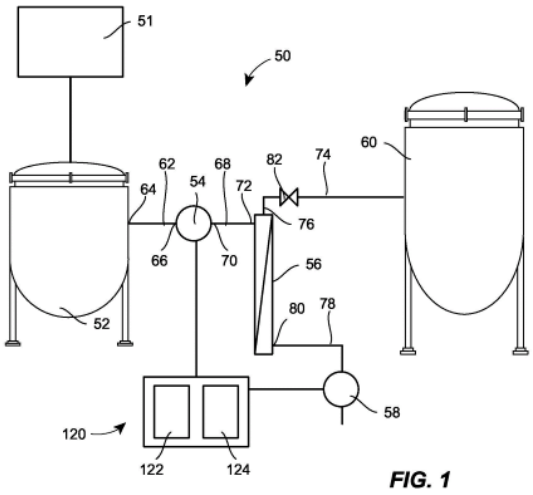

FIG. 1

21: 2017/03820. 22: 2017/06/02. 43: 2026/09/10
51: A61F; A61M
71: WORLDWIDE INNOVATIVE HEALTHCARE, INC.
72: ZUROVCIK, Danielle
33: US 31: 62/090,350 32: 2014-12-10
33: US 31: 62/090,437 32: 2014-12-11
33: US 31: 62/182,417 32: 2015-06-19
54: UNBACKED AND MODIFIABLE TAPES AND SKIN DRESSINGS
00: -
Tapes and methods including an unbacked construction of at least one liquid layer adhesive that has been at least one of dried and cured. Occlusive tissue dressings, tapes and methods including an elastomeric drape and, for backed drapes and some unbacked drapes, a liquid component, at least partially cross-linked at least after one of drying and curing, suitable for application at a dressing-to-skin interface in order to create a substantially air-tight seal. The same or a different liquid component may be applied by a user at a tube-to-dressing interface of an elastomeric drape to create a similar air-tight seal around the tube, if not occlusively sealed during its manufacture. Featured are unbacked tapes, a drape with liquid sealant component, a liquid layered drape with liquid sealant component, and a liquid layered drape

21: 2017/04319. 22: 2017/06/26. 43: 2026/10/14
51: C07K
71: CHECKMATE PHARMACEUTICALS, INC.
72: KRIEG, Arthur, M.
33: US 31: 62/098,568 32: 2014-12-31
33: US 31: 62/106,526 32: 2015-01-22
33: US 31: 62/118,165 32: 2015-02-19
54: COMBINATION TUMOR IMMUNOTHERAPY
00: -
Provided are methods for treating cancer using local administration of certain CpG oligonucleotides (CpG ODN) and systemic administration of a checkpoint inhibitor such as an anti-PD-1 antibody, an anti-PD-LI antibody, and/or an anti-CTLA-4 antibody. In preferred embodiments, the CpG ODN are selected based on their propensity to induce high amounts of interferon alpha (IFN-a) and T-cell activation relative to interleukin-10 (IL-10) and B-cell activation. In certain embodiments, the methods further include pretreatment with radiotherapy, to potentiate the combination immunotherapy.

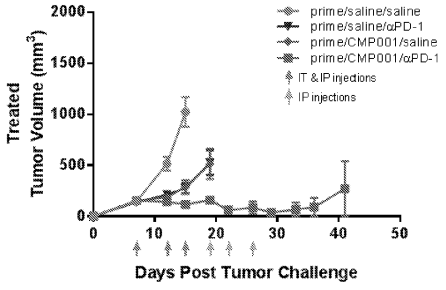

21: 2017/07614. 22: 2017/11/10. 43: 2026/10/20
51: G06F; G06Q
71: CLARA DIAMOND SOLUTIONS LIMITED PARTNERSHIP
72: ARIEL, Aaron, DIX, Dylan
33: US 31: 62/420,958 32: 2016-11-11

54: SYSTEMS AND METHODS FOR DISTRIBUTING ROUGH DIAMONDS

00: -

Embodiments of the present invention relate to diamond trading system and method for trading diamonds. The system and method may allow rough diamond sellers to list their diamonds for sale individually and enter an ask price for each listed diamond. The system and method may also allow rough diamond buyers to submit their polished diamond parameters and orders. The order may contain a bid price. The system and method may then determine if any of the listed diamonds match to the polished diamond parameters and ordering requirements and if any of the matched diamonds have a bid price at or higher than a ask price. If there is a match and the bid price is at or higher than the ask price, the system and method allow the transaction to proceed.

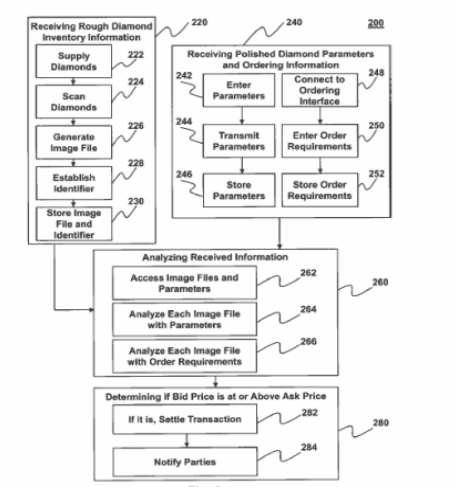

21: 2018/02437. 22: 2018/04/13. 43: 2019/10/29
51: H04W
71: NEC Corporation
72: ONISHI, Koji, TAMURA, Toshiyuki
33: JP 31: 2013-202034 32: 2013-09-27

54: COMMUNICATION SYSTEM, BASE STATION, COMMUNICATION METHOD, AND NON-TRANSITORY COMPUTER READABLE MEDIUM STORING PROGRAM

00: -

An object is to provide a communication system, a base station, a communication method, and a program capable of eliminating an effect caused by a sharp increase in the amount of traffic by a specific group of communication terminals on the quality of the other communication terminals. A communication system according to the present invention includes a communication terminal (40), and a node device (13) that selects a gateway device (11) that performs data communication with the communication terminal (40). Further, the communication system includes a base station (30) that selects the node device (13) based on an identifier included in a connection request message transmitted from the communication terminal (40).

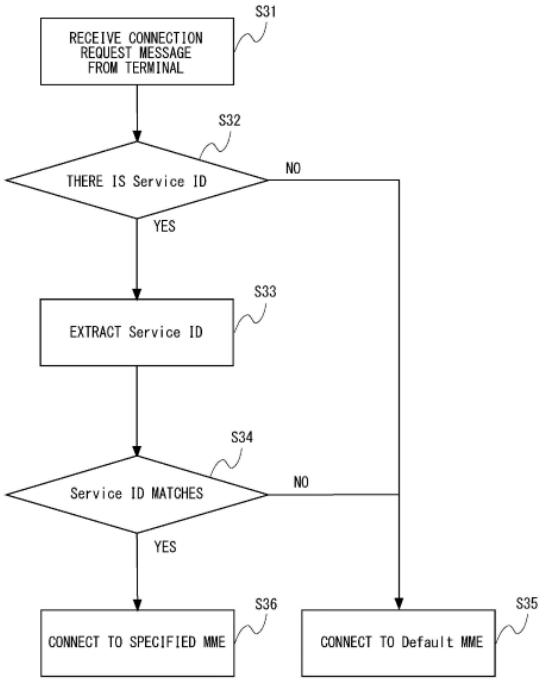

21: 2018/03632. 22: 2018/05/31. 43: 2026/09/08
51: C07K
71: Eisai R&D Management Co., Ltd.
72: SPIDEL, Jared, ALBONE, Earl
33: US 31: 62/269,138 32: 2015-12-18

54: C-TERMINAL LYSINE CONJUGATED IMMUNOGLOBULINS

00: -

Provided herein are conjugated immunoglobulins and methods for generating conjugated immunoglobulins using a microbial transglutaminase.

21: 2018/03650. 22: 2018/05/31. 43: 2026/09/16
51: E21B; B23P
71: SMITH INTERNATIONAL, INC.

72: BAO, Yahua, BELNAP, John Daniel, CARON, Gregory, YU, Feng, PENG, Cheng, FRANCE, Michael David, GARAN, Anatoliy, PARKER, John
33: US 31: 62/267,262 32: 2015-12-14
54: MECHANICAL LOCKING OF CUTTING ELEMENT WITH CARBIDE MATRIX
00: -
A cutting device for use in a drill bit has a body including an ultrahard material. The body has a top surface, a front surface, and at least one lateral surface adjacent the top surface. The lateral surface is oriented at a surface angle relative to the top surface between 30 and 150 degrees. One or more locking features are located on the lateral surface.

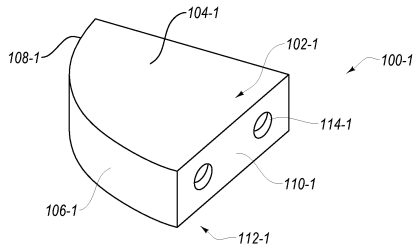

FIG. 1-1

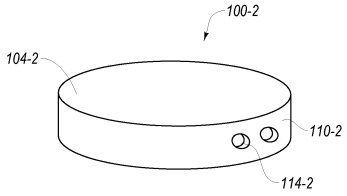

FIG. 1-2

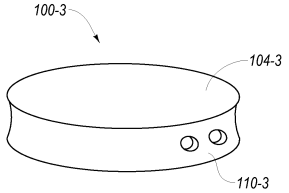

FIG. 1-3

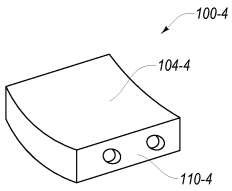

FIG. 1-4

21: 2018/04207. 22: 2018/06/22. 43: 2026/10/19
51: A61K; A61P
71: NUCANA PLC
72: KENNOVIN, Gordon, GRIFFITH, Hugh
33: GB 31: 1522764.8 32: 2015-12-23
54: FORMULATIONS OF PHOSPHORAMIDATE DERIVATIVES OF NUCLEOSIDE DRUGS
00: -
This invention relates to pharmaceutical formulations and formulation strategies of protides (phosphoramidate derivatives of nucleosides) and, in particular, protides useful in the treatment of cancer such as NUC-3373 (5-fluoro-2'-deoxyuridine-5'-0-[1-naphthyl (benzoxy-L-alaninyl)] phosphate) and NUC-7738 (3'-deoxyadenosine-5'-0 [phenyl(benzyloxy-L-alaninyl)] phosphate). In particular, the invention relates to formulations which comprise a polar aprotic solvent, for example dimethyl acetamide (DMA).

21: 2018/04392. 22: 2018/06/29. 43: 2026/09/07
51: H04W
71: Huawei Technologies Co., Ltd.
72: LI, Bingzhao, QUAN, Wei, ZHANG, Jian, LIU, Weihua
33: CN 31: PCT/CN2015/100336 32: 2015-12-31
54: MOBILITY MANAGEMENT METHOD, TERMINAL, AND BASE STATION
00: -
Disclosed in the embodiments of the present invention are a mobility management method, a user equipment, and a base station; said mobility management method may comprise: a user equipment (UE) in a connected state receiving a UE source identifier from a first base station; said source identifier being used for uniquely identifying said UE on a first base station; upon satisfying a low-overhead activation condition, the UE entering a low-overhead state; in said low-overhead state, the UE storing the connection context of the UE in the connected state, and residing, while moving, in a cell by means of cell reselection criteria; if a first preset condition is satisfied, then the UE reporting the source identifier to a second base station to which a second cell belongs, said second cell being the serving cell in which the UE currently resides. Using the present invention, a UE enters a low-overhead state, then autonomously performs mobility on the basis of cell reselection; only the position change information of the UE is reported, simplifying the handover process and conserving communications resources of a network device.

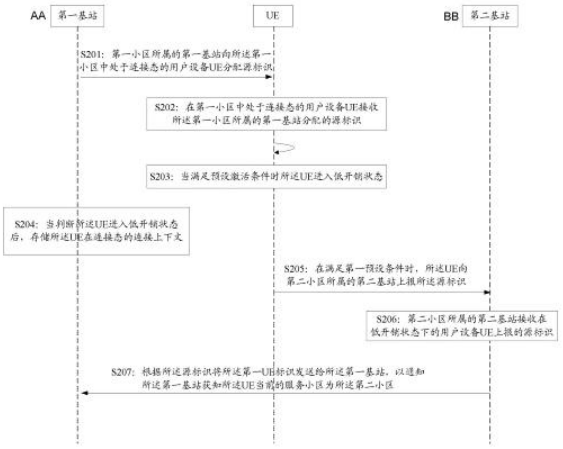

图 2

S201 First base station belonging to first cell allocates source identifier to UE in connected state in first cell
S202 UE in connected state in first cell receives source identifier allocated by first base station belonging to first cell
S203 When preset activation condition is satisfied, UE enters low-overhead state
S204 Upon determining that UE has entered low-overhead state, connection context of UE in connected state is stored
S205 If first preset condition is satisfied, then UE reports source identifier to second base station belonging to second cell
S206 Second base station belonging to second cell receives source identifier reported by UE in low-overhead state
S207 According to source identifier, first UE identifier is sent to first base station so as to notify first base station that current serving cell of UE is second cell
AA First base station
BB Second base station

21: 2018/05028. 22: 2018/07/26. 43: 2026/10/08
51: B62B
71: LOGAN COVE PTY LTD
72: WRIGHT, Geoffery
33: AU 31: 2017902937 32: 2017-07-26

54: TROLLEY WITH HEIGHT ADJUSTABLE SHELVES

00: -

A height adjustable shelf trolley comprises a mobile frame for supporting a plurality of shelves; a cover of the mobile frame; and a generally vertically circulating support mechanism for moving the shelves in a circulating manner so as to adjust the height of one of the shelves to a desired loading/unloading height which is level with an opening in the cover. The cover prevents access to the shelves other than through the opening. The generally vertically circulating support mechanism comprises two parallel loops connected by horizontal bars for the hanging of the shelves therefrom.

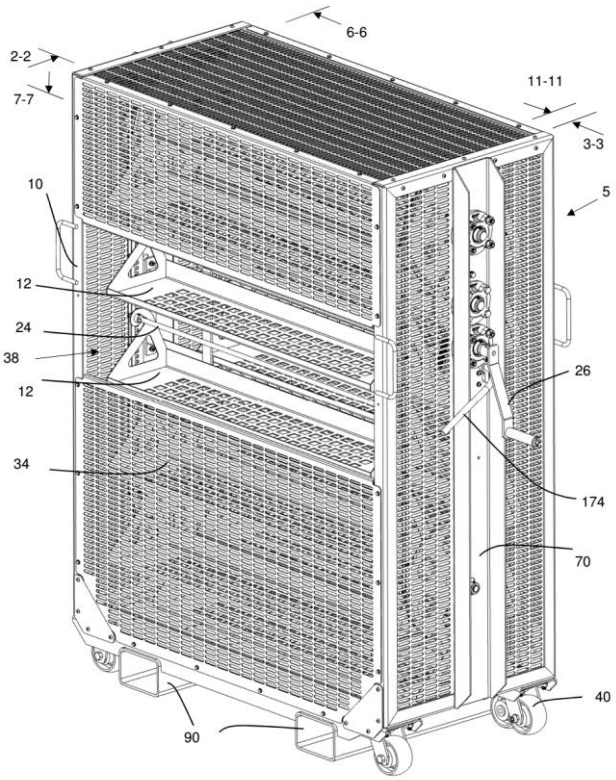

21: 2018/07658. 22: 2018/11/14. 43: 2026/08/27
51: B65D; C11D
71: The Procter & Gamble Company
72: COURCHAY, Florence Catherine, LABEQUE, Regine, FRIEDRICH, Steven George, LEE, David M., NII, Shinsuke, YEUNG, Lee Kon, YOGAN, Thomas, RENMANS, Marc Rene Bert
33: US 31: 62/349,635 32: 2016-06-13

54: WATER-SOLUBLE UNIT DOSE ARTICLES MADE FROM A COMBINATION OF DIFFERENT FILMS AND CONTAINING HOUSEHOLD CARE COMPOSITIONS

00: -

The present disclosure relates to pouches made from a combination of chemically different water-soluble films and containing household care compositions that are at least partially enclosed by the water-soluble films in at least one compartment.

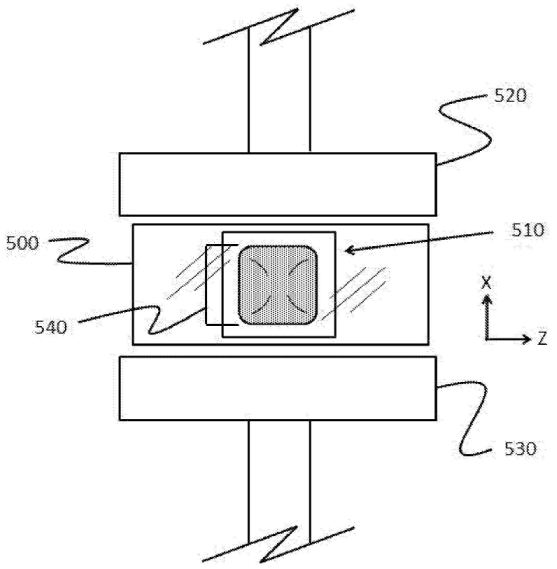

21: 2019/05472. 22: 2019/08/19. 43: 2026/09/01
51: C12Q
71: REGENERON PHARMACEUTICALS, INC.
72: ABUL-HUSN, NOURA S, GOTTESMAN, OMRI, LI, ALEXANDER, CHENG, XIPING, XIN, YURONG, GROMADA, JESPER, DEWEY, FREDERICK E, BARAS, ARIS, SHULDINER, ALAN
33: US 31: 62/449,335 32: 2017-01-23
33: US 31: 62/581,918 32: 2017-11-06
33: US 31: 62/472,972 32: 2017-03-17
54: HYDROXYSTEROID 17-BETA DEHYDROGENASE 13 (HSD17B13) VARIANTS AND USES THEREOF
00: -
Provided are compositions related to HSD17B13 variants, including nucleic acid molecules and polypeptides related to variants of HSD17B13, and cells comprising those nucleic acid molecules and polypeptides. Also provided are methods related to HSD17B13 variants. Such methods include methods for detecting the presence of the HSD17B13 rs72613567 variant in a biological sample comprising genomic DNA, for detecting the presence or levels of any one of variant HSD17B13 Transcripts C, D, E, F, G, and H, and particularly D, in a biological sample comprising mRNA or cDNA, or for detecting the presence or levels of any one of variant HSD17B13 protein Isoforms C, D, E, F, G, or H, and particularly D, in a biological sample comprising protein. Also provided are methods for determining a subject's susceptibility to developing a liver disease or of diagnosing a subject with liver disease.

21: 2019/05524. 22: 2019/08/21. 43: 2026/09/01
51: C12Q
71: REGENERON PHARMACEUTICALS, INC.
72: BRUSE, SHANNON, MCCARTHY, SHANE, BARAS, ARIS, DEWEY, FREDERICK, GOTTESMAN, OMRI
33: US 31: 62/485,077 32: 2017-04-13
54: TREATMENT AND INHIBITION OF INFLAMMATORY LUNG DISEASES IN PATIENTS HAVING RISK ALLELES IN THE GENES ENCODING IL33 AND IL1RL1
00: -
IL33 antagonists alone or in combination with IL-4R antagonists can be used to treat or inhibit eosinophilic asthma, eosinophilic COPD, eosinophilic ACOS, and nasal polyps in a subject having one or more risk alleles in the intronic IL1RL1 variant rs1420101, in the IL33 variant rs1342326, in both, or in variants in linkage disequilibrium thereof.

21: 2019/07261. 22: 2019/10/31. 43: 2026/09/21
51: A61K; C07K
71: Université Catholique de Louvain, argenx BV
72: VAN DER WONING, Sebastian, BORGIONS, Filip, DREIER, Torsten, MARIËN, Lore, DE BOECK, Gitte, LIÉNART, Stéphanie, LUCAS, Sophie, COULIE, Pierre
33: GB 31: 1707561.5 32: 2017-05-11
54: GARP-TGF-ß ANTIBODIES
00: -
The present invention relates to antibodies and antigen binding fragments thereof, which bind to a complex of GARP and TGF-ß1, particularly a complex of human GARP and human TGF-ß1. These antibodies and antigen binding fragments exhibit a combination of advantageous properties including high affinity antigen binding and the ability to inhibit the release of active TGF-ß from regulatory T cells. The antibodies and antigen binding fragments of the present invention are relatively resistant to deamidation, isomerization and oxidation, such that they display improved stability.

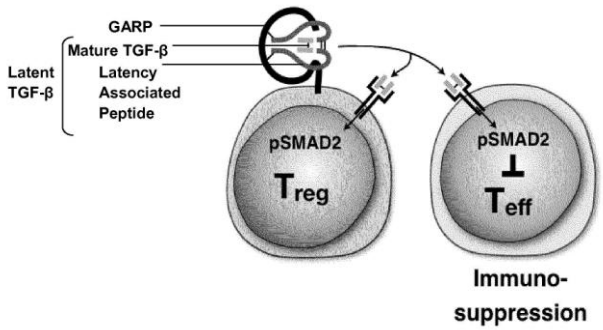

21: 2020/00061. 22: 2020/01/06. 43: 2026/11/10
51: A61K; C07K; G01N
71: REGENERON PHARMACEUTICALS, INC.
72: OLSON, William, TAVARE, Richard, THURSTON, Gavin, GIURLEO, Jason, T., MA, Dangshe
33: US 31: 62/536,239 32: 2017-07-24
33: US 31: 62/660,902 32: 2018-04-20
54: ANTI-CD8 ANTIBODIES AND USES THEREOF
00: -
Anti-CD8 antibodies, radiolabeled anti-CD8 antibodies, fluorescently labeled anti-CD8 antibodies and their use in imaging are provided herein. Included are methods of detecting the presence of CD8 proteins in a subject or sample.

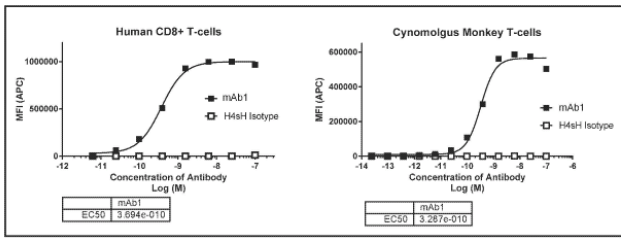

Figure 1

21: 2020/00957. 22: 2020/02/14. 43: 2026/10/22
51: A61K; A61P
71: GENZYME CORPORATION
72: SCHEIDT-PUGA, Ana Cristina
33: US 31: 62/549,732 32: 2017-08-24
33: EP 31: 17306720.8 32: 2017-12-07
54: TREATMENT OF ABNORMAL BONE CONDITIONS IN ACID SPHINGOMYELINASE DEFICIENCY PATIENTS
00: -
The invention provides methods of using a human acid sphingomyelinase (e.g., olipudase alfa) in treating an abnormal bone condition in acid sphingomyelinase deficiency patients such as low bone density, high bone marrow burden, and other skeletal abnormalities presented in acid sphingomyelinase deficiency patients.

21: 2020/01871. 22: 2020/03/24. 43: 2026/11/03
51: A61K; C07K
71: REGENERON PHARMACEUTICALS, INC.
72: CROLL, Susan D., GAO, Min, HU, Ying
33: US 31: 62/592,657 32: 2017-11-30
54: ANTI-TRKB MONOCLONAL ANTIBODIES AND METHODS OF USE
00: -
Antibodies that bind specifically to TrkB and methods of using the same are disclosed. Agonist antibodies that are neuroprotective, as shown by their effect on enhancing the survival of retinal ganglion cells in vitro are disclosed, and these agonist antibodies may be used in treatments such as disorders of the eye, including glaucoma. In addition, other neuronal diseases or disorders benefit from treatment with these agonist antibodies, including those characterized in part by neuronal damage. In certain embodiments, the invention includes antibodies that bind TrkB and mediate cell signaling. The antibodies of the invention may be fully human, non-naturally occurring antibodies formulated with excipients for injection.

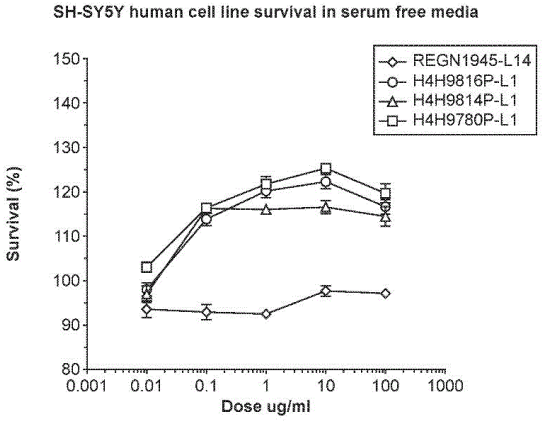

21: 2020/02038. 22: 2020/05/04. 43: 2026/09/16
51: A24F
71: RAI STRATEGIC HOLDINGS, INC.
72: SMITH, Jeffrey Sean, ALDERMAN, Steven L., BRINKLEY, Paul A., BAXTER-WRIGHT, Sarah A., HONG, Kyung Soo (Jason), NELSON, Paul R., SEARS, Stephen B., SUR, Rajesh, DARNELL, John, ROUND, Elaine K.
33: US 31: 15/710,681 32: 2017-09-20
33: US 31: 15/892,151 32: 2018-02-08

54: PRODUCT USE AND BEHAVIOR MONITORING INSTRUMENT

00: -

A product use and behavior instrument includes a housing defining a central compartment therein. A controller is positioned within the central compartment. The controller includes a connector. The connector is configured to operatively and removably couple the product use and behavior instrument to an electronic smoking article. The electronic smoking article includes a heating element to heat a tobacco product. The electronic smoking article includes a battery. A sensor circuit is structured to collect at least one use data characteristic of a smoking action. The smoking action is associated with use of at least one of the heating element and battery. Local memory is structured to store the at least one use data characteristic of the smoking action. A communication interface is structured to communicate the stored at least one use data characteristic of the smoking action to a remote computing device.

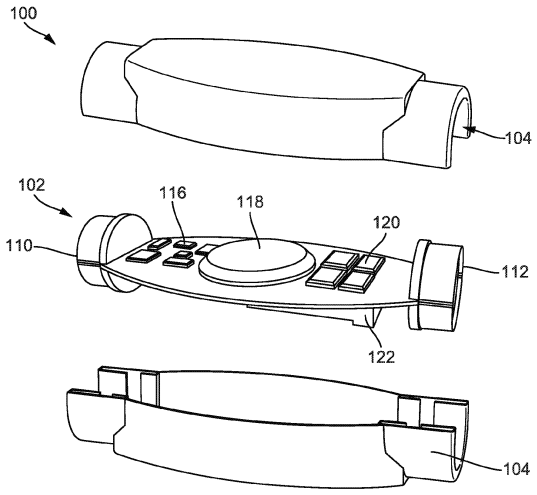

21: 2020/02622. 22: 2020/05/11. 43: 2026/09/22
51: H01P; H03H
71: UNIVERSITY OF PRETORIA
72: STANDER, Tinus, SINGH, Nishant
33: GB 31: 1720870.3 32: 2017-12-14

54: A NEGATIVE-RESISTANCE CIRCUIT AND ACTIVE FILTER FOR MILLIMETRE WAVE FREQUENCIES

00: -

The invention relates to a tunable, silicon-based negative-resistance circuit 10, 30 and to an active filter 50 for E-band frequencies (60 to 90 GHz). A base of a transistor 11 is connected to an on-chip inductive transmission line 13 which has a length of approximately a quarter-wavelength at a frequency of 83.5 GHz. The transmission line connects a DC voltage source 14 to the base terminal of the transistor 11 in order to bias the base. Another DC voltage source 15 is connected to the collector of the transistor 11 to bias the transistor. A capacitor 16 operatively bypasses or decouples the voltage source 15 in order to shunt high frequencies or alternating current (AC) signals to ground. The emitter terminal of the transistor 11 is connected to ground through a resistor 18 to limit the collector current (Ic). The circuit gives rise to improved quality factor of resonators.

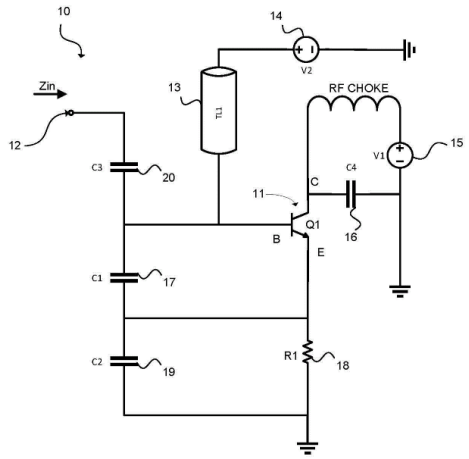

21: 2020/03865. 22: 2020/06/25. 43: 2026/10/14
51: C07D
71: CHEMOCENTRYX, INC.
72: FAN, Pingchen, LANGE, Christopher W., MALATHONG, Viengkham, MALI, Venkat Reddy, PUNNA, Sreenivas, TANAKA, Hiroko, ZENG, Yibin, ZHANG, Penglie
33: US 31: 62/609,834 32: 2017-12-22

54: DIARYL SUBSTITUTED 6,5-FUSED RING COMPOUNDS AS C5AR INHIBITORS

00: -

The present disclosure provides, inter alia, Compounds of Formula (I) or pharmaceutically acceptable salts thereof that are modulators of the C5a receptor. Also provided are pharmaceutical compositions and methods of use including the

treatment of diseases or disorders involving pathologic activation from C5a and non-pharmaceutical applications.

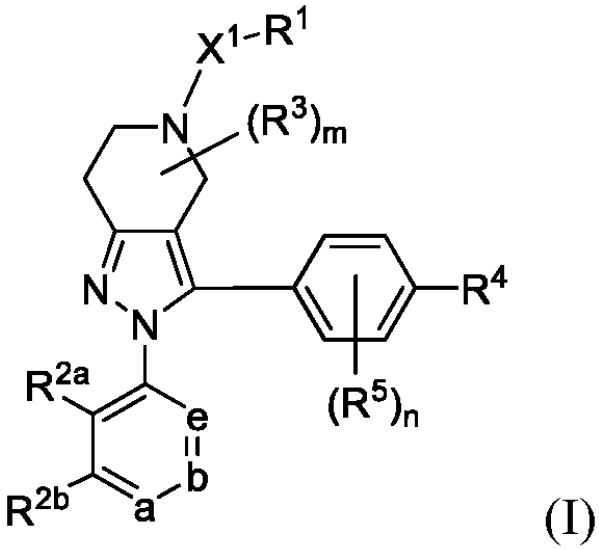

(I)

21: 2020/04944. 22: 2020/08/11. 43: 2026/09/08
51: C07K; A61P
71: FIVE PRIME THERAPEUTICS, INC.
72: QUAN, YONG, HUANG, CHIN-YI, GANDA, HARJEET SINGH
33: US 31: 62/633,537 32: 2018-02-21
54: B7-H4 ANTIBODY FORMULATIONS
00: -
The present disclosure provides pharmaceutical compositions comprising antibodies and antigen-binding fragments thereof that specifically bind to human B7-H4 (and optionally cynomolgus monkey, mouse, and/or rat B7-H4). The present disclosure also provides methods for treating disorders, such as cancer, by administering such pharmaceutical compositions.

21: 2020/05323. 22: 2020/08/26. 43: 2026/09/11
51: A61K; A61P
71: NKMAX CO., LTD.
72: PARK, SANG WOO, KIM, YONG MAN, JUNG, JAE SEOB, RHEE, YONG-HEE
33: KR 31: 10-2018-0012942 32: 2018-02-01
33: KR 31: 10-2018-0012938 32: 2018-02-01
33: KR 31: 10-2019-0001983 32: 2019-01-07
33: KR 31: 10-2019-0001981 32: 2019-01-07

54: METHOD OF PRODUCING NATURAL KILLER CELLS AND COMPOSITION FOR TREATING CANCER
00: -
A method for producing natural killer cells is disclosed. The method comprises isolating peripheral blood mononuclear cells (PBMCs) from a blood sample; isolating at least one of CD56+ cells and/or CD3-/CD56+ cells from the PBMCs; and co-culturing the at least one of CD56+ cells and/or CD3-/CD56+ cells with a combination of feeder cells in the presence of a cytokine. A composition for treating cancer is also disclosed. The composition comprises the CD56+ natural killer cells produced by the disclosed method and a cytokine.

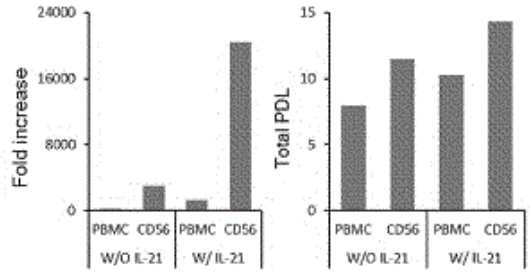

21: 2020/05697. 22: 2020/09/14. 43: 2026/10/05
51: A01N; A61K
71: THE BOARD OF TRUSTEES OF THE LELAND STANFORD JUNIOR UNIVERSITY
72: SEBASTIANO, VITTORIO, SARKAR, TAPASH JAY
33: US 31: 62/642,538 32: 2018-03-13
54: TRANSIENT CELLULAR REPROGRAMMING FOR REVERSAL OF CELL AGING
00: -
Provided herein are methods and compositions useful in cellular rejuvenation, tissue engineering, and regenerative medicine. Compositions and methods for rejuvenating aged cells and tissues to restore functionality are disclosed. In particular, cells are rejuvenated by transient exposure to non-integrated mRNAs encoding reprograming factors to rejuvenate cells while retaining cells in a differentiated state.

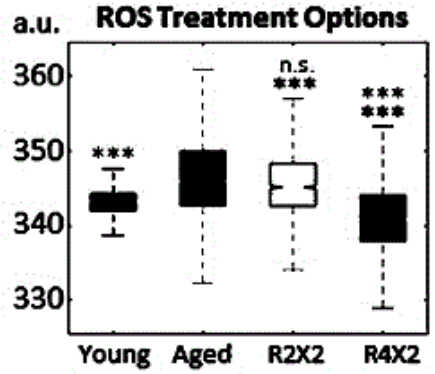

21: 2020/05826. 22: 2020/09/21. 43: 2026/10/12
51: A61K; C07K
71: SUN PHARMACEUTICAL INDUSTRIES LIMITED
72: THENNATI, Rajamannar, CHATURVEDI, Nishith, BURADE, Vinod Sampatrao, SHAHI, Pradeep Dinesh, NATARAJAN, Muthukumaran, NAGARAJA, Ravishankara Madavati, ZALAWADIA, Rishit Mansukhlal, PANDYA, Kunal, PATEL, Brijeshkumar, JOSHI, Dhiren Rameshchandra, SONI, Krunal Harishbhai, TIWARI, Abhishek, PATEL, Vipulkumar Shankarbhai
33: IN 31: 201821013109 32: 2018-04-05
33: IN 31: 201821040468 32: 2018-10-26
33: IN 31: 201821040474 32: 2018-10-26
54: NOVEL GLP-1 ANALOGUES
00: -
The present disclosure pertains to novel Glucagon like Peptide-1 (GLP-1) (7-37) analogs having an amino acid sequence with Leu or Ile at the C-terminal. The new analogs are potent GLP-1 agonists with reduced adverse effect and improved duration of action. The present disclosure further relates to acylated derivatives of the new analogs which have further improved potency and duration of action and are suitable for oral administration. The analogs of present disclosure may be useful in treatment of diabetes and obesity.

21: 2021/00430. 22: 2021/01/20. 43: 2026/10/22
51: A61K; C07K
71: DOMPE' FARMACEUTICI S.P.A.
72: ALLEGRETTI, Marcello, ARAMINI, Andrea, BECCARI, Andrea, GEMEI, Marica, MANTELLI, Flavio
33: EP 31: 18186029.7 32: 2018-07-27
54: IL-17A BINDING PEPTIDES AND MEDICAL USES THEREOF
00: -
The invention relates to IL-17A binding peptides, inhibitors of the interaction of IL-17A with the receptor IL-17RA, and to bioconjugates, dimers, pharmaceutical compositions and medical use thereof.

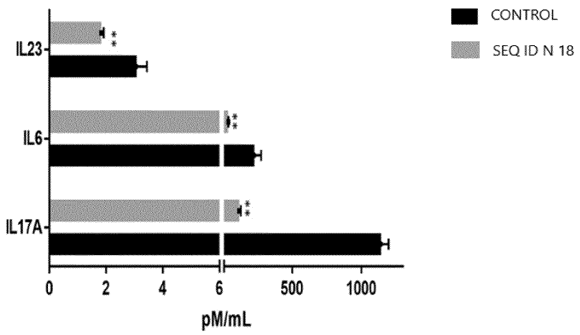

21: 2021/01394. 22: 2021/03/01. 43: 2026/09/14
51: H04N
71: V-NOVA INTERNATIONAL LIMITED
72: MEARDI, Guido, DAMNJANOVIC, Ivan
33: GB 31: 1812708.4 32: 2018-08-03
33: GB 31: 1812709.2 32: 2018-08-03
33: GB 31: 1812710.0 32: 2018-08-03
33: GB 31: 1903844.7 32: 2019-03-20
33: GB 31: 1904014.6 32: 2019-03-23
33: GB 31: 1904492.4 32: 2019-03-29
33: GB 31: 1905325.5 32: 2019-04-15
54: TRANSFORMATIONS FOR SIGNAL ENHANCEMENT CODING
00: -
Measures are provided to encode a signal. An input frame (102) is received and down-sampled to obtain a down-sampled frame (103). The down-sampled frame (103) is passed to an encoding module (104) which encodes the down-sampled frame (103) to generate an encoded frame (105). A decoded frame is obtained from a decoding module (106) which generates the decoded frame by decoding the encoded frame (105). A set of residual data (113) is generated by taking a difference between the decoded frame and the down-sampled frame (103) and is encoded to generate a set of encoded residual data. The encoding comprises transforming the set of residual data into a transformed set of residual data. The set of encoded residual data is output to a decoder to enable the decoder to reconstruct the input frame. Measures are also provided to decode a signal.

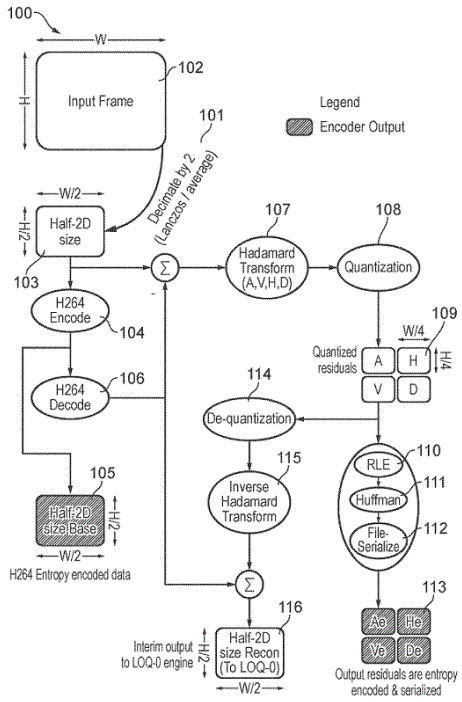

21: 2021/03098. 22: 2021/05/07. 43: 2026/09/07
51: A61K; A61P; C07K
71: Amgen Inc.
72: LIPFORD, James Russell, CANON, Jude Robert, SAIKI, Anne Y., REX, Karen Louise
33: US 31: 62/769,355 32: 2018-11-19

54: COMBINATION THERAPY INCLUDING A KRAS^{G12C} INHIBITOR AND ONE OR MORE ADDITIONAL PHARMACEUTICALLY ACTIVE AGENTS FOR THE TREATMENT OF CANCERS

00: -

The present invention provides combination therapy that includes an KRAS^{G12C} inhibitor, such as (see Formula), or a pharmaceutically acceptable salt thereof, and one or more additional pharmaceutically active agents, particularly for the treatment of cancers. The invention also relates to pharmaceutical compositions that contain an KRAS^{G12C} inhibitor and one or more additional pharmaceutically active agents for the treatment of cancers.

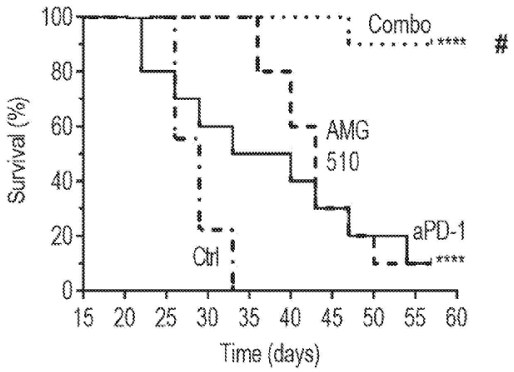

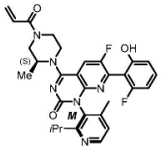

(I)

21: 2021/03373. 22: 2021/05/19. 43: 2026/10/20
51: C01B; C25B
71: BRILLIANT LIGHT POWER, INC.
72: MILLS, Randell
33: US 31: 62/794,515 32: 2019-01-18
33: US 31: 62/803,283 32: 2019-02-08
33: US 31: 62/823,541 32: 2019-03-25
33: US 31: 62/828,341 32: 2019-04-02
33: US 31: 62/839,617 32: 2019-04-27
33: US 31: 62/844,643 32: 2019-05-07

54: MAGNETOHYDRODYNAMIC HYDROGEN ELECTRICAL POWER GENERATOR

00: -

A power generator is described that provides at least one of electrical and thermal power comprising (i) at least one reaction cell for reactions involving atomic hydrogen hydrogen products identifiable by unique analytical and spectroscopic signatures, (ii) a molten metal injection system comprising at least one pump such as an electromagnetic pump that provides a molten metal stream to the reaction cell and at least one reservoir that receives the molten metal stream, and (iii) an ignition system comprising an electrical power source that provides low-voltage, high-current electrical energy to the at least one steam of molten metal to ignite a plasma to initiate rapid kinetics of the reaction and an energy gain. In some embodiments, the power generator may comprise: (v) a source of H2 and O2 supplied to the plasma, (vi) a molten metal recovery system, and (vii) a power converter capable of (a) converting the high-

power light output from a blackbody radiator of the cell into electricity using concentrator thermophotovoltaic cells or (b) converting the energetic plasma into electricity using a magnetohydrodynamic converter.

Fig. 11

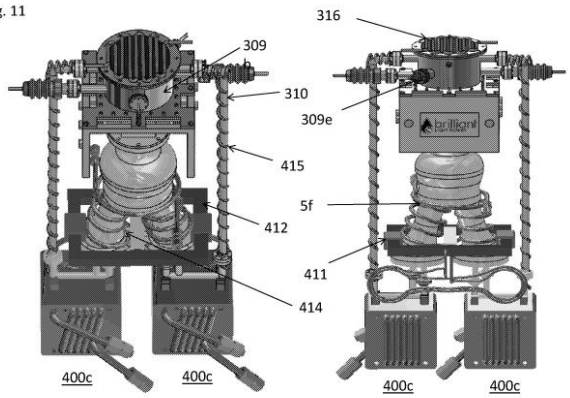

21: 2021/03641. 22: 2021/05/27. 43: 2026/08/31
51: A61K; A61P; C07D
71: Les Laboratoires Servier, Vernalis (R&D) Limited
72: DE BAETS, Emilie, AUVRAY, Julien, LYNCH, Michael, LEBLANC, Nicolas
33: EP(FR) 31: 18306634.9 32: 2018-12-06

54: NEW CRYSTALLINE FORMS OF A MCL-1 INHIBITOR, A PROCESS FOR THEIR PREPARATION AND PHARMACEUTICAL COMPOSITIONS CONTAINING THEM.

00: -

Crystalline forms of Compound A: (I) characterized by its X-ray powder diffraction diagram, solid-state ^{13}C NMR spectrum, MIR spectrum and Raman spectrum and pharmaceutical compositions containing it.

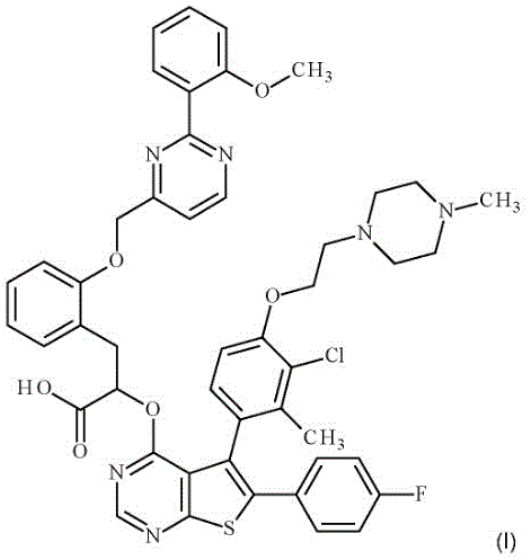

(I)

21: 2021/03729. 22: 2021/05/31. 43: 2026/09/29
51: C12N
71: WAGENINGEN UNIVERSITEIT
72: GEURTS, Rene, LIU, Jieyu, RUTTEN, Luuk, KULIKOVA, Olga, BISSELING, Ton
33: US 31: 62/776,325 32: 2018-12-06

54: METHODS OF GENETICALLY ALTERING A PLANT NIN-GENE TO BE RESPONSIVE TO CYTOKININ

00: -

Aspects of the present disclosure relate to genetically modified plants comprising *NODULE INCEPTION (NIN)* and *NIN-LIKE PROTEIN (NLP)* that have been genetically altered to be responsive to cytokinin so that the NIN or NLP protein can induce root nodulation upon appropriate signaling.

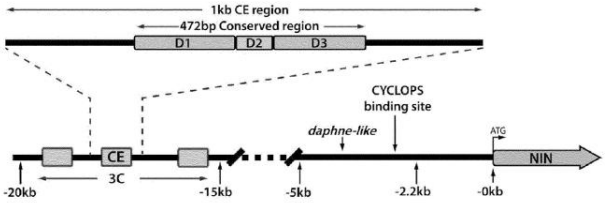

21: 2021/03847. 22: 2021/06/04. 43: 2026/10/15
51: H04L
71: CAPITEC BANK LIMITED
72: STEYN, Louis Johannes, DE WET, Riaan, CLAUSEN, Zsa-Jacques, SMITH, Arno
33: ZA 31: 2018/07754 32: 2018-11-19

54: METHOD AND SYSTEM FOR PROVIDING A TAMPER PROOF RECORD CHAIN

00: -

Methods and systems are disclosed for creating a tamper proof record chain of a transaction comprising a number of transaction milestones. For each transaction milestone a record entry is created. A timestamp and a data message that includes at least part of a term of the transaction or an identifier of a party are received, each being associated with the milestone. A value is obtained that provides a link to an immediately preceding and/or following record, if any; and the data message, timestamp and link value are written to the record entry. The record entry is written to a tamper proof storage configured to disable its modification after completing the write operation. A series of data messages of the linked record entries in the tamper proof storage includes at least an identifier of each party to the transaction and represents the record chain for the transaction.

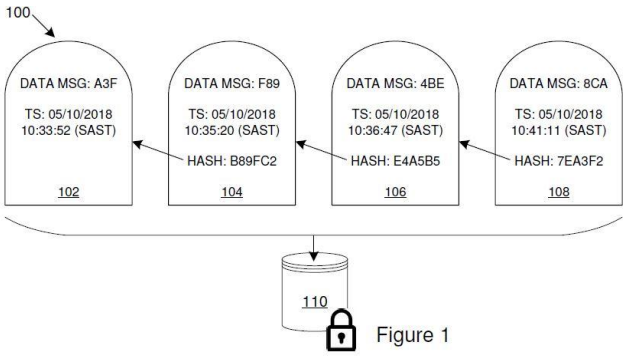

Figure 1

21: 2021/04165. 22: 2021/06/17. 43: 2026/10/20
51: G16B
71: ILLUMINA, INC.
72: EBERLE, Michael A., CHEN, Xiao
33: US 31: 62/896,548 32: 2019-09-05
33: US 31: 62/908,555 32: 2019-09-30
33: US 31: 63/006,651 32: 2020-04-07
54: METHODS AND SYSTEMS FOR DIAGNOSING FROM WHOLE GENOME SEQUENCING DATA
00: -
Disclosed herein include systems, devices, computer readable media, and methods for paralog geno typing, such as determining a copy number of survival of motor neuron 1 gene and genotyping cytochrome P450 family 2 subfamily D member 6 gene using a Gaussian mixture model comprising a plurality of Gaussians each representing a different integer copy number.

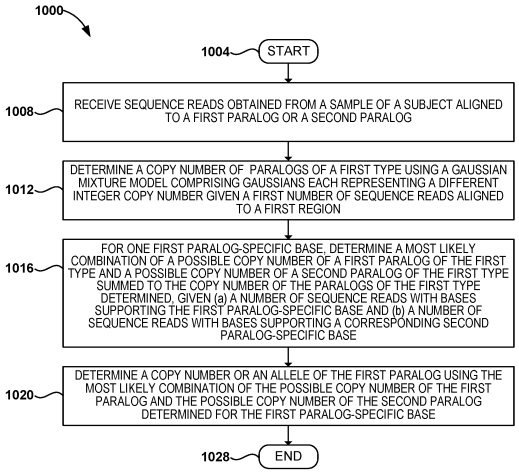

21: 2021/04659. 22: 2021/07/05. 43: 2026/10/20
51: C07D; C07K; A61P
71: REGENERON PHARMACEUTICALS, INC.
72: NITTOLI, Thomas, CHOI, Seungyong Sean, SAHA, Mrinmoy
33: US 31: 62/783,506 32: 2018-12-21
33: US 31: 62/844,860 32: 2019-05-08
54: RIFAMYCIN ANALOGS AND ANTIBODY-DRUG CONJUGATES THEREOF
00: -
The disclosure relates to rifamycin analog compounds, intermediates and precursors thereof, and pharmaceutical compositions capable of inhibiting bacterial growth (e.g., S. aureus growth) and treating bacterial infections (e.g., S. aureus infections). The disclosure further relates to antibody-drug conjugates of rifamycin analog compounds and antibodies, for example, antibodies specific for infectious disease-related targets such as membrane glycoprotein receptor (MSR1), wall teichoic acids (WTA) or Protein A, and methods of use thereof to inhibit bacterial growth and treat bacterial infections.

21: 2021/05482. 22: 2021/08/02. 43: 2026/09/29
51: C22B; C22C; C21C
71: OUTOKUMPU OYJ
72: VALLO, KIMMO, PARVIAINEN, TIMO
33: FI 31: 20195153 32: 2019-03-01
54: COMBINED SMELTING OF MOLTEN SLAGS AND RESIDUALS FROM STAINLESS STEEL AND FERROCHROMIUM WORKS
00: -
The present invention relates to a method for smelting metal- and metal oxide- containing side streams, such as slags and wastes generated at stainless steel and ferrochromium works. The invented processing method is a smelting process for all side streams and residuals from the mentioned fields of industry. The streams are treated mainly in liquid phase for energy saving.

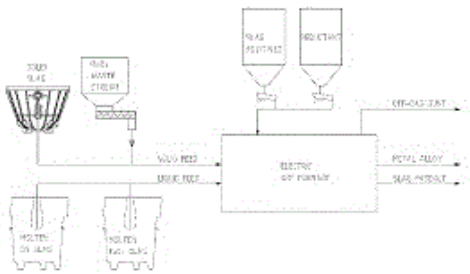

21: 2021/05587. 22: 2021/08/06. 43: 2026/09/22
51: C03C; B29C; C09D; G01N
71: OWENS-BROCKWAY GLASS CONTAINER INC.

72: CHISHOLM, BRIAN J
33: US 31: 16/294,441 32: 2019-03-06
54: REPAIRING AN OUTER SURFACE OF A GLASS PRODUCT
00: -
An apparatus (20) and method tor repairing a glass product (10) are disclosed herein. The apparatus and method may include imaging the glass product to capture one or more images of the glass product to identify repairable portion (18A, 18B) of the glass product, processing the captured one or more images to identify repairable portion of the glass product, and printing a durable material (111 A, 111 B) at the repairable portion of the glass product.

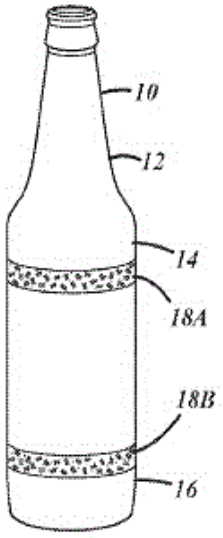

21: 2021/05891. 22: 2021/08/17. 43: 2026/09/22
51: E21C; B03B; B07B
71: EXTRAKT PROCESS SOLUTIONS, LLC
72: PAINTER, PAUL C, MILLER, BRUCE G, LUPINSKY, ARON
33: US 31: 62/807,448 32: 2019-02-19
54: WATER MANAGEMENT SYSTEM FOR ORE MINING OPERATION
00: -
Processes of extracting mineral deposits in ore include treating a saline source, e.g., seawater, to reduce a concentration of one or more multivalent ions (e.g., Ca^{2+}, Mg^{2+}, SO_4^{2-}) dissolved in the saline source by passing the seawater through one or more nanofilters to produce treated saline water while maintain a certain concentration of dissolved monovalent ions (e.g., (Na^+, K^+ and $C1^-$) in the treated saline water. The treated saline water can be used in an operation to extract minerals from ore such as in a flotation operation to extract minerals from ore, or to consolidate tailings generated from an extraction of minerals from ore, or both.

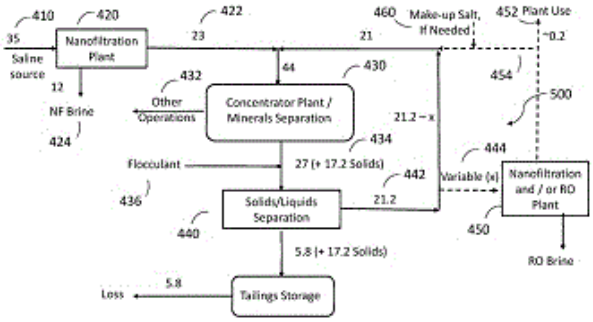

21: 2021/06350. 22: 2021/08/31. 43: 2026/09/25
51: H04N
71: BEIJING BYTEDANCE NETWORK TECHNOLOGY CO., LTD., BYTEDANCE INC.
72: ZHU, WEIJIA, ZHANG, LI, XU, JIZHENG, ZHANG, KAI, LIU, HONGBIN, WANG, YUE
33: CN 31: PCT/CN2019/077454 32: 2019-03-08
54: JOINT CODING OF PALETTE MODE USAGE INDICATION
00: -
Devices, systems and methods for palette mode coding are described. An exemplary method for video processing includes determining, for a conversion between a block of a video region in a video and a bitstream representation of the video, a prediction mode based on one or more allowed prediction modes that include at least a palette mode of the block. An indication of usage of the palette mode is determined according to the prediction mode. The method also includes performing the conversion based on the one or more allowed prediction modes.

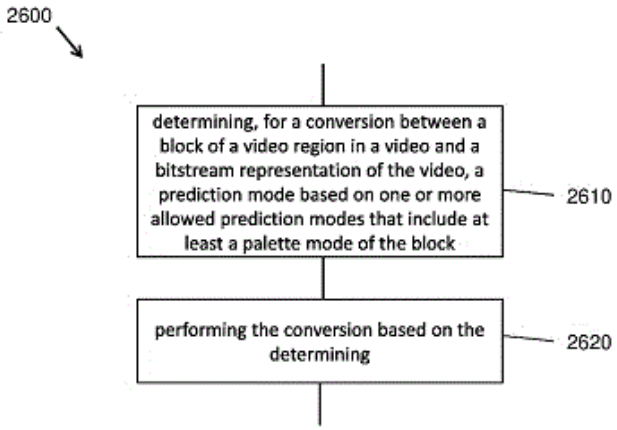

21: 2021/06563. 22: 2021/09/07. 43: 2026/09/08
51: C07K; C12N; C40B
71: Takara Bio Inc.
72: NISHIE, Toshikazu, TAKASHIMA, Fuyuko, ENOKI, Tatsuji, MINENO, Junichi, TANAKA, Yoshinori
33: JP 31: 2019-082417 32: 2019-04-24

54: AAV MUTANT HAVING BRAIN-TARGETING PROPERTY

00: -

The present invention provides: a nucleic acid which encodes an adeno-associated virus (AAV) capsid protein mutant that contains a peptide comprising an amino acid sequence selected from the group consisting of SEQ ID Nos. 15 to 62 or a peptide comprising an amino acid sequence produced by substituting, deleting, inserting and/or adding one or several amino acid residues in an amino acid sequence selected from the group consisting of SEQ ID Nos. 15 to 62; DNA comprising the nucleic acid; a cell harboring the DNA; and a method for producing the cell.

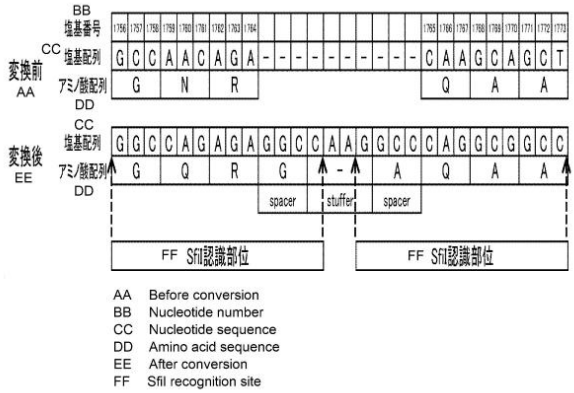

21: 2021/06715. 22: 2021/09/10. 43: 2026/09/09
51: H04L; B61L
71: FAIVELEY TRANSPORT TOURS
72: BAYOUDH, SABER, LAMIDE, FABRICE
33: FR 31: 1902194 32: 2019-03-04

54: MODULE FOR COLLECTING DATA RELATING TO A DEVICE OF A PASSENGER TRANSPORT VEHICLE

00: -

A module for collecting data relating to at least one device of a passenger transport vehicle (100) comprises: - connection means (13) configured to be connected to the maintenance port (21) of a device controller (20) managing the operation of the at least one device and to establish communication with the device controller (20) through the maintenance port (21); and - data recovery means (11) configured to collect, during the operation of the at least one device at predefined times, data relating to the at least one device via the established communication. The invention is applicable in passenger transport vehicles, in particular rail transport vehicles such as, for example, trains, subways, trams, trolleybuses, etc.

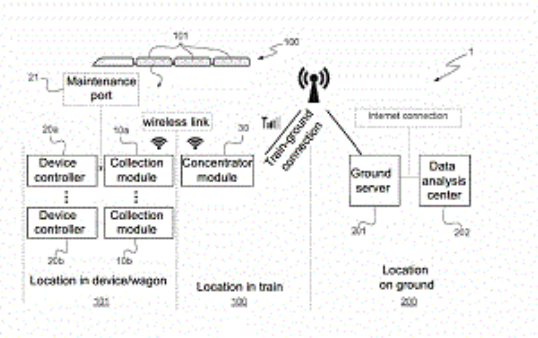

21: 2021/07417. 22: 2021/10/01. 43: 2026/09/21

51: A61K; A61P; C07K; C12N
71: Ono Pharmaceutical Co., Ltd.
72: SHIBAYAMA, Shiro, TEZUKA, Tomoya, THROSBY, Mark, DE KRUIF, Cornelis Adriaan, VAN LOO, Pieter Fokko, KLOOSTER, Rinse, ROOVERS, Robertus Cornelis
33: JP 31: 2019-071840 32: 2019-04-04
54: BISPECIFIC ANTIBODY
00: -
A problem to be solved by the present invention is to provide a new agent for preventing, suppressing the progression of symptoms of, suppressing the recurrence of or treating autoimmune diseases.The inventors of the present invention have diligently studied, focused on the PD-1/CD19 bispecific antibody and the like as a substance to dissolve such a problem, and confirmed that the bispecific antibody can be a new agent for preventing, suppressing the progression of symptoms of, suppressing the recurrence of or treating autoimmune diseases. They also confirmed that the bispecific antibody has the feature of allowing the interaction between PD-1 and PD-L1 as its ligand.

21: 2021/09129. 22: 2021/11/16. 43: 2026/09/21
51: A61K; A61P; C07D
71: ALIGOS THERAPEUTICS, INC.
72: VANDYCK, Koen, RABOISSON, Pierre Jean-Marie Bernard, MCGOWAN, David, DEVAL, Jerome
33: US 31: 62/845,252 32: 2019-05-08
54: MODULATORS OF THR-ß AND METHODS OF USE THEREOF
00: -
Disclosed herein are compounds of Formula (I) or a pharmaceutically acceptable salt, prodrug, amide or ester thereof, where i) TL is a moiety of Formula IIa, IIb, IIIa, IIIb, IIIc, or IIId; ii) CE is a moiety of Formula IV; iii) HD is a moiety of Formula V or VI; where the substituents are as defined herein. Disclosed are also pharmaceutical compositions comprising the above compounds, and methods of treating disease by administering or contact a patient with one or more of the above compounds.

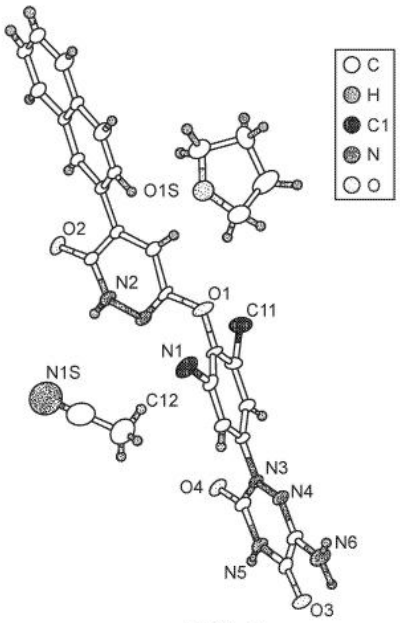

FIG. 1

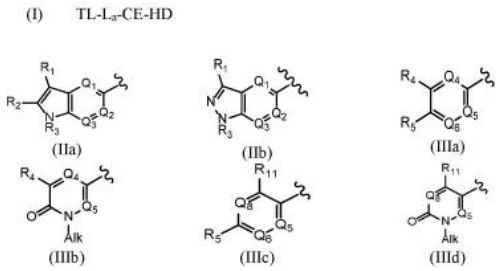

21: 2021/09715. 22: 2021/11/29. 43: 2026/09/14
51: H04L; H04W
71: NOKIA TECHNOLOGIES OY
72: CASATI, Alessio
54: OPTIMIZED USER EQUIPMENT CAPABILITIES SIGNALING INCLUDING RECOVERY FROM DATABASE FAILURE
00: -
Methods and apparatus, including computer program products, are provided for UE capability signaling. In some example embodiment, there may be provided an apparatus including caused to at least: receive, from a user equipment capability management function, a message including a first restart counter value indicating a restart of the user equipment capability management function; inhibit, in response to receiving the first restart counter value, one or more old user equipment capability identifiers associated with a second restart counter value, the second restart counter value being associated to a pre-restart state of the user

equipment capability management function; and send the first restart counter value indicating the restart of the user equipment capability management function. Related systems, methods, and articles of manufacture are also described.

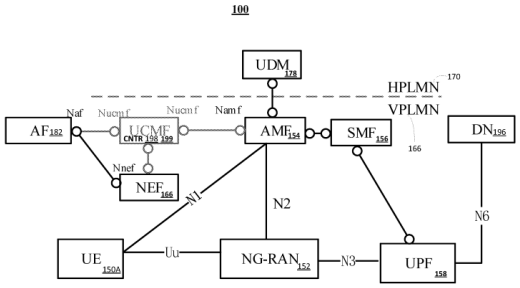

21: 2021/10094. 22: 2021/12/07. 43: 2026/10/15
51: G01N; A61P
71: THE COUNCIL OF THE QUEENSLAND INSTITUTE OF MEDICAL RESEARCH
72: PULUKKUNAT, Dileep K., WYKES, Michelle
33: US 31: 62/855,590 32: 2019-05-31
33: US 31: 62/900,105 32: 2019-09-13
33: US 31: 62/964,487 32: 2020-01-22
54: ACTIVATING ANTI-GAL9 BINDING MOLECULES
00: -
Anti-GAL9 antibody constructs, pharmaceutical compositions comprising the constructs, and methods of use thereof are presented.

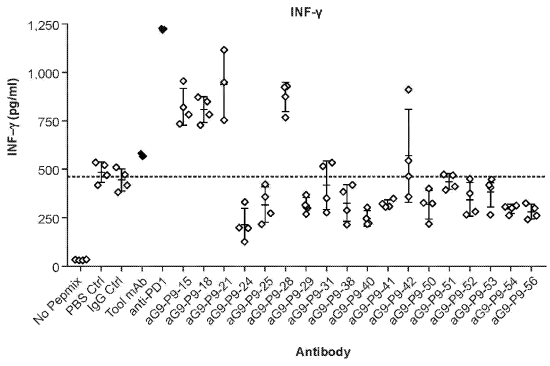

21: 2022/00791. 22: 2022/01/17. 43: 2026/08/28
51: B01J; D21H; C01B; C01G; C08B; C08J; C09D
71: SOL-GEL MATERIALS & APPLICATIONS LTD
72: ISMAIL, Fanya
33: GB 31: 1910744.0 32: 2019-07-26
33: GB 31: 1910748.1 32: 2019-07-26
33: GB 31: 2001928.7 32: 2020-02-12
33: GB 31: PCT/GB2020/050325 32: 2020-02-12
54: SOLS, MULTIFUNCTIONAL APPLICATIONS OF SOLS, AND ASSOCIATED PRODUCTS
00: -
The use of a sol comprising a solvent, an alkoxide and a catalyst to prepare a water impermeable product is provided. Also provided is a water impermeable fibre-based product prepared using a sol. Further provided is a sol comprising a solvent, an alkoxide, a biopolymer, and a catalyst. A method of making a sol comprising a solvent, an alkoxide, a biopolymer, and a catalyst is also provided. The method comprises: a) dispersing a biopolymer in a solution comprising a catalyst and then adding an alkoxide; b) dispersing an alkoxide in a solvent, adding a catalyst and then adding a biopolymer; or c) dispersing an alkoxide in a solution comprising a catalyst and then adding a biopolymer. Yet further provided is a coated product wherein the product has been coated with a sol comprising a solvent, an alkoxide, a biopolymer, and a catalyst. A powder derived from a sol as described herein is also disclosed.

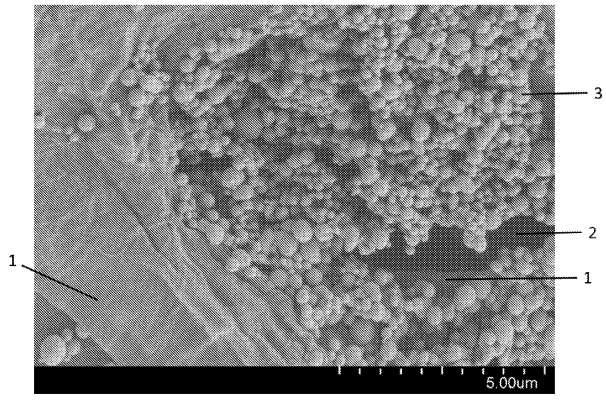

21: 2022/03573. 22: 2022/03/28. 43: 2026/09/21
51: H04W
71: Huawei Technologies Co., Ltd.
72: TIE, Xiaolei, XUE, Lixia, HUANG, Wenwen
54: COMMUNICATION METHOD AND COMMUNICATIONS APPARATUS
00: -
The present application relates to the field of communication technology. Disclosed are a communication method and apparatus,for providing a solution capable of jointly indicating minimum K0 and minimum K2, indicating minimum K0 for a valid

downlink BWP and minimum K2 for a valid uplink BWP of a terminal device. Said method comprises: a network device sending downlink control information (DCI) to a terminal device, the DCI containing indication information, the indication information being used to indicate one minimum K0 of at least one minimum K0 configured for a downlink BWP of the terminal device, or to indicate one minimum K2 of at least one minimum K2 configured for an uplink BWP of the terminal device, wherein there is a correlation between the minimum K0 configured for the downlink BWP and the minimum K2 configured for the uplink BWP.

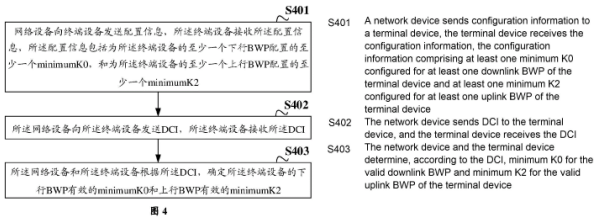

图 4

21: 2022/04088. 22: 2022/04/11. 43: 2026/09/02
51: B23B; C04B
71: Diamond Innovations, Inc.
72: SHAO, Rui, DUES, Lawrence
33: US 31: 62/952,820 32: 2019-12-23
54: COMPOSITE BASED ON CUBIC BORON NITRIDE AND METHOD OF MAKING THEREOF
00: -
A cubic boron nitride (cBN)-based composite including about 30 - 65 vol. % cBN, about 15 - 45 vol. % titanium (Ti)-containing binders, about 2 - 20 vol. % zirconium dioxide (ZrO_2), about 3 - 15 vol. % cobalt-tungsten-borides ($Co_xW_yB_z$), and about 2 - 15 vol. % aluminum oxide (Al_2O_3).

21: 2022/04259. 22: 2022/04/14. 43: 2026/09/02
51: A23C; A23G; A23L
71: Société des Produits Nestlé S.A.
72: JAIN, Vishist Kumar, TEOH, Hooi Khim, WAING, Seinn Lae, ANANTA, Edwin, YE, Lijuan, MULLER, Jeroen André
33: SG 31: 10201909063T 32: 2019-09-27
54: COCOA AND/OR MALT BEVERAGE PRODUCTS
00: -
The present invention relates to cocoa and/or malt beverage products comprising isomaltooligosaccharides and methods of producing such products. The products may be reduced in sugar compared to conventional cocoa and/or malt beverage products while providing a similar sweetness, texture and taste as the conventional products.

21: 2022/04271. 22: 2022/04/14. 43: 2026/09/02
51: A61K; C11D
71: Firmenich SA
72: STRUILLOU, Arnaud, OUALI, Lahoussine, FADEL, Addi, VAN GRUIJTHUIJSEN, Kitty
33: US 31: 62/950,155 32: 2019-12-19
54: PERFUME DELIVERY SYSTEM
00: -
The present invention is in the field of perfume delivery systems. In particular, the present invention relates to a delivery system comprising a biodegradable carrier and a perfume formulation and a perfuming composition and a perfumed consumer product comprising such delivery system.

21: 2022/04382. 22: 2022/04/19. 43: 2026/09/02
51: A61K; C07K
71: Invectys SAS
72: LOUSTAU, Maria, HUNAULT, Lise, LANGLADE-DEMOYEN, Pierre, CAUMARTIN, Julien
33: EP(FR) 31: 19306148.8 32: 2019-09-20
54: SINGLE-DOMAIN ANTIBODIES DIRECTED AGAINST LILRB2
00: -
The present invention relates to single-domain antibodies (sdAbs) directed against Leukocyte immunoglobulin-like receptor subfamily B member 2 (LILRB2), pharmaceutical compositions comprising

21: 2022/04445. 22: 2022/04/20. 43: 2026/09/03
51: A61K; A61P
71: Celgene Corporation
72: ANTON, Maria Soraya Carrancio, BUCHHOLZ, Tonia J., CHANG, Henry, FILVAROFF, Ellen, KASIBHATLA, Shailaja, LOPEZ-GIRONA, Antonia, MOHAN, Adithi, NARLA, Rama Krishna, POURDEHNAD, Michael, PIERCEALL, William Edward, THAKURTA, Anjan
33: US 31: 62/923,945 32: 2019-10-21
54: SUBSTITUTED 4-AMINOISOINDOLINE-1,3-DIONE COMPOUNDS AND SECOND ACTIVE AGENTS FOR COMBINED USE
00: -
Provided herein are methods of using (S)-2-(2,6-dioxopiperidin-3-yl)-4-((2-fluoro-4-((3-morpholinoazetidin-1-yl) methyl) benzyl) amino) isoindoline-1,3-dione, or an enantiomer, mixture of enantiomers, tautomer, isotopolog, or

pharmaceutically acceptable salt thereof, in combination with a second active agent for treating, preventing or managing hematological malignancies. The second active agent is one or more of an HDAC inhibitor, a BCL2 inhibitor, a BTK inhibitor, an mTOR inhibitor, a PI3K inhibitor, a PKCß inhibitor, a SYK inhibitor, a JAK2 inhibitor, an Aurora kinase inhibitor, an EZH2 inhibitor, a BET inhibitor, a hypomethylating agent, a DOT1L inhibitor, a HAT inhibitor, a WDR5 inhibitor, a DNMT1 inhibitor, an LSD-1 inhibitor, a G9A inhibitor, a PRMT5 inhibitor, a BRD inhibitor, a SUV420H1/H2 inhibitor, a CARM1 inhibitor, a PLK1 inhibitor, an NEK2 inhibitor, an MEK inhibitor, a PHF19 inhibitor, a PIM inhibitor, an IGF-1R inhibitor, an XPO1 inhibitor, a BIRC5 inhibitor, or a chemotherapy.

Sensitivity to Compound 1 single agent in DLBCL cell lines

sensitive to resistant

TMD-8	SU-DHL-2	SU-DHL-10	Pfeiffer	WSU-DLCL2	OCI-Ly10	Riva	U2932	SU-DHL-4	DB
58.67	108.4	123.7	268.2	362	403.5	496.3	577	585.3	670.8

Results shown as area under the curve in readouts from Cell Titer Glo assay after exposure to Compound 1. The numbers are Area Under the Curve for each cell line after exposure to Compound 1 at concentrations from 0 to 1000nM during 5 days.

21: 2022/04749. 22: 2022/04/28. 43: 2026/09/02
51: B23B; C04B
71: Diamond Innovations, Inc.
72: SHAO, Rui, DUES, Lawrence
33: US 31: 62/968,479 32: 2020-01-31
54: COMPOSITE FORMED OF CUBIC BORON NITRIDE WITHOUT TI-BASED CERAMIC COMPOUND AND METHOD OF MAKING THEREOF
00: -
A cubic boron nitride (cBN)-based composite including about 30 - 65 vol. % cBN, about 3 -30 vol. % zirconium (Zr)-containing compounds, about 0 - 10 vol. % cobalt-tungsten-borides ($Co_xW_yB_z$), about 2-30 vol. % aluminum oxide (Al_2O_3), about 0.5-10 vol. % tungsten borides, and less than or equal to about 5 vol. % aluminum nitride (AlN).

21: 2022/05233. 22: 2022/05/11. 43: 2026/11/10
51: B61L; G01N
71: ATHENA INDUSTRIAL TECHNOLOGIES INC.
72: GIES, Paul, D.
33: US 31: 62/914,751 32: 2019-10-14
54: BROKEN RAIL DETECTOR
00: -
A method and apparatus to detect breaks in tracks and/or detect the presence of a vehicle, such as a train, in a monitored section of the track or rail. Embodiments of the present invention measure the change in track inductance associated with a track or rail break. Electrical shunts are connected between the rails at spaced-apart intervals (for example a shunt can be placed every mile). At least two different frequencies of alternating current are generated and fed into the segments of rail (for example at or near a mid-point between the shunts). If a rail break occurs, the total inductance of the rail at that segment will change. Using two or more frequencies allows a rail break to be differentiated from environmental rail-to-rail and rail-to-earth leakage.

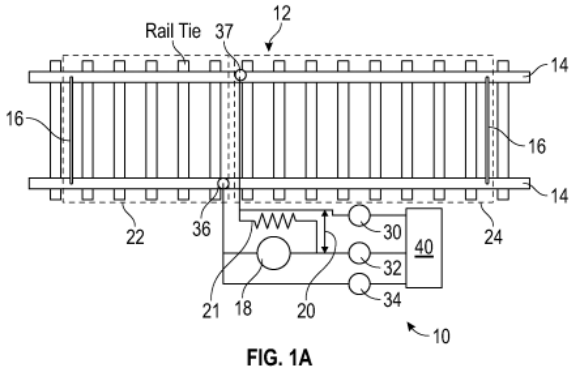

FIG. 1A

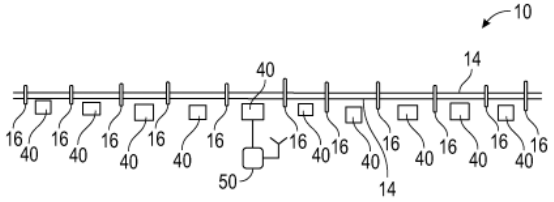

FIG. 1B

21: 2022/05276. 22: 2022/05/12. 43: 2026/10/12
51: A61F; D04H
71: PAUL HARTMANN AG
72: MALOWANIEC, Krzysztof-Daniel, KESSELMEIER, Rüdiger, KAŠPÁRKOVÁ, Pavlína, MECL, Zdenek
33: EP 31: 19204354.5 32: 2019-10-21
54: ABSORBENT ARTICLE WITH SOFT ACQUISITION COMPONENT
00: -
An absorbent article comprising an absorbent storage core and an acquisition component, the acquisition component comprises a nonwoven acquisition fabric, the nonwoven acquisition fabric

comprises filaments, the filaments comprise a first polymeric material and a second polymeric material, the second polymeric material having its melting point lower than the first polymeric material, wherein the second polymeric material extends in the longitudinal direction of the filaments and forms at least a part of the surface of the filaments, and the nonwoven fabric comprises filament-to-filament bonds formed of the second polymeric material wherein the nonwoven acquisition fabric has a structural softness of at least 80 $m^4mm^2g^{-2}$.

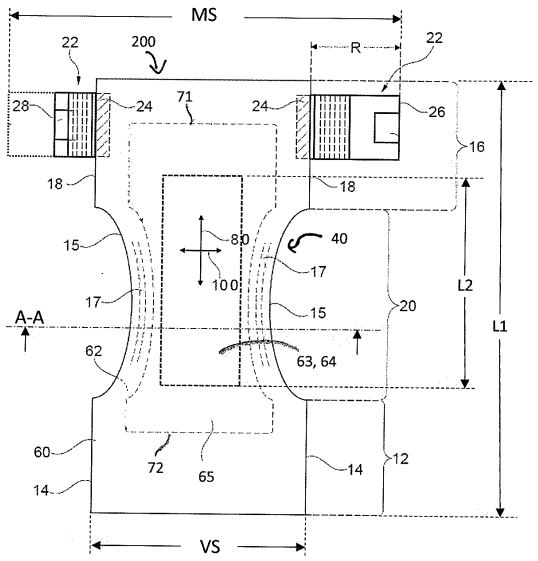

21: 2022/05448. 22: 2022/05/17. 43: 2026/09/07
51: A61K; C07K; C12N
71: CUE BIOPHARMA, INC.
72: SEIDEL III, RONALD D, CHAPARRO, RODOLFO J, ROSS, JOHN F, LOW, CHEE MENG
33: US 31: 62/925,227 32: 2019-10-23
54: TGF-BETA POLYPEPTIDES
00: -
The present disclosure provides Transforming Growth Factor Beta (TGF-β) polypeptide constructs and complexes that find use in, for example, therapeutic treatment of diseases including autoimmune diseases. Also described are nucleic acids that encode the constructs and complexes and methods of preparing the constructs and complexes in cell-based expression systems.

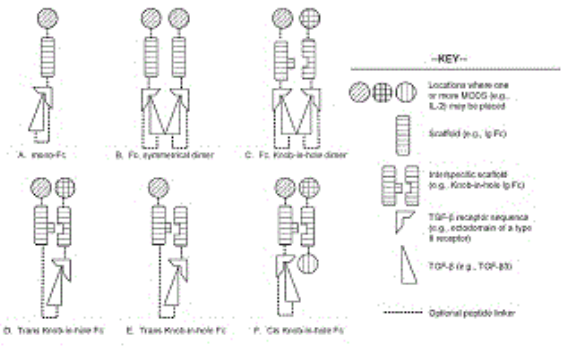

21: 2022/05650. 22: 2022/05/23. 43: 2026/09/02
51: H04W
71: NOKIA TECHNOLOGIES OY
72: WON, Sung Hwan, WOLFNER, György Tamás
33: GB 31: 1915748.6 32: 2019-10-30
54: METHOD AND APPARATUS FOR MANUALLY SELECTING A NETWORK
00: -
A method comprising:determining, by a user equipment, that a non-closed access group cell is available to the user equipment in a public land mobile network, wherein the public land mobile network is identified by a public land mobile network identity and the user equipment is only allowed to access the public land mobile network via one or more closed access group cells; displaying the public land mobile network identity to a user; receiving user input selecting the public land mobile network identity; and transmitting a registration request to the public land mobile network identified by the public land mobile network identity.

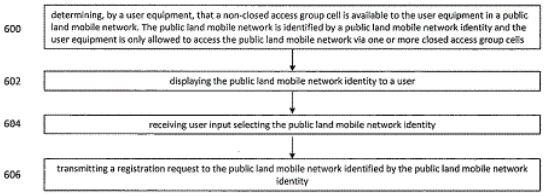

21: 2022/05943. 22: 2022/05/27. 43: 2026/09/09
51: C07K
71: THE REGENTS OF THE UNIVERSITY OF CALIFORNIA
72: WELLS, JAMES A, COTTON, ADAM D, NGUYEN, DUY, PANCE, KATARINA
33: US 31: 62/929,674 32: 2019-11-01
54: DEGRADATION OF SURFACE PROTEINS USING BISPECIFIC BINDING AGENT
00: -

The present disclosure relates to, among other things, methods for degrading targeted surface proteins using the ubiquitin pathway by using a bispecific binding agent or an immunoconjugate that binds the targeted surface protein and a membrane-associated ubiquitin E3 ligase. The present disclosure also relates to methods for degrading targeted surface proteins using the ubiquitin pathway using an engineered transmembrane protein that binds the targeted surface protein and exhibits ubiquitin E3 ligase activity. The disclosure also provides compositions and methods useful for producing such bispecific binding agents and engineered transmembrane proteins, immunoconjugates, nucleic acids encoding same, host cells genetically modified with the nucleic acids, as well as methods for modulating an activity of a cell and/or for the treatment of various diseases such as cancers.

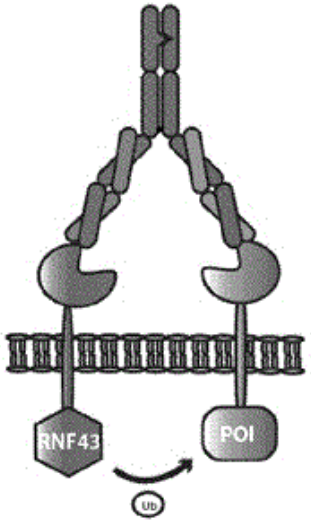

21: 2022/06118. 22: 2022/06/01. 43: 2026/09/16
51: A61K; C07K; A61P
71: THERATECHNOLOGIES INC.
72: MARSOLAIS, Christian, DEMEULE, Michel, CURRIE, Jean-Christophe, LAROCQUE, Alain
33: US 31: 62/945,111 32: 2019-12-06

54: SORTILIN BINDING CONJUGATE COMPOUNDS, COMPOSITIONS AND USES THEREOF FOR TREATING CANCER

00: -

The present disclosure relates to compositions comprising a solubilizing agent and a peptide compound and/or a conjugate compound, processes, methods and uses thereof for treatment of cancer or aggressive cancer. For example, the conjugate compounds can comprise the formula of A-(B)n, wherein A is a peptide compound; and B is at least one therapeutic agent, and the peptide compounds can comprise compounds of formula $X_1X_2X_3X_4X_5GVX_6AKAGVX_7NX_8FKSESY$ (I) (SEQ ID NO: 1) $(X_9)_nGVX_{10}AKAGVX_{11}NX_{12}FKSESY$ (II) (SEQ ID NO: 2) $YKX_{13}LRRX_{14}APRWDX_{15}PLRDPALRX_{16}X_{17}L$ (III) (SEQ ID NO: 3) $YKX_{18}LRR(X_{19})_nPLRDPALRX_{20}X_{21}L$ (IV) (SEQ ID NO: 4) IKLSGGVQAKAGVINMDKSESM (V) (SEQ ID NO: 5) IKLSGGVQAKAGVINMFKSESY (VI) (SEQ ID NO: 6) IKLSGGVQAKAGVINMFKSESYK (VII) (SEQ ID NO: 7) GVQAKAGVINMFKSESY (VIII) (SEQ ID NO: 8) GVRAKAGVRNMFKSESY (IX) (SEQ ID NO: 9) GVRAKAGVRN(Nle)FKSESY (X) (SEQ ID NO: 10) YKSLRRKAPRWDAPLRDPALRQLL (XI) (SEQ ID NO: 11) YKSLRRKAPRWDAYLRDPALRQLL (XII) (SEQ ID NO: 12) YKSLRRKAPRWDAYLRDPALRPLL (XIII) (SEQ ID NO: 13) wherein X_1 to X_{21} and n can have various different values and wherein at least one protecting group and/or at least one labelling agent is optionally connected to said peptide compound at an N- and/or C-terminal end.

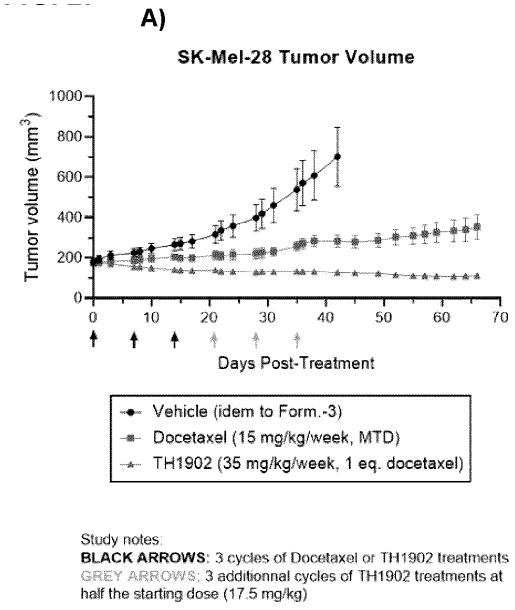

21: 2022/06205. 22: 2022/06/03. 43: 2026/09/09
51: A01N; A01P
71: UPL Corporation Limited, UPL Europe Ltd

72: ALESSANDRO, Mariani, BRUNO, Wolffenbuttel Carloto, LUIS, Gustavo Rodrigues Gonella, KIM, Gary Watson
33: IN 31: 201921050091 32: 2019-12-05
54: FUNGICIDAL COMBINATIONS
00: -
Disclosed herein are fungicidal combinations comprising at least one SDHI fungicide and at least two systemic fungicides and compositions comprising said combinations. Also provided is a method of controlling fungal diseases with said combinations.

21: 2022/07683. 22: 2022/07/11. 43: 2026/08/31
51: G01R; H01B
71: Copperweld Bimetallics LLC
72: JORDAN, Jeffrey Thomas
33: US 31: 62/965,059 32: 2020-01-23
54: GROUND CABLE WITH VISUAL INDICATOR
00: -
A ground cable may comprise a plurality of strands. Inner core strands of the cable may be surrounded by an adjacent outermost layer or wrap of outer wrap strands. The outer wrap of strands may comprise at least one indicator strand, which may comprise an indicator finish on a portion of its surface. A characteristic of the indicator finish may change when exposed to a current level that exceeds an electrical fault threshold.

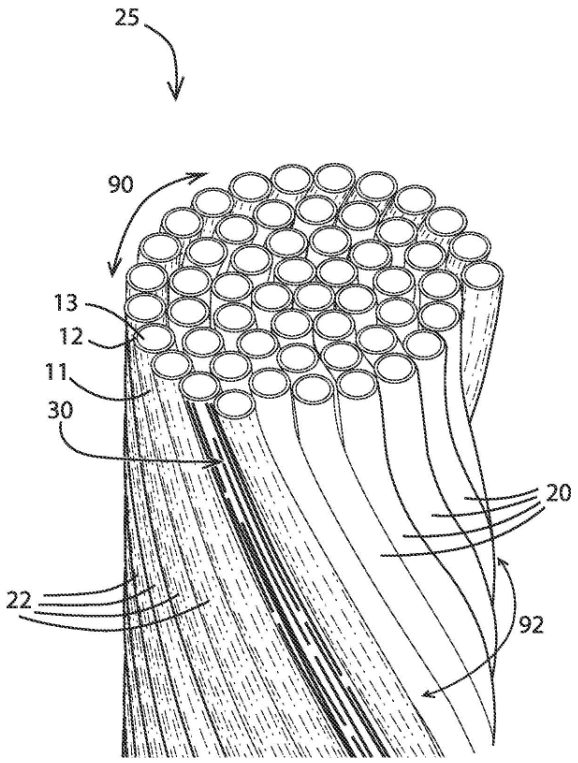

21: 2022/07797. 22: 2022/07/13. 43: 2026/10/12
51: B29C; F16L
71: HEINEKEN SUPPLY CHAIN B.V.
72: PETERS, Cornelis, VAN DER AA, Michiel Adrianus Henricus
33: NL 31: 2024972 32: 2020-02-21
54: METHOD FOR JOINING A FLUID CONDUIT AND A CONNECTION HUB
00: -
Method for joining a fluid conduit and a connection hub. There is provided a method for joining a fluid conduit 2 and a connection hub 7, wherein a fluid 2 conduit is provided having an at least partially transparent end section 1. Also provided is a connection hub 7 comprising a hub cavity 9 having a shape complementary to a shape of the end section of the fluid conduit 1. The end section of the fluid conduit 1 is at least partly introduced into the hub cavity 9 through an opening in the hub, wherein a contact interface between at least a lateral wall part of the end section 1 and a hub cavity 9 wall is established. The method includes heating a target zone 27 in the contact interface, for joining the fluid conduit 2 and the connection hub 7 at the target zone 27, by directing a light beam 29 across the at least partially transparent end section 1 of the fluid

conduit 2 from a side of the fluid conduit 2 which is opposite a side of the target zone 27.

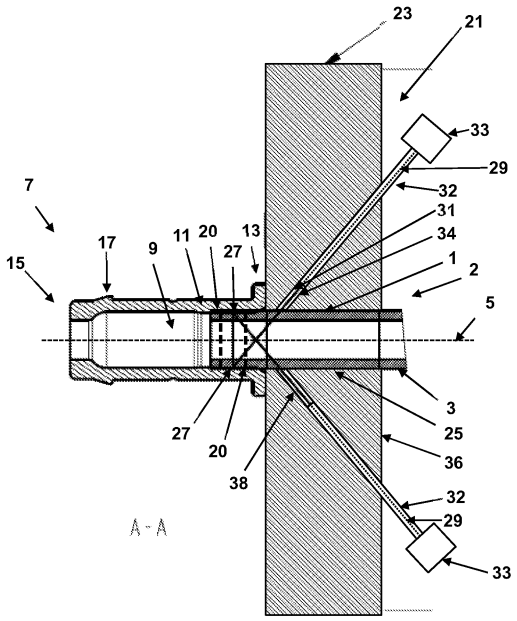

21: 2022/07921. 22: 2022/07/15. 43: 2026/11/11
51: G01B; G01N; G08G; H04B; G06N
71: Motion Metrics International Corp.
72: TAFAZOLI BILANDI, Shahram, NOURANIAN, Saman, TURNER, Glen Richard Floyd, CHU, Haobing, CHOW, Enoch, KARIMIFARD, Saeed, SAMETI, Mohammad
33: US 31: 62/949,299 32: 2019-12-17

54: APPARATUS FOR ANALYZING A PAYLOAD BEING TRANSPORTED IN A LOAD CARRYING CONTAINER OF A VEHICLE

00: -

An apparatus for analyzing a payload being transported in a load carrying container of a vehicle is disclosed. The apparatus includes a camera disposed to successively capture images of vehicles traversing a field of view of the camera. The apparatus also includes at least one processor in communication with the camera, the at least one processor being operably configured to select at least one image from the successively captured images in response to a likelihood of a vehicle and load carrying container being within the field of view in the at least one image, and image data associated with the least one image meeting a suitability criterion for further processing. The further processing includes causing the at least one processor to process the selected image to identify a payload region of interest within the image and to generate a payload analysis within the identified payload region of interest based the image data associated with the least one image.

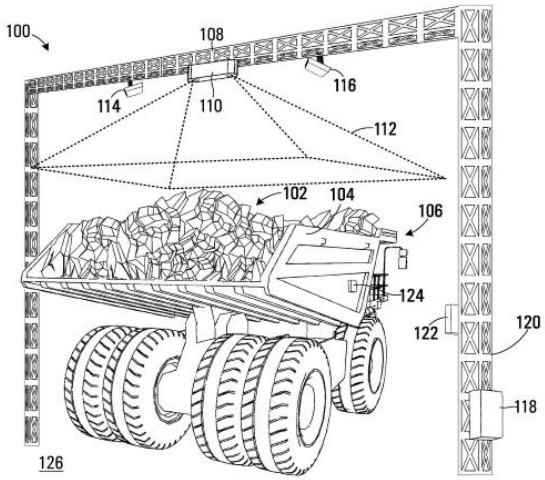

21: 2022/08591. 22: 2022/08/01. 43: 2026/09/02
51: C22B; C01G
71: AVANTI MATERIALS LTD
72: ROBINSON, DAVID, URBANI, MARK DANIEL
33: AU 31: 2020900699 32: 2020-03-06
33: AU 31: 2020904441 32: 2020-11-30
33: AU 31: 2020900347 32: 2020-02-07
33: AU 31: 2020902038 32: 2020-06-19

54: RECOVERY OF VANADIUM FROM ALKALINE SLAG MATERIALS

00: -

A method for the recovery of vanadium from a vanadium containing feed stream, the method comprising the steps of: subjecting the vanadium feed stream to a leach step, the leach step comprising contacting the vanadium feed stream with an alkaline carbonate leach solution to form a leach slurry comprising a pregnant leach solution containing vanadium and a solid residue; passing the leach slurry to a solid/liquid separation step to produce a pregnant leach solution containing vanadium; and recovering a vanadium product from the pregnant leach solution.

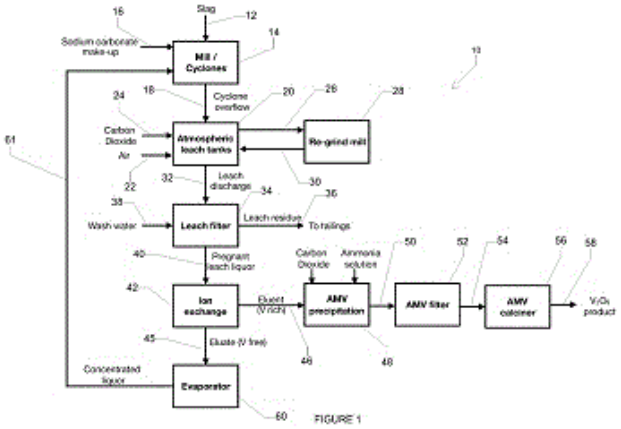

FIGURE 1

21: 2022/08946. 22: 2022/08/10. 43: 2026/09/02
51: C07D; A01N
71: FMC CORPORATION
72: LONG, JEFFREY KEITH, HIE, LIANA
33: US 31: 62/976,573 32: 2020-02-14
54: SUBSTITUTED 5,6-DIPHENYL-3(2H)-PYRIDAZINONES FOR USE AS FUNGICIDES
00: -
Disclosed are compounds of Formula (1) including all geometric and stereoisomers,*N*-oxides, and salts thereof, wherein W, R^1, R^2, R^3, R^4, R^5m, n and p are as defined in the disclosure. Also disclosed are compositions containing the compounds of Formula (1) and methods for controlling plant disease caused by a fungal pathogen comprising applying an effective amount of a compound or a composition of the invention.

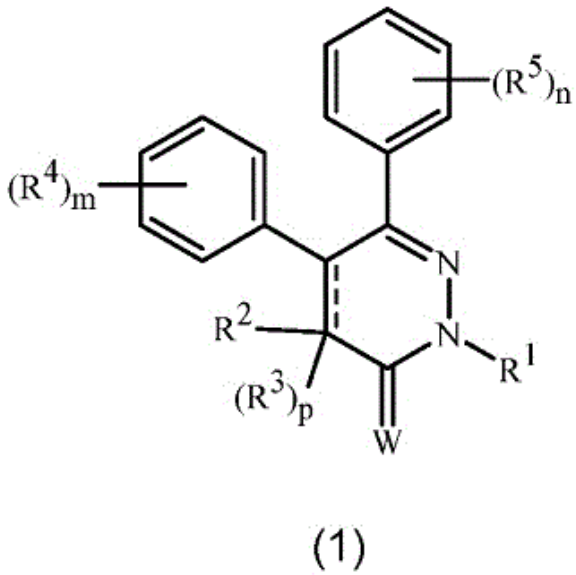

(1)

21: 2022/09059. 22: 2022/08/12. 43: 2026/09/02
51: H04W
71: INTERDIGITAL PATENT HOLDINGS, INC.
72: FREDA, MARTINO, DENG, TAO, LEE, MOON IL, HOANG, TUONG, PELLETIER, GHYSLAIN, MARINIER, PAUL, RAO, JAYA
33: US 31: 63/125,446 32: 2020-12-15
33: US 31: 63/061,388 32: 2020-08-05
33: US 31: 63/090,992 32: 2020-10-13
33: US 31: 62/975,238 32: 2020-02-12
33: US 31: 62/985,604 32: 2020-03-05
54: METHODS FOR PERFORMING DISCONTINUOUS RECEPTION ON SIDELINK
00: -
A method for determining a DRX operation in a wireless transmit receive unit (WTRU) that has information indicating multiple DRX configurations, includes selecting a first DRX configuration from the multiple DRX configurations based on a first cast type and an associated first quality of service (QoS) information for a first sidelink radio bearer (SLRB) configuration, selecting a second DRX configuration from the multiple DRX configurations based on a second cast type and an associated second QoS information for a second SLRB configuration, determining a sidelink monitoring time based on a combination of an active time associated with the first DRX configuration and an active time associated with the second DRX configuration, and monitoring a sidelink control channel using the determined sidelink monitoring time.

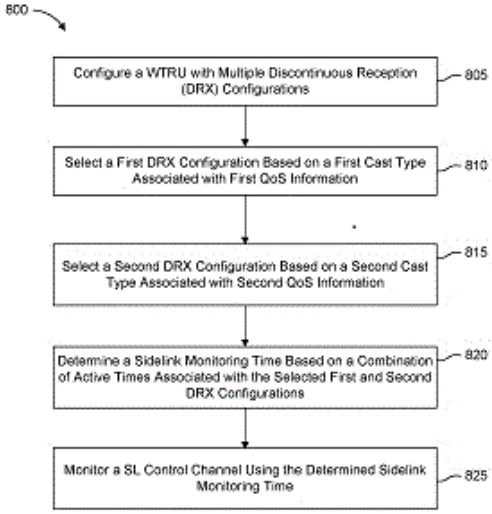

21: 2022/09078. 22: 2022/08/12. 43: 2026/10/12

51: A61K
71: LIPOID GMBH
72: VAN HOOGEVEST, Peter, HEIDECKE, Christoph
33: EP 31: 20162785.8 32: 2020-03-12
54: SUNFLOWER PHOSPHOLIPID COMPOSITION CONTAINING PHOSPHATIDYLCHOLINE
00: -
The present invention relates to sunflower phospholipid compositions containing phosphatidylcholine and containing less than 0.1% by weight, in particular less than 0.08% by weight or less than 0.05% by weight and especially less than 0.02% by weight of chlorogenic acids, based on the total weight of the sunflower phospholipid composition, and combination thereof with at least one anionic stabilizer compound comprising at least one anionic phospholipid compound. These combinations are particularly useful as emulsifiers in aqueous oil-in-water emulsions. The present invention also relates to aqueous oil-in- water emulsions containing such combinations of a sunflower phospholipid composition with at least one anionic stabilizer compound comprising at least one anionic phospholipid compound. The invention also relates to a method for the production of such emulsions. The present invention relates in particular to sunflower phospholipid compositions containing an amount of phosphatidylcholine of 45% by weight or higher and having a low content of chlorogenic acids of less than 0.1% by weight and at least one anionic phospholipid compound.

21: 2022/09128. 22: 2022/08/15. 43: 2026/09/02
51: A61K; C12N
71: GESVAL S.A.
72: TWIZERE, JEAN-CLAUDE, KERSELIDOU, DESPOINA
33: EP 31: 20158875.3 32: 2020-02-21
54: DEPLETION OF EXT1 EXPRESSION AND/OR ACTIVITY IMPROVES CELLULAR PRODUCTION OF BIOLOGICAL ENTITIES
00: -
The present invention relates to the use of an inhibitor of EXT1 expression and/or activity for the production of a biological entity in a cell. The invention also relates to the use of a cell having at least depleted EXT1 expression and/or activity for the production of a biological entity. The inventors provide herein evidences about the role of glycosylation in rapid dynamism of ER shaping and function. In particular, depletion of EXT1 results in a recomposed ER shaping, which could benefit production of recombinant proteins.

21: 2022/09178. 22: 2022/08/16. 43: 2026/09/02
51: C07D; A61P; A61K
71: TES PHARMA S.R.L.
72: PELLICCIARI, ROBERTO
33: US 31: 62/981,418 32: 2020-02-25
33: US 31: 63/139,262 32: 2021-01-19
54: HETEROCYCLIC COMPOUNDS FOR MODULATING NR2F6
00: -
The present disclosure relates to compounds capable of modulating the activity of NR2F6. The compounds of the disclosure may be used in methods for the prevention and/or the treatment of diseases and disorders associated with modulating NR2F6 activity.

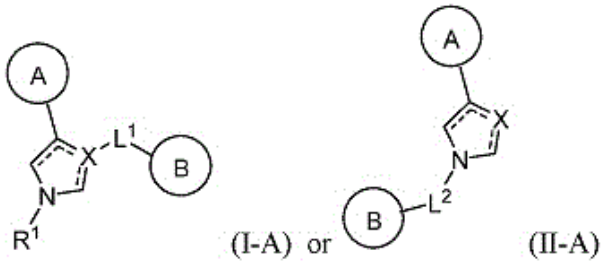

21: 2022/09185. 22: 2022/08/16. 43: 2026/09/02
51: A61K; A61P
71: THE UNIVERSITY OF SYDNEY, SYDNEY LOCAL HEALTH DISTRICT
72: COGGER, VICTORIA CARROLL, LE COUTEUR, DAVID GEORGE, HUNT, NICHOLAS
33: AU 31: 2020900129 32: 2020-01-17
54: ORAL PEPTIDE ADMINISTRATION
00: -
The present invention relates to compositions and methods facilitating the non-invasive administration (such as oral administration) of therapeutic proteins or peptides (such as insulin) which maintain biological activity when absorbed. The composition of the present invention comprises a therapeutic amount of a conjugate, wherein the conjugate comprises a quantum dot and a therapeutically effective peptide or protein.

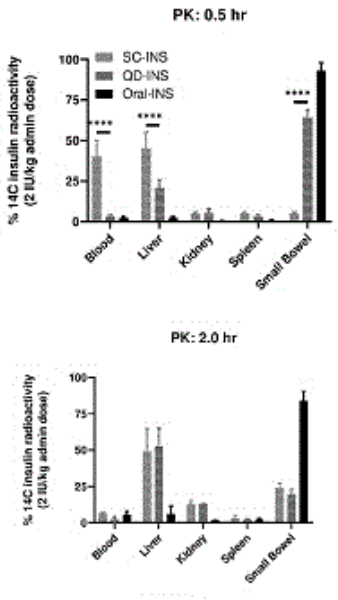

21: 2022/09244. 22: 2022/08/17. 43: 2026/09/02
51: C22B; C25C
71: ENGITEC TECHNOLOGIES S.P.A.
72: MACCAGNI, MASSIMO GIUSEPPE, GUERRINI, EDOARDO, GRASSI, ANDREA
33: IT 31: 102020000002515 32: 2020-02-10
54: METHOD FOR RECOVERING METAL ZINC FROM SOLID METALLURGICAL WASTES
00: -
The present invention relates to a method for recovering metal zinc from a solid metallurgical waste containing zinc and manganese, comprising the steps of: a. bringing said solid metallurgical waste into contact with an aqueous leaching solution comprising chloride ions and ammonium ions to produce at least one leachate comprising zinc ions and manganese ions and at least one insoluble solid residue; b. cementing said leachate, by adding metal zinc as a precipitating agent, to eliminate at least one metal other than zinc and manganese possibly present in said leachate in form of ions and producing a purified leachate; c. subjecting said purified leachate to electrolysis in an electrolytic cell comprising at least one cathode and at least one anode immersed in said purified leachate to deposit metal zinc on said cathode and producing at least one exhausted leachate; said method comprising, before said electrolysis, a step of precipitating manganese ions by oxidation with permanganate ions and subsequent separation of a precipitate comprising MnO_2.

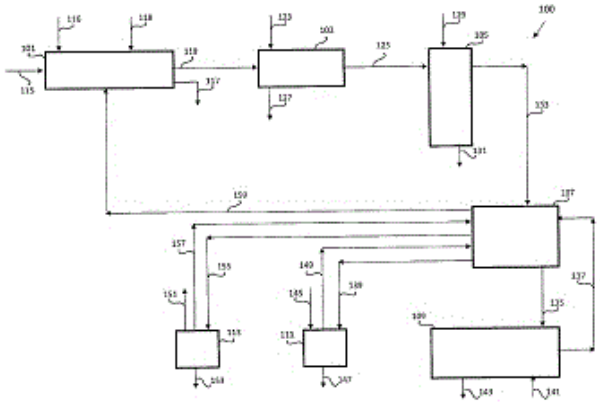

21: 2022/09299. 22: 2022/08/18. 43: 2026/09/02
51: C12Q
71: THE JOHNS HOPKINS UNIVERSITY
72: PAPADOPOULOS, NICKOLAS, KINZLER, KENNETH W, VOGELSTEIN, BERT, COHEN, JOSHUA DAVID
33: US 31: 62/977,066 32: 2020-02-14
54: METHODS AND MATERIALS FOR ASSESSING NUCLEIC ACIDS
00: -
Provided herein are systems, kits, compositions and methods for sequencing library preparation and sequencing workflow (e.g., for the identification of mutations). In certain embodiments, provides herein systems and methods to identically barcode both strands of templates, and PCR-based enrichment of each strand that does not require hybridization capture.

21: 2022/09443. 22: 2022/08/23. 43: 2026/09/08
51: C07K; A61P; A61K
71: GENENTECH, INC.
72: NAKAMURA, GERALD R, SESHASAYEE, DHAYA, VAN LOOKEREN CAMPAGNE, MENNO, WONG, TIFFANY, XI, HONGKANG, BEVERS, JACK III, CHAN, HIU NAM, COMPS-AGRAR, LAETITIA, CORPUZ, RACQUEL, WU, JIA
33: US 31: 62/989,526 32: 2020-03-13
33: US 31: 63/022,080 32: 2020-05-08
54: ANTI-INTERLEUKIN-33 ANTIBODIES AND USES THEREOF
00: -
The invention provides interleukin-33 (IL-33) antibodies and methods of making and using the same, e.g., for treatment of IL-33 mediated disorders (e.g., ocular disorders such as AMD (e.g., geographic atrophy (GA)).

21: 2022/09522. 22: 2022/08/25. 43: 2026/09/02
51: C07K; G01N
71: PROSMEDIC SWEDEN AB
72: WALDENSTRÖM, ANDERS, LARSSON, ANDERS
33: EP 31: 20160712.4 32: 2020-03-03

54: NEW METHOD AND COMPOUND FOR PROSTATE CANCER DIAGNOSIS

00: -

The present disclosure relates human antibodies, or antigen binding fragments thereof, able to bind prostasomes, and to prostate cancer diagnosis and prognosis. More specifically, the proposed technique relates to methods for diagnosing prostate cancer using human antibodies, or antigen binding fragments thereof, for detecting prostasomes in body fluids. The disclosure comprises human antibodies able to specifically and selectively detect prostasomes in body fluids, and methods for diagnosing prostate cancer using the human antibodies. The disclosure further comprises providing prognosis, evaluating the severity of the prostate cancer and determining the efficacy of a medical treatment of the prostate cancer.

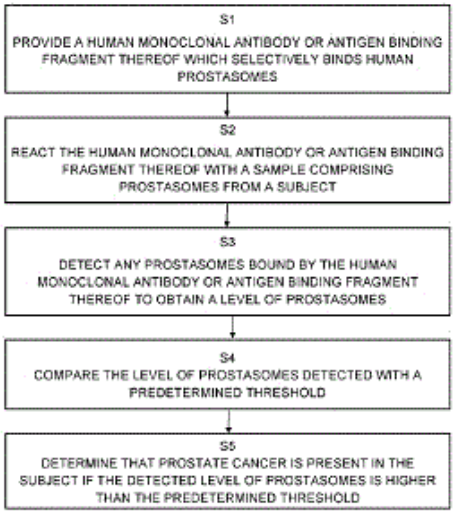

21: 2022/09523. 22: 2022/08/25. 43: 2026/09/02
51: H04L; H04W; H04M
71: WIREPAS OY
72: PIRSKANEN, JUHO, KASEVA, VILLE
33: FI 31: 20205231 32: 2020-03-04

54: ADDRESSING SYSTEM FOR A WIRELESS COMMUNICATION NETWORK

00: -

The application relates to an addressing system (100) for a wireless communication network (102). The system comprises a first communication device (104a) and a second communication device (104b). The first and second communication devices (104a, 104b) belong to a group of plurality of communication devices (104, 104a, 104b) of the network. Each communication device (104, 104a, 104b) is configured to provide a bi-directional radio communication with at least one of the plurality of communication devices. Each communication device has (322) a long node identifier (L-ID) for addressing said communication device (104, 104a, 104b) and for being used in at least one security procedure of communication in the network. Each communication device is configured to generate (328) a short node identifier (S-ID) for identifying said communication device in a dedicated communication between it and other communication device (104, 104a, 104b) belonging to the plurality of communication devices. Each communication device is configured to include (330, 338, 342, 344) at least its generated short node identifier as a transmitter address into a control part (214) of a communication packet (208) for informing the transmitter of the communication packet to its receiver, and at least its long node identity into another part (216) of the communication packet for securing a security of theirs communication.

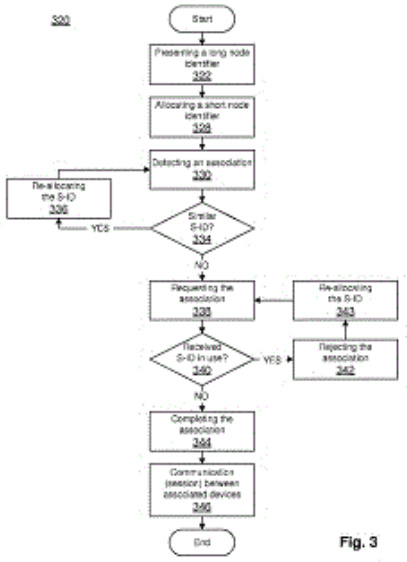

Fig. 3

21: 2022/09724. 22: 2022/08/31. 43: 2026/09/09
51: B32B; C08K
71: BASF SE
72: WEYLAND, Tania, LIPS, Gerard, VILLENEUVE, Sebastien, VITALI, Manuele
33: EP 31: 20156386.3 32: 2020-02-10
54: LIGHT STABILIZER MIXTURE
00: -
A stabilizer mixture comprising a sterically hindered amine light stabilizer, a triazine UV absorber and a benzophenone UV absorber.

21: 2022/09725. 22: 2022/08/31. 43: 2026/09/16
51: C07C; A61K; A61P
71: GENFIT
72: BERTRAND, Karine, DELHOMEL, Jean-François, ROUDOT, Alice
33: EP 31: PCT/EP2020/053359 32: 2020-02-10
54: POLYMORPHS OF ELAFIBRANOR
00: -
The present invention relates to novel crystalline forms of elafibranor.

21: 2022/09749. 22: 2022/08/31. 43: 2026/08/25
51: A61K; A61P; C07D
71: 3+2 Pharma, LLC
72: RUAN, Fuqiang
33: US 31: 62/988,827 32: 2020-03-12
54: CBP/CATENIN SIGNALING PATHWAY INHIBITORS AND USES THEREOF
00: -
Provided are compounds of formula (Ia), (Ib) and (IIa), and pharmaceutically acceptable salts thereof. Additionally provided are compositions and pharmaceutical compositions comprising the compounds, therapeutic methods using same for modulating (e.g., inhibiting) CREB binding protein (CBP)/ß-catenin mediated signaling in treating a condition, disease or disorder (e.g., fibrosis, cancer, neurological conditions, metabolic disorders (e.g., diabetes, etc.), and skin conditions (dermatitis, psoriasis, scarring, alopecia, etc.) mediated by aberrant CBP/ß -catenin signaling, and cosmetic methods for treating skin conditions (e.g., aging, etc.). Additionally provided are methods for enhancing vaccine efficacy using the compounds and compositions. Further provided are methods for efficiently synthesizing a clinical grade drug, comprising use, in a penultimate, or last reaction step under GMP conditions, of an intermediate 2-propynyl-compound to form a clinical grade isoxazole derivative (e.g., via 3+2 cycloaddition).

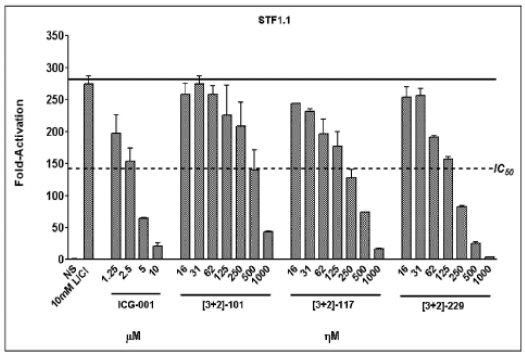

21: 2022/09967. 22: 2022/09/07. 43: 2026/09/14
51: H04L; H04W
71: ONOMONDO APS
72: JØRGENSEN, Henrik, Aagaard, KARLSEN, Michael
33: DK 31: PA 2020 70083 32: 2020-02-13
54: IMPROVED PACKET TRANSFER
00: -
Interrelated computing devices and systems require ever more powerful devices to meet growing encryption demands. This is improved by providing a computer-implemented method comprising: receiving a packet (50) from a user equipment (10) through an access network (20) of a telecommunications network (1), the packet (50) having a subscriber identity of said user equipment (10) and a telecom encryption layer (52) compliant with cryptographic protocols of the telecommunications network (1); decrypting the telecom encryption layer (52) of said packet (50) according to protocols of said telecommunications network (1) using said subscriber identity in a network core (30) of said telecommunication network (1); finding a predetermined action stored in an action database (31) of said network core (30) pre-associated with said subscriber identity of said packet (50); and performing said predetermined action on said packet (50) in said network core (30).

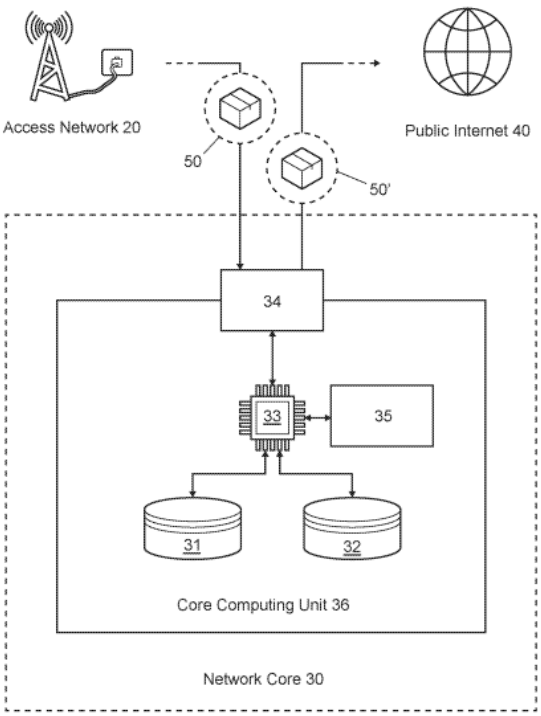

21: 2022/09971. 22: 2022/09/07. 43: 2026/09/09
51: A23L; A61K
71: BASF SE
72: MUSAEUS, Nina, FELDTHUSEN JENSEN, Jesper, SOENDERGAARD, Claus, SUBINYA ALBRICH, Mireia, CHU, Fangfang
33: EP 31: 20157973.7 32: 2020-02-18
54: STABLE FAT-SOLUBLE VITAMIN POWDERS
00: -
Stable vitamin A powders. The present invention relates to BHT-free powderous formulations comprising a fat-soluble-vitamin or a carotenoid, a hydrocolloid, a starch hydrolysate, tocopherol and sodium ascorbate and its use for staple food fortification.

21: 2022/09973. 22: 2022/09/07. 43: 2026/09/16
51: H05B
71: BASF SE, LINDE GMBH
72: SHUSTOV, Andrey, JENNE, Eric, KOCHENDOERFER, Kiara, Aenne
33: EP 31: 20157516.4 32: 2020-02-14
54: DEVICE AND METHOD FOR HEATING A FLUID IN A PIPELINE WITH SINGLE-PHASE ALTERNATING CURRENT
00: -
A device (110) for heating a fluid is proposed. The device comprises - at least one electrically conductive pipeline (112) and/or at least one electrically conductive pipeline segment (114) for accommodating the fluid, and - at least one single-phase alternating-current and/or at least one single-phase alternating-voltage source (126), wherein each pipeline (112) and/or each pipeline segment (114) is assigned a respective single-phase alternating-current and/or a respective single-phase alternating-voltage source (126) which is connected to the respective pipeline (112) and/or to the respective pipeline segment (114), wherein the respective single-phase alternating-current and/or single-phase alternating-voltage source (126) is designed to generate an electrical current in the respective pipeline (112) and/or in the respective pipeline segment (114), which electrical current warms the respective pipeline (112) and/or the respective pipeline segment (114) by Joule heat, which arises as the electrical current passes through conductive pipe material, in order to heat the fluid, wherein the single-phase alternating-current and/or the single-phase alternating-voltage source (126) is connected in electrically conductive fashion to the pipeline (112) and/or to the pipeline segment (114) such that the generated alternating current flows via a forward conductor (128) into the pipeline (112) and/or the pipeline segment (114) and flows back via a return conductor (130) to the alternating-current and/or alternating-voltage source (126).

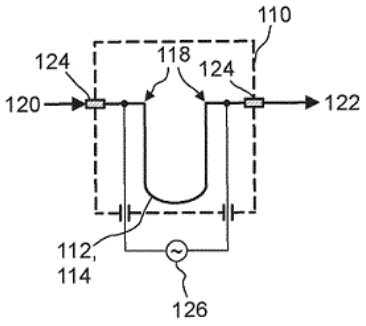

21: 2022/11063. 22: 2022/10/10. 43: 2026/11/03
51: A01D; A01F
71: BUSHEL PLUS LTD.
72: KRINGE, Marcel, SOBCHUK, Christopher, Allen
33: US 31: 62/988,164 32: 2020-03-11
54: METHOD AND APPARATUS FOR DETERMINING COMBINE EFFICIENCY
00: -

A system to detect grain loss of a harvester during harvesting operations. The system includes at least two pans magnetically supported on the harvester above a ground surface, by separate electromagnets being electrically isolated from a power source while magnetically supporting the at least two pans. A signal controller generates a release signal when triggered by a user. A signal receiver responsive to the generated release signal electrically connects one of the electromagnets with the power source causing one of the at least two pans to be released to the ground surface while the second electromagnet remains electrically isolated from the power source and magnetically supported on the combine harvester until another release signal is triggered by the user causing the signal receiver to electrically connect the second electromagnet with the power source to release the second pan to the ground surface.

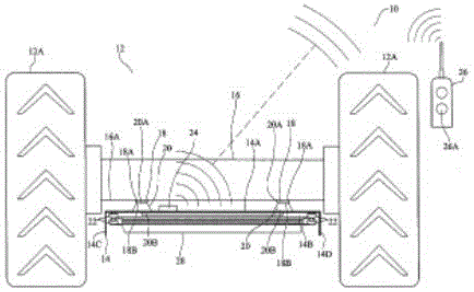

21: 2022/12749. 22: 2022/11/23. 43: 2026/09/09
51: A61M
71: OSAA INNOVATION APS
72: HESSAM, Ahmed, Abdullah
33: DK 31: PA 2020 70274 32: 2020-04-30

54: AN ASSEMBLY AND A SYSTEM SUITABLE FOR DISPENSING A LIQUID FROM A COMPRESSIBLE BAG

00: -

An assembly and a system suitable for dispensing liquid from a compressible bag, such as for IV treatment of a patient. The assembly includes an apparatus and a flexible mat. The apparatus includes a housing with a dispensing end and an opposite rear end, a floor comprising a flat floor surface, a pair of parallel guiding tracks and a roller arrangement including a roller body. The roller arrangement has a first roller arrangement end and a second roller arrangement end respectively engaged with the respective guiding tracks. The mat has a first mat end, which is mounted to or adapted to be mounted to the roller body and the mat is located at least partly on the flat floor between said guiding tracks.

Fig. 3b

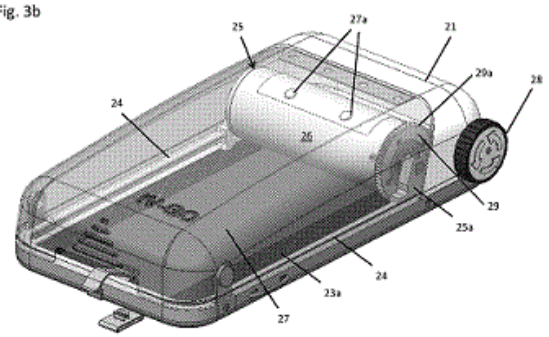

21: 2022/13683. 22: 2022/12/19. 43: 2024/08/15
51: A01D; A01G
71: AGROTRITUS LOCACAO E COMERCIO EIRELI
72: RIBEIRO, Manuel
33: BR 31: BR202020011537-0 32: 2020-06-09

54: IMPROVEMENT EMBEDDED IN AGRICULTURAL EQUIPMENT

00: -

The present request of Utility Model Patent, essentially characterized by a woody vegetation suppressor equipment, being a forest implement, whose function consists in acting in the grinding of woody vegetation, bushes, grass, stumps and pruning remains; it is composed by a metallic structure all reinforced in steel, with a hitch on the three points of the tire tractor, drive cardan, bidirectional transmission box with lateral transmission made with belts and pulleys and at the bottom an axle with displaced knives; the equipment is coupled in the front part in a tire tractor, where it is driven by the tractor's power take-off, the power take-off turns in high rotation through the main and secondary transmission, drives the cutting system making the axle underneath the equipment that is equipped with cutting blades reach a high torque, being able to shred all the vegetation that comes in contact with it; The benefit is to mechanize the process of clearing vegetation, using shredding instead of traditional burning, providing a faster and more environmentally friendly operation, and an increase in productivity compared to traditional methods.

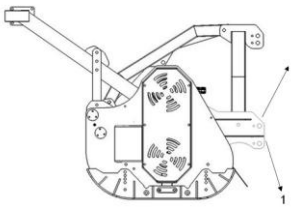

21: 2023/01137. 22: 2023/01/27. 43: 2026/11/09
51: C07C
71: FRAUNHOFER-GESELLSCHAFT ZUR FÖRDERUNG DER ANGEWANDTEN FORSCHUNG E.V.
72: MANTEI, Franz, OUDA, Mohamed, SCHAADT, Achim
33: DE 31: 10 2020 118 386.0 32: 2020-07-13
54: METHOD FOR PRODUCING POLYOXYMETHYLENE DIMETHYL ETHERS
00: -
The invention relates to a method for producing polyoxymethylene dimethyl ethers, having the following steps: - reacting formaldehyde and methylal (OME1) in a reactor R1, thereby obtaining a product mixture, - separating the product mixture, by means of distillation in a distillation unit D1, into a head stream, which contains OME1, OME2, formaldehyde, methanol, and water, and a sump stream, which contains OME=3, - mixing the head stream drawn from the distillation unit D1 with a methanol-containing stream, - treating the mixture in a reactive distillation unit RD2, thereby forming a head stream, which contains methylal, and a water-containing sump stream, and - introducing the sump stream drawn from the distillation unit D1 into a distillation unit D3 and separating the polyoxymethylene dimethyl ether by means of distillation.

21: 2023/01596. 22: 2023/02/08. 43: 2026/09/03
51: C12N; C12P
71: HUNAN LIER BIOTECH CO., LTD.
72: XIE, XINKAI, XU, WEI, FAN, JUNYING
33: CN 31: 202010659106.8 32: 2020-07-09
54: MODIFIED GLUTAMATE DEHYDROGENASE AND USE THEREOF
00: -
Provided is modified glutamate dehydrogenase (GluDH). In particular, the modified GluDH provided has an improved activity of catalyzing PPO to react with an amino donor to generate L-glufosinate-ammonium and/or has an improved kinetic property. Further provided are a polynucleotide for encoding the modified GluDH, a vector and host cell for expressing the modified GluDH of the present invention, and a method for producing L-glufosinate-ammonium by means of using the modified GluDH and the host cell.

21: 2023/03239. 22: 2023/03/01. 43: 2026/11/03
51: G06Q
71: VISA INTERNATIONAL SERVICE ASSOCIATION
72: KURLAS, Nicholas Bryan, KHUMALO, Nkanyiso, POONJA, Sameer Shiraz
33: US 31: 63/078,788 32: 2020-09-15
54: SYSTEM, METHOD, AND COMPUTER PROGRAM PRODUCT FOR OPERATING A GROUP TRANSACTION NETWORK
00: -
A method for operating a private group transaction network, includes: receiving a group creation request; communicating a group invitation to each of the group members; receiving a plurality of group acceptance messages, one from each of the group members, where each group acceptance message includes an account identifier associated with a payment account of an associated group member, where a group member has a payment account issued by an issuer system different from at least one of the issuer systems of the other group members; generating the private group transaction network; processing an intra-group transfer request by: executing a plurality of pull transfers by pulling the transfer amount from the first and second payment accounts to the group payment account; and executing a single push transfer for the transfer amount by pushing the transfer amount from the group payment account to the third payment account.

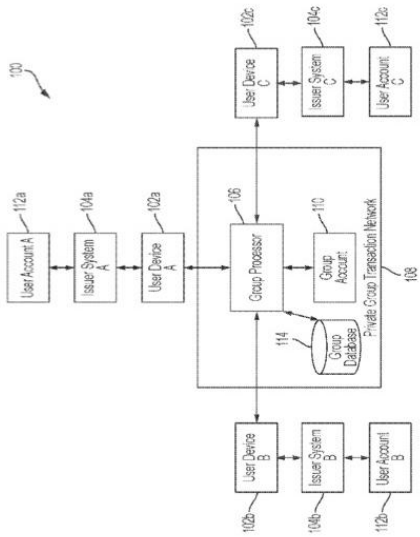

21: 2023/03544. 22: 2023/03/13. 43: 2026/09/17
51: A01N; A01P
71: UPL Limited
72: MALI, Ankush, MORE, Pravin Namadeo, SHIRSAT, Rajan Ramakant
33: IN 31: 202021035156 32: 2020-08-14
54: A STORAGE STABLE INSECTICIDAL COMPOSITION
00: -
The present invention relates to an insecticidal composition comprising lambda-cyhalothrin with other active ingredients. The insecticidal composition of the present invention is storage stable. The present invention also describe process of preparation and methods of use of the same.

21: 2023/04228. 22: 2023/04/06. 43: 2026/09/18
51: A01N; A01P
71: UPL Limited
72: DAS, Kuntal
33: IN 31: 202021029192 32: 2020-09-09
54: FUNGICIDAL COMBINATION
00: -
The present invention provides fungicide combinations and compositions to improve the spectrum of plant disease control, with the use curative and preventive actives at a lower dosage. More particularly, the present invention provides a fungicidal combination comprising captan and a second fungicide. The present invention further provides methods of controlling and/or suppressing phytopathogenic fungi and maintaining crop health.

21: 2023/04554. 22: 2023/04/19. 43: 2026/09/18
51: A61F
71: Essity Hygiene and Health Aktiebolag
72: KRAJEWSKI, Stephan, HASS, Oliver, VAN DEN BERG, Emma, GENGLER, Daphne
33: EP(SE) 31: 20206382.2 32: 2020-11-09
54: WRIST BRACE
00: -
The present invention relates to an orthosis adapted to be worn on a human forearm and hand for stabilizing the wrist joint, comprising a stiff body having an exostructure enclosing an elongated core, wherein the stiff body comprises (i) a metacarpal section, having a ring-shaped or ring-segment-shaped thumb holding section adapted to receive the thumb of the human hand, having a palmar section adapted to be brought into engagement with the palm of the human hand, and having a ulnar section adapted to wrap around the human hand from the volar to the dorsal side, (ii) an elongated middle section adapted to be brought into engagement with the human forearm on its medial or lateral side, and (iii) a forearm section adapted to wrap around the human forearm from its ventral to its dorsal side.

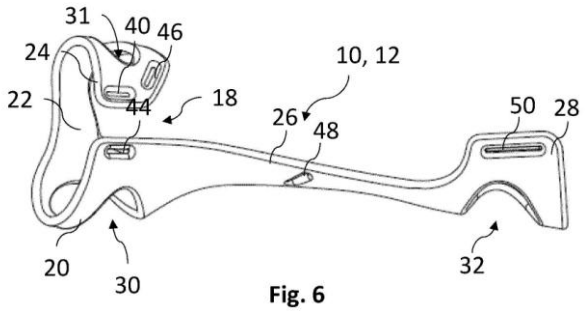

Fig. 6

21: 2023/04609. 22: 2023/04/20. 43: 2026/09/18
51: A01N; A01P
71: UPL Corporation Limited, UPL Europe Ltd
72: PIROTTE, Alan, HAWKINS, Emma Louise
33: GB 31: 2014871.4 32: 2020-09-21
54: STABLE HERBICIDAL COMPOSITIONS
00: -
Described herein are stable herbicidal compositions including at least one cyclohexenedione oxime herbicide or an agriculturally acceptable salt thereof; and a stabilizer system comprising a dialkyl metal sulfosuccinate and a sorbitan fatty acid ester. A process of preparing the stable herbicidal

composition and a method of controlling weeds by applying the stable herbicidal composition onto a weed, a crop, a locus, or a habitat area are also disclosed.

21: 2023/04725. 22: 2023/04/24. 43: 2026/09/18
51: H04N
71: QUALCOMM Incorporated
72: CHEN, Chun-Chi, HUANG, Han, ZHANG, Zhi, SEREGIN, Vadim, KARCZEWICZ, Marta
33: US 31: 63/131,676 32: 2020-12-29
54: TEMPLATE MATCHING IN VIDEO CODING
00: -
A video decoder may be configured to determine a motion vector and a motion vector precision for a current block; identify a current block template within the current picture; search within a search area for a final reference block template that corresponds to the current block template, wherein to search within the search area, the one or more processors are further configured to: identify an initial reference block template based on the motion vector, search other reference block templates around the initial reference block template using a step size that is set to an initial step size, and iteratively reduce the step size from the initial step size until the step size is set to a final step size that equals the motion vector precision; determine a prediction block for the current block based on the final reference block template.

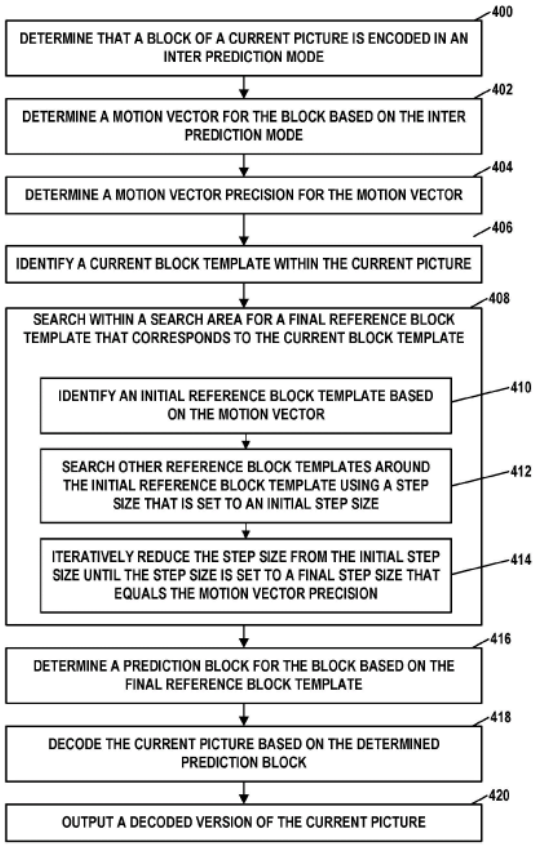

21: 2023/04832. 22: 2023/04/26. 43: 2026/09/18
51: A01N
71: UPL do Brasil Industria e Comercio de Insumos Agropecuarios S.A., UPL Corporation Limited
72: LENZ, Giuvan, SILVA, Ferdinando Marcos Lima
33: BR 31: 102020019865-3 32: 2020-09-28
54: COMBINATIONS OF TRIAZINONE HERBICIDES WITH SAFENERS
00: -
The present invention describes a combination for the selective control of weeds, more particularly, the present invention relates to a combination of one or more triazinone herbicides with one or more safeners for the selective control of weeds.

21: 2023/05018. 22: 2023/05/05. 43: 2026/09/18
51: A61K; C07D
71: Napa Therapeutics Ltd., Buck Institute for Research on Aging
72: VOLKMANN, Robert A., COE, Jotham W., VERDIN, Eric, PERRONE, Rosalba, JACKSON, Margaret, NELSON, Frederick R., SILVA, Elena, FELSTEAD, Steve
33: US 31: 63/089,818 32: 2020-10-09

54: HETEROARYL AMIDE INHIBITORS OF CD38
00: -
Disclosed are heteroaryl amide inhibitors of CD38 and methods of making and using the same in disease and disorder treatment.

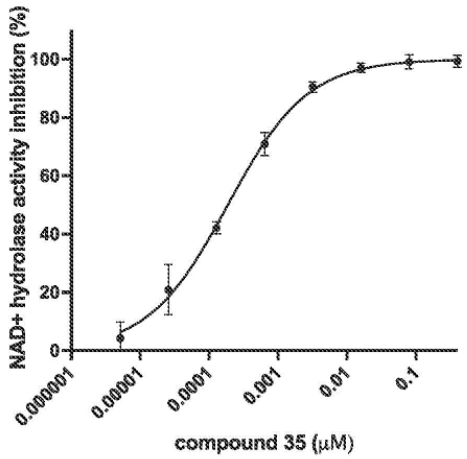

FIG. 1A

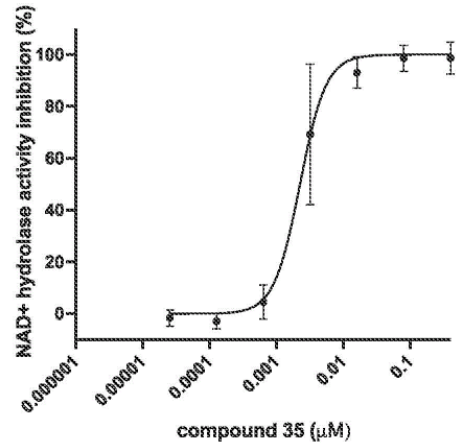

FIG. 1B

21: 2023/05290. 22: 2023/05/15. 43: 2026/09/14
51: H04L
71: NOKIA TECHNOLOGIES OY
72: UMEDA, Hiromasa, VASENKARI, Petri, Juhani, ALI, Amaanat
33: US 31: 63/104,066 32: 2020-10-22
54: CARRIER AGGREGATION CONFIGURATION IN 5G WIRELESS NETWORKS
00: -
A radio access network element includes at least one processor and at least one memory including computer program code. The at least one memory and the computer program code configured to, with the at least one processor, cause the radio access network element to: generate a carrier aggregation configuration for a user equipment based on capability information from the user equipment, the capability information including at least supported maximum channel bandwidth information and supported minimum channel bandwidth information for each band within a band combination; and send the carrier aggregation configuration to the user equipment to configure the user equipment for communication with the radio access network element.

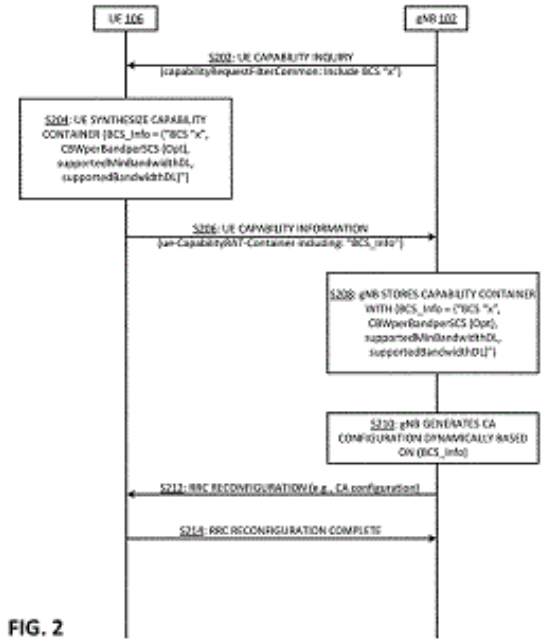

FIG. 2

21: 2023/05341. 22: 2023/05/16. 43: 2026/09/17
51: A01N; A01P
71: Syngenta Crop Protection AG
72: DUVARESCH, Dhiego, QUARANTA, Laura, HAAS, Ulrich Johannes
33: EP(CH) 31: 20211348.6 32: 2020-12-02
54: FUNGICIDAL COMPOSITIONS
00: -
A fungicidal composition comprising a mixture of components (A) and (B), wherein components (A) and (B) are as defined in claim 1, and use of the compositions in agriculture or horticulture for controlling or preventing infestation of plants by phytopathogenic microorganisms, preferably fungi.

21: 2023/05371. 22: 2023/05/17. 43: 2026/09/09
51: H04W
71: TELEFONAKTIEBOLAGET LM ERICSSON (PUBL)
72: RUNE, Johan, MÄÄTTANEN, Helka-Liina, HE, Chao, YAVUZ, Emre
33: US 31: 63/104,094 32: 2020-10-22
54: APERIODIC SYSTEM INFORMATION BROADCAST
00: -
A method performed by a wireless device (110b, 110c) comprises receiving (612) system information (SI) broadcast from a network node, the SI broadcast received according to an aperiodic configuration. In particular embodiments, the aperiodic configuration comprises an initial period followed by a subsequent period, wherein a frequency of the SI broadcast during the initial period is greater than a frequency of the SI broadcast during the subsequent period. The initial period may occur when a satellite takes over coverage of a geographical area in which the wireless device is located, and the subsequent period may occur while the satellite maintains coverage of the geographical area in which the wireless device is located.

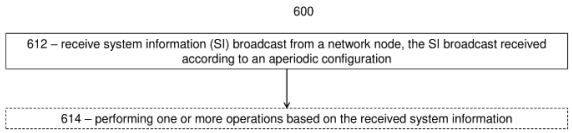

21: 2023/05375. 22: 2023/05/17. 43: 2026/09/09
51: H04B
71: TELEFONAKTIEBOLAGET LM ERICSSON (PUBL)
72: YAVUZ, Emre, RUNE, Johan, MÄÄTTANEN, Helka-Liina, HOFSTRÖM, Björn
33: US 31: 63/104,412 32: 2020-10-22
54: ENHANCEMENTS FOR MEASUREMENT REPORTING IN NON-TERRESTRIAL NETWORKS
00: -
A method by a wireless device includes determining whether one or more conditions for triggering measurements have occurred and performing the one or more measurements based on the occurrence of the one or more conditions. The one or more conditions for triggering measurements is based on at least one of: a timing advance value in a source cell; a distance between the wireless device and a satellite node serving a source cell or a candidate target cell; an expected time for the wireless device to be served in the source cell and/or in the candidate target cell; elevation angle of the satellite node serving the source cell and/or the candidate target cell; a point in time configured by a network node is reached; detection of an identifier associated with a specific cell; and a speed or velocity of the wireless device.

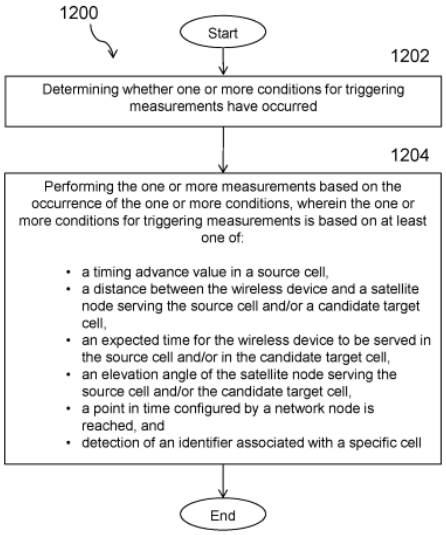

21: 2023/05764. 22: 2023/05/29. 43: 2026/09/17
51: B23K; E21B
71: Sandvik Mining and Construction Tools AB
72: KRAFT, Hanna, FÄLLSTRÖM, Stefan, ANDERSSON, Erik
33: EP(SE) 31: 20215376.3 32: 2020-12-18
54: HARDFACED ROTARY DRILL BIT
00: -
A rotary drill bit comprising at least one rotary cone and at least one leg wherein at least one section of the rotary cone and / or the leg is a substrate that has a hardfaced layer applied thereto characterized in that the substrate dilution of the steel into the hardfaced layer is less than 5% as measured by comparing the ratio between a substrate melted area to a total melted area, wherein the substrate melted area is the transversal cross-sectional area of the rotary drill bit that has been melted by the hardfacing process and wherein the total melted area is the combined transversal cross-sectional area of the hardfacing layer and the substrate melted area.

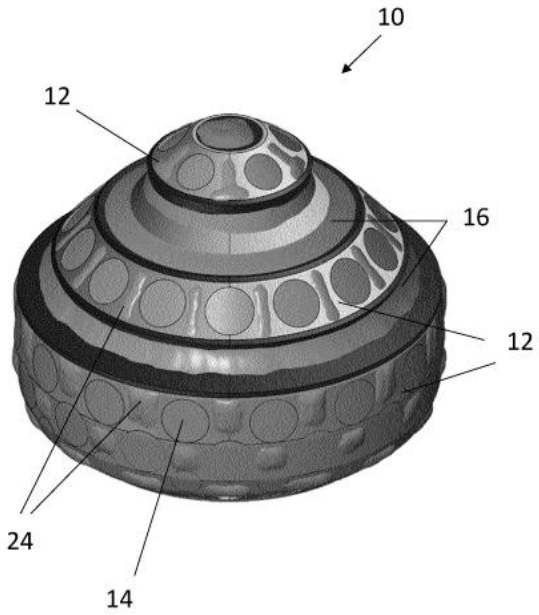

21: 2023/06042. 22: 2023/06/07. 43: 2026/09/16
51: C22B
71: MINING AND PROCESS SOLUTIONS PTY LTD
72: ABDALLA, Elsayed, Abdelrady, Oraby, EKSTEEN, Jacobus, Johannes
33: AU 31: 2020904261 32: 2020-11-18
54: LEACHING OF PRECIOUS AND CHALCOPHILE METALS
00: -
A process for recovery of one or more target metals, selected from precious metals and chalcophile metals as respectively herein defined, from materials containing precious and/or chalcophile metal/s, said process including: (i) leaching the metal containing material with an aqueous solution containing: a "metal liberator" comprising an amino acid; and a "metal retainer" comprising one or more of ammonia, ammonium salts, carboxylic acids, carboxylic acid salts, dicarboxylic acids, dicarboxylic acid salts, hydroxy-carboxylic acids, hydroxy-carboxylic acid salts, ethylene diamine tetra-acetic acid (EDTA) and EDTA salts, to produce a leachate containing the target metal/s; and (ii) extracting the metal from the leachate.

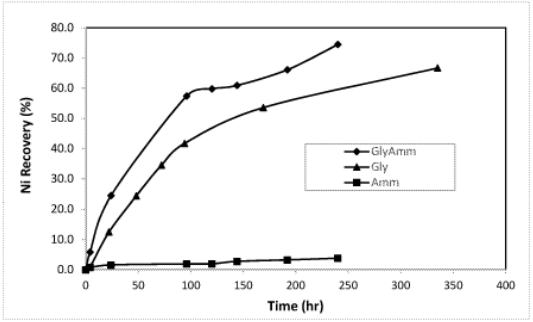

21: 2023/06147. 22: 2023/06/09. 43: 2026/09/11
51: H04N
71: QUALCOMM Incorporated
72: RUSANOVSKYY, Dmytro, KARCZEWICZ, Marta
33: US 31: 63/124,013 32: 2020-12-10
54: LOW COMPLEXITY HISTORY USAGE FOR RICE PARAMETER DERIVATION FOR HIGH BIT-DEPTH VIDEO CODING
00: -
Techniques are described herein for processing video data using a history-based rice parameter derivation. For instance, a process can include obtaining a transform block including a plurality of samples. One or more parameters (e.g., rice parameters) can be determined for the plurality of samples by analyzing a local neighborhood of a current sample of the plurality of samples and determining that a number of neighboring transform coefficients of the current sample is less than a threshold amount. A historic parameter value (e.g., a historic rice parameter value) determined from one or more previously decoded transform blocks can be obtained and, based at least in part on the historic parameter value, a parameter (e.g., a rice parameter) can be determined for the current sample. The current sample can be decoded based on the determined parameter for the current sample.

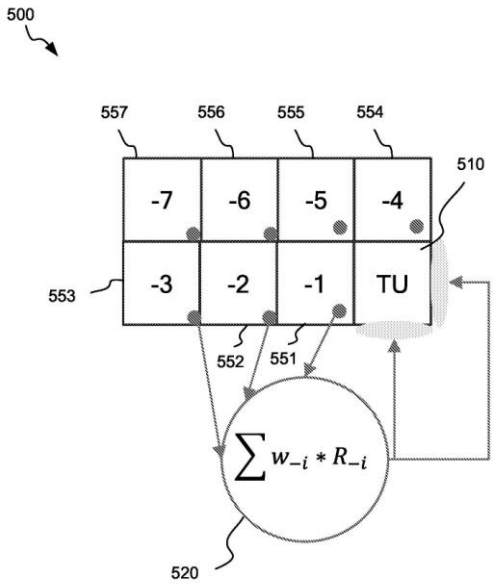

21: 2023/06740. 22: 2023/06/30. 43: 2026/10/13
51: E21B
71: DEVICO AS
72: TOKLE, Viktor, BJÖRGEN, Thomas, LINDHJEM, Rune, FLAAM, John
33: NO 31: 20210042 32: 2021-01-12
54: ORIENTATION SYSTEM FOR DOWNHOLE DEVICE
00: -
Orientation system for downhole device (10), wherein the orientation system comprises an outer magnetic orientation lock assembly (460) arranged in connection with or integrated in the downhole device (10) and an orientation instrument assembly (400) for insertion into the outer magnetic orientation lock assembly (460), and wherein the orientation instrument assembly (400) comprises a sensor assembly (420) rotatably arranged in the orientation instrument assembly (400) and arranged for aligning or orienting in relation to the outer magnetic orientation lock assembly (460).

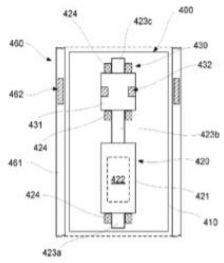

21: 2023/06840. 22: 2023/07/05. 43: 2026/10/21
51: A61B
71: ALPHA TAU MEDICAL LTD.
72: KELSON, Itzhak, ARAZI, Lior, GAT, Amnon, HEGER, Guy
33: US 31: 17/141,251 32: 2021-01-05
33: US 31: 17/497,937 32: 2021-10-10
54: TREATMENT PLANNING FOR ALPHA PARTICLE RADIOTHERAPY
00: -
Apparatus (100) for planning a diffusing alpha-emitter radiation therapy (DaRT) treatment session. The apparatus includes an output interface (110) and a memory (112) configured with a plurality of tables which provide an accumulated measure of radiation over a specific time period, due to one or more types of DaRT radiotherapy sources which emit daughter radionuclides from the source, for a plurality of different distances and angles relative to the DaRT radiotherapy source. In addition, a processor (108) is configured to receive a description of a layout of a plurality of DaRT radiotherapy sources in a tumor, to calculate a radiation dose distribution in the tumor responsive to the layout, using the tables in the memory, and to output feedback for the treatment responsive to the radiation dose distribution, through the output interface.

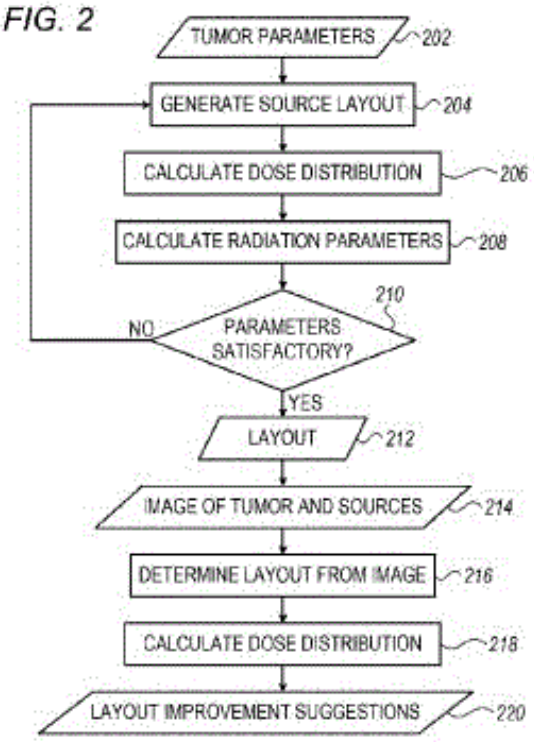

21: 2023/07225. 22: 2023/07/19. 43: 2026/10/13
51: A61K; C12N; A61P
71: JOINT STOCK COMPANY "BIOCAD"
72: MADERA, Dmitriy Aleksandrovich, VESELOVA, Anna Sergeevna, SIUTKIN, Aleksei Sergeevich, GERSHOVICH, Pavel Mikhailovich, MOROZOV Dmitry Valentinovich
33: RU 31: 2021102051 32: 2021-01-29
54: SYNERGISTIC EFFECT OF SMN1 AND MIR-23 A IN TREATING SPINAL MUSCULAR ATROPHY
00: -
The present application relates to the fields of biotechnology, virology, genetics, and molecular biology. More specifically, the present invention relates to an isolated nucleic acid for producing a gene therapy viral product, said isolated nucleic acid comprising a nucleic acid that encodes the SMN1 protein having the amino acid sequence of SEQ ID NO: 1, and a nucleic acid that encodes the microRNA miR-23a, an expression cassette and a vector based thereon, as well as an AAV9-based recombinant virus for expressing the SMN1 gene in target cells, a pharmaceutical composition that includes said recombinant virus, and various uses of the above recombinant virus and the above composition.

21: 2023/07427. 22: 2023/07/26. 43: 2026/10/20
51: A01B; A01C
71: PRECISION PLANTING LLC
72: STRNAD, Michael
33: US 31: 62/567,135 32: 2017-10-02
33: US 31: 62/625,855 32: 2018-02-02
33: US 31: 62/661,783 32: 2018-04-24
54: SYSTEMS AND APPARATUSES FOR SOIL AND SEED MONITORING
00: -
A soil apparatus is drawn through a furrow and reflectance from the furrow is obtained from the soil apparatus, and a height off target is measured between the soil apparatus and the furrow.

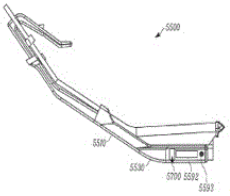

21: 2023/07428. 22: 2023/07/26. 43: 2026/10/20
51: A01B; A01C
71: PRECISION PLANTING LLC
72: STRNAD, Michael, MORGAN, Matthew, KOCH, Dale, M.
33: US 31: 62/567,135 32: 2017-10-02
33: US 31: 62/625,855 32: 2018-02-02
33: US 31: 62/661,783 32: 2018-04-24
54: SYSTEMS AND APPARATUSES FOR SOIL AND SEED MONITORING
00: -
A processing system having: a central processing unit ("CPU") to execute instructions for processing agricultural data; and a communication unit to transmit and receive agricultural data, the CPU is configured to execute instructions to obtain soil temperature from a soil apparatus having at least one sensor to sense soil temperature, to obtain air temperature, to determine a temperature offset based on the soil temperature and the air temperature, to obtain a predicted air temperature, and to determine predicted soil temperature for a future time period based on the temperature offset and the predicted air temperature.

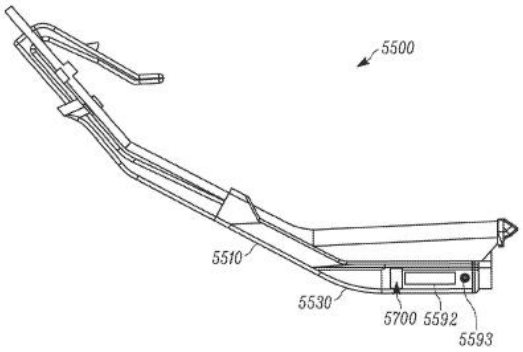

21: 2023/07719. 22: 2023/08/04. 43: 2026/09/03
51: C04B
71: ELEMENT SIX (UK) LIMITED
72: FORD, DAVID, GEEKIE, DOUGLAS
33: GB 31: 2105771.6 32: 2021-04-22
54: METHOD OF MAKING A SHAPED TOOL COMPONENT
00: -
This disclosure relates to a method of making a polycrystalline diamond (PCD) body comprising a PCD table with a height of at least 10 mm.

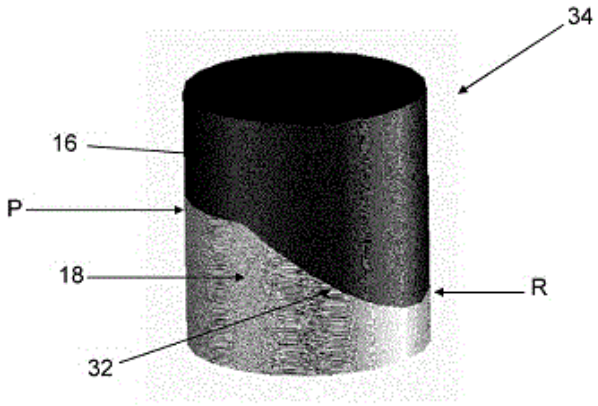

21: 2023/07720. 22: 2023/08/04. 43: 2026/09/03
51: C04B; B23B; B23K; E21B
71: ELEMENT SIX (UK) LIMITED
72: FORD, DAVID, GEEKIE, DOUGLAS
33: GB 31: 2105770.8 32: 2021-04-22
54: METHOD OF MAKING A SHAPED TOOL COMPONENT
00: -
This disclosure relates to a method of making a shaped tool component from a precursor sintered body comprising polycrystalline diamond (PCD). The sintered body has a PCD table joined to a substrate, and the PCD table varies in depth. The resulting shaped tool component thus also has a PCD layer with varying depth. A method of making a shaped tool component comprising polycrystalline diamond (PCD), comprising the steps: h. Adding a diamond feed stock to a refractory cup; i. Adding a p re-shaped cemented carbide body to the refractory cup adjacent the diamond feed stock; j. Compacting the diamond feed stock and cemented carbide body to form a green body; k. Sintering the green body at a temperature between 1400 °C to 2100 °C and at a pressure of at least 7 GPa, for at least 30 seconds to form a sintered PCD precursor body that comprises a PCD table sinter-joined to the cemented carbide substrate at an interface.

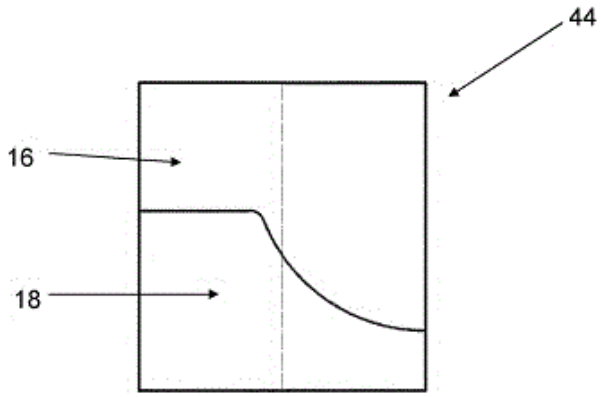

21: 2023/07742. 22: 2023/08/07. 43: 2026/09/03
51: C07D; A01N
71: FMC CORPORATION
72: CHITTABOINA, SRINIVAS, LONG, JEFFREY KEITH, MCMAHON, TRAVIS CHANDLER
33: US 31: 62/727,727 32: 2018-09-06
54: FUNGICIDAL NITROANILINO SUBSTITUTED PYRAZOLES
00: -
Disclosed are compounds of Formula 1, including all geometric and stereoisomers, tautomers, N oxides, and salts thereof, wherein R^1, R^2, R^3, R^4, R^5, R^6, m and n are as defined in the disclosure. Also disclosed are compositions containing the compounds of Formula 1 and methods for controlling plant disease caused by a fungal pathogen comprising applying an effective amount of a compound or a composition of the invention.

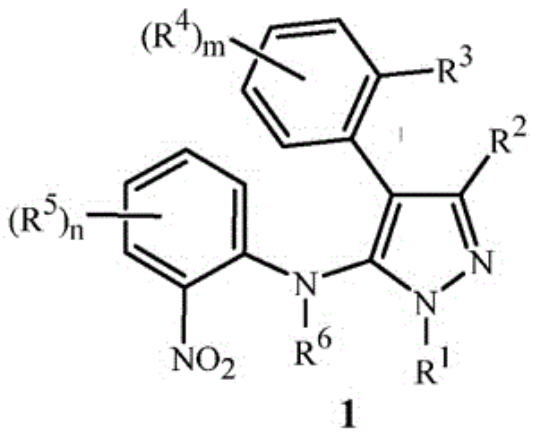

1

21: 2023/07743. 22: 2023/08/07. 43: 2026/09/03
51: F42D; G01V
71: DYNO NOBEL LIMITED
72: CAVANOUGH, GARY LINDSAY, TORRANCE, ALASTAIR COURTENAY
33: AU 31: 2017904086 32: 2017-10-10
54: A METHOD AND SYSTEM FOR WIRELESS MEASUREMENT OF DETONATION OF EXPLOSIVES
00: -
A method of measuring the velocity of transmission of a pressure wave through a ground mass. The method comprises detecting a pressure wave travelling through the ground mass, resulting from detonation of explosives, at a location a known distance from the detonation of the explosives; detecting electromagnetic emissions caused by the detonation of the explosives; and using (i) the interval between the detection of the electromagnetic emissions and the detection of the pressure wave and (ii) the known distance, to calculate the velocity of transmission of the pressure wave through the rock. The detection of the pressure wave may be performed by a pressure sensor. The pressure sensor may comprise a pressure sensor component embedded in epoxy.

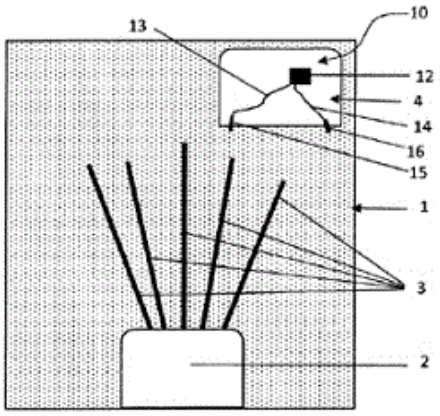

21: 2023/07954. 22: 2023/08/16. 43: 2026/09/09
51: C07D
71: BASF SE
72: KORADIN, Christopher, MCLAUGHLIN, Martin, John, SHINDE, Harish, KADUSKAR, Rahul, GOETZ, Roland, GARIVET, Guillaume, Michel, Jacques
33: EP 31: 21153036.5 32: 2021-01-22
54: METHOD FOR PREPARING AN ENANTIOMERICALLY ENRICHED FORM OF 3-(2-CHLOROTHIAZOL-5-YL)-8-METHYL-7-OXO-6-PHENYL-2,3-DIHYDROTHIAZOLO[3,2-A]PYRIMIDIN-4-IUM-5-OLATE
00: -
The present invention relates to a method for preparing an enantiomerically enriched form of 3-(2-chlorothiazol-5-yl)-8-methyl-7-oxo-6-phenyl-2,3-dihydrothiazolo[3,2-a]pyrimidin-4-ium-5-olate.

21: 2023/07955. 22: 2023/08/16. 43: 2026/09/09
51: C07D
71: BASF SE
72: KORADIN, Christopher, MCLAUGHLIN, Martin, John, GOETZ, Roland, KADUSKAR, Rahul, SHINDE, Harish
33: EP 31: 21153038.1 32: 2021-01-22
54: METHOD FOR PREPARING AN ENANTIOMERICALLY ENRICHED FORM OF 3-(2-CHLOROTHIAZOL-5-YL)-8-METHYL-7-OXO-6-PHENYL-2,3-DIHYDROTHIAZOLO[3,2-A]PYRIMIDIN-4-IUM-5-OLATE
00: -
The present invention relates to a method for preparing an enantiomerically enriched form of 3-(2-chlorothiazol-5-yl)-8-methyl-7-oxo-6-phenyl-2,3-dihydrothiazolo[3,2-a]pyrimidin-4-ium-5-olate.

21: 2023/08143. 22: 2023/08/23. 43: 2026/09/09

51: B01D
71: VEOLIA WATER SOLUTIONS & TECHNOLOGIES SUPPORT
72: LARSSON, Per, SVENSSON, Kjell
33: SE 31: 2150112-7 32: 2021-02-01
54: FILTER UNIT LIFTING SYSTEM
00: -
The invention pertains to a water filter unit (2000) with an integrated lifting system (1000), comprising a water filter(600), at least two lifting pillars (100), at least two sleeves (200) and a slide connector (400), wherein the sleeves (200) are attached at the corners of the water filter (600), the length axis of the sleeves being perpendicular to 5 the mounting surface of the water filter (600), the lifting pillars (100) are arranged to fit inside the sleeves (200), wherein the length axis of the lifting pillars (100) coincide with the length axis of the sleeves (200), such that the sleeves (200) may slide along the lifting pillars (100), thereby forming at least two lifting pillar and sleeve pairs, wherein the at least two pairs are connected to at least one lifting aid for lifting the water filter 10 unit (2000) from an operative position to a raised position, and the slide connector (400) comprises a filter side connector (401) connected to the water filter unit (2000) arranged for connection to an external source thereby forming a fluid connection between the water filter unit (2000) and the external source when the water filter unit (2000) is lowered into the operative position. Furthermore, the invention discloses a lifting 15 system (1000) for a water filter unit (2000).

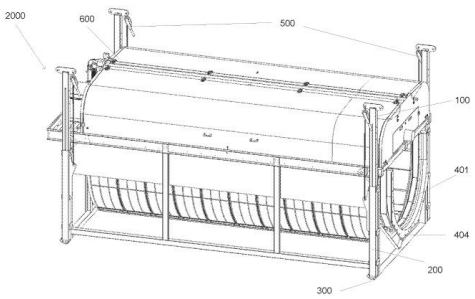

21: 2023/08155. 22: 2023/08/23. 43: 2026/09/08
51: B02C
71: METSO FINLAND OY
72: NIEMINEN, PAAVO
33: EP 31: 21161595.0 32: 2021-03-09
54: A CRUSHING EQUIPMENT AND A METHOD FOR CONTROLLING THE SAME
00: -
The disclosure relates to a method (400) for controlling a crushing equipment (100), wherein the crushing equipment (100) comprises a crusher(102), a feeding arrangement (104) for feeding material to the crusher (102), a secondary equipment (106) arranged downstream from the crusher (102) for sorting out oversized material leaving the crusher (102), and a recirculation loop (108) for recirculating said oversized material to the crusher(102). The method (400) comprising the following steps: stop (S402) feeding new material to the crushing equipment (100) through said feeding equipment(104); recirculating (S404) the oversized material from the secondary equipment (106) to the crusher (102); and decreasing (S406) a crusher setting of the crusher (102).

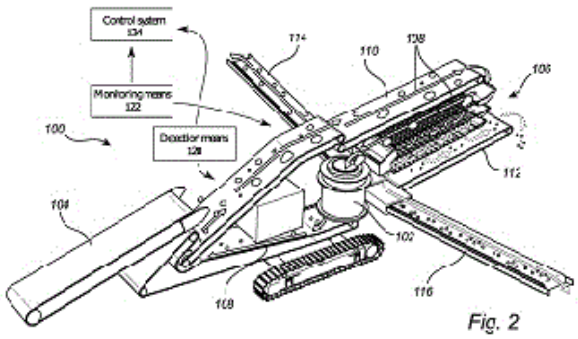

Fig. 2

21: 2023/08266. 22: 2023/08/28. 43: 2026/09/03
51: C07K; A61P; A61K
71: LAVA THERAPEUTICS N.V.
72: ROOVERS, ROBERTUS CORNELIS, VAN DER VLIET, JOHANNES JELLE, LUTJE HULSIK, DAVID, PARREN, PAUL WILLEM HENRI IDA, RUBEN, JURJEN MATTHIJS, MOUSSET, CHARLOTTE MERETTE
33: US 31: 63/274,709 32: 2021-11-02
33: EP 31: 21211114.0 32: 2021-11-29
33: US 31: 63/166,339 32: 2021-03-26
33: EP 31: 21159698.6 32: 2021-02-26
54: ANTIBODIES THAT BIND CD123 AND GAMMA-DELTA T CELL RECEPTORS
00: -
The present invention relates to antibodies capable of binding human CD123 and capable of binding the Vδ2 chain of a human Vγ9Vδ2 T cell receptor. The invention further relates to pharmaceutical compositions comprising the antibodies of the

invention and to uses of the antibodies of the invention for medical treatment.

21: 2023/08367. 22: 2023/08/30. 43: 2026/09/09
51: C08F; C08G; C09D
71: DONALDSON COMPANY, INC.
72: SONTAG, Stephen, K., GOERTZ, Matthew, P., DALLAS, Andrew, J.
33: US 31: 63/145,084 32: 2021-02-03
54: COMPOSITIONS AND ARTICLES INCLUDING PERFLUOROPOLYETHER BOTTLEBRUSH POLYMERS AND METHODS OF MAKING AND USING SAME
00: -
This disclosure describes compositions including a perfluoropolyether (PFPE) bottlebrush polymer, optionally blended with other fluoropolymers. The compositions may be disposed on an article, including, for example, a porous filtration media, to form a fluoropolymer-containing article. This disclosure further describes methods of making fluoropolymer-containing articles and methods of using the fluoropolymer-containing articles.

21: 2023/10238. 22: 2023/11/02. 43: 2026/11/06
51: A61K; A61P
71: REGENERON PHARMACEUTICALS, INC., BAYER HEALTHCARE LLC
72: VITTI, Robert, L., BERLINER, Alyson J, CHU, Karen, ASMUS, Friedrich, DA SILVA LEAL, Sergio Casimiro, EISSING, Thomas, RITTENHOUSE, Kay D.
33: US 31: 63/189,541 32: 2021-05-17
33: US 31: 63/235,398 32: 2021-08-20
33: US 31: 63/297,420 32: 2022-01-07
33: US 31: 63/306,315 32: 2022-02-03
54: EXTENDED, HIGH DOSE VEGF ANTAGONIST REGIMENS FOR TREATMENT OF ANGIOGENIC EYE DISORDERS
00: -
The present invention relates to treatment regimens characterized by high doses of aflibercept (e.g., 8 mg) and extended intervals between doses (e.g., 12 weeks) with improved visual and anatomic outcomes relative to treatment with lower doses such as 2 mg.

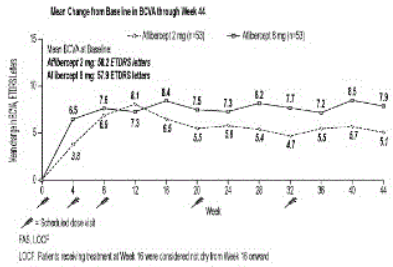

21: 2024/00102. 22: 2024/01/02. 43: 2026/10/09
51: H01F
71: ZTE CORPORATION
72: YANG, Peng, WANG, Hong, ZHOU, Wei, ZHOU, Jingxuan, LI, Runchao, CUI, Yingchun
33: CN 31: 202110766403.7 32: 2021-07-07
54: INDUCTOR
00: -
The embodiments of the present application relate to the technical field of inductors. Provided is an inductor, comprising: a plurality of coils and a magnetic core. The magnetic core comprises: an upper bottom plate and a lower bottom plate, which are arranged in parallel and opposite each other; a plurality of winding columns, which are located between the upper bottom plate and the lower bottom plate, and around which the plurality of coils are wound; and at least one non-winding column, which is arranged between the upper bottom plate and the lower bottom plate, wherein the numbers of turns of coils on at least two of the winding columns are different, and the directions of currents in the coils are opposite; and there are air gaps in the at least two winding columns, around which the coils are wound for different numbers of turns, and the sizes of the air gaps in the winding columns are different. By means of the inductor in the embodiments, an inductor having different proportions of magnetic loss and copper loss can be configured according to different heat dissipation conditions of the environment in which the inductor is located, thereby realizing the differentiated design of an inductor.

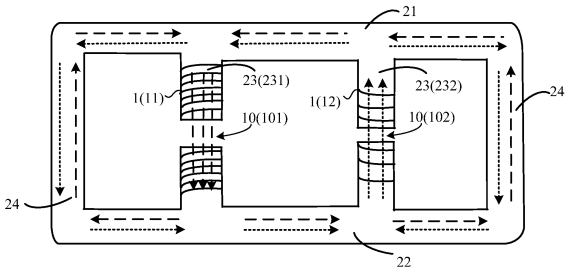

21: 2024/02158. 22: 2024/03/18. 43: 2026/10/21
51: A61K; C07K; C12N
71: JOINT STOCK COMPANY "BIOCAD"
72: STRELKOVA, Anna Nikolaevna, LEGOTSKII, Sergei Aleksandrovich, SHUGAEVA, Tatiana Evgenievna, GERSHOVICH, Pavel Mikhailovich, PROKOFYEV, Alexander Vladimirovich, PEREPELKINA, Mariya Pavlovna, IAKOVLEV, Pavel Andreevich, MOROZOV, Dmitry Valentinovich
33: RU 31: 2021124727 32: 2021-08-20
54: ISOLATED MODIFIED AAV5 CAPSID PROTEIN VP1
00: -
The present application relates to the fields of gene therapy and molecular biology. More specifically, the present invention relates to an isolated modified capsid protein VP1 from adeno-associated virus serotype 5 (AAV5), comprising one or more amino acid substitutions compared to the wild-type AAV5 capsid protein VP1, which substitutions increase the efficiency of transduction, increase the efficiency of packaging of AAV viral genomes with rAAV5-based products, and also increase the efficiency of production (assembly) of a vector based on recombinant adeno-associated virus serotype 5 (rAAV5), to a capsid and a vector based on the above VP1, as well as to uses thereof.

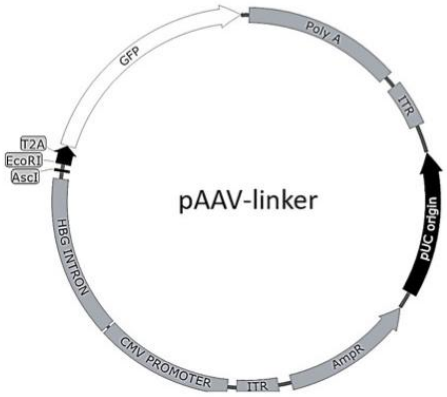

21: 2024/02655. 22: 2024/04/05. 43: 2026/08/25
51: A23D; A23L
71: Société des Produits Nestlé S.A.
72: GARG, Prateeksha, UPADHYAY, Rohit, GULIA, Neelam
33: IN 31: 202111041602 32: 2021-09-15
54: PROCESS FOR AN INSTANT NON-FRIED NOODLE
00: -
The present invention relates to a process for the production of an instant non-fried noodle. In particular the invention relates to a process for the production of an instant non-friednoodle comprising a) a lipid activation, wherein the lipid is activated by heating the lipid to a temperature between 100 to 180°C and applying an aeration into the lipid having an air flow rate between 0.5 to 8 L/h/g for 2 to 10h; b) mixing the activated lipid with flour and other dry ingredients with Kansui salts to form an uniform dough; c) sheeting and slitting the dough to obtain noodle strands; d) steaming the noodle strands; e) optionally seasoning; f) cutting and folding the noodle strands; g) drying and cooling,

21: 2024/03204. 22: 2024/04/25. 43: 2026/08/25
51: E21B
71: Sandvik Mining and Construction Oy
72: MAKKONEN, Eero, SILLANPÄÄ, Vesa, LUUTIKIVI, Jukka
33: EP(FI) 31: 23172251.3 32: 2023-05-09
54: GRIPPER, ROCK DRILLING UNIT AND METHOD
00: -
A gripper, a rock drilling unit and a method of handling drilling tools. The gripper (9) comprises a hydraulic cylin-der (10) and at least one gripping jaw (12) movable by means of the hydraulic cylinder towards and away from the drill-ing tool (7). The

hydraulic cylinder com-prises at least one adjusting piston (16) having a first operating position with a first fixed stoppage and a second operat-ing position with a fixed second stop-page. The adjusting piston limits move-ment length of a piston rod (11) at one of the first and second operating posi-tions to provide the gripping jaw an in-termediate position between extreme move-ment positions of the gripping jaw.

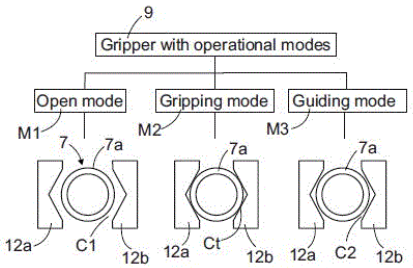

FIG. 3

21: 2024/03329. 22: 2024/04/29. 43: 2026/08/25
51: A01N; A01P
71: Syngenta Crop Protection AG
72: WILKINS, Lewis Charles, COUGHLIN, Andrew James, STOCKMAL, Kelli Anne, DE HEER, Martine Ingrid, RYMARUK, Matthew Joseph, KYNASTON, Emily Louise, WALLER, Catherine Paula
33: US 31: 63/283,644 32: 2021-11-29
54: METHOD OF PREPARING BIODEGRADABLE MICROCAPSULES BASED ON GELATINE
00: -
A method of encapsulating an agrochemical in a biodegradable capsule comprising the complex coacervation of gelatin and a carboxylated polysaccharide.

21: 2024/03375. 22: 2024/04/30. 43: 2026/08/25
51: A01N; C05D; C09K
71: Tessenderlo Group NV
72: MUTEAU, Régis, DE BAUW, Pieterjan, TOMASI, Isabella
33: EP(BE) 31: 21205868.9 32: 2021-11-02
54: AGRICULTURAL METHODS AND USES FOR THE MODULATION OF REDOX POTENTIAL IN SOIL AND/OR PLANT TISSUE
00: -
The present invention relates to methods and uses for the modulation of the redox potential of soil and/or plant tissue comprising the application of sulfur fertilizers selected from the group consisting of thiosulfates, polysulfides, (bi)sulfides, (bi)sulfites, metabisulfites, dithionites, elemental sulfur and combinations thereof.

21: 2024/03932. 22: 2024/05/21. 43: 2026/10/13
51: C12C; G05B
71: HEINEKEN SUPPLY CHAIN B.V.
72: DEELEN, Willem Gerrit, MAAGD, Michiel Herman, BING, Xiaoyun, MARIN RAMIREZ, Ramon, PAVLOVIC, David
33: EP 31: 21210311.3 32: 2021-11-24
54: METHOD AND DEVICE FOR PROVIDING BEVERAGE MANUFACTURING ANALYSIS
00: -
Quality of a natural product, like beer, bread, wine and the like, is determined by many parameters. Process parameters that may be changed or not, external parameters and parameters of ingredients. With complex processes and many process steps, it is very difficult to relate parameters to quality - if possible at all. Data on process control, values of product and process related parameters and values that may be interpreted as indicative of quality, substances found in the product - either final or intermediate - and quantities thereof, other parameters or combinations thereof. Between values obtained for the parameters, relations may be determined that may be used for process optimisation. This may be executed for one or more process steps and for one or more parameters in the process and one or more quality parameters.

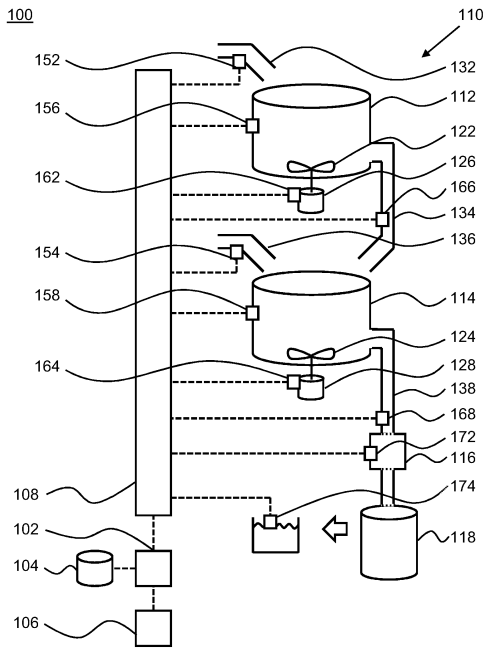

21: 2024/04021. 22: 2024/05/23. 43: 2024/12/13
51: B27L
71: GAP INVENTIONS (PTY) LTD
72: JACO NEL
54: LOG SUPPORT
00: -
The invention relates to a log support and more particularly to an apparatus for supporting a log to be split by a user

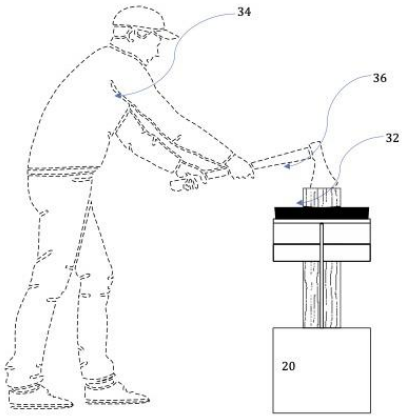

21: 2024/04034. 22: 2024/05/23. 43: 2026/09/09
51: B01J; B05C
71: Cataler Corporation
72: OGA, Koji, OKADA, Hiroki, TAKAHASHI, Masaki
33: JP 31: 2021-190369 32: 2021-11-24

54: METHOD FOR MANUFACTURING EXHAUST GAS PURIFICATION CATALYST DEVICE
00: -
The present invention provides a method for manufacturing an exhaust gas purification catalyst device, that includes: (A) holding a honeycomb base material, which has a plurality of cell flow paths divided by cell walls, so that the flow path direction of the cell flow paths is vertical, and placing a coating liquid for catalyst coating layer formation on the upper end surface of the base material; (B) suctioning the post-step (A) base material from the lower end surface by a decompression pump to apply the coating liquid on the cell walls and/or in the cell walls of the base material; and, (C) transferring the post-step (A) base material to the next step, wherein step (B) and step (C) are performed simultaneously by a transfer/suction device 100.

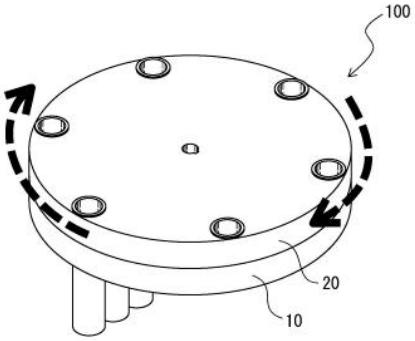

21: 2024/04309. 22: 2024/05/31. 43: 2026/10/20
51: A61K; C07D; A61P
71: BALA THERAPEUTICS, INC.
72: ABAGYAN, Ruben, PARCHINSKY, Vladislav Zenonovich, SAVCHUK, Nikolay, IVACHTCHENKO, Alexandre Vasilievich, KHVAT, Alexander
33: US 31: 63/287,716 32: 2021-12-09
33: US 31: 63/306,399 32: 2022-02-03
33: US 31: 63/397,322 32: 2022-08-11
54: INHIBITORS OF MENIN-MLL INTERACTION
00: -
The present disclosure is directed to the compounds of Formula (I) – inhibitors of the interaction of menin and MLL. The inhibitors described herein can be useful in the treatment of diseases or disorders associated with menin-MLL interaction, such as cancer. In particular, the disclosure is concerned with compounds and pharmaceutical compositions inhibiting/blocking menin-MLL interaction, methods of treating diseases or disorders associated with

menin-MLL interaction, and methods of synthesizing these compounds.

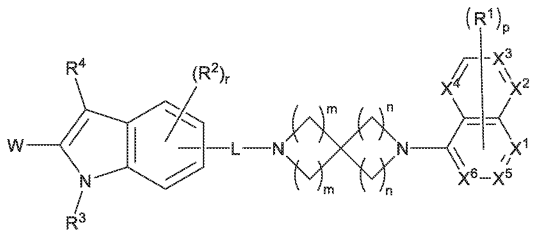

(I)

21: 2024/04892. 22: 2024/06/21. 43: 2026/09/23
51: B01J
71: SABIC GLOBAL TECHNOLOGIES B.V.
72: KOROBKOV, Ilia, AL-NEZARI, Abdulaziz, AL-DAJANE, Maher Matar, LICCIULLI, Sebastiano, AZAM, Shahid
33: EP 31: 21217291.0 32: 2021-12-23
54: CATALYST COMPOSITION FOR OLIGOMERIZATION REACTION
00: -
The disclosure provides a catalyst reaction mixture including a ligand having a backbone with at least one phosphorus atom and at least one nitrogen atom, a chromium compound, and a solvent mixture including decalin and at least one additional solvent, wherein the solvent mixture comprises decalin in an amount of less than 20 wt. % and, optionally, perhydroindane in an amount of 50 wt. % or less, based on the total weight of the solvent mixture. A method of forming a linear alpha olefin through ethylene oligomerization is also provided, the method including contacting ethylene gas with a reaction mixture in a reactor, the reaction mixture including the catalyst reaction mixture of the disclosure; and withdrawing a product stream including at least one linear alpha olefin, such as 1 -butene, 1 -hexene, or 1 -octene, from the reactor.

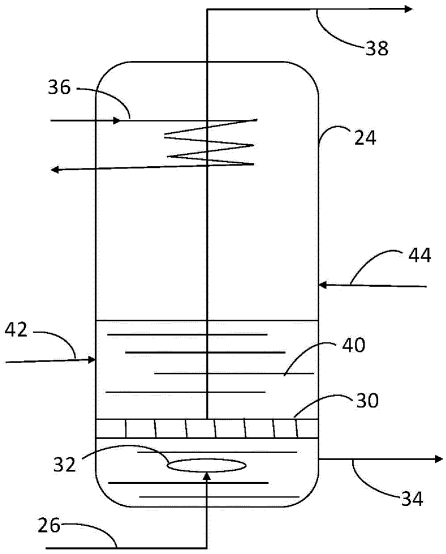

21: 2024/05019. 22: 2024/06/26. 43: 2026/10/12
51: A01K; H03K; H05C
71: HALTER USA INC
72: WOODHOUSE, Callum, NIEUWENHUIZEN, Peter
33: AU 31: 2021904052 32: 2021-12-14
54: APPARATUS TO GUIDE ANIMALS AND METHOD THEREFOR
00: -
The present invention relates to moving animals to a new location. More particularly but not exclusively, it relates a wearable device to send a stimulus to guide an animal from an initial location to a target location, where the journey between the two locations comprises a path that the animal may be hesitant to transit, and adjusting the stimulus accordingly.

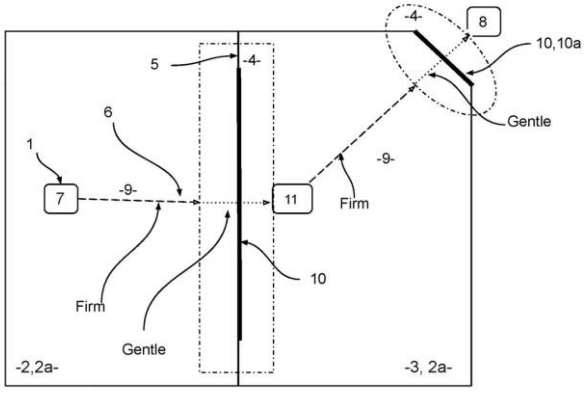

21: 2024/05094. 22: 2024/06/28. 43: 2026/10/12
51: B07C; G01N

71: INSORT GMBH
72: STAUBMANN, Philipp, SCHEIBELMASSER, Anton
33: AT 31: A 50072/2022 32: 2022-02-07
54: METHOD AND DEVICE FOR DETERMINING WHETHER AN OILSEED, A NUT, IN PARTICULAR A HAZELNUT, OR A SEED IS RANCID
00: -
The invention relates to a method for determining whether an oilseed, a nut, in particular a hazelnut (2), or a seed is rancid, involving irradiating a sample, detecting an absorption or reflection spectrum, determining the content of at least one fatty acid decomposition product in the sample, and ascertaining a degree of rancidity using the content of the at least one fatty acid decomposition product in the sample. The method additionally involves irradiating an oilseed, a nut, in particular a hazelnut (2), or a seed, projecting reflected and/or transmitted light onto a detection photosensor (4'), detecting absorption or reflection spectra in a wavelength range of 300-2500 nm using the detection photosensor (4'), said detection photosensor having a plurality of pixels, and assigning a degree of rancidity to each pixel of the detection photosensor (4').

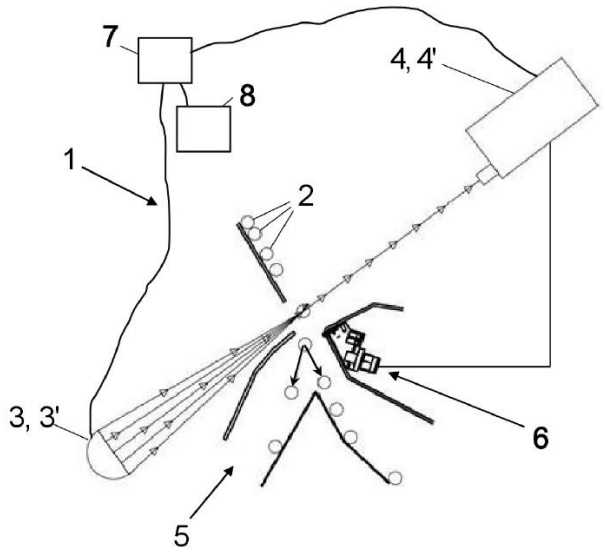

21: 2024/05274. 22: 2024/07/05. 43: 2026/10/12
51: C10J
71: CHANGZHENG ENGINEERING CO., LIMITED
72: JIANG, Congbin, DING, Jianping, GUO, Jinjun, LI, Zhenxiang, LI, Xiaofei, LIANG, Junhui, LONG, Xiaodong, YUAN, Bing
33: CN 31: 202210202390.5 32: 2022-03-03
33: CN 31: 202220452381.7 32: 2022-03-03
54: GASIFIER HAVING LIQUID LEVEL SELF-BALANCING FUNCTION
00: -
Provided in the present disclosure is a gasifier having a liquid level self-balancing function. The gasifier comprises a furnace body, a spraying assembly and a plurality of groups of washing assemblies, wherein the spraying assembly and the plurality of groups of washing assemblies are sequentially arranged on a chilling section of the furnace body from top to bottom; the spraying assembly comprises transverse spraying pipes and longitudinal spraying pipes, which are in communication with each other, the transverse spraying pipes penetrating a side wall of the furnace body, and pipe openings of the longitudinal spraying pipes facing downwards; each washing assembly comprises a transverse washing pipe and a longitudinal washing pipe, which are in communication with each other, the transverse washing pipes penetrating the side wall of the furnace body, and pipe openings of the longitudinal washing pipes being upwards; the pipe openings of the longitudinal washing pipes and cooling liquid in the chilling section are at the same level, and the cooling liquid is in an overflow state; and the longitudinal washing pipes coaxial with the longitudinal spraying pipes are correspondingly arranged below the longitudinal washing pipes. In the gasifier of the present disclosure, by means of combination of the spraying assembly and the plurality of groups of washing assemblies, the liquid level self-balancing requirement in the chilling section is met in such manners of water overflowing and removing dust by means of washing, the effects of efficient cooling and fly ash wetting in crude synthesis gas are achieved, and the burden of downstream equipment is reduced.

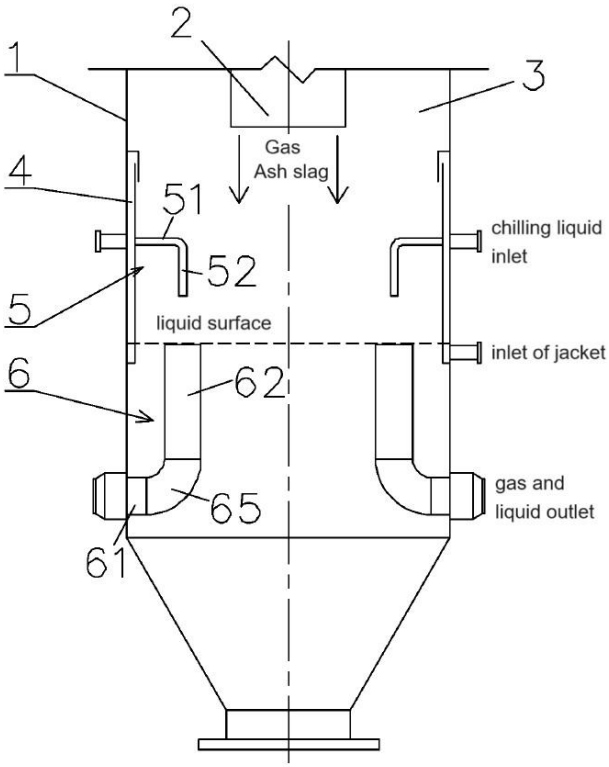

21: 2024/05331. 22: 2024/07/09. 43: 2026/10/22
51: A61K; C07D; A61P
71: NOVARTIS AG
72: ADAMS, Christopher M., CZABANIUK, Lara C., FLOHR, Stefanie, GESSIER, François, HEDIGER, Michael Christoph, HURTH, Konstanze, LABBE-GIGUERE, Nancy, LIMA, Fabio, PATEL, Tajesh, SENDZIK, Martin, SIMIC, Oliver, VITREY, Angela, VULPETTI, Anna
33: US 31: 63/302,246 32: 2022-01-24
54: SPIROCYCLIC PIPERIDINYL DERIVATIVES AS COMPLEMENT FACTOR B INHIBITORS AND USES THEREOF
00: -
Provided herein are compounds of formula (I) and pharmaceutical compositions thereof useful for treating diseases or disorders mediated by the complement factor B. (I).

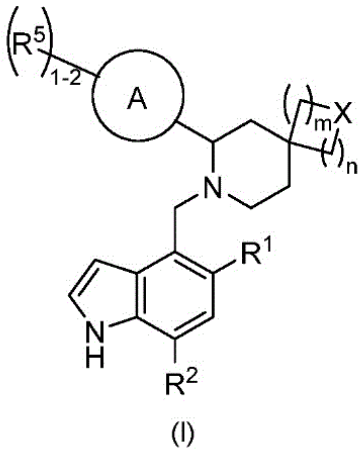

(I)

21: 2024/05573. 22: 2024/07/17. 43: 2026/10/22
51: C12G; C12N
71: DANSTAR FERMENT AG
72: ORTIZ-JULIEN, Anne, FERREIRA, David
33: EP 31: 22305593.0 32: 2022-04-21
54: YEAST-BASED NUTRIENT AND USES THEREOF
00: -
The present disclosure provides a yeast-based nutrients rich in sterols to prevent or reduce slow and/or sluggish alcoholic fermentation and maintaining or increase the fermenting capacity of Active Dry Yeast (ADY) or Instant Dry Yeast (IDY) during alcoholic fermentation. The present disclosure also provides a method of maintaining or increasing a fermenting capacity of Active Dry Yeast (ADY) or Instant Dry Yeast (IDY) during alcoholic fermentation.

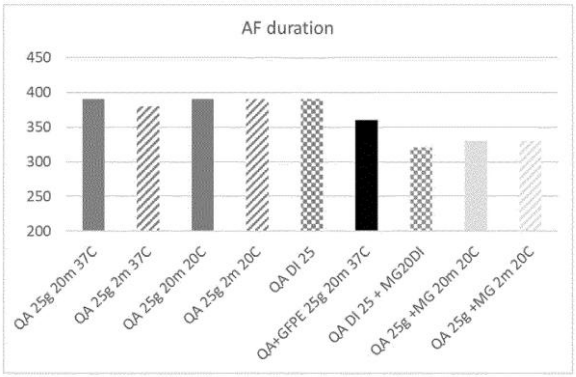

21: 2024/05645. 22: 2024/07/19. 43: 2026/10/22
51: A61K; A61P
71: PRIOTHERA SAS
72: DERTSCHNIG, Simone, BOUSSO, Philippe, BOULCH, Morgane, OEHEN, Stephan

33: EP 31: 22305171.5 32: 2022-02-16
33: EP 31: 22305781.1 32: 2022-05-27
54: METHODS OF TREATMENT WITH CAR CELLS IN COMBINATION WITH S1P RECEPTOR MODULATORS
00: -
The present invention relates to CAR cell composition for use in treating hematological malignancies in a subject in need thereof, wherein said CAR cell is an immune cell which expresses a chimeric antigen receptor molecule that binds a cancer-related antigen, and wherein a therapeutically effective amount of CAR cell composition is administered in combination with a therapeutically effective amount of an S1P receptor modulator or a pharmaceutically acceptable salt thereof or a phosphate derivative thereof.

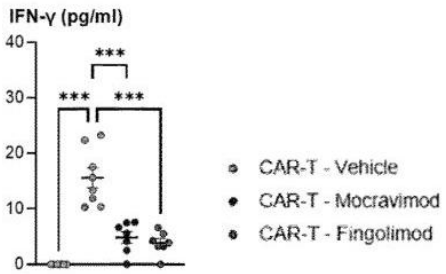

21: 2024/05849. 22: 2024/07/29. 43: 2026/10/12
51: A61K; A61Q
71: SIGRID THERAPEUTICS AB
72: BAEK, Jeanha, BENGTSSON, Tore, IOANNIDOU, Anna, JOHNSTON, Eric, ROBERT-NICOUD, Ghislaine Monique Nicole
33: GB 31: 2201484.9 32: 2022-02-04
54: ORAL CARE COMPOSITION COMPRISING POROUS SILICA PARTICLES
00: -
There is provided herein an oral care composition comprising porous silica particles having pores in the mesoporous range, wherein the average pore size of the pores in the mesoporous range is from about 7.0 to about 25.0 nm.

21: 2024/05997. 22: 2024/08/02. 43: 2026/09/03
51: C01B; B01D; C07C; C10G; C10K
71: JOHNSON MATTHEY DAVY TECHNOLOGIES LIMITED
72: ALLAN, STUART WILLIAM, COE, ANDREW JAMES, COOK, AMELIA LORNA SOLVEIG, JIANG, CUIJIE, LLORENS NAVARRO, RAUL, NIJEMEISLAND, MICHIEL, SUNDERLAND, JON-PIERRE
33: GB 31: 2204767.4 32: 2022-04-01
54: A METHOD OF FORMING A SYNGAS FOR PRODUCING LIQUID HYDROCARBONS
00: -
A method of forming a syngas for producing liquid hydrocarbons, the method comprising: providing a feed gas comprising carbon dioxide, hydrogen and compounds of sulfur; providing a carbon-monoxide-enriched feed gas by passing the feed gas to a reverse-water- gas-shift reaction chamber to convert a portion of the carbon dioxide and a portion of the hydrogen to carbon monoxide and water, and to convert at least a portion of the compounds of sulfur to hydrogen sulfide; passing the carbon-monoxide-enriched feed gas to a carbon- dioxide-removal unit to provide the syngas and a carbon-dioxide-enriched stream, the carbon-dioxide-enriched stream comprising carbon dioxide and hydrogen sulfide; providing a purified carbon-dioxide stream by passing the carbon-dioxide-enriched stream to a hydrogen-sulfide-removal unit to remove hydrogen sulfide from the carbon-dioxide-enriched stream; and recycling the purified carbon-dioxide stream into the feed gas.

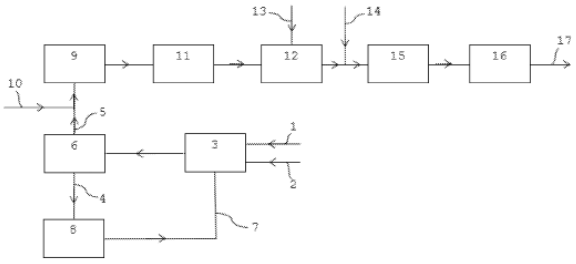

21: 2024/06159. 22: 2024/08/12. 43: 2026/09/23
51: F24S
71: SUNDRACO POWER INC.
72: DE CHAZAL, Robert
33: US 31: 63/299,770 32: 2022-01-14
33: US 31: 63/408,298 32: 2022-09-20
54: SOLAR ENERGY COLLECTOR
00: -
A solar energy collection system includes (a) an elongate solar collector unit with dual opposed elongate, hemi-parabolic mirrors each having a linear focus line; (b) an elongate receiver having two linear gaps, each of which lies along a focus lines of

one mirror, and including a heat pipe and a heat transfer structure to heat a heat transfer fluid within the heat pipe with solar energy; and (c) a subsystem configured to move the heat transfer fluid through the receiver.

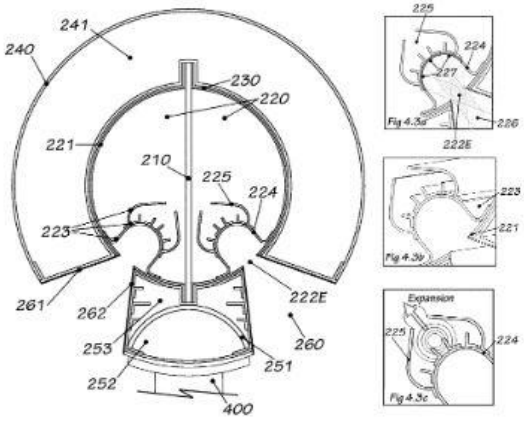

21: 2024/06285. 22: 2024/08/15. 43: 2026/09/03
51: A61K; A61P; C07K; C12N
71: KANSAS STATE UNIVERSITY RESEARCH FOUNDATION
72: GANTA, ROMAN R
33: US 31: 63/268,473 32: 2022-02-24
54: ANAPLASMA VACCINES AND METHODS OF USE THEREOF
00: -
The present disclosure provides an immunogenic composition against A. marginale wherein the composition generally includes a disrupted or deleted phage head-to-tail connector protein (phtcp) gene. Such compositions are useful in reducing the incidence, severity, transmission, and duration of infection with A. marginale following administering at least one dose of the immunogenic composition to an animal in need thereof.

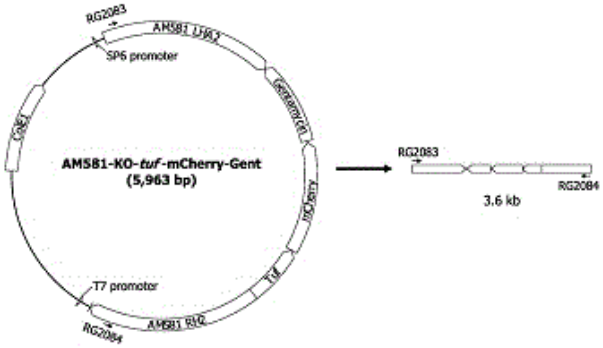

21: 2024/06301. 22: 2024/08/16. 43: 2026/09/16
51: B65D
71: REYNOLDS PRESTO PRODUCTS INC.
72: DERUE, Nicholas, A., THOMPSON, Gregg, WEHRLE, Richard
33: US 31: 17/463,990 32: 2021-09-01
54: CHILD RESISTANT ZIPPER CLOSURE, SLIDER, RECLOSEABLE POUCH & METHODS
00: -
A zipper closure includes mating first and second profiles, which releasably interlock along a parting line along the side. A slider can be used to open and close the slider. The slider has a channel, which receives an ear on the second profile, and the ear rides through the ear-receiving channel to align engaging structure of the first and second profiles and roll them together into interlocked engagement. The slider has a splitter on a deflectable tab, which can be pressed into a notch on the zipper closure to initially separate the mating profiles, while moving the slider to direct the ear into an ear- receiving channel in the slider and deflect the ear to a side and pry open and separate the profiles.

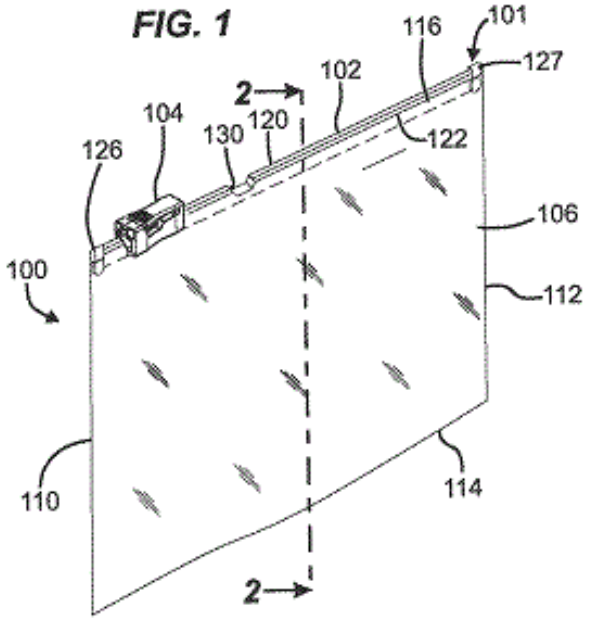

21: 2024/06331. 22: 2024/08/16. 43: 2026/09/07
51: F42B; F42C; F42D
71: DAVEY BICKFORD
72: GUYON, FRANCK
33: FR 31: FR2202147 32: 2022-03-11

54: SINGLE-CAPACITOR ELECTRONIC DETONATOR AND SYSTEM FOR FIRING SUCH SINGLE-CAPACITOR ELECTRONIC DETONATORS

00: -

The invention relates to a single-capacitor electronic detonator (10) comprising an explosive-initiating means (11), electronic control means (16) and a single energy storage capacitor (15) for supplying the electronic control means (16) and the explosive-initiating means (11) with power when firing the single-capacitor electronic detonator (10). It further comprises means (18) for clipping the voltage across the terminals of the single energy storage capacitor (14) to a value lower than a non-firing voltage value (Ua) of the explosive-initiating means (11), and voltage-regulating means (19) connected to means (13) for connecting to a power source (12), which means are suitable for limiting the output voltage to a value lower than a non-firing voltage value (Ua) of the explosive-initiating means (11). The invention also relates to the use thereof in a firing system to improve safety when using single-capacitor electronic detonators (10).

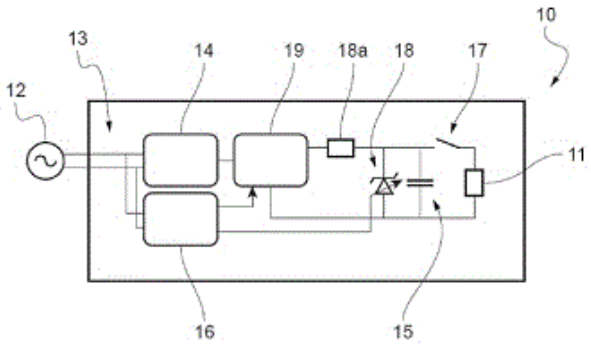

21: 2024/06333. 22: 2024/08/16. 43: 2026/09/03
51: C07D; C07C; A61K; A61P
71: TECHFIELDS INC.
72: YU, CHONGXI, XU, LINA
33: CN 31: PCT/CN2022/072269 32: 2022-01-17

54: TREATMENT OF SIGNS, SYMPTOMS AND/OR COMPLICATIONS OF VIRAL, BACTERIAL, PROTOZOAL, AND/OR FUNGAL INFECTIONS BY HIGH PENETRATION PRODRUGS

00: -

High penetration prodrugs (HPPs), pharmaceutical compositions and methods thereof, for treatment of signs, symptoms and/or complications of viral, bacterial, protozoal, and/or fungal infections are disclosed. The HPPs are capable of penetrating one or more biological barriers to reach areas that their corresponding parent drugs may not be able to reach with sufficient quantities. While the HPPs can be administered to a subject through various administration routes, e.g., local delivery or systemic administration, transdermal or topical administration of them provides various additional advantages over use of the parent drugs.

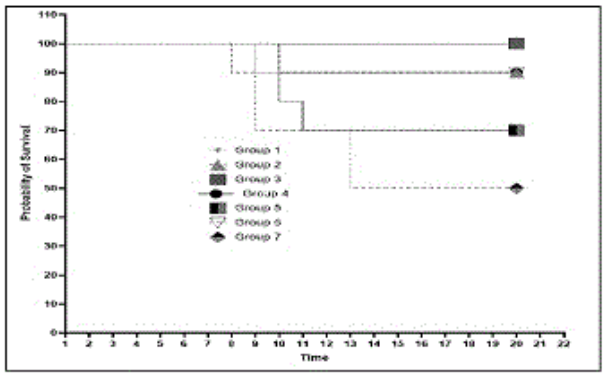

21: 2024/06334. 22: 2024/08/16. 43: 2026/09/03
51: A61K; C07C; A61P

71: TECHFIELDS INC.
72: YU, CHONGXI, XU, LINA
33: CN 31: PCT/CN2022/072270 32: 2022-01-17
54: PREVENTION OR TREATMENT OF CARDIOVASCULAR DISEASES OF HIGH PENETRATION PRODRUGS OF ASPIRIN AND OTHER NSAIDS
00: -
It provides 2- (diethylamino) ethyl acetoxybenzoate hydrochloride, other high penetration prodrugs of aspirin and other NSAIDs, and pharmaceutically acceptable salts thereof for use and methods thereof in the prevention or treatment of cardiovascular diseases and conditions. Pharmaceutical compositions, treatment kits and devices comprising 2- (diethylamino) ethyl acetoxybenzoate hydrochloride, other high penetration prodrugs of aspirin and other NSAIDs, and pharmaceutically acceptable salts thereof, as well as dosage forms, dosages, and methods of use thereof through topical administration are disclosed.

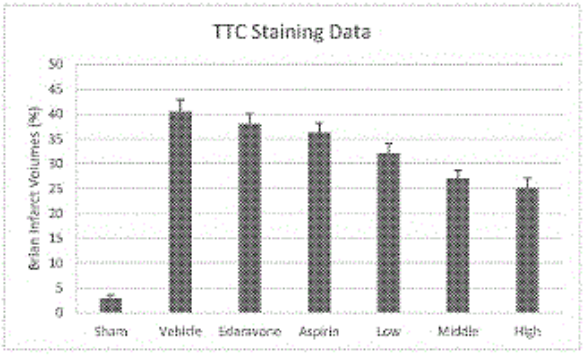

21: 2024/06587. 22: 2024/08/27. 43: 2026/09/03
51: C10J
71: SIERRA ENERGY CORPORATION
72: VAN WALSEM, JOHAN, DODD, DANIEL, VERGNANI, PAUL
33: US 31: 63/313,796 32: 2022-02-25
54: FIXED BED GASIFIER
00: -
Provided herein is a gasifier, preferably a fixed bed, slagging, updraft oxygen gasification reactor or gasifier with features to facilitate gasification of heterogeneous waste streams producing a syngas with minimal level of condensable tars whilst simultaneously removing molten slag from the bottom of the bed via a cooled slag collector ("CSC"); syngas and other compositions produced therefrom; and processes including it.

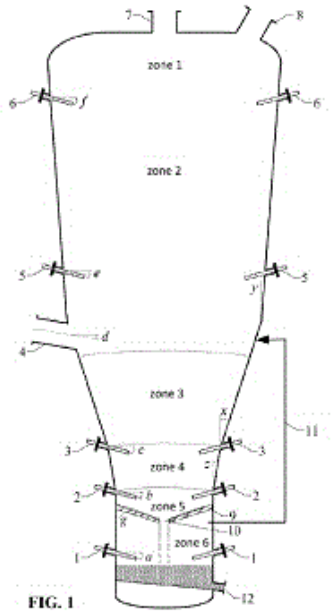

FIG. 1

21: 2024/06588. 22: 2024/08/27. 43: 2026/09/03
51: C21C; C10J; F23G
71: SIERRA ENERGY CORPORATION
72: VERGNANI, PAUL, DODD, DANIEL
33: US 31: 63/314,148 32: 2022-02-25
54: LANCES FOR INJECTING REACTANTS INTO GASIFIERS
00: -
A lance for injecting reactants into a gasification zone of a gasifier includes a face, an outer shell, and a primary cooling circuit comprising an inlet nozzle and outlet nozzle, wherein the lance is an actively cooled lance.

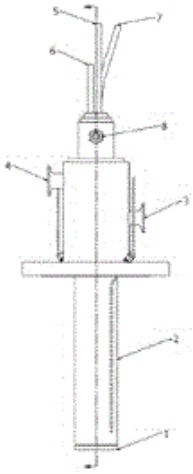

21: 2024/06589. 22: 2024/08/27. 43: 2026/09/03
51: C02F; C10J

71: SIERRA ENERGY CORPORATION
72: VAN WALSEM, JOHAN, VALSAN, VINEETH, VERGNANI, PAUL, LAM, SABIAS, CORK, FRED
33: US 31: 63/313,800 32: 2022-02-25
54: SYNGAS CLEANING AND SOOT RECOVERY
00: -
A method of removing impurities from black water associated with a gasifier includes adding a flocculant to the black water to create a black water and flocculant mixture, settling the black water and flocculant mixture in a gravity settling device to separate the black water and flocculant mixture into clarified water, a froth phase, and a heavy phase, the froth phase comprising soot, water, and air or gas, the heavy phase comprising soot and water, drawing off the clarified water from the settled black water and flocculant mixture, collecting a dilute slurry comprising the froth phase and the heavy phase, and phase separating the dilute slurry in a high-speed centrifuge to provide additional clarified water and a concentrated slurry, wherein the black water is obtained from wet gas scrubbing of syngas.

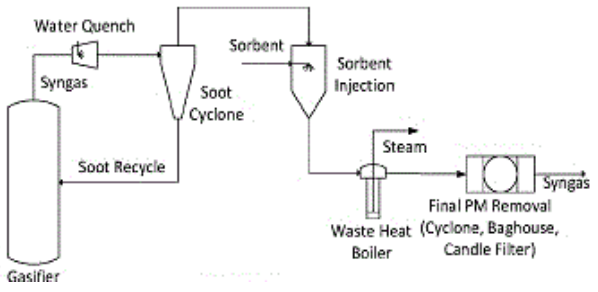

21: 2024/07698. 22: 2024/10/10. 43: 2026/09/22
51: F16K
71: DAVIS & DEALE IRRIGATION (PROPRIETARY) LIMITED
72: DAVIS, BEVAN JOHN
33: ZA 31: 2023/09886 32: 2023-10-24
54: VALVE
00: -
This invention relates to a valve, and more particularly but not exclusively to a plug valve suitable for use in water distribution applications. The invention also relates to a sealing arrangement for use in a valve. The valve includes a valve body having an inlet, an outlet and a flow passage extending between the inlet and the outlet. The valve also includes a closure element that is locatable inside the valve body, the closure element being rotatable relative to the valve body between a closed position in which the closure element obstructs the flow passage, and an open position in which the closure element allows for fluid to flow through the flow passage. A seal is provided between the closure element and a seating surface of the valve body, with the seal being located on a side of the closure element which faces the inlet when the closure element is in the closed position.

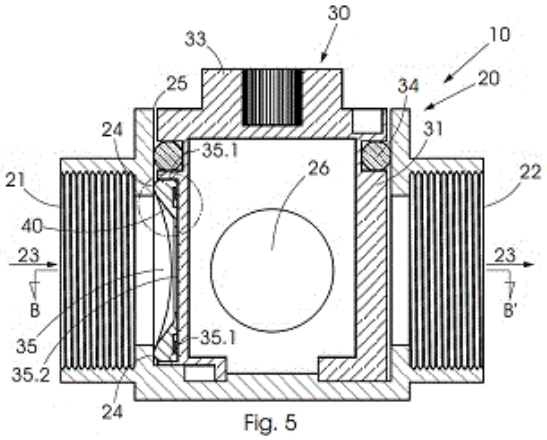

Fig. 5

21: 2024/07755. 22: 2024/10/14. 43: 2026/09/01
51: C02F; C08B; C08L
71: CycloPure, Inc.
72: BARIN, Gokhan, SPRUELL, Jason M., BROWN, Moira, LI, Shan
33: US 31: 62/805,505 32: 2019-02-14
54: CHARGE-BEARING CYCLODEXTRIN POLYMERIC MATERIALS AND METHODS OF MAKING AND USING SAME
00: -
The present disclosure relates to charge-bearing polymeric materials and methods of their use for purifying fluid samples from micropollutants, such as anionic micropollutants.

% Removal in 0.5 h	Crosslinker	GenX	PFBA	PFHxA	PFHpA	PFOA	PFUA	PFDA	PFUnA	PFDoA	PFBS	PFHxS	PFOS
SL-0420-3	4,4'-MDI	0%	6%	18%	19%	29%	41%	63%	80%	83%	16%	29%	62%
SL-0420-4	4,4'-MDI	-8%	0%	1%	3%	0%	2%	1%	-3%	-16%	-9%	-5%	-10%
SL-1-010A	2,4-TDI	4%	8%	21%	33%	70%	89%	96%	97%	90%	22%	63%	96%
SL-1-010B	2,4-TDI	7%	9%	12%	14%	9%	15%	18%	22%	26%	7%	8%	3%
MB-1-036	TRI+CC	74%	68%	80%	82%	83%	85%	89%	90%	91%	86%	89%	91%
MB-1-037	TRI+CC	94%	101%	95%	96%	96%	95%	94%	91%	88%	96%	96%	92%

% Removal in 48 h	Crosslinker	GenX	PFBA	PFHxA	PFHpA	PFOA	PFUA	PFDA	PFUnA	PFDoA	PFBS	PFHxS	PFOS
SL-0420-3	4,4'-MDI	8%	9%	14%	34%	76%	96%	98%	98%	89%	33%	64%	98%
SL-0420-4	4,4'-MDI	-13%	-7%	4%	4%	4%	-3%	-111%	-203%	5%	-7%	-1%	-46%
SL-1-010A	2,4-TDI	8%	6%	13%	38%	87%	99%	100%	99%	93%	6%	69%	99%
SL-1-010B	2,4-TDI	6%	8%	14%	17%	19%	23%	-69%	-249%	-75%	14%	19%	-7%
MB-1-036	TRI+CC	97%	88%	99%	99%	99%	99%	99%	98%	93%	99%	99%	98%
MB-1-037	TRI+CC	99%	106%	99%	99%	99%	99%	98%	94%	83%	99%	99%	98%

21: 2024/08023. 22: 2024/10/23. 43: 2026/09/01
51: B02C
71: Sandvik Ltd
72: CLANCY, Stephen

33: EP(GB) 31: 22172624.3 32: 2022-05-10
54: A CRUSHER FEED STATION
00: -
A crusher feed station (20) mountable on a crusher mainframe (30) to receive bulk material from a feed hopper (80) and a primary feeder (90) also mounted on the mainframe (30) in which the crusher feed station (20) has a scalping deck (100) and a sizing screen (110) configured to produce a first sizing screen oversize product, a second fines product and a third intermediate sized product. The invention also extends to a crusher (10) comprising the crusher feed station (20) and to a method of feeding feed material from a feeding station (20) to a crusher (10).

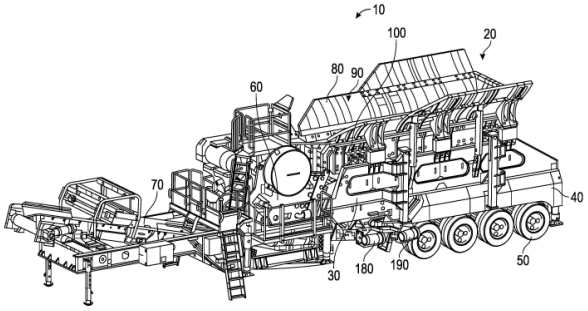

21: 2024/09737. 22: 2024/12/17. 43: 2026/09/18
51: B60K; F16K; F16L; F24D
71: DYNAMIC FLUID CONTROL (PTY) LIMITED
72: SUTER, JONATHAN MICHAEL, VEAL, TREVOR CLINTON
33: ZA 31: 2022/07011 32: 2022-06-24
54: FLOAT ARRANGEMENT AND AIR RELEASE VALVE INCORPORATING SAME
00: -
A float (60) and an air release valve (10) incorporating same. The air release valve (10), includes a main valve body (12), defining a valve chamber (14) having a first opening (16) and a second opening (18). The valve (10) further comprises a cage (24) held relative to main valve body (12), the cage (24) including a lower cage ring (28) with an opening. The float (60) takes the form of a lower float and comprises a lower portion (62) defining a first internal cavity (64) and an open end (66) and a neck portion (68) defining a second internal cavity (70). The neck portion (68) has an outer dimension which is smaller than an outer dimension of the lower portion (62). The neck portion (68) is configured, in use, to extend through the opening of the lower cage ring (28).

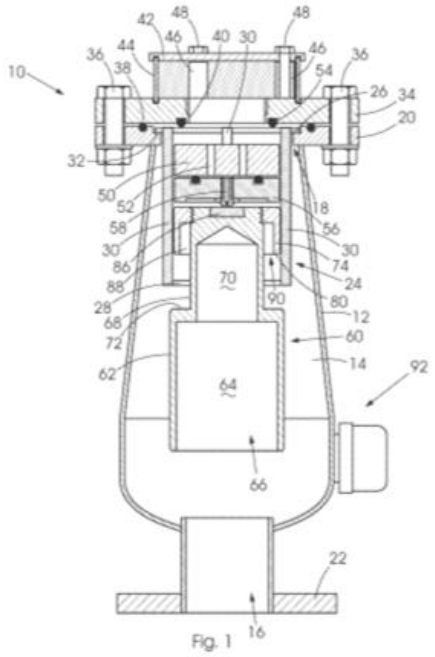

Fig. 1

21: 2025/00275. 22: 2025/01/08. 43: 2026/09/11
51: G16H; A01K
71: EVONIK OPERATIONS GMBH
72: IGWE, Emeka, Ignatius, LEVY, Franziska, FECHER, Marco, FICKLER, Johann, THIEMANN, Frank, BINGEMANN, Patrick
33: EP 31: 22179243.5 32: 2022-06-15
54: DIGITAL MONITORING OF PATHOGEN LOAD IN LIVESTOCK
00: -
The present invention relates to a computer-implemented method for monitoring pathogen load in livestock, using a risk matrix for evaluating the risk of a pathogen load in livestock to cause a disease, a computer program product comprising code portions adapted for performing the method according to the present invention, and a system for monitoring pathogen load in livestock.

21: 2025/00678. 22: 2025/01/21. 43: 2026/10/22
51: A61B
71: LIFELINK INNOVATIONS LIMITED
72: RYAN, Caitriona, OMAR, Muhammad, HAMID, Aaiza, USMAN, Muhammad, GUL, Zaheen, KHAN, Saad Saleem
54: A TUMOUR DETECTION APPARATUS
00: -

Aspects of the present disclosure provides a tumour detection apparatus configured to receive a signal source therethrough for identifying a position of a tumour within the body part. The body part may be a mammary gland such as a patient's breast. The apparatus may include a fractal structure including a cavity for receiving the body part. A plurality of sensing units may be disposed in the cavity on an inner surface of the structure. The sensing units may be each waveguide sections with each waveguide section spaced apart from an adjacent waveguide section to define a distance therebetween. Each waveguide section may have a discrete impedance value whereby a presence of a tumour tissue causes a change in the impedance value due to the effect of the permittivity of the tumour tissue. A control module may be configured to control combinations of the multiple sensing units to determine a position of a tumour.

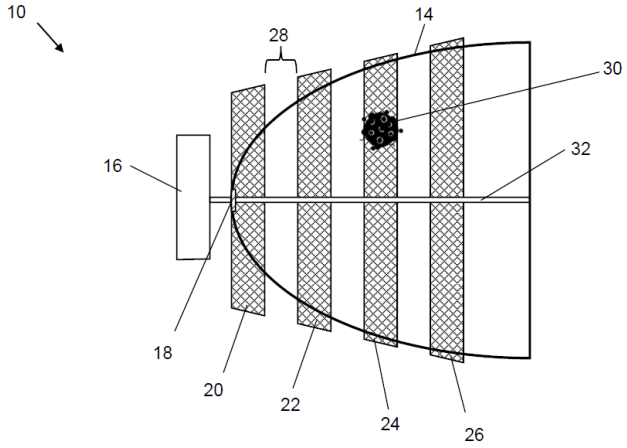

21: 2025/01501. 22: 2025/02/18. 43: 2026/09/04
51: G08C, G01R, H02H, H02B
71: DEHN SE
72: SCHUMACHER, ANDREAS, STAUDIGL, CHRISTIAN, GOTTSCHALK, THOMAS, DIETWEGER, STEFAN
33: DE 31: 10 2024 104 681.3 32: 2024-02-20
54: ARC FAULT PROTECTION SYSTEM
00: -
An arc fault protection system (10) for a switchgear (12) is described. The arc fault protection system (10) has a sensor (14), a sensor module (16) and a central device (18). The sensor (14) is set up to detect an arc-fault-relevant parameter and to generate a sensor signal and to forward it to the sensor module (16). The sensor module (16) is set up to receive and process the sensor signal to obtain a processed sensor signal. The sensor module (16) is further set up to forward the processed sensor signal to the central device (18). The central device (18) is set up to evaluate the processed sensor signal. The sensor (14) is connected in an information-exchanging manner to the sensor module (16) via a bus connection (22), and the sensor module (16) is connected in an information-exchanging manner to the central device (18) via a bus connection (22).

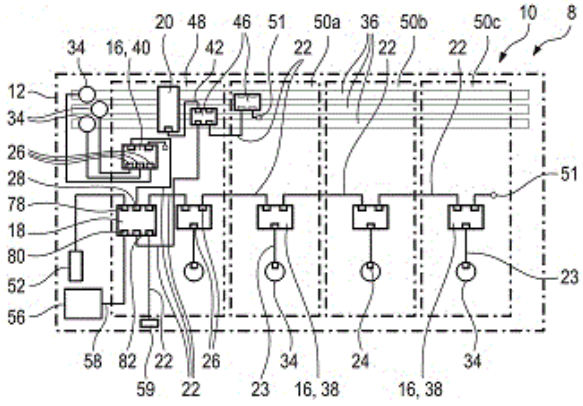

21: 2025/01951. 22: 2025/03/04. 43: 2026/10/26
51: A61K; A61P
71: ZEALAND PHARMA A/S
72: AGERSNAP, Mikkel Askjær, NIELSEN, Thor Schütt Svane
33: US 31: 63/377,868 32: 2022-09-30
54: GLUCAGON-LIKE-PEPTIDE-2 (GLP-2) ANALOGUES AND THEIR MEDICAL USES FOR THE TREATMENT OF SHORT BOWEL SYNDROME (SBS)
00: -
The present invention relates to glucagon-like-peptide-2 (GLP-2) analogues, and in particular to ZP1848 (glepaglutide), and their medical uses for the treatment of short bowel syndrome (SBS), and in particular to the treatments using glepaglutide that result in an early or significant reduction in the parenteral support (PS) required by patients undergoing GLP-2 therapy, even allowing patients to be weaned off the need for PS. In combination with a subpopulation of patients becoming SBS non-PS, the patients further reported an improvement in their Quality-of-Life (QoL).

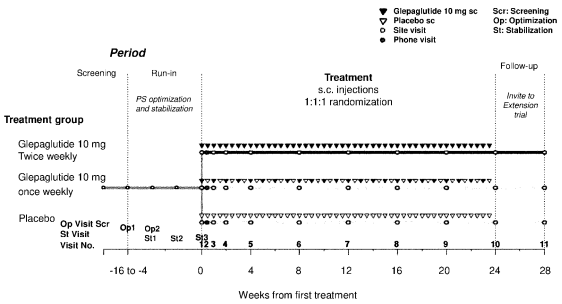

21: 2025/02967. 22: 2025/04/08. 43: 2026/10/09
51: A01N; C12N; A01P
71: MARTIN-LUTHER-UNIVERSITÄT HALLE-WITTENBERG
72: GHASEMZADEH, Aysan, KNOBLICH, Marie, BEHRENS, Sven-Erik, GAGO-ZACHERT, Selma Persida, GURSINSKY, Torsten
33: EP 31: 22205810.9 32: 2022-11-07
54: NUCLEIC ACID ACTIVE AGENTS AGAINST VARIOUS PLANT PATHOGENS
00: -
The invention relates to newly identified nucleic acids, ribonucleic acids (RNAs) and deoxyribonucleic acids (DNAs), specifically esiRNAs/ERNAs (effective small interfering RNAs) and RNAs derived therefrom, as well as eASO (effective antisense DNA oligonucleotides), collectively referred to as eNAs (effective nucleic acids), which are used in RNA silencing/RNAi or RNA silencing/antisense methods, as active agents against various variable plant pathogens. To identify the eNAs, a screening method, hereinafter also referred to as "eNA screen", was applied for the first time in standardised form to objective (target) RNAs of various plant pathogens. As a result, a new class of these active agents against these pathogens was identified and successfully used against them. The invention further relates to the construction of double-stranded ribonucleic acids, edsRNAs (effectively active double-stranded RNAs), which contain nucleotide sequences of identified esiRNAs/ERNAs or related RNAs derived therefrom, and which can be successfully used in the RNA silencing/RNAi methods as active agents in plant protection against these same variable plant pathogens*.

21: 2025/03111. 22: 2025/04/11. 43: 2026/10/09
51: A61K; C07D; A61P
71: SHANGHAI HANSOH BIOMEDICAL CO., LTD., JIANGSU HANSOH PHARMACEUTICAL GROUP CO., LTD.
72: DONG, Jiaqiang, DENG, Xinxian, YU, Wensheng, JIN, Fangfang, GONG, Zhen
33: CN 31: 202211262552.0 32: 2022-10-14
33: CN 31: 202310095444.7 32: 2023-02-06
33: CN 31: 202310115600.1 32: 2023-02-14
33: CN 31: 202310275265.1 32: 2023-03-20
33: CN 31: 202310333326.5 32: 2023-03-30
33: CN 31: 202310465015.4 32: 2023-04-26
33: CN 31: 202310631199.7 32: 2023-05-30
33: CN 31: 202310818758.5 32: 2023-07-04
33: CN 31: 202311011109.0 32: 2023-08-10
54: NITROGEN-CONTAINING HETEROCYCLIC DERIVATIVE INHIBITOR, PREPARATION METHOD THEREFOR AND USE THEREOF
00: -
A nitrogen-containing heterocyclic derivative inhibitor, a preparation method therefor and the use thereof. Specifically disclosed are a compound as represented by general formula (I), a preparation method therefor, a pharmaceutical composition containing the compound, and the use thereof as an inhibitor in treating diseases such as cardiovascular and cerebrovascular diseases, wherein the definition of each substituent in the general formula (I) are the same as those defined in the description.

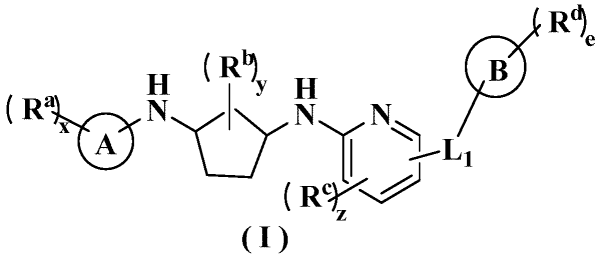

(I)

21: 2025/03161. 22: 2025/04/15. 43: 2026/10/09
51: G06Q
71: SCARSELLI, Bruno
72: SCARSELLI, Bruno
54: ASSET IDENTIFICATION, REGISTRATION, TRACKING AND COMMERCIALIZATION APPARATUSES AND METHODS
00: -
A method of tokenization and use of assets, comprising: a) registering at least one asset on a distributed ledger; b) assigning the at least one asset a fungible or non-fungible token with a public key; c) reading information about the at least one asset using a reading device; d) verifying ownership of the

at least one asset using a private key which matches the public key; and, e) performing a transaction with the at least one asset.

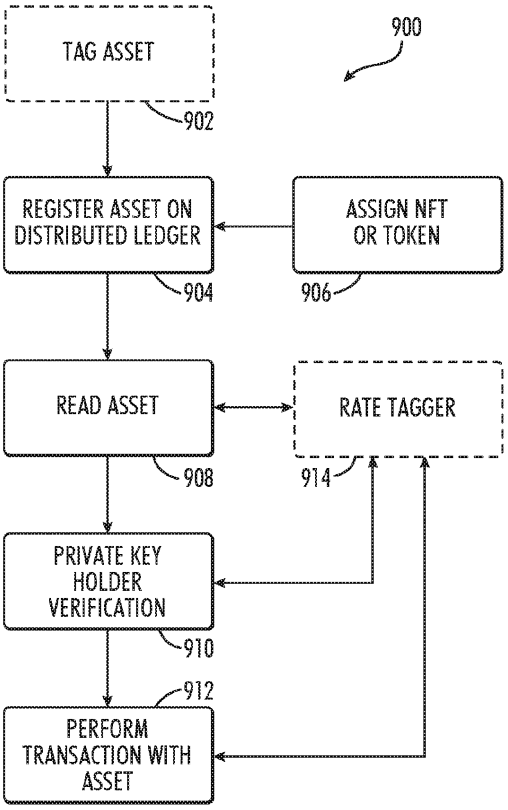

21: 2025/03366. 22: 2025/04/22. 43: 2026/10/30
51: A61K; C07C; C07D; C12N; A61P
71: CERTEST BIOTEC, S.L.
72: GIMÉNEZ WARREN, Javier, HEREDERO GARCÍA, Juan, MARTÍNEZ OLIVÁN, Juan Enrique, PEÑA MORENO, Álvaro, DE MIGUEL SAMANIEGO, Diego, TORO CÓRDOVA, Alfonso
33: EP 31: 22383119.9 32: 2022-11-21
33: EP 31: 23382067.9 32: 2023-01-27
33: EP 31: 23382401.0 32: 2023-04-28
54: IONIZABLE LIPIDS AND LIPID NANOPARTICLES CONTAINING THEREOF
00: -
It is provided an ionizable lipid of formula (I) or a pharmaceutically acceptable salt thereof, or a stereoisomer of any one of them; a lipid nanoparticle comprising the ionizable lipid, particularly, as an encapsulation agent, optionally comprising a pharmaceutically active agent; and a pharmaceutical composition comprising the lipid nanoparticle. It is also provided a lipid nanoparticle or a pharmaceutical composition comprising thereof for use in medicine, and the use of the lipid nanoparticles as an encapsulating agent.

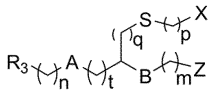

(I)

21: 2025/03412. 22: 2025/04/23. 43: 2026/10/27
51: A61K; C07K; C12P; A61P
71: OBI PHARMA, INC.
72: LAI, Ming-Tain, CHOU, Jun-Hong, HSIEH, Yin-Cheng, HUANG, Teng-Yi, HUANG, Chen-Ping, FUNG, Ka-Shu, HSIA, Chi-Sheng
33: US 31: 63/382,951 32: 2022-11-09
54: GLYCOSYNTHASE VARIANTS FOR ANTIBODY-DRUG CONJUGATE ENGINEERING
00: -
The present disclosure relates to novel glycosynthase enzymes for antibody-drug conjugates (ADCs) engineering. The enzyme variants, termed EndoSd-D232M and EndoSz-D234M, contain the glycan conjugation and/or modification activity at the conserved N297 glycosylation site of Fc region of an exemplary antibody. It has been demonstrated that the glycosynthase activities of EndoSd-D232M and EndoSz-D234M can be applied to various mAbs targeting different receptors, including, but not limited to, Globo H, SSEA-4, SSEA-3 series of receptors (OBI-888; Globo H ganglioside), Herceptin (Her 2 receptor), Peijeta (Her 2 receptor) and Vectibix (EGFR receptor). It has been found that both mAb-GlcNAc and mAb- GlucNAc(F) were suitable substrates for both EndoSd-D232M and EndoSz-D234M.

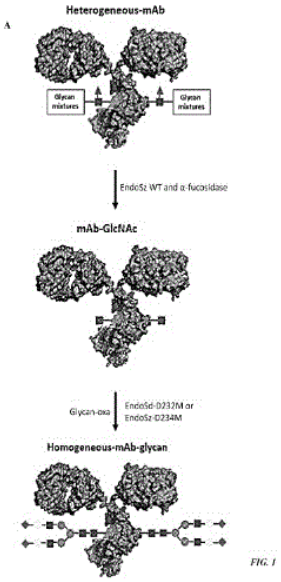

FIG. 1

21: 2025/03629. 22: 2025/04/29. 43: 2026/10/05
51: G01N
71: SERUM INSTITUTE OF INDIA PRIVATE LIMITED
72: GAIROLA, Sunil Jagdishprasad, GOEL, Sunil Kumar, SHARMA, Pankaj Keshav, DESHPANDE, Gaurav Vinay, PENDHARKAR, Sumeet Vilas
33: IN 31: 202421034262 32: 2024-04-30

54: NOVEL REFERENCE STANDARD AND IMPROVED METHOD FOR QUANTIFICATION OF SACCHARIDE IN VACCINE

00: -

The present disclosure relates to a method for quantification of total polysaccharide as well as free polysaccharide content in a conjugate bulk or vaccine composition by spectrophotometry or colorimetry. Colorimetry method such as phenol sulfuric acid method provides accurate quantification of total and free polysaccharide content in conjugate bulk or vaccine composition when mixture of saccharides is used as a reference standard. Further, the method does not use any unstable reagent (like anthrone) and a pre-treatment step for removal of excipient avoids subsequent interference with phenol sulfuric acid assay. The present method exhibits several advantages such as preparation of standard that provides minimum deviation/ error, no interference of excipients/ impurities/ other antigens like polysaccharides/ carrier proteins; additionally the method is robust, user friendly, cost effective with minimum turnaround time required. Present disclosure also provides a method for determining the potency and shelf life of vaccines.

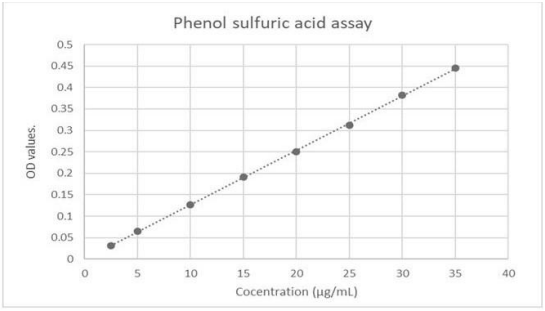

21: 2025/03643. 22: 2025/04/29. 43: 2026/10/30
51: A61K; C12N; A61P
71: KYLONOVA (XIAMEN) BIOPHARMA CO., LTD.
72: CUI, Kunyuan, LU, Xueqin
33: CN 31: 202211304230.8 32: 2022-10-24

54: RNA INHIBITOR FOR INHIBITING LPA GENE EXPRESSION AND USE THEREOF

00: -

Provided is an RNA inhibitor for inhibiting LPA gene expression or a pharmaceutically acceptable salt thereof. The RNA inhibitor is formed by base pairing of a sense strand and an antisense strand having a chain length of 15-30, and the chain length is preferably 19-23; at least 85% of bases of the sense strand and the antisense strand are complementary to each other; -OH at position 2' of some or all of nucleotide glycosyls of the sense strand and/or the antisense strand is substituted with fluorine or methoxy; and phosphate bonds among three adjacent nucleotides of at least one of terminuses of the sense strand and/or antisense strand can be thioated. The structure of the RNA inhibitor may also contain vector structures 5'MVIP and 3'MVIP. The RNA inhibitor provided in the present application interferes with the translation template function of the LPA mRNA, continuously and efficiently inhibits LPA gene expression, and can be used for treating and/or preventing diseases related to the horizontal increase of LP(a).

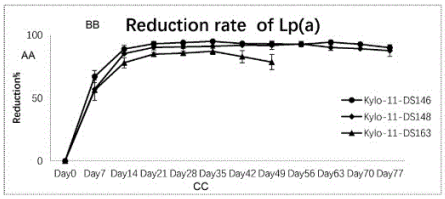

图 11

AA Reduction %
BB Reduction rate of Lp(a)
CC Day

21: 2025/03645. 22: 2025/04/29. 43: 2026/10/30
51: B03C; B03D; C22B
71: CLARIANT INTERNATIONAL LTD
72: BICALHO, Leandro Seixas, COSTA, Nathalia, DA SILVA, Wagner Claudio, KRULL, Matthias
33: EP 31: 22206826.4 32: 2022-11-11
54: ANIONIC AMINO ACID-BASED SURFACTANTS FOR THE BENEFICIATION OF MAGNETIC MINERALS FROM LOW-GRADE ORES
00: -
The present invention is directed to the beneficiation of low-grade iron bearing minerals via wet magnetic separation. More particularly, the invention is directed to the enhancement of the magnetic separation process efficiency by the addition of an anionic amino acid-based surfactant to the low-grade iron ore.



21: 2025/03862. 22: 2025/05/07. 43: 2026/10/20
51: A01G; F24F
71: PASTORAL WATER CONSERVANCY SCIENCE RESEARCH INSTITUTE OF THE MINISTRY OF WATER RESOURCES
72: GAO, Tianming, LENG, Yanjie, WEI, Lifeng, HUANG, Duan, LI, Chengcheng, GUO, Jiuming, HE, Yu, YAO, Zhenyu, CHEN, Yuxin, ZHAO, Tianqi, LIU, Xinyu, ZHOU, Xu
33: CN 31: 2024210534748 32: 2024-05-15
54: SCIENCE POPULARIZATION MODEL DEVICE FOR DESERTIFICATION PREVENTION AND CONTROL
00: -
Disclosed is a science popularization model device for desertification prevention and control features a wind tunnel with an openable sealing top plate. The wind tunnel includes a fan section, stabilization section, and experimental section, with the experimental section connecting to a transparent collection section. The fan section has an air inlet and an electric fan. The stabilization section contains a honeycomb and damping net. The experimental section holds sands, a plant model, an engineering measure model, with a speed measuring device installed. The collection section is taller than the wind tunnel and has an openable air-permeable mesh net. This device is designed to demonstrate the wind and sand movement process, as well as the wind prevention and sand fixation effects of various plant and engineering combinations in desertification control. It aims to provide the public with an understanding of desertification prevention and the impact of different methods on soil stabilization.

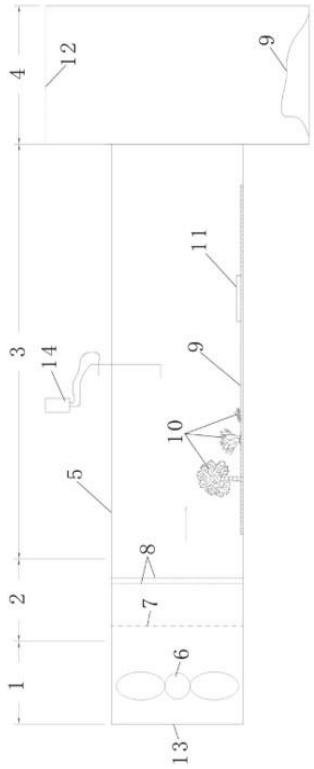

21: 2025/03871. 22: 2025/05/07. 43: 2026/09/09
51: H04N
71: NOKIA TECHNOLOGIES OY
72: GHAZNAVI YOUVALARI, Ramin, ASTOLA, Pekka, LAINEMA, Jani
33: FI 31: 20225928 32: 2022-10-13
54: AN APPARATUS, A METHOD AND A COMPUTER PROGRAM FOR VIDEO CODING AND DECODING

00: -
A method comprising: receiving an image block unit of a frame, the image block unit comprising samples in color channels, wherein the color channels comprise at least one chrominance channel and one luminance channel (1200); reconstructing samples of said luminance channels of the image block unit (1202); determining a reference area for predicting target samples of at least one color channel of the image block unit, wherein said reference area comprises one or more of reference samples in a neighboring block in a current color channel/frame, in the neighboring of a co-located block in a reference color channel/frame; and/or inside the co-located block in the reference color channel/frame (1204); determining gradient value(s) and/or location value(s) of the spatial samples in said reference area to be used in a cross-component prediction model (1206); and predicting said target samples of at least one color channel of the image block unit using the cross-component prediction model based on at least said gradient value(s) and/or said location value(s) of the spatial samples in said reference area (1208).

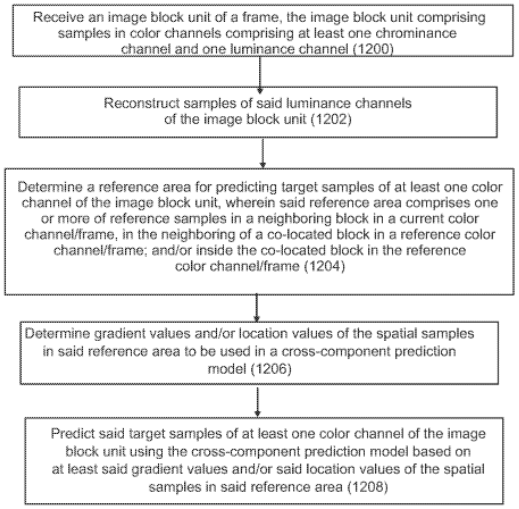

21: 2025/04081. 22: 2025/05/14. 43: 2026/09/09
51: H04W
71: NOKIA TECHNOLOGIES OY
72: MICHALOPOULOS, Diomidis, SAHIN, Taylan, ASHRAF, Muhammad, Ikram, LIU, Yong, SÄILY, Mikko, KESHAVAMURTHY, Prajwal
54: POSITIONING
00: -
Embodiments of the present disclosure relate to for positioning. A first device receives, from a fourth device, first configuration information for maintaining or establishing a positioning session associated with the first device. The first device performs, based on the first configuration information and with positioning assistance of a second device, positioning of the first device while being in an out-of-coverage status with respect to the fourth device.

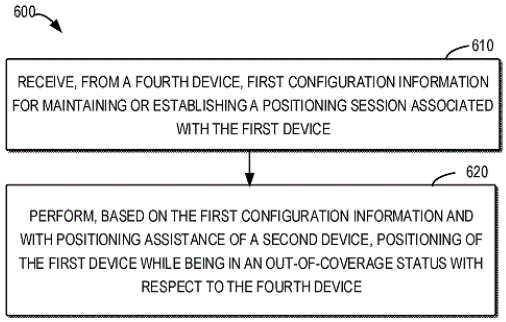

21: 2025/04214. 22: 2025/05/16. 43: 2026/09/04
51: H04W; H04L
71: WIREPAS OY
72: KASEVA, VILLE, RAOUL, GWENDAL
33: FI 31: 20225999 32: 2022-11-04
54: ADDRESS GENERATION SYSTEM FOR A WIRELESS COMMUNICATION NETWORK
00: -
The application relates to an address generation system (100) for a wireless communication network (102) that comprises at least one sink device (104, 104a, 104b) and at least one radio node device (108, 108a, 108b) Each radio node device (108, 108a, 108b) is configured to communicate with the at least one sink device or other radio node device (108) belonging to the at least one radio node device. Each radio node device is further configured to generate its internet address (IA) comprising a sink identifier (ID) of a sink device (104, 104a, 104b) belonging to the at least one sink device and a wireless communication network address (NA) of said radio node device, so that said radio node device is accessible through said sink device.

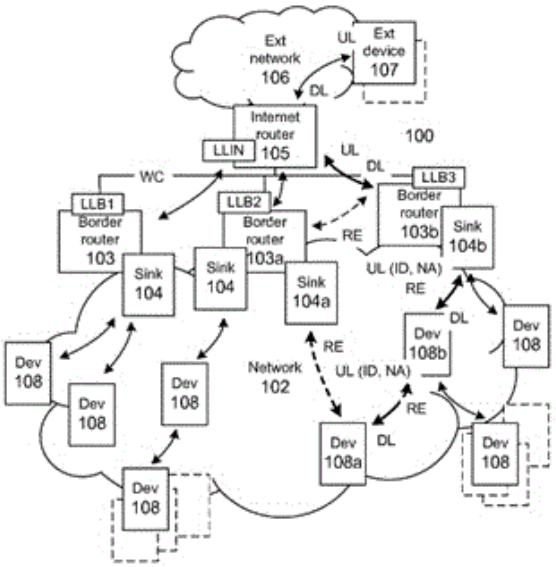

21: 2025/04341. 22: 2025/05/21. 43: 2026/10/02
51: A61F
71: PAUL HARTMANN AG
72: CIFRIC, Nedzad, KAUTZSCH, Florian, EILERS, Jörg, BUCH, Tamara
33: DE 31: 10 2022 134 647.1 32: 2022-12-22

54: ABSORBENT INCONTINENCE ARTICLE IN THE FORM OF BRIEFS

00: -

The present invention relates to an absorbent incontinence article in the form of briefs, comprising a front abdominal portion and a rear back portion which are spaced apart from one another in a longitudinal direction by a distance D, and a crotch portion which extends in the longitudinal direction between the abdominal portion and back portion and is irreversibly joined to the crotch portion in a front overlapping region and to the back portion in a rear overlapping region, wherein the crotch portion has an absorbent body and a liquid-impermeable backsheet material, wherein, on a top side, facing away from the body, of the backsheet material, a nonwoven layer is provided, which ends in the longitudinal direction in front of a front end of the backsheet material and/or in front of a rear end of the backsheet material, wherein the nonwoven layer is joined to the backsheet material by means of a first and of a second marginal longitudinal adhesive strip extending in the longitudinal direction and by means of multiple first longitudinal adhesive strips that are on the inside with regard to the marginal longitudinal adhesive strips in a transverse direction between the marginal longitudinal adhesive strips, extend in the longitudinal direction, are parallel to one another and are spaced apart from one another by adhesive-free longitudinal strips.

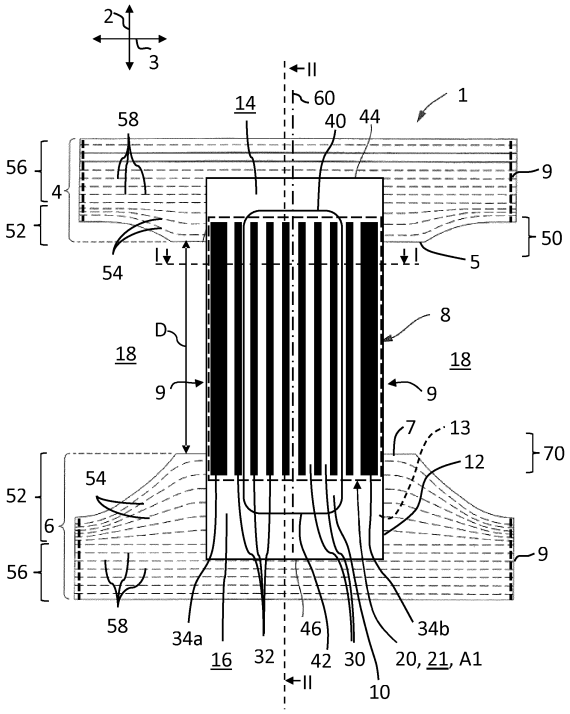

21: 2025/04575. 22: 2025/05/28. 43: 2026/09/09
51: H04W
71: NOKIA TECHNOLOGIES OY
72: KARIMIDEHKORDI, Ali, AWADA, Ahmad, GÜRSU, Halit Murat, KOLEHMAINEN, Niko, DALSGAARD, Lars, HENTTONEN, Tero, KAINULAINEN, Jani-Pekka

54: EARLY INDICATION FOR DUAL CONNECTIVITY AND/OR CARRIER AGGREGATION

00: -

Method comprising: monitoring whether a base station receives an indication from a terminal within a connection establishment procedure for connecting the terminal with the base station in a connected state that a condition is met by performance measurements of at least one candidate cell performed while the terminal was not in the connected state, wherein the connection establishment procedure comprises: a random access procedure, or a connection setup request, or a connection resume request; if the indication is received: • requesting each of the candidate cells to prepare as a secondary cell for carrier aggregation

or dual connectivity for the terminal; • determining a suitable cell of the candidate cells, wherein the performance measurement of the suitable cell meets the condition; • providing the terminal with a configuration comprising the suitable cell as a secondary cell; • informing the suitable cell that the terminal is configured with the suitable cell as the secondary cell.

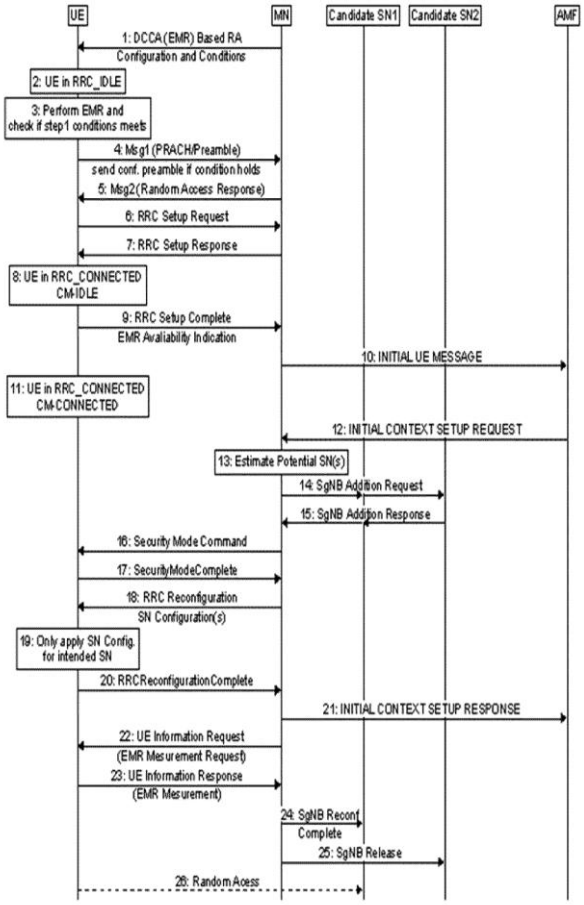

21: 2025/04712. 22: 2025/06/02. 43: 2026/09/09
51: H04L; H04W
71: NOKIA TECHNOLOGIES OY
72: KOSKINEN, Jussi-Pekka, TURTINEN, Samuli, Heikki, WU, Chunli

54: SMALL DATA TRANSMISSION CONTROL

00: -

Example embodiments of the present disclosure are related to small data transmission control. A method comprising: receiving, by a terminal deice and from a network node, small data transmission, SDT, configuration information; determining,, by the terminal device and based on the SDT configuration information, whether a mobile terminated, MT, SDT procedure and/or a mobile originated, MO, SDT procedure is allowed or not allowed to be used for the terminal device; and initiating or applying, by the terminal device, at least one of the MT SDT procedure or the MO SDT procedure based on the determination and/or the SDT configuration information.

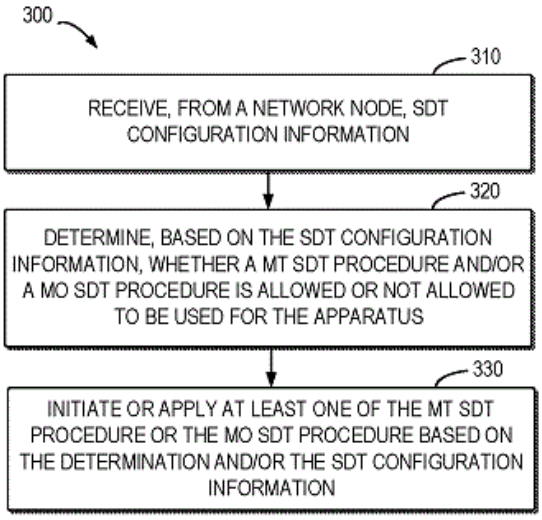

21: 2025/04722. 22: 2025/06/02. 43: 2026/09/09
51: A61K; C07K; C12N
71: BLUE LAKE BIOTECHNOLOGY, INC.
72: HE, Biao, JIN, Hong, GINGERICH, Maria, Cristina
33: US 31: 63/382,453 32: 2022-11-04

54: RECOMBINANT RSV VACCINE: METHODS OF MAKING AND USING THE SAME

00: -

Compositions and methods of inducing an immune response in a subject having RSV comprising administering a pharmaceutical composition comprising a prophylactic vaccine against RSV infection, wherein the vaccine comprises a live recombinant canine parainfluenza (CPI) vector backbone engineered to express a RSV F protein.

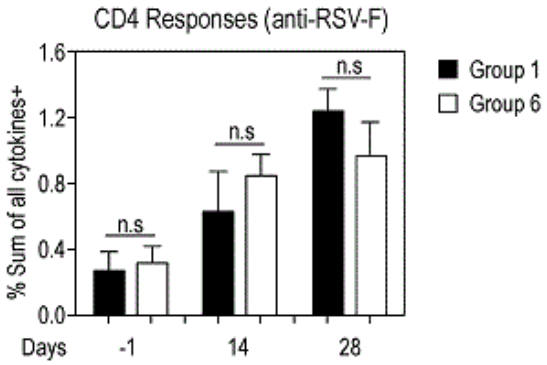

21: 2025/04783. 22: 2025/06/04. 43: 2026/09/09
51: H04B; H04W; H04L
71: NOKIA TECHNOLOGIES OY
72: DU, Lei, DALSGAARD, Lars, RANTA-AHO, Karri, Markus, KAINULAINEN, Jani-Pekka

54: BEAM INFORMATION TRIGGERING FOR CELL ACTIVATION

00: -

Example embodiments of the present disclosure relate to beam information triggering for cell activation. A first device obtains, from a second device, via a first cell, a configuration for adding a second cell for the first device. Th first device determines, based on at least one condition associated with the added second cell being met, that beam information of the second cell is to be transmitted. The first device transmits the beam information to the second device. In this way, the beam information transmission may be facilitated, and time consumption may be reduced.

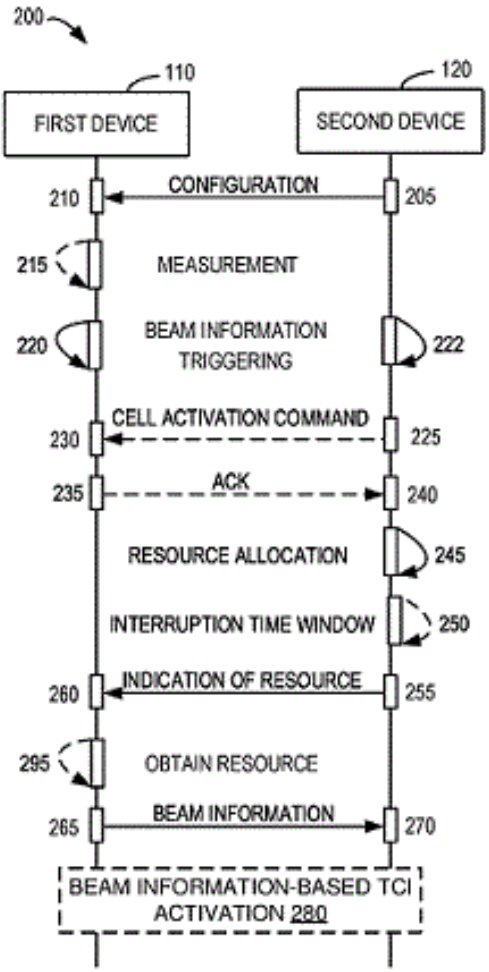

21: 2025/04785. 22: 2025/06/04. 43: 2026/09/16
51: H04W
71: NOKIA TECHNOLOGIES OY
72: TURTINEN, Samuli, Heikki, RANTA-AHO, Karri, Markus, WU, Chunli, HENTTONEN, Tero

54: POWER HEADROOM FOR SECONDARY CELL

00: -

Embodiments of the present disclosure relate to devices, methods, apparatuses and computer readable storage media for virtual power headroom (PH) calculation for a secondary cell (SCell). The method comprises: obtaining, by a terminal device, information indicative of one or more parameters configured for a first serving cell, wherein the terminal device is connected with at least the first serving cell and a second serving cell; and calculating, by the terminal device, a power headroom value for the second serving cell by

applying the one or more parameters configured for the first serving cell.

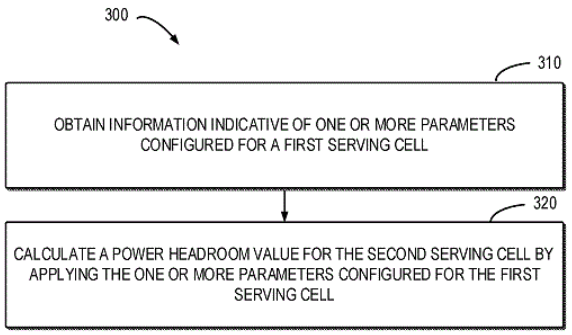

21: 2025/04786. 22: 2025/06/04. 43: 2026/09/09
51: G01S; H04W
71: NOKIA TECHNOLOGIES OY
72: SAHIN, Taylan, SEHIER, Philippe, MICHALOPOULOS, Diomidis, SÄILY, Mikko, BARACCA, Paolo
33: GB 31: 2216596.3 32: 2022-11-08

54: METHOD AND APPARATUS FOR INDICATING POSITIONING AVAILABILITY BASED ON NETWORK CONGESTION

00: -

Techniques for controlling a positioning service are provided. For example, an apparatus in a user equipment (UE) is provided. The apparatus comprises: at least one processor; and at least one memory including computer program code. The computer program code causes the apparatus, when executed with the at least one processor, to at least: receive a first message related to a degradation of a first positioning technique related to the positioning service and control the positioning service based on the first message.

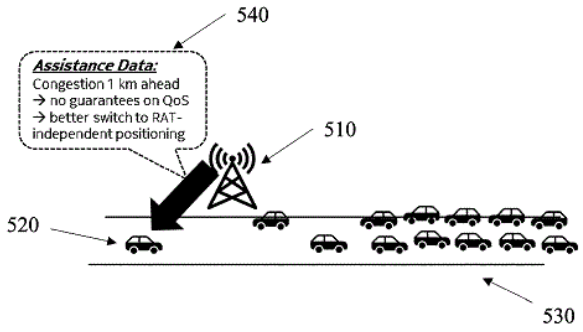

21: 2025/04788. 22: 2025/06/04. 43: 2026/09/09
51: H04W
71: NOKIA TECHNOLOGIES OY
72: KIILERICH PRATAS, Nuno, Manuel, WILDSCHEK, Torsten, ABREU, Renato, Barbosa, SANCHEZ, Laura Luque, LIU, Jianguo, BUTHLER, Jakob Lindbjerg

54: CONSISTENT LISTEN BEFORE TALK FAILURE RECOVERY PROCEDURE FOR SIDELINK OPERATION IN UNLICENSED BANDS

00: -

Systems, methods, apparatuses, and computer program products for detecting consistent listen before talk failure cases and suitably recovering from such failure cases in the implementation of sidelink for unlicensed bands are provided. For example, a method can include monitoring a transmission resource pool in which the apparatus is operating. The transmission resource pool can include resource block sets, each of which can be monitored. The monitoring can be applied to resource block sets for which a prohibit timer is not running or is expired. The monitoring can be performed to detect listen before talk failures of the apparatus for each monitored resource block set of the plurality of resource block sets. The method can also include triggering or declaring a consistent listen before talk failure for the monitored resource block set when the count value of detected failures exceeds a threshold.

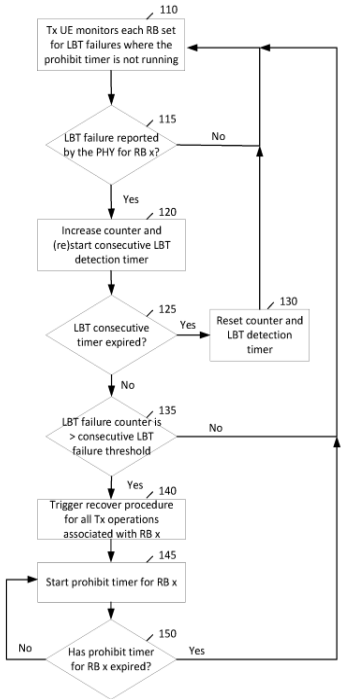

21: 2025/04818. 22: 2025/06/05. 43: 2026/10/09

51: G01N
71: ONCOMATRYX BIOPHARMA, S.L.
72: SIMÓN BUELA, Laureano, DOMÍNGUEZ HORMAETXE, Saioa, CONCHA LÓPEZ, Ángel, OTERO ALÉN, Begoña, ESTÉVEZ PÉREZ, Lara Sofía, OTERO ALÉN, Maria
33: EP 31: 22383195.9 32: 2022-12-07
54: COMBINING THE EXPRESSION LEVELS OF KRT19 AND COL1A2 TO PRODUCE A SCORE FOR SCREENING AND DIAGNOSING CANCER
00: -
The present invention provides an epithelial and stromal biomarker combination that is useful in determining whether a subject has a high or low likelihood of a tumor. In particular, the invention provides methods for screening, detecting or monitoring a tumor in a subject, the method comprising combining the expression levels of KRT19 and COL1A2 to produce a score and based on that score, determining whether the subject has a high likelihood or low likelihood of a tumor.

21: 2025/04973. 22: 2025/06/11. 43: 2026/09/22
51: A01M; G06V
71: Spraying Systems Co.
72: PHILIPSEN, Mark Philip, VAN DEN BULCKE, Hendrik A., ANTHONIS, Jan Emma Louis
33: US 31: 63/433,101 32: 2022-12-16
54: SPOT WEED DETECTION AND TREATMENT WITHIN A FIELD OF VIEW IN ACCORDANCE WITH MACHINE LEARNING TRAINING
00: -
A weed spot-spraying system is described for carrying out a spot-based weed spraying method based upon a classification value rendered from a sub-field image in accordance with a machine learning-based trained model applied by a processor to the sub-field image. The system includes a camera; a spray nozzle assembly including a spray nozzle; and a processor. The method carried out by the system includes acquiring, by the camera, a full field of view image of a crop floor. The method further includes extracting, from the full field of view image, a sub-field image corresponding to the spray nozzle positioned to provide a spray field extending over a part of the crop floor depicted in the sub-field image; rendering, by the processor in accordance with the machine learning-based trained model, a classification for the sub-field image; and selectively activating the spray nozzle in accordance with the classification for the sub-field image.

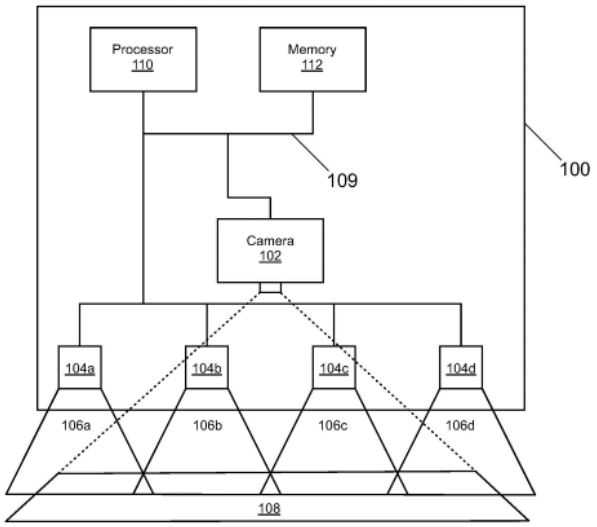

21: 2025/05120. 22: 2025/06/13. 43: 2026/10/20
51: G06F; G06K; H04L; G06Q
71: MYCASHLESS SAPI DE CV
72: BECERRA MORALES, Enrico
33: MX 31: MX/a/2022/016282 32: 2022-12-15
54: METHOD,APPARATUS,AND SYSTEM FOR TRANSFERING DATA
00: -
A method and system for transferring encrypted data from a first electronic device to a second electronic device, each of the electronic devices including an input/output interface, a memory and a processor. The method can be carried out without the first and/or second electronic device having an active data signal. The method includes the steps of displaying a first encrypted two-dimensional code at the output interface of the first electronic device, reading the first encrypted two-dimensional code with the input interface of the second electronic device, and decrypting the first two-dimensional code with the processor and memory of the second electronic device, generating a second encrypted two-dimensional code with the processor and memory of the second electronic device in response to the first decrypted two-dimensional code, and displaying the second encrypted two-dimensional code on the output interface of the second electronic device, reading the second encrypted two-dimensional code with the input interface of the first electronic device and decrypting the second two-dimensional code with the processor of the first electronic device and generating an action on the first electronic device based on the second

decrypted two-dimensional code. The second two-dimensional code is a plurality of two-dimensional codes.

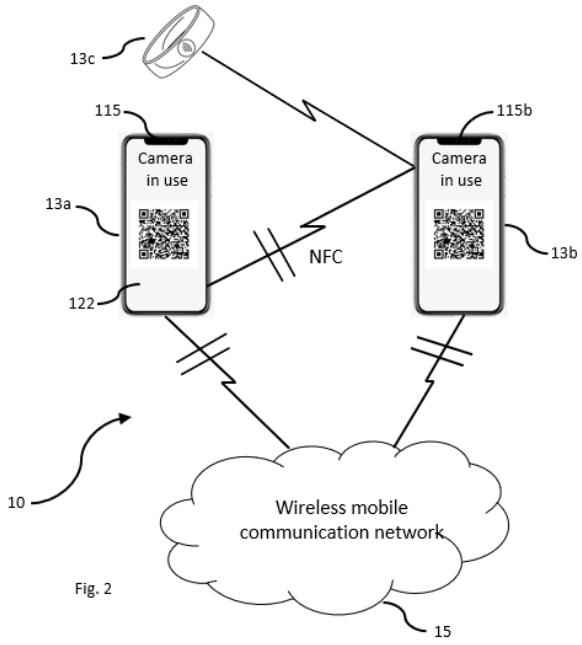

Fig. 2

21: 2025/05267. 22: 2025/06/20. 43: 2026/10/09
51: A61K; C07C; A61P
71: ACTIMED THERAPEUTICS LTD, FARADAY PHARMACEUTICALS, INC.
72: JOSEPH, Melissa, LAWRENCE, Ronnie Maxwell, MORTEN, Elaine, CHITRE, Saurabh, KELK, Natalie Louise, CALLAHAN, Craig
33: GB 31: 2301180.2 32: 2023-01-27
54: SALT OF S-OXPRENOLOL
00: -
The invention relates to a pharmaceutically acceptable acid addition salt of: (i) S- oxprenolol; and (ii) phosphoric acid. Medical uses of the salt and compositions comprising the salt are also described.

21: 2025/05771. 22: 2025/07/07. 43: 2026/09/01
51: A23C; A23L; A61L; B01J; C02F
71: Lyras DK ApS
72: KRISTENSEN, Mathias Kræmmergaard, VESTDAM, Kasper Dalager, MICHAELSEN, Thomas Yssing, HØYGAARD-JØRGENSEN, Palle
33: EP(DK) 31: 23158397.2 32: 2023-02-24
54: A SPACE OPTIMIZED ULTRA VIOLET GERMICIDAL IRRADIATION SYSTEM
00: -
The invention relates to a UV-germicidal irradiation system for treatment of liquids, such as opaque liquids, slurries, or fermentation liquids.

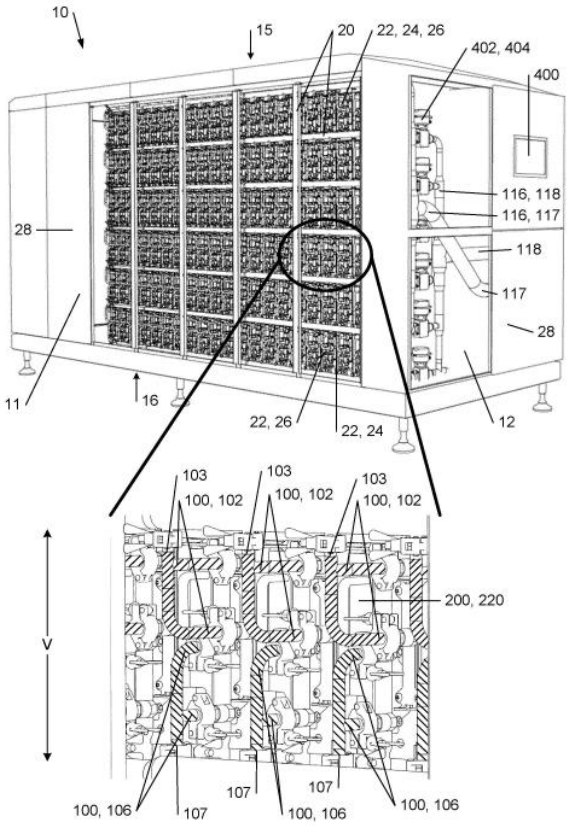

21: 2025/06010. 22: 2025/07/15. 43: 2026/09/16
51: C12N
71: ACURASTEM INCORPORATED
72: CHANG, WEN-HSUAN, ICHIDA, JUSTIN K
33: US 31: 63/513,063 32: 2023-07-11
33: US 31: 63/482,514 32: 2023-01-31
54: SYF2 ANTISENSE OLIGONUCLEOTIDES
00: -
The present invention relates to SYF2 antisense oligonucleotides (ASOs), pharmaceutical compositions containing them, and methods for treating, inhibiting, suppressing, and preventing neurological diseases with them.

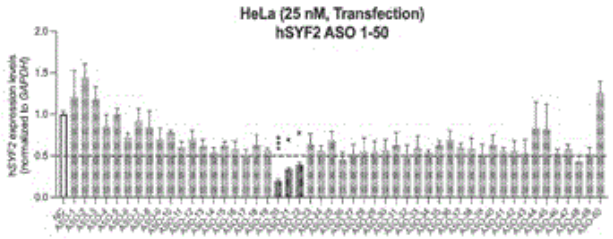

21: 2025/06130. 22: 2025/07/18. 43: 2026/10/22
51: C12Q
71: ALCEDIAG
72: WEISSMANN, Dinah, SALVETAT, Nicolas
33: EP 31: 22215708.3 32: 2022-12-21

54: DIFFERENTIAL DIAGNOSING OF BIPOLAR VERSUS UNIPOLAR DISORDER IN PATIENT DURING DEPRESSION PHASES USING A TO I RNA EDITING ZNF267 GENE

00: -

The present invention is drawn to a method for differential diagnosing of bipolar versus unipolar disorder in a human patient during depression phases from a biological sample of said patient, comprising at least the determination of the relative proportion of RNA editing variant (s) of the A to I editing RNA ZNF267 gene The present invention is also directed to a method for monitoring treatment for depressed patient presenting bipolar or unipolar disorder. Finally, the present invention provides kit for differential diagnosing of bipolar versus unipolar disorder in a patient during depression phases.

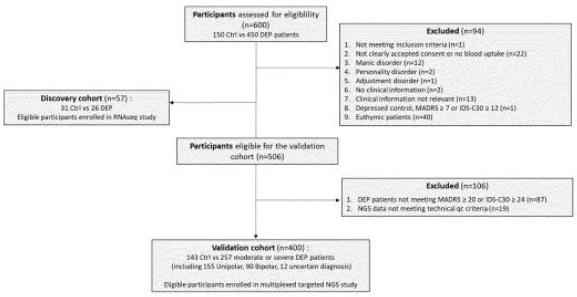

21: 2025/06345. 22: 2025/07/29. 43: 2026/09/29
51: H04N
71: INTERDIGITAL VC HOLDINGS, INC.
72: LUO, JIANCONG, HE, YUWEN
33: US 31: 62/814,611 32: 2019-03-06
33: US 31: 62/802,428 32: 2019-02-07
33: US 31: 62/833,999 32: 2019-04-15

54: SYSTEMS, APPARATUS AND METHODS FOR INTER PREDICTION REFINEMENT WITH OPTICAL FLOW

00: -

A method of decoding a video wherein a sub-block-based motion prediction signal is generated for a sub-block of a block of a picture based on an affine motion model associated with said block. A set of pixel-level motion vector difference values is determined for said sub-block using said affine motion model associated with said block. Spatial gradients of said sub-block-based motion prediction signal are determined, for each sample location of said sub-block. An extended sub-block is formed to include said sub-block-based motion prediction signal and a plurality of samples surrounding said sub-block. Each of said plurality of samples surrounding said sub-block is obtained based on integer motion compensation. A motion prediction refinement signal is determined for said sub-block, based on said determined set of pixel-level motion vector difference values and said determined spatial gradients. Said motion prediction signal is combined with said motion prediction refinement signal to produce a refined motion prediction signal for said sub-block. The video is decoded using the refined motion prediction signal.

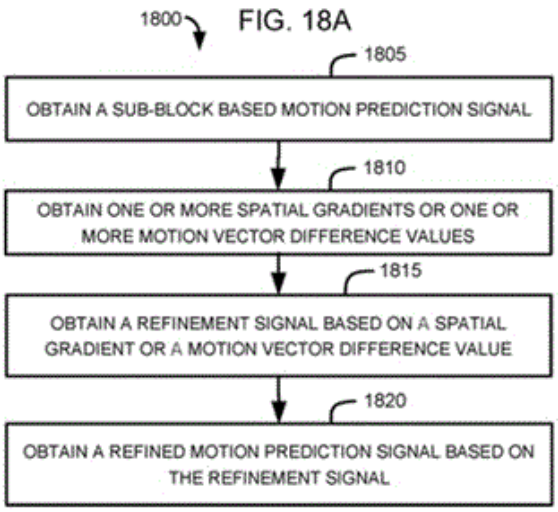

21: 2025/06361. 22: 2025/07/29. 43: 2026/11/03
51: A01N; C07K; C12N; C12P; A01P
71: MICROPEP TECHNOLOGIES S.A.
72: SUBRINI, Orso, CARTIER, Renaud, COURBOT, Mikaël Stéphane

33: US 31: 63/486,652 32: 2023-02-23
33: US 31: 63/486,653 32: 2023-02-23
33: US 31: 63/486,654 32: 2023-02-23

54: METHODS AND COMPOSITIONS FOR PRODUCTION AND PURIFICATION OF PEPTIDES

00: -

Provided herein are methods of producing peptides from inclusion bodies by linking two or more oligopeptides to an insoluble carrier polypeptide like onconase or TAF12, wherein the oligopeptides are released from the insoluble carrier protein by sequence-specific, chemical cleavage of the peptide bond using acids like acetic acid. Also provided herein are onconase variants with improved properties.



21: 2025/06431. 22: 2025/07/30. 43: 2026/09/08
51: H02H; B60M; G08B
71: CATERPILLAR INC.
72: STRASHNY, IGOR
33: US 31: 18/105,024 32: 2023-02-02

54: THREE-RAIL POWER SUPPLY SYSTEM

00: -

A three-rail power supply system (100) includes a power supply (112) having positive (120), negative (122), and neutral terminals (124), a rail system (102) having a power supply end (104) and a termination end (106), and an asymmetric resistor network (108). The rail system (102) includes a positive rail (114), a negative rail (116), and a ground rail (118) coupled to the positive terminal (120), the negative terminal (122), and the neutral terminal (124), respectively. The negative rail (116) is disposed parallel to the positive rail (114). The ground rail (118) is disposed in parallel to, and between, the positive rail (114) and the negative rail (116), and is electrically grounded (126) at a plurality of intervals between the power supply end (104) and termination end (106). The asymmetric resistor network (108) includes two pairs of resistors (128, 130, 132, 134) asymmetrically coupled to the rail system (102) at the power supply end (104) and termination end (106), and is configured to limit a fault current through a faulty connection in response the positive, negative, and/or ground rails (114, 116, 118) experiencing the faulty connection.

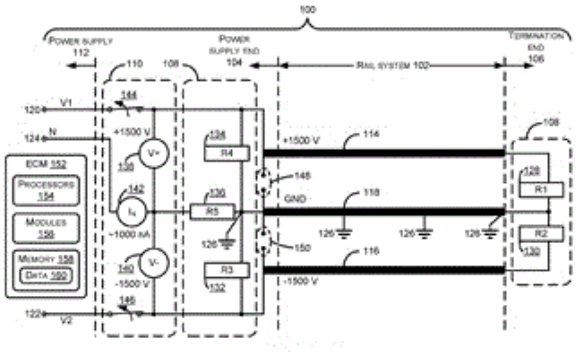

21: 2025/06477. 22: 2025/07/31. 43: 2026/09/01
51: C07D
71: Syngenta Crop Protection AG
72: BERGES, Julien, ANTELMANN, Bjoern, WHITTON, Alan John
33: EP(CH) 31: 23158531.6 32: 2023-02-24

54: PROCESS FOR THE PREPARATION OF ISOXAZOLINE DERIVATIVES

00: -

The present invention relates to a process for the preparation of a compound of formula III by reacting a compound of formula III by reacting a compound of formula II with hydroxylamine or its salt, a base, a chiral catalyst, and an organic solvent, wherein said base comprises an anion exchange resin and optionally alkali metal salt, wherein X is hydrogen or halogen, and R is selected among -COOH, -C(=O)OC_{1-6}alkyl, -CN, -C(=O)Obenzyl, and -C(O)N(R^1R^2) wherein R^1 and R^2 are independently selected from H and C_{1-6} alkyl, and wherein when R is selected among -C(=O)OC_{1-6}alkyl, -CN, -C(=O)Obenzyl, and -C(O)N(R^1R^2), a compound of formula III' is obtained (III'), the R group of the compound of formula IIP being then hydrolysed to obtain the compound of formula III.

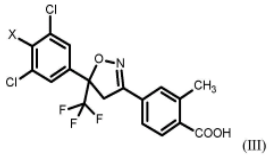

(III)

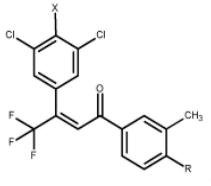

(II)

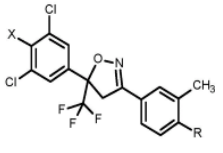

(III'),

21: 2025/06516. 22: 2025/08/01. 43: 2026/09/04

51: H04N
71: GUANGDONG OPPO MOBILE TELECOMMUNICATIONS CORP., LTD.
72: HUO, JUNYAN, MA, YANZHUO, YANG, FUZHENG, DU, HONGQING, LI, MING
54: ENCODING METHOD, DECODING METHOD, CODE STREAM, ENCODER, DECODER, AND STORAGE MEDIUM
00: -
Disclosed in embodiments of the present application are an encoding method, a decoding method, a code stream, an encoder, a decoder, and a storage medium. The decoding method comprises: an encoder determines a first template corresponding to a current block; determines, according to the first template, one or more block vectors corresponding to the current block; determines one or more reference blocks of the current block according to the one or more block vectors, and determines a predicted value of the current block according to the one or more reference blocks; and determines a reconstruction value of the current block according to the predicted value of the current block. The encoding method comprises: a decoder determines a first template corresponding to a current block; determines, according to the first template, one or more block vectors corresponding to the current block; and determines one or more reference blocks of the current block according to the one or more block vectors, and determines a predicted value of the current block according to the one or more reference blocks.

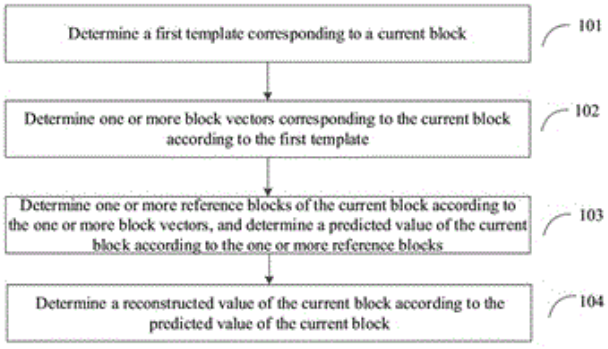

21: 2025/06520. 22: 2025/08/01. 43: 2026/09/04
51: H04N
71: GUANGDONG OPPO MOBILE TELECOMMUNICATIONS CORP., LTD.
72: ZHANG, LAI, WANG, FAN
54: DECODING METHOD, CODING METHOD, DECODERS, AND CODERS
00: -
Provided in the embodiments of the present application are a decoding method, an encoding method, a decoder, and an encoder. The decoding method comprises: determining at least one reference block of the current block based on an intra template matching prediction (IntraTMP) mode; determining a target prediction block of the current block based on the at least one reference block; and determining a reconstructed block of the current block based on a residual block of the current block and the target prediction block.

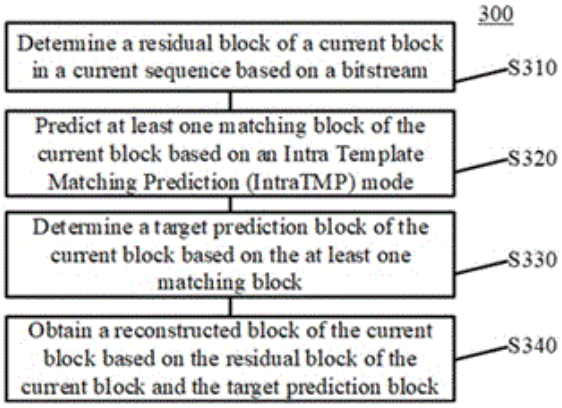

21: 2025/06523. 22: 2025/08/01. 43: 2026/09/04
51: H04N
71: GUANGDONG OPPO MOBILE TELECOMMUNICATIONS CORP., LTD.
72: XU, LUHANG
54: VIDEO DECODING METHOD, VIDEO ENCODING METHOD, DECODER, ENCODER AND COMPUTER-READABLE STORAGE MEDIUM
00: -
Provided in the embodiments of the present application are a video decoding method, a video encoding method, a decoder, an encoder and a computer-readable storage medium, which can improve the encoding and decoding performance. The video decoding method comprises: parsing a code stream, and determining a first intra-frame prediction identifier corresponding to the current block; determining prediction blocks on at least five locations that are adjacent to the current block; on the basis of prediction modes corresponding to the prediction blocks on the at least five locations,

determining M candidate prediction modes corresponding to the first intra-frame prediction identifier, wherein M is a positive integer; and constructing an intra-frame prediction mode list on the basis of the M candidate prediction modes, and performing intra-frame prediction and image reconstruction on the current block on the basis of the intra-frame prediction mode list, so as to determine a reconstructed image block corresponding to the current block.

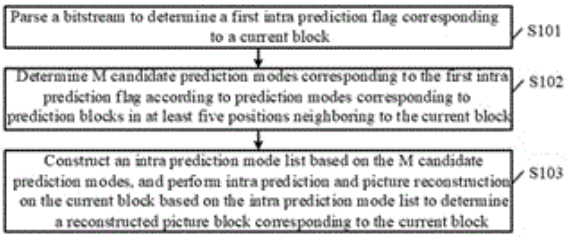

21: 2025/06579. 22: 2025/08/05. 43: 2026/09/04
51: C07D; A01N; A01P
71: SUMITOMO CHEMICAL COMPANY, LIMITED
72: MORI, TATSUYA
33: JP 31: 2023-024187 32: 2023-02-20
54: CYCLOPROPANECARBOXYLIC ACID ESTER COMPOUND AND USE THEREOF
00: -
The present invention provides a compound having excellent control efficacy against plant diseases. The compound, represented by formula (I), has excellent control efficacy against plant diseases.

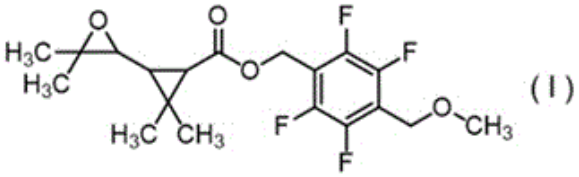

21: 2025/06580. 22: 2025/08/05. 43: 2026/09/04
51: C07C; A01N; A01P
71: SUMITOMO CHEMICAL COMPANY, LIMITED
72: KATAGIRI, YASUSHI
33: JP 31: 2023-024186 32: 2023-02-20
54: CYCLOPROPANECARBOXYLIC ACID ESTER COMPOUND AND USE THEREOF
00: -
The present invention provides a compound having excellent control efficacy against plant diseases. The compound, represented by formula (I), has excellent control efficacy against plant diseases.

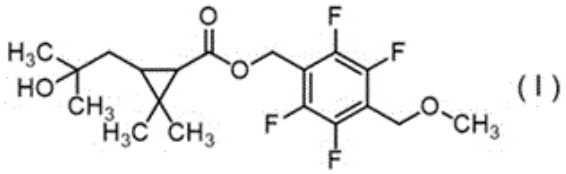

21: 2025/06581. 22: 2025/08/05. 43: 2026/09/04
51: B29D; B32B; D04H; E02B; E02D; B29K
71: HYPER FIBERS S.R.L.
72: BRUSA, NICOLA
33: IT 31: 102023000003453 32: 2023-02-27
54: REINFORCING COMPOSITE MATERIAL
00: -
Reinforcing composite material (100) comprising at least one sheet (10) made of a flexible material and a plurality of reinforcing composite strips (1). Each reinforcing composite strip (1) comprises: - a covering capsule (2) surrounding a plurality of longitudinal channels (3) developing parallel to a longitudinal development direction (X) of the composite reinforcing strip (1) and arranged in sequence between opposite side ends (1a) of said composite reinforcing strip (1), and - a plurality of longitudinal reinforcing fibres (3 a) arranged within the longitudinal channels (3). The reinforcing composite strips (1) are coupled to the sheet (10) at the respective lower surfaces (2b) of the covering capsules (2) so that their respective longitudinal development directions (X) are parallel. The sheet (10, 20) of flexible material comprises a 3D structure of thread-like elements defining between them a plurality of cavities (12, 22) suitable, in use, to be at least partially interpenetrated with the ground. The covering capsule (2) does not have on the upper surface (2a) any surface openings flowing into the longitudinal channels (3). The reinforcing composite material (100) does not comprise any further reinforcing composite strip developing along respective longitudinal development direction perpendicular to the longitudinal development direction (X) of the composite reinforcing strip (1).

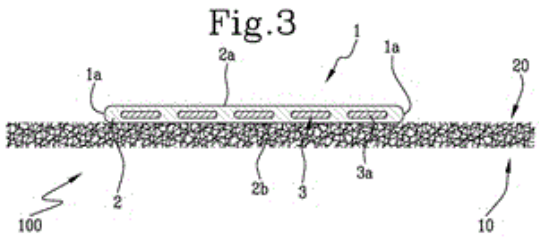

21: 2025/06615. 22: 2025/08/06. 43: 2026/09/04
51: B65D
71: THISCAP INC.
72: MAGUIRE, MICHAEL
33: EP 31: 23159480.5 32: 2023-03-01
54: CLOSURE FOR A CONTAINER
00: -
A closure (1; 1.1; 1.2) with an annular sidewall (6) comprising an annular skirt (10), a safety ring (8) as well as a first and a second tethers (12, 14) permanently connecting the annular skirt (10) to the safety ring (8) delineated by a first incision line (30) and a second incision line (50), which do not converge with one another. The annular skirt (8) is provided with inner threads or lugs (18) defining an unscrewing direction (LR) of rotation about a reference axis (A) defined by the safety ring (8). At least in the region of the tethers (12, 14), the orthogonal projections, in the direction of a reference axis, of the incision lines (30, 50) overlap and define the first and second tethers (12, 14) which extend in the unscrewing direction (LR) from a respective first connection area (12-1, 14-1) with the safety ring (8) to a respective second connection area (12-2, 14-2) with the annular skirt (10).

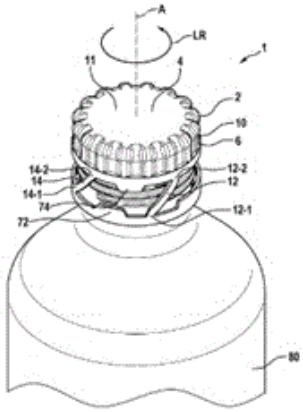

21: 2025/06638. 22: 2025/08/07. 43: 2026/09/04
51: C12N; A61K; A61P
71: ALNYLAM PHARMACEUTICALS, INC.
72: NOETZLI, LEILA, MCININCH, JAMES D, TREMBLAY, FREDERIC, SCHLEGEL, MARK K, CASTORENO, ADAM
33: US 31: 63/223,581 32: 2021-07-20
33: US 31: 63/154,005 32: 2021-02-26
33: US 31: 63/280,668 32: 2021-11-18
54: KETOHEXOKINASE (KHK) IRNA COMPOSITIONS AND METHODS OF USE THEREOF
00: -
The present invention relates to RNAi agents, e.g., dsRNA agents, targeting the ketohexokinase (KHK) gene. The invention also relates to methods of using such RNAi agents to inhibit expression of a KHK gene and to methods of treating or preventing a KHK-associated disorder in a subject.

21: 2025/06639. 22: 2025/08/07. 43: 2026/09/04
51: C12N; A61K; A61P
71: ALNYLAM PHARMACEUTICALS, INC.
72: CASTORENO, ADAM, GILBERT, JASON, KAITTANIS, CHARALAMBOS, MCININCH, JAMES D, MILSTEIN, STUART, SCHLEGEL, MARK K
33: US 31: 63/148,991 32: 2021-02-12
33: US 31: 63/270,176 32: 2021-10-21
54: SUPEROXIDE DISMUTASE 1 (SOD1) IRNA COMPOSITIONS AND METHODS OF USE THEREOF FOR TREATING OR PREVENTING SUPEROXIDE DISMUTASE 1- (SOD1-) ASSOCIATED NEURODEGENERATIVE DISEASES
00: -
The disclosure relates to double stranded ribonucleic acid (dsRNAi) agents and compositions targeting a SOD1 gene, as well as methods of inhibiting expression of a SOD1 gene and methods of treating subjects having a SOD1-associated neurodegenerative disease or disorder, e.g. Amyotrophic Lateral Sclerosis (ALS), Alzheimer's disease (AD), Parkinson's disease (PD) and Down's syndrome (DS), using such dsRNAi agents and compositions.

21: 2025/06650. 22: 2025/08/07. 43: 2026/09/04
51: B65B; B65G
71: UNITEC S.P.A.
72: BENEDETTI, LUCA
33: IT 31: 102023000002076 32: 2023-02-08
54: APPARATUS FOR CONVEYING AND PACKAGING FRUIT AND VEGETABLE PRODUCTS
00: -

An apparatus for conveying and packaging fruit and vegetable products (A), which comprises at least: - a first conveyance line (2), configured for the conveyance of containers (B), - a second conveyance line (4), facing the first line (2) and configured for the orderly conveyance of fruit and vegetable products (A) according to a predefined advancement direction (D) of those products (A), distributed according to first rows (E1) which are transverse with respect to the advancement direction (D) and are mutually parallel, - a transfer device (7), interposed between the lines (2, 4) and configured for the simultaneous pickup from the second line (4) of products (A) in the same first row (E1) and deposition in respective seats (F), which are provided in the containers (B) and are distributed along one or more mutually parallel second rows (E2). The device (7) comprises a main body (8), which rotates about an axis of rotation (G) that is parallel to the first rows (E1); the body (8) supports a plurality of units (10) for the pickup and deposition of respective products (A), said units being aligned along respective generatrices (H) of an ideal cylinder, which is coaxial to the axis of rotation (G); the units (10) are able to translate along the respective generatrix (H).

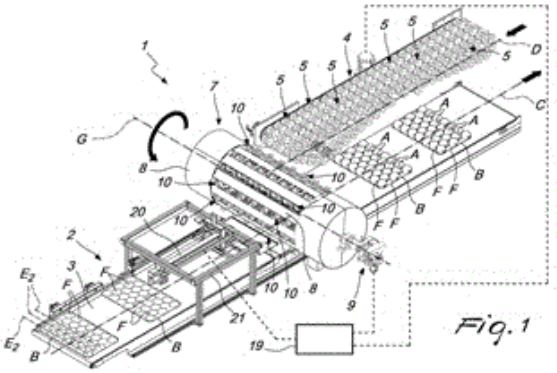

21: 2025/06652. 22: 2025/08/07. 43: 2026/11/06
51: A01K
71: NOMAD TACKLE PTY LTD
72: OLSEN, Damon
33: AU 31: 2022902937 32: 2022-10-07
54: SQUID LURE FOR FISHING
00: -
A squid lure having a body, the body comprising a rigid head and one or more flexible tentacles attached to the head; the head having a ventral side and a dorsal side with a tow point attached to the ventral side and a hook adapter attached to the dorsal side; the head having a weight located in the dorsal portion; wherein the head and the tentacles are shaped so that, when the lure is pulled through water, the body vibrates. The head and tentacles may be integrally formed.

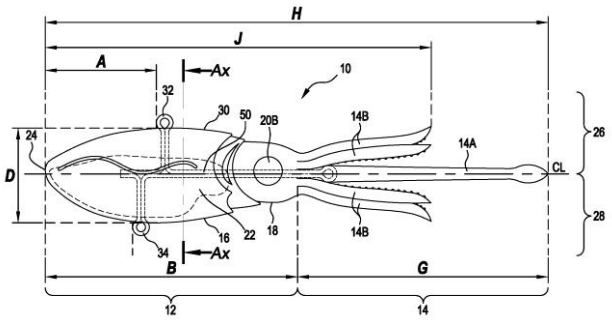

21: 2025/06665. 22: 2025/08/08. 43: 2026/09/04
51: A24B; A24F; A61M; B05B; B06B
71: SHAHEEN INNOVATIONS HOLDING LIMITED
72: LAHOUD, IMAD, ALSHAIBA SALEH GHANNAM ALMAZROUEI, MOHAMMED, BHATTI, SAJID, MACHOVEC, JEFF, LAMOUREUX, CLEMENT
33: US 31: 17/220,189 32: 2021-04-01
33: US 31: 17/122,025 32: 2020-12-15
54: MIST INHALER DEVICES
00: -
A mist generator device is disclosed for use with a driver device. The device features an elongate housing with an air inlet and mist outlet port, a liquid chamber for holding atomisable liquid, and a sonication chamber. A capillary element extends between the liquid chamber and sonication chamber. An ultrasonic transducer having a generally planar atomisation surface is provided within the sonication chamber. The transducer is configured to vibrate the atomisation surface to atomise the liquid to generate a mist comprising the atomised liquid and air within the sonication chamber. An airflow arrangement within the housing provides an air flow path between the air inlet port, the sonication chamber and the mist outlet port. Also included is an identification arrangement comprising a one-time programmable integrated circuit (OTP IC) with a memory storing a unique device identifier and a digital cryptographic authenticator core. An electrical connection provides an electronic interface enabling communication between the OTP IC and the driver device.

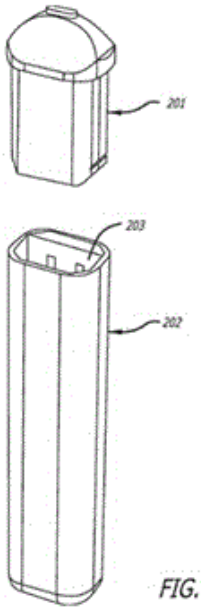

FIG. 10

21: 2025/06708. 22: 2025/08/11. 43: 2026/09/04
51: B01D
71: CATERPILLAR INC.
72: FINN, TIMOTHY S
33: US 31: 18/167,920 32: 2023-02-13
54: FILTER SYSTEM HAVING KEY-FIT ATTACHMENT BETWEEN HOLDER AND FILTER CONNECTOR
00: -
A filter system (10) for a machine system includes a filter holder assembly (26) having a filter holder (28), an inner filter connector (30), and an outer filter connector (32). The filter holder includes peripheral surfaces (48, 50) each configured with at least one thread section (52) and at least one slot section (54). The filter system also includes an inner filter (34) attached to the inner filter connector and an outer filter (36) attached to the outer filter connector. Each of the inner filter connector and the outer filter connector includes a peripheral surface (64, 72) configured with at least one thread section (66, 74) and at least one slot section (70, 78) arranged in a key-fit pattern relative to one of the peripheral surfaces of the filter holder. In an example application the concepts may be applied in an intake air system for an engine in an off-highway machine.

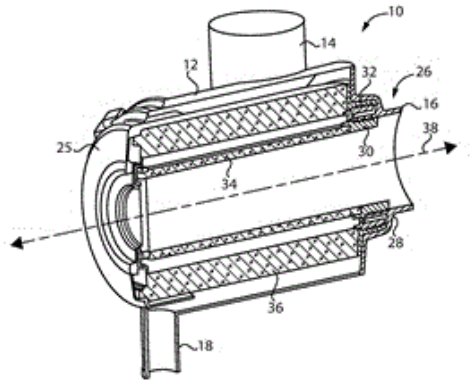

21: 2025/06714. 22: 2025/08/11. 43: 2026/09/04
51: C11D; A01N
71: UNILEVER GLOBAL IP LIMITED
72: REDDY, YUGANDHAR BOMMAIHPALLE SUDHAKAR, MAHAPATRA, SAMIRAN, MEDEPALLI, SRILAXMI VENKATA, VARMA, SANDEEP
33: EP 31: 23162789.4 32: 2023-03-20
54: A COMPOSITION FOR REDUCING URINE MALODOUR
00: -
The present invention relates to a composition that is used to reduce malodour originating from urine. Particularly, the present invention relates to a composition that reduces urine malodour by specifically targeting bacteria that have been identified as causing the malodour. This has been achieved by combining certain polysaccharides with bacteriophages that lyse the malodour causing bacteria.

21: 2025/06715. 22: 2025/08/11. 43: 2026/09/04
51: B65D
71: UNILEVER GLOBAL IP LIMITED
72: LALIER, GREGORY
33: US 31: 63/454,389 32: 2023-03-24
33: EP 31: 23172437.8 32: 2023-05-09
54: CLOSURE
00: -
A container comprising a closure, e.g., a bottle in combination with the closure. The closure includes an upper wall defining an opening and a cylindrical snap on pipe depending from the upper wall. The pipe includes threads designed to mate with threads on a neck of the bottle. The threads on the pipe and threads on the neck of the bottle pass over each other when the closure is snapped onto the bottle during manufacture. The pipe includes a resistance

recess and a guidance recess. The resistance recess and the guidance recess accommodate a forcing element on a neck of the bottle and permit unscrewing of the closure. The walls of the resistance recess are preferably symmetrical. The bottle neck contains a transfer ring to facilitate injection mold manufacturing.

21: 2025/06716. 22: 2025/08/11. 43: 2026/09/04
51: C11D; A01N
71: UNILEVER GLOBAL IP LIMITED
72: CAUNT, PHILIP, GHOSH, SOMNATH, MAHAPATRA, SAMIRAN, MEDEPALLI, SRILAXMI VENKATA, SAUNDERS, EMMA JANE, VARMA, SANDEEP, WILLIAMS, DEBORAH
33: EP 31: 23162760.5 32: 2023-03-20
54: A COMPOSITION FOR CLEANING SURFACES AND CONTROLLING INSECTS
00: -
The present invention relates to a composition that is used to clean surfaces while controlling insects. The composition may be used on hard surfaces in homes like those on utensils, furniture, floors, walls, toilets and on soft surfaces like clothes, upholstery, bedsheets and blankets. The use of the composition on such surfaces ensures long lasting cleaning and control of insects from being attracted to such surfaces for up to 24 hours after the surface is cleaned. This has been achieved through use of a cleaning composition comprising a Bacillus bacterial spore, select essential oil constituent and a surfactant.

21: 2025/06717. 22: 2025/08/11. 43: 2026/09/04
51: C11D; A01N; A01P
71: UNILEVER GLOBAL IP LIMITED
72: APPAVOO, SHANTHI, HALDER, ANINDITA, MAHAPATRA, SAMIRAN, TRIVEDI, VISHAL KUMAR
33: EP 31: 23170777.9 32: 2023-04-28
54: A SOLID DISINFECTION COMPOSITION
00: -
The present invention relates to a solid cleaning composition in tablet form that delivers antimicrobial efficacy against both gram positive and gram negative bacteria. The composition is useful in disinfection of hard surfaces like those in toilets, kitchen sink, and dish wash machines; as well as in disinfecting fabrics. This is achieved at low concentration of cationic surfactant the efficacy of which is boosted with amino acid based surfactant in a tablet comprising an effervescent system.

21: 2025/06734. 22: 2025/08/12. 43: 2026/09/04
51: A24B; A24F; A61M; B05B; B06B
71: SHAHEEN INNOVATIONS HOLDING LIMITED
72: LAHOUD, IMAD, ALSHAIBA SALEH GHANNAM ALMAZROUEI, MOHAMMED, BHATTI, SAJID, MACHOVEC, JEFF, LAMOUREUX, CLEMENT
33: US 31: 17/122,025 32: 2020-12-15
33: US 31: 17/220,189 32: 2021-04-01
54: A NICOTINE DELIVERY DEVICE
00: -
A mist generator device for use with a driver device. The device features an elongate housing with an air inlet port and a mist outlet port, containing a liquid chamber with a nicotine-containing solution, a sonication chamber, and a capillary element extending between the two chambers. An ultrasonic transducer with a generally planar atomization surface is positioned in the sonication chamber. The ultrasonic transducer is configured to vibrate the atomization surface to atomize the liquid. An airflow arrangement within the housing guides air from the inlet port, through the sonication chamber and out through the mist outlet port. The airflow is directed substantially perpendicular to the atomization surface as the flow passes into the sonication chamber.

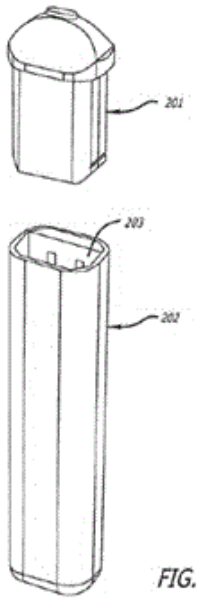

FIG. 10

21: 2025/06735. 22: 2025/08/12. 43: 2026/09/04

51: A24B; A24F; A61M; B05B; B06B;
71: SHAHEEN INNOVATIONS HOLDING LIMITED
72: LAHOUD, IMAD, ALSHAIBA SALEH GHANNAM ALMAZROUEI, MOHAMMED, BHATTI, SAJID, MACHOVEC, JEFF, LAMOUREUX, CLEMENT
33: US 31: 17/122,025 32: 2020-12-15
33: GB 31: 2104872.3 32: 2021-04-06
33: US 31: 17/220,189 32: 2021-04-01

54: A HOOKAH DEVICE

00: -

A hookah device for use with a hookah having an elongate stem and a water chamber with a first end of the stem attached to the water chamber. The hookah device comprises a plurality of ultrasonic mist generator devices which are each provided with a respective mist outlet port, and a driver device which is connected electrically to each of the mist generator devices and configured to activate the mist generator devices. The driver device comprises a wireless communication system configured to transmit and receive data between the driver device and a computing device such that the computing device can control the operation of the hookah device. The hookah device further comprises a hookah attachment arrangement which is configured to attach the hookah device to a second end of the stem of the hookah. The hookah attachment arrangement has a hookah outlet port which provides a fluid flow path from the mist outlet ports of the mist generator devices and out of the hookah device such that, when at least one of the mist generator devices is activated by the driver device, mist generated by each activated mist generator device flows along the fluid flow path and out of the hookah device to the hookah.

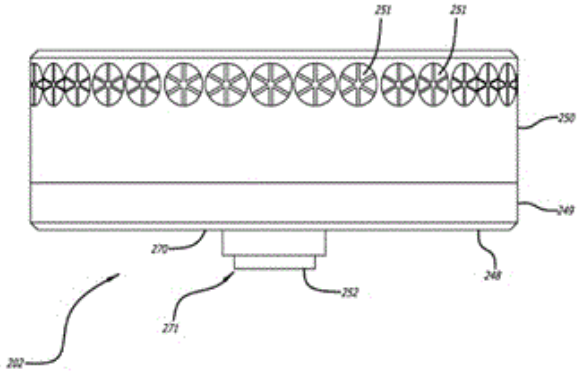

21: 2025/06763. 22: 2025/08/13. 43: 2026/09/09
51: C08J
71: EVONIK OPERATIONS GMBH
72: ZANDER, Christian, RICHTER, Thomas
33: EP 31: 23152837.3 32: 2023-01-23

54: PROCESS FOR DEPOLYMERIZATION OF POLYALKYLENE TEREPHTHALATES IN AN EXTRUDER

00: -

The invention relates to a process for depolymerization of at least one polymer (P1) which is a polyalkylene terephthalate, i.e. a polymer comprising terephthalic acid units and alkylene glycol units, in particular polyethylene terephthalate (PET) or polybutylene terephthalate (PBT). The process is particularly suitable for depolymerization and for recycling of PET-containing wastes. The process is performed in an extruder (E) having at least two barrels (G1, G2), wherein the at least one polymer (P1) is provided in the barrel (G1) in the form of a suspension (S1) in a polyolefin (PO), for example polyethylene (PE) or polypropylene (PP). The suspension (S1) is then transported into the barrel (G2). At least one glycol compound (G), preferably ethylene glycol, and at least one alkali metal alkoxide are introduced into the barrel (G2) and mixed with the suspension (S1). The at least one glycol compound (G) reacts in suspension (S1) with the at least one polymer (P1) to afford a mixture (MG2) comprising the corresponding cleavage products (P2). The resulting mixture (MG2) is transported to the product outlet (EX) of the extruder (E) and withdrawn there. The process allows for a safer process mode since it avoids the uncontrolled increase in temperature and pressure during depolymerization of the polymer (P1.S).

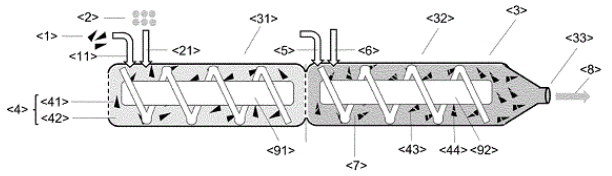

21: 2025/06764. 22: 2025/08/13. 43: 2026/09/09
51: C08J
71: EVONIK OPERATIONS GMBH
72: ZANDER, Christian, REINSBERG, Philip, Heinrich, RUWWE, Johannes, BLUM, Adrian
33: EP 31: 23152835.7 32: 2023-01-23

54: PROCESS FOR DEPOLYMERIZING POLYALKYLENE TEREPHTHALATES IN MIXTURES WITH LOWER-MELTING POLYOLEFINS

00: -
The invention relates to a process for depolymerizing at least one polymer P1 in polymer mixtures comprising, as well as the at least one polymer P1, also at least one polyolefin PO that has a lower melting point than P1 and is especially a polyethylene PE or polypropylene PP. The polymer P1 is a polyalkylene terephthalate i.e. a polymer comprising terephthalic acid units and alkylene glycol units, in particular polyethylene terephthalate PET or polybutylene terephthalate PBT. The process according to the invention comprises two steps, wherein the polymer P1 is reacted in the first step with a glycol compound G essentially to give cleavage products P2 having shorter chain lengths than P1. In the second step, the cleavage products P2 and any polymers P1 unconverted in the first step are reacted with additionally added glycol compound G and at least partly split into the monomer units. The first step is conducted above and the second step below the melting temperature TPO of the polyolefin PO. This enables simple and efficient separation of the solid polyolefin PO from the mixture obtained after the second step has ended.

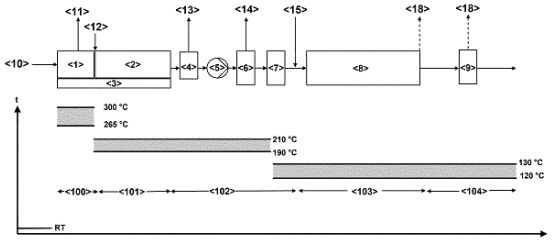

21: 2025/06765. 22: 2025/08/13. 43: 2026/09/09
51: C08J
71: EVONIK OPERATIONS GMBH
72: ROETTGER, Dirk, ZANDER, Christian, REINSBERG, Philip, Heinrich, RUWWE, Johannes, RICHTER, Thomas
33: EP 31: 23152836.5 32: 2023-01-23

54: PROCESS FOR DEPOLYMERIZATION OF POLYALKYLENE TEREPHTHALATES IN AN EXTRUDER

00: -
The invention relates to an improved process for depolymerization of at least one polymer P1 which is a polyalkylene terephthalate, i.e. a polymer comprising terephthalic acid units and alkylene glycol units, in particular polyethylene terephthalate PET or polybutylene terephthalate PBT. The process is particularly suitable for depolymerization and for recycling of PET-containing wastes. The process is performed in an extruder E having at least two barrels G1, G2, wherein the at least one polymer P1 is provided in barrel G1 as suspension S1. The suspension S1 is then transported into the barrel G2 and there at least one glycol compound G, preferably ethylene glycol, is added to the suspension S1. The at least one glycol compound G reacts in the suspension S1 with the at least one polymer P1 to afford a mixture MG2 comprising the corresponding cleavage products P2. The resulting mixture MG2 is transported to the product outlet EX of the extruder E. At the product outlet EX a portion of MG2 is withdrawn and utilized as the continuous phase PKon of the suspension S1 provided in G1. The process allows for a safer process mode since it avoids the uncontrolled increase in temperature and pressure during depolymerization of the polymer P1.

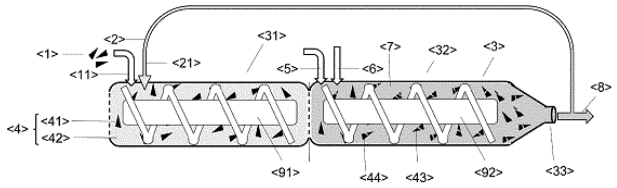

21: 2025/06769. 22: 2025/08/13. 43: 2026/09/04
51: A21D; A01G; A23B; A23L; C09J
71: LIVA BIO PROTECTION TECHNOLOGIES LTD
72: HAMMER, IFAT
33: US 31: 63/439,361 32: 2023-01-17

54: A BIO-PRESERVATION STICKER, METHODS OF PRODUCING THE SAME AND USES THEREOF

00: -
A sticker comprising at least one adhesive component comprising a carrier composition holding a nutrient composition; wherein said carrier composition comprises a food grade binder and said nutrient composition comprises at least one compound suitable for supporting selective growth of one or more human safe bacterium.

21: 2025/06833. 22: 2025/08/15. 43: 2026/09/04
51: C07K; A61K; A61P
71: ADAGENE INC.
72: LUO, PETER PEIZHI, DU, FANGYONG, PAN, ZHONGZONG, LIU, GUIZHONG

33: CN 31: PCT/CN2018/075064 32: 2018-02-02
54: ANTI-CTLA4 ANTIBODIES AND METHODS OF MAKING AND USING THE SAME
00: -
Provided herein are cross-reactive antibodies (or antigen binding fragments thereof) that bind to human CTLA4, activatable antibodies that bind to human CTLA4, nucleic acid molecules encoding the same, pharmaceutical compositions thereof, and methods of their therapeutic use (e.g., for treatment of cancer).

21: 2025/06847. 22: 2025/08/15. 43: 2026/09/21
51: H04W
71: ZTE CORPORATION
72: ZHANG, Chenchen, XUE, Fei, ZHOU, Wubin, LIU, Jing
33: CN 31: 202310154032.6 32: 2023-02-17
54: COMMUNICATION METHOD AND DEVICE AND STORAGE MEDIUM
00: -
Provided are a communication method and a communication apparatus, and a storage medium. The communication method includes: determining timing information of a first carrier based on timing information related to a second carrier, where the second carrier is a carrier that has been activated, and the first carrier is a carrier that is not activated, a carrier to be activated, or a carrier with a physical cell identifier (PCI) different from a PCI of the second carrier.

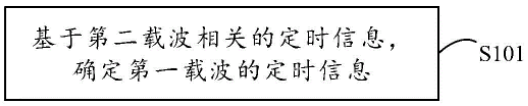

图 3

S101 Determine timing information of a first carrier on the basis of timing information about a second carrier

---

21: 2025/06849. 22: 2025/08/15. 43: 2026/09/10
51: E04H; B64B; B64F
71: MARTINSCHLEDDE, Werner
72: MARTINSCHLEDDE, Werner
33: DE 31: 10 2023 100 916.8 32: 2023-01-16
54: CAPTIVE BALLOON SUPPORT STRUCTURE ASSEMBLY
00: -
The invention relates to a captive balloon support structure assembly (1) comprising a captive balloon which is filled with a lifting gas having a lower density than the ambient air and is kept floating at a specific altitude above the ground (8), wherein a three-dimensional wide-meshed supporting net (3) that is tethered to the ground (8) is placed over the captive balloon (2).

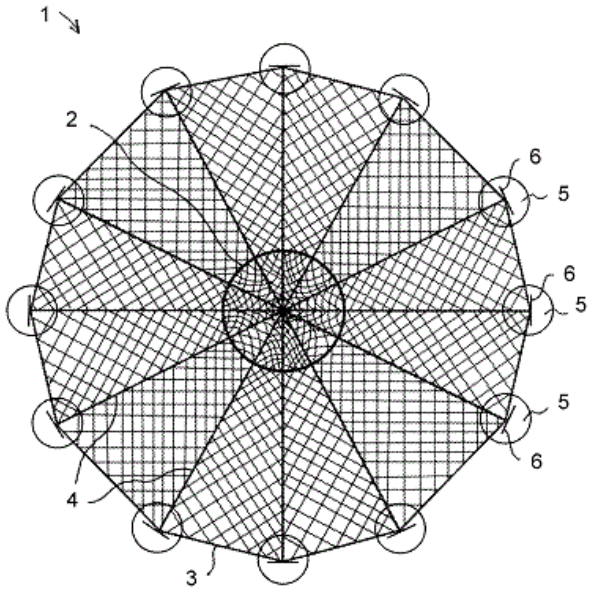

21: 2025/06854. 22: 2025/08/15. 43: 2026/09/04
51: C07J
71: INDUSTRIALE CHIMICA S.R.L.
72: LENNA, ROBERTO, BALDRIGHI, MICHELE, MOSCHENI, DANIELE
54: PROCESS FOR PREPARING (15ALPHA,16ALPHA,17BETA)-ESTRA-1,3,5(10)-TRIENE-3,15,16,17-TETROL (ESTETROL) MONOHYDRATE
00: -
The present invention relates to a process for preparing (15α,16α,17β)-estra-1,3,5(10)-triene-3,15,16,17-tetrol monohydrate, also known as Estetrol monohydrate, having formula (I).

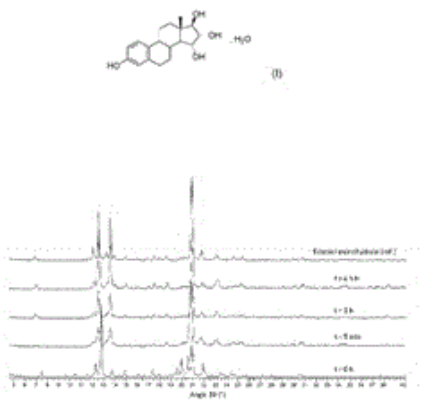

21: 2025/06874. 22: 2025/08/18. 43: 2026/09/04
51: G06Q; B60L; G01N; G08B
71: CATERPILLAR INC.
72: BRAUNSTEIN, MICHAEL D
33: US 31: 17/741,212 32: 2022-05-10
54: MONITORING INTEGRITY OF CHARGING RAIL SYSTEM
00: -
Machines can operate based on electricity received from a charging rail system installed along a route at a worksite. A map of the charging rail system can be displayed via a user interface. An integrity status of at least one component of the charging rail system can be determined based at least in part on a position of the at least one component indicated by an image of the at least one component. An indication of the integrity status of the at least one component can be presented, via the user interface, in association with the map.

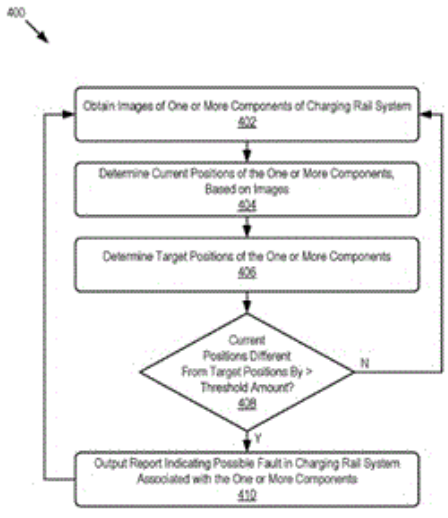

21: 2025/06917. 22: 2025/08/19. 43: 2026/09/10
51: A61K; A61P
71: KORTUC JAPAN LLC
72: SUDA, HIROYUKI, TOGASHI, YOSUKE
33: JP 31: 2023-023847 32: 2023-02-17
54: PHARMACEUTICAL COMPOSITION AND METHOD FOR ACTIVATING IMMUNITY AGAINST TUMOR
00: -
No method for treatment of distant tumor has been reported. A purpose of the present invention is to provide a pharmaceutical composition that is used in conjunction with radiotherapy to activate immunity against tumor, and that comprises a hydrogen peroxide solution. Another purpose of the present invention is to provide a method for activating immunity against tumor, the method comprising: a step for providing the pharmaceutical composition; a step for administering the pharmaceutical composition to a target site of a patient having the tumor; and a step for irradiating the target site with radiation. The tumor is distant from the target site of the patient having the tumor.

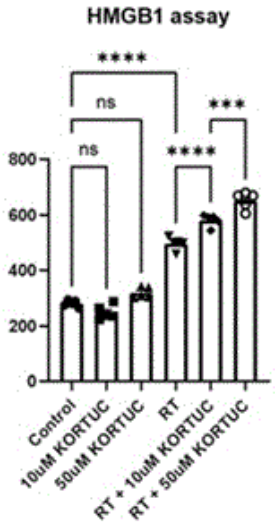

21: 2025/06918. 22: 2025/08/19. 43: 2026/09/04
51: C02F; B01D; C08F; C08L
71: KURITA WATER INDUSTRIES LTD.
72: OSHIBA, YUHEI, HAYAKAWA, KUNIHIRO
33: JP 31: 2023-038665 32: 2023-03-13
54: SCALE INHIBITOR AND SCALE INHIBITING METHOD FOR REVERSE OSMOSIS MEMBRANE
00: -
This scale inhibitor inhibits precipitation of scales during a reverse osmosis process, the scale inhibitor comprising a copolymer A and a copolymer B,

wherein: the copolymer A has a constituent unit (i) derived from acrylic acid and a constituent unit (ii) derived from 2-acrylamido-2-methylpropanesulfonic acid; the molar ratio between the constituent unit (i) and the constituent unit (ii) in the copolymer A is 95:5 to 99:1; the weight average molecular weight of the copolymer A is 2000 or more and less than 10000; the copolymer B has a constituent unit (i) derived from acrylic acid and a constituent unit (ii) derived from 2-acrylamido-2-methylpropanesulfonic acid; the molar ratio between the constituent unit (i) and the constituent unit (ii) in the copolymer B is 80:20 to 90:10; the weight average molecular weight of the copolymer B exceeds 5000 and is less than 10000; the blending ratio A:B by mass between the copolymer A and the copolymer B is 3:1 to 6:1; and the scale inhibitor includes substantially no phosphorus-containing compound.

21: 2025/06921. 22: 2025/08/19. 43: 2026/09/04
51: H04W
71: ZTE CORPORATION
72: LI, WENTING, LIU, JING, HUANG, HE, NIU, LI
54: METHODS, DEVICES, AND SYSTEMS FOR CAPABILITY COORDINATION IN DUAL-CONNECTION
00: -
The present disclosure describes methods, systems, and devices for user equipment (UE) capability coordination in dual-connection (DC). One method includes sending, by a user equipment (UE) to a first network, a UE assistance information comprising UE temporary capability restriction, the UE capability restriction indicating one or more restriction dimensions to the first network. Another method includes receiving, by a first network from a UE, a UE assistance information comprising UE temporary capability restriction, the UE capability restriction indicating one or more restriction dimensions to the first network.

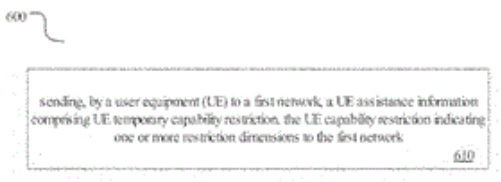

21: 2025/06957. 22: 2025/08/20. 43: 2026/09/09
51: A61K; A61P
71: HANMI PHARM. CO., LTD.
72: KIM, Jin Young, PARK, Jun Sub, CHOI, Jae Hyuk, JEONG, Seong Ju, HEO, Yong Ho, PARK, Da Hyeon, LEE, Jong Soo, LEE, A Ram
33: KR 31: 10-2023-0029834 32: 2023-03-07
54: COMBINATION THERAPY OF INTERLEUKIN-2 (IL-2) ANALOG OR CONJUGATE THEREOF AND IMMUNE CHECKPOINT INHIBITOR FOR PREVENTING OR TREATING CANCER
00: -
The present invention relates to the combined use of an interleukin-2 analog or a conjugate thereof and an immune checkpoint inhibitor for the prevention or treatment of cancer, and a pharmaceutical composition comprising the same.

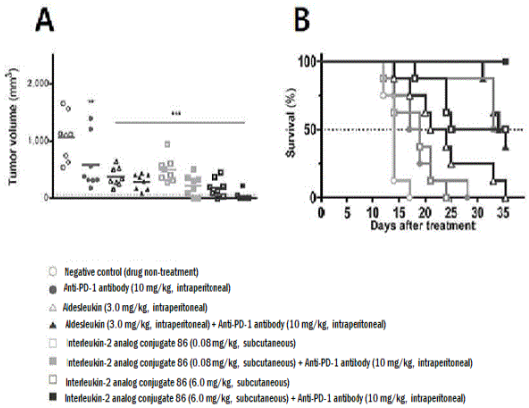

21: 2025/06958. 22: 2025/08/20. 43: 2026/09/10
51: A61K; A61P
71: EYEBIOKOREA, INC.
72: CHO, Yun Seok, AHN, Byul Nim, LEE, Yu Jin
33: KR 31: 10-2023-0025972 32: 2023-02-27
54: COMPOSITION FOR TREATING DIABETIC RETINOPATHY, COMPRISING PEPTIDE
00: -
The present invention relates to a composition for preventing or treating diabetic retinopathy, comprising a peptide, wherein the peptide exhibits excellent inhibition with respect to vasodilation, loss of pericytes, and generation of neovascularity in the retina, and thus can be effectively used for preventing or treating retinopathy by inhibiting an increase in vascular permeability, inflammation, and the occurrence of neovascularity.

21: 2025/06960. 22: 2025/08/20. 43: 2026/09/10
51: A61K; A61P
71: HANMI PHARM. CO., LTD.

72: KIM, Jin Young, PARK, Jun Sub, CHOI, Jae Hyuk, KIM, Yu Yon, HEO, Yong Ho, PARK, Da Hyeon, KIM, Min Young, LEE, A Ram
33: KR 31: 10-2023-0029833 32: 2023-03-07
54: PHARMACEUTICAL COMPOSITION COMPRISING INTERLEUKIN-2 (IL-2) ANALOG OR CONJUGATE THEREOF FOR PREVENTING OR TREATING CANCER
00: -
The present invention relates to a pharmaceutical composition for preventing or treating cancer, including an Interleukin 2 analog or a conjugate thereof.

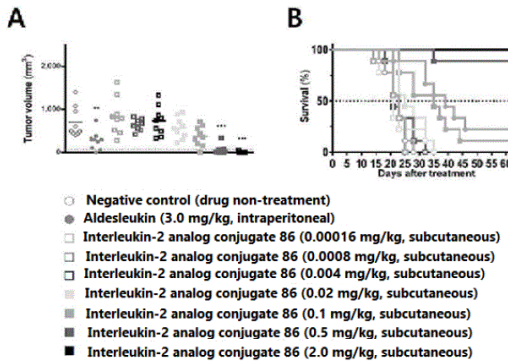

21: 2025/06963. 22: 2025/08/20. 43: 2026/09/04
51: C22C; B21B; C21D
71: JFE STEEL CORPORATION
72: MATSUI, YOICHIRO, SUMIDA, EISUKE, KIMURA, HIDEYUKI
33: JP 31: 2023-051514 32: 2023-03-28
54: HOT-ROLLED STEEL SHEET AND METHOD FOR PRODUCING SAME
00: -
The purpose of the present invention is to provide: a hot-rolled steel sheet having excellent scale adhesion properties, especially flaky peeling resistance properties, even if the hot-rolled steel sheet has a larger sheet thickness; and a method for producing the same. This hot-rolled steel sheet has a prescribed component composition and scale on the surface thereof, the scale having an average thickness of 20 μm or less. The scale has a structure that includes, in area ratio, at least 20% of magnetite, at least 40% of iron and magnetite eutectoid transformation structures, not more than 15% of wustite, and a total of at least 90% (including 100%) of magnetite, wustite, and iron and magnetite eutectoid transformation structures. The area percentage of precipitated Fe in a region from the most superficial layer of scale to 1/2 of the scale thickness in the thickness direction is at least 2%.

21: 2025/06964. 22: 2025/08/20. 43: 2026/09/04
51: C22C; B21B; C21D
71: JFE STEEL CORPORATION
72: MATSUI, YOICHIRO, SUMIDA, EISUKE, KIMURA, HIDEYUKI
33: JP 31: 2023-051515 32: 2023-03-28
54: HOT-ROLLED STEEL SHEET AND METHOD FOR PRODUCING SAME
00: -
The purpose of the present invention is to provide: a hot-rolled steel sheet having excellent scale adhesion properties, especially flaky peeling resistance properties, even if the hot-rolled steel sheet has a larger sheet thickness; and a method for producing the same. This hot-rolled steel sheet has a prescribed component composition, and scale on the surface thereof, the scale having an average thickness of 25 μm or less. The scale has a structure that includes, in area ratio, at least 20% of magnetite, at least 30% of iron and magnetite eutectoid transformation structures, not more than 15% of wüstite, and a total of at least 90% (including 100%) of magnetite, wüstite, and iron and magnetite eutectoid transformation structures. The arithmetic average roughness of the interface between the scale and ground iron is at least 0.3 μm.

21: 2025/06966. 22: 2025/08/20. 43: 2026/09/04
51: B07C
71: TOMRA SORTING GMBH
72: BALTHASAR, DIRK, ALTHAUS, MALTE
33: EP 31: 23160971.0 32: 2023-03-09
54: OBJECT HANDLING SYSTEM, INDUSTRIAL FACILITY COMPRISING AN OBJECT HANDLING SYSTEM, METHOD FOR MAINTAINING AN OBJECT HANDLING SYSTEM AND METHOD FOR ASSEMBLING AN OBJECT HANDLING SYSTEM
00: -
An object handling system (100) for handling objects (111) transported by a conveyor belt (110) in a transportation direction (T) comprises an inspection unit assembly (120) of one inspection units (121, 122) and a frame (160) arranged across the conveyor belt. The frame comprises a maintenance bridge (161), extending across a width of the conveyor belt. The inspection unit assembly is positioned above the conveyor belt and rotatably

attached to the frame by an inspection unit connector (140). The inspection unit connector is configured to allow a rotation of the inspection unit assembly around an axis of rotation. Thereby an inspection opening (123) of the inspection units are rotatable from an inspection operation position facing the conveyor belt to a first maintenance position facing a space above the maintenance bridge. An industrial facility, a method for maintaining and a method for assembling an object handling system is also disclosed.

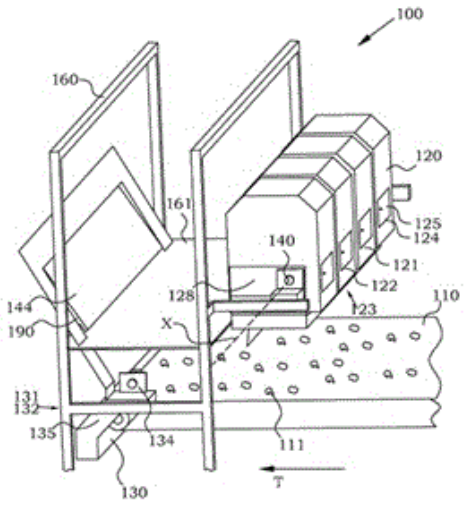

21: 2025/06968. 22: 2025/08/20. 43: 2026/09/04
51: C01B; C01F
71: HYDROGENR8 LIMITED
72: MOORE, MARTIN, ANDERSON, JOHN
33: GB 31: 2302435.9 32: 2023-02-21
54: METHOD FOR THE GENERATION OF HYDROGEN
00: -
A process for the reaction of aluminium with water comprising the steps of adding aluminium metal to an aqueous solution comprising potassium hydroxide at a concentration of between 0.1M and 0.4M and a surfactant; agitating the mixture of previous step; and collecting generated hydrogen. A composition for use in such a process for reacting aluminium with water, comprising potassium hydroxide and a surfactant.

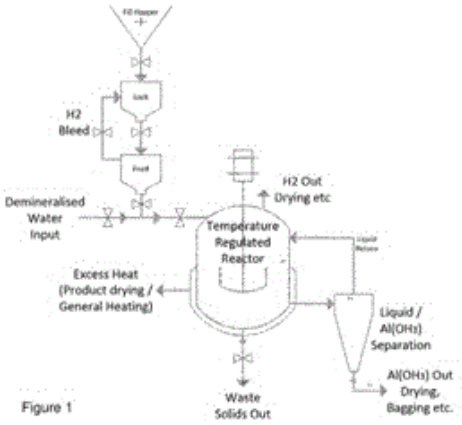

Figure 1

21: 2025/06969. 22: 2025/08/20. 43: 2026/09/04
51: F27B; F27D
71: FOSECO INTERNATIONAL LIMITED
72: KUCMAN, KEVIN, SMITH, DAVID C
33: US 31: 63/451,967 32: 2023-03-14
54: CHANNEL INDUCTION FURNACE
00: -
The present invention relates to a channel induction furnace, a refractory enclosure to be used in a channel induction furnace, and a process for renewing a lining in a channel induction furnace. The channel induction furnace and the refractory enclosure are asymmetrical: their front side differs from their rear side. The refractory enclosure comprises one or more tubular sections made of a single piece of refractory material produced outside the channel induction furnace.

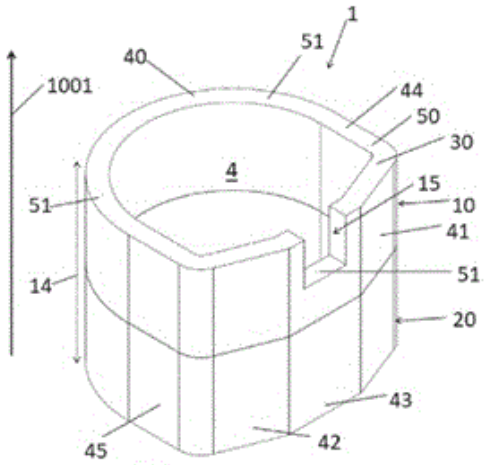

21: 2025/07010. 22: 2025/08/21. 43: 2026/09/04
51: C01B; B01J; C25B
71: ARKEMA FRANCE

72: LUTZ, CÉCILE, RAVON, UGO, LASCOUMETTES, JEAN-ROBERT
33: FR 31: FR2301830 32: 2023-02-28
54: PURIFICATION OF ELECTROLYTIC HYDROGEN
00: -
The present invention relates to a method for purifying a hydrogen stream polluted by water, oxygen and optionally nitrogen, said method comprising bringing the hydrogen stream to be purified into contact with a zeolite adsorbent material comprising at least one metal chosen from the metals from columns 3 to 12 of the periodic table of the elements, in zero-valent metal form, or in oxidized form or in reduced form, and recovering a purified hydrogen stream. The invention also relates to the use of a zeolite adsorbent material comprising at least one metal from columns 3 to 12 of the periodic table of the elements for the purification of hydrogen, and to the use of hydrogen thus purified in industrial processes.

21: 2025/07011. 22: 2025/08/21. 43: 2026/09/04
51: C01B; C25B
71: ARKEMA FRANCE
72: LUTZ, CÉCILE, RAVON, UGO, LASCOUMETTES, JEAN-ROBERT
33: FR 31: FR2301831 32: 2023-02-28
54: PURIFICATION OF ELECTROLYTIC OXYGEN
00: -
The present invention relates to a method for purifying an oxygen stream polluted by water, hydrogen and potentially nitrogen, said method comprising bringing the oxygen stream to be purified into contact with a zeolitic adsorbent material comprising at least one metal, in zero-valent metal form, or in oxidized form or in reduced form, and recovering purified oxygen streams. The invention also relates to the use of a zeolitic adsorbent material comprising at least one transition metal for the purification of oxygen, and to the use in industrial processes of oxygen thus purified.

21: 2025/07012. 22: 2025/08/21. 43: 2026/09/04
51: B43K; A45D
71: STAEDTLER SE
72: THIES, ANDREAS, JAKOB, MARTIN, HERBOLSHEIMER, JOHANNES
33: DE 31: 10 2023 111 014.4 32: 2023-04-28
54: PENCIL, SHAFT AND PROCESS FOR PRODUCTION THEREOF
00: -
Pencil (1) having a shaft (3), wherein the shaft (3) comprises a shaft base material having a base formulation, wherein the base formulation comprises 50% to 80% by weight of PLA, PLA copolymer and/or PLA blend, 20% to 50% by weight of further polymers, plasticizers, waxes/lubricants, further additives such as adhesion promoters, stabilizers etc., colorants, in particular pigments, organic and/or inorganic fillers as shaft fillers, wherein the shaft base material is foamed and/or comprises pores.



21: 2025/07015. 22: 2025/08/21. 43: 2026/09/04
51: A61K; A61P; C07C
71: SPRINGWORKS THERAPEUTICS, INC.
72: RUGGIERO, PIERO L, PATTERSON, KRISTIN, HATCHER, MARK, LIU, JIPING, ILOEJE, UCHENNA H, LANGSETH, ABRAHAM J
33: US 31: 63/490,626 32: 2023-03-16
54: DOSAGE FORMS OF MIRDAMETINIB
00: -
The present disclosure relates to an oral dosage form, such as a capsule, comprising (a) mirdametinib having a d90 no more than 250 microns, a d50 no more than 50 microns, or both, and (b) one or more pharmaceutically acceptable excipients. These dosage forms are useful in the treatment of tumors and cancers, such as plexiform neurofibromas (PN), plexiform neurofibromas associated with neurofibromatosis type 1 (NF1-PN), high grade glioma (HGG), low grade ovarian cancer, Langerhans cell histiocytosis (LCH), brain cancer, and a cancer that has metastasized to a patient's brain. The disclosure also related to improved dosage regimens for mirdametinib treatments.

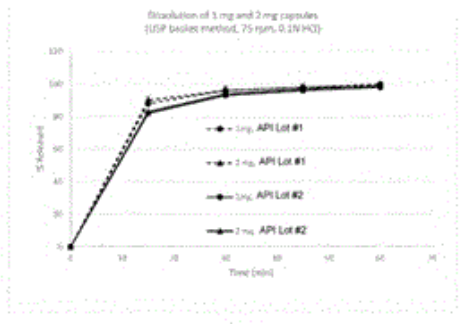

21: 2025/07041. 22: 2025/08/22. 43: 2026/09/04
51: C22B; H01M
71: UMICORE
72: TANSKANEN, PEKKA ANTERO, LAINE, PETTERI HEIKKI SAMULI, LASSI, ULLA MARIANNE, CALLEBAUT, WILLEM, VERHEES, PIETER
33: EP 31: 23163519.4 32: 2023-03-22
54: LITHIUM RECOVERY FROM SLAGS
00: -
Li-bearing slags are typically produced when Li-batteries or their waste are recycled on a smelter. The Li recovery process comprises the steps of: - powdering the metallurgical slag to a particle size distribution having a D50 of less than 100 µm; - contacting, in an aqueous medium, the Li-containing metallurgical slag, and an alkaline Ca-compound, provided in amounts selected to obtain a molar ratio of the Ca in the Ca-compound to Li in the slag of at least 0.75, thereby obtaining a suspension; - heating the suspension to a temperature of more than 80 °C for at least 30 min, thereby obtaining a leached suspension; and, - separating solids from liquids in the leached suspension, thereby obtaining a leach solution containing a major part of the Li, and a solid residue containing Ca. This alkaline leaching process allows for a straightforward recovery of battery-grade LiOH from the leach solution, while consuming less reagents than known acidic leaching processes.

21: 2025/07042. 22: 2025/08/22. 43: 2026/09/04
51: B02C
71: MAGOTTEAUX INTERNATIONAL S.A.
72: BRUEL, GUILLAUME, CLERMONT, BENOÎT
33: EP 31: 23168749.2 32: 2023-04-19
54: ONE-PIECE COMPOSITE GRINDING ROLLER
00: -
The present invention relates to a one-piece grinding roller (1) for vertical-axis grinders produced by casting in a metal mould in a foundry, the roller comprising, on its periphery, a perforated reinforcing structure (2) consisting of a plurality of ceramic inserts contiguously joined together, the contiguous assembly of the ceramic reinforcements being carried out along wavy lines.



21: 2025/07072. 22: 2025/08/25. 43: 2026/09/04
51: C07K; A61K; A61P; C12N
71: WESTVAC BIOPHARMA CO., LTD.
72: LI, JIONG, HUANG, NONGYU, WEI, YUQUAN
33: CN 31: 202310228339.6 32: 2023-03-10
54: ANTI-ACNE RECOMBINANT PROTEIN VACCINE, PREPARATION METHOD THEREFOR AND APPLICATION THEREOF
00: -
The present invention belongs to the technical field of biomedicine, and in particular, to an anti-acne recombinant protein vaccine, a preparation method therefor, and an application thereof. In order to solve a problem that there is still a lack of effective drugs for preventing and treating acne diseases, the present invention provides a recombinant protein vaccine targeting a cutibacterium acnes CAMP virulence factor. The recombinant protein vaccine neutralizes the CAMP virulence factor by inducing immune responses such as production of antibodies in vivo and inhibits cutaneous inflammation response induced by cutibacterium acnes, thereby implementing the effects of preventing and treating acne.

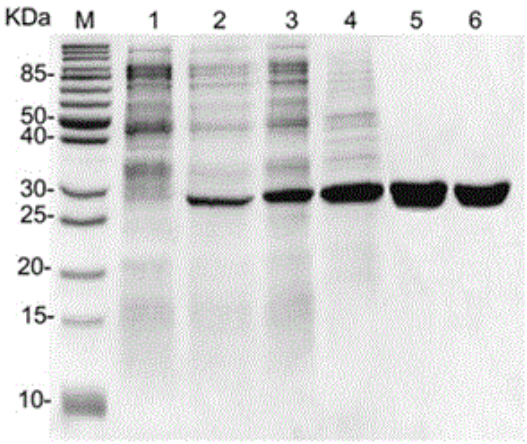

21: 2025/07124. 22: 2025/08/26. 43: 2026/09/04
51: A61K; A61P
71: ZERIA PHARMACEUTICAL CO., LTD
72: OKUBO, TAKANORI, MIYAGAWA, TOMOHARU, NAGAHAMA, KENJI
33: JP 31: 2023-040926 32: 2023-03-15
54: URINATION DISORDER-ALLEVIATING AGENT
00: -
An object of the present invention is to develop a urination disorder-alleviating agent which has a sufficient urination disorder improving effect and can be administered chronically. The present invention relates to a urination disorder-alleviating agent comprising acotiamide or a salt thereof as an active ingredient, wherein the acotiamide or a salt thereof is orally administered in an amount of 200 to 300 mg per administration for a total of 600 to 900 mg per day to an adult.

21: 2025/07130. 22: 2025/08/26. 43: 2026/09/04
51: C11D
71: UNILEVER GLOBAL IP LIMITED
72: DAS, ISHITA, KIZHAKE VEETIL, SREEJESH, MAHAPATRA, SAMIRAN, MOHAPATRA, NAMISHA, MEDEPALLI, SRILAXMI VENKATA, REDDY, YUGANDHAR BOMMAIHPALLE SUDHAKAR, SADAGOPAN, SRIPRADHA, SAMPATH KUMAR, RAMYA, VARMA, SANDEEP
33: EP 31: 23169600.6 32: 2023-04-24
54: A SOLID LAUNDRY COMPOSITION
00: -
The present invention relates to a solid laundry composition for reducing malodour. Particularly, the present invention relates to a solid laundry detergent composition; that ensures that the fabric surface remains fresh and free of malodours. This is ensured by using a composition comprising a surfactant, select polysaccharide and a hydrotrope.

21: 2025/07164. 22: 2025/08/27. 43: 2026/09/09
51: A23K; B01J; C12P
71: EVONIK OPERATIONS GMBH
72: BLÜMKE, Wilfried, HEINING, Martin, MERZ, Juliane, OELMANN, Ansgar, MAYER, Alexander
33: EP 31: 23155152.4 32: 2023-02-06
54: PROCESS FOR PREPARING GUANIDINOACETIC ACID COMPRISING GRANULATES
00: -
The present application relates to a process for preparing guanidinoacetic acid comprising granulates, comprising the steps of a) providing a fermentation broth comprising guanidinoacetic acid and biomass, b) reducing the content of water in the fermentation broth provided in step a) to give a concentrated fermentation broth, and c) subjecting the concentrated fermentation broth of step b) to a wet granulation.

21: 2025/07168. 22: 2025/08/27. 43: 2026/09/09
51: A61K; A61P
71: ONCONIC THERAPEUTICS INC., JEIL PHARMACEUTICAL CO., LTD.
72: LEE, Sibeum, JEON, Soomin, LEE, Dongho, LEE, Youngeun, PARK, Yejin
33: KR 31: 10-2023-0013953 32: 2023-02-01
54: PHARMACEUTICAL FORMULATION, PREPARATION METHOD THEREFOR, AND TABLET COMPOSITION
00: -
The present invention relates to a pharmaceutical formulation, a preparation method therefor and a tablet composition. The pharmaceutical formulation according to the present invention comprises an azetidin-1-yl{8-[(2,6- dimethylbenzyl)amino]-2,3-dimethylimidazo[1,2-a]pyridine-6-yl} methanone citrate salt as an active ingredient, and microcrystalline cellulose as an excipient.

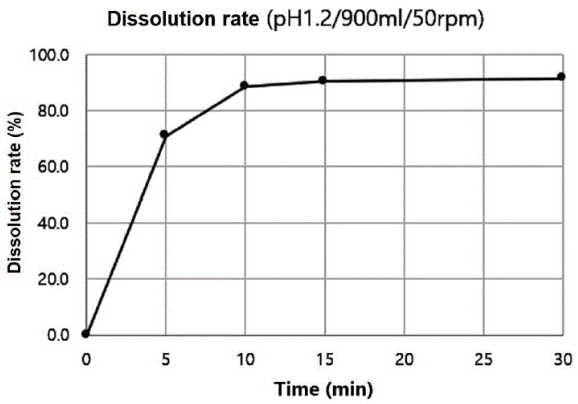

21: 2025/07169. 22: 2025/08/27. 43: 2026/09/09
51: A61K; A61P
71: ONCONIC THERAPEUTICS INC., JEIL PHARMACEUTICAL CO., LTD.
72: KIM, Aeri, YUN, Jungmin, KIM, John
33: KR 31: 10-2023-0013947 32: 2023-02-01
54: INJECTABLE COMPOSITION, PHARMACEUTICAL FORMULATION INCLUDING THE SAME, AND METHOD FOR PREPARING THE COMPOSITION
00: -
The present invention relates to an injectable composition, a pharmaceutical formulation comprising the same, and a method for preparing the same The injectable composition according to the present invention comprises: azetidin-1-yl{8-[(2,6-dimethylbenzyl)amino]- 2,3-dimethylimidazo[1,2-a]pyridin-6-yl}methanone citrate as active ingredient; and SBE-ß- CD.

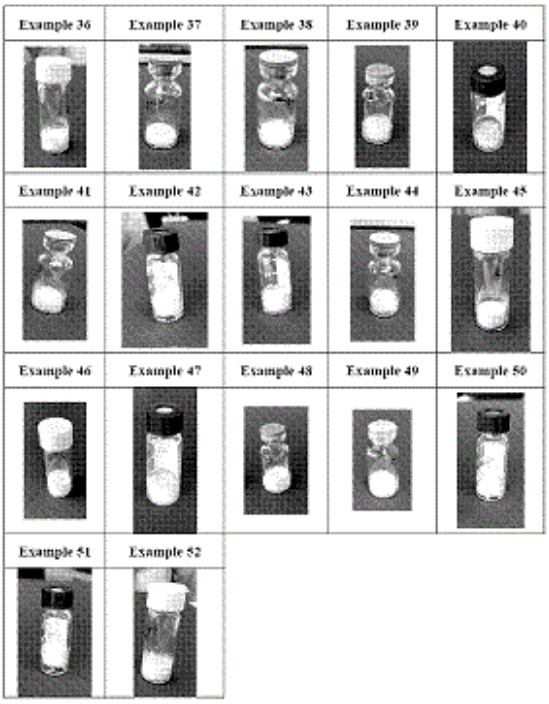

21: 2025/07183. 22: 2025/08/27. 43: 2026/09/04
51: C03B
71: VETROPACK HOLDING AG
72: STUHNE, DUBRAVKO, CORNAZ, CLAUDE, EGGER, DANIEL
33: EP 31: 23162621.9 32: 2023-03-17
54: TEMPERED GLASS BOTTLE WITH SANDWICH STRUCTURE
00: -
The present invention describes a glass container (100), comprising a wall section (101) and a bottom section (102), wherein the wall section (101) and the bottom section (102) surround an inner volume (Vi). The tempered section (103) forms a sandwich structure (200) comprising an outer compression stress layer (201) and an inner tensile stress layer (202).

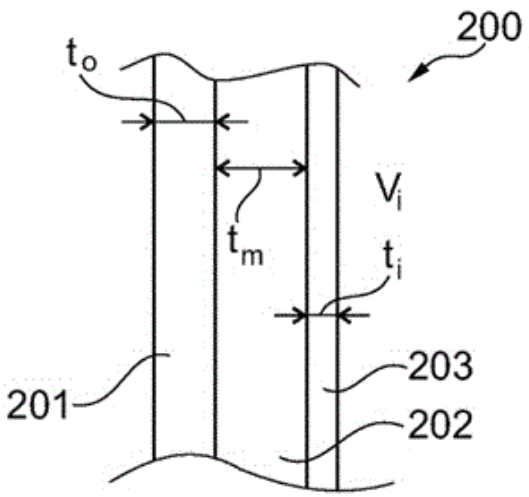

21: 2025/07184. 22: 2025/08/27. 43: 2026/09/04
51: C03B
71: VETROPACK HOLDING AG
72: STUHNE, DUBRAVKO, CORNAZ, CLAUDE, EGGER, DANIEL
33: EP 31: 23162639.1 32: 2023-03-17
54: TEMPERED GLASS BOTTLE WITH THIN WALL THICKNESS
00: -
The present invention describes a glass container (100), comprising a wall section (101) and a bottom section (102), wherein the wall section (101) and the bottom section (102) surround an inner volume, wherein at least the wall section (101) comprises a tempered section (103) having a wall thickness (tw) between 1,1 mm and 2,3 mm.

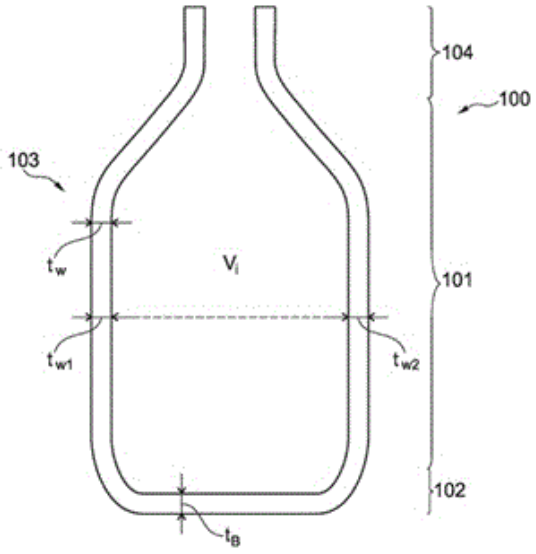

21: 2025/07242. 22: 2025/08/28. 43: 2026/09/04
51: F03D; B29C
71: POLYTECH A/S
72: DRACHMANN HAAG, MICHAEL, SØRENSEN, FRANK, RIX LANGEBÆK, JONAS
33: EP 31: 23155576.4 32: 2023-02-08
54: PROCESS FOR PRODUCING A POLYMER LEADING EDGE PROTECTION SHEET WITH CHAMFERED SIDE EDGES
00: -
Disclosed herein is a process for producing a polymer leading edge protection sheet with chamfered side edges for a wind turbine blade.

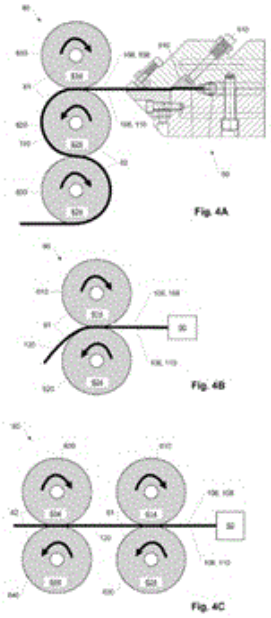

21: 2025/07243. 22: 2025/08/28. 43: 2026/09/04
51: A47J
71: BRAVILOR BONAMAT B.V.
72: VERHOEVEN, LORENZO ROMANUS
33: NL 31: 2036983 32: 2024-02-07
54: BEVERAGE FOAMING APPARATUS
00: -
Beverage foaming apparatus, comprising a gas pump (9), a beverage pump (12) connected to a tube (6) which is connectable to an external beverage holder to collect and transport said beverage out of said beverage holder, said gas pump (9) being arranged to supply foaming gas to the tube (6), wherein the beverage pump (12) is arranged to drive said gas together with said beverage through a restriction (13) downstream of the beverage pump (12) for the formation of a gas beverage foam mixture, wherein said apparatus

further comprises an exit line to an outlet (20) for the gas beverage foam mixture, wherein the apparatus comprises a first sensor (7, 21) downstream of the restriction (13) to monitor the density and quality of the gas beverage foam mixture downstream of the restriction (13).

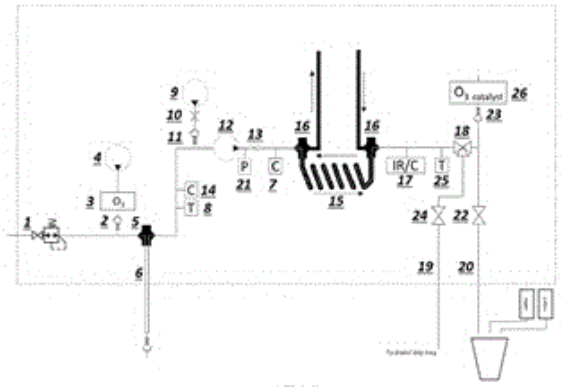

21: 2025/07245. 22: 2025/08/28. 43: 2026/09/04
51: G01N
71: HYPERMINE GLOBAL OY
72: MEKHRENGIN, MIKHAIL, SENNA VIEIRA, FRANCISCO, GENOUD, GUILLAUME
33: FI 31: 20235253 32: 2023-03-03
54: ACTIVE HYPERSPECTRAL MINERALOGY SENSING FOR MINING
00: -
According to an example aspect of the present invention, there is provided a method for active hyperspectral mineralogy sensing during a Run-of-Mine in field conditions, wherein the method comprises illuminating a point on a surface of a mining material with a first broadband light signal having a range of illumination within a wavelength range of about 1350 and about 2500 nm, to enable the determination of information related to at least one water-related, carbonate-related or hydroxide-related absorbance feature, receiving a reflected version of the first broadband light signal, wherein said reflected version of the first broadband light signal is a reflection from the mining material at different wavelengths within the range of illumination of the first broadband light signal, determining a reflectance spectrum of the point of the mining material based on said reflected version of the first broadband light signal and further determining said information related to at least one water- related, carbonate-related or hydroxide-related absorbance feature based on the reflectance spectrum and performing qualitative and quantitative mineralogy analysis based on said information related to at least one water-related, carbonate-related or hydroxide-related absorbance feature.

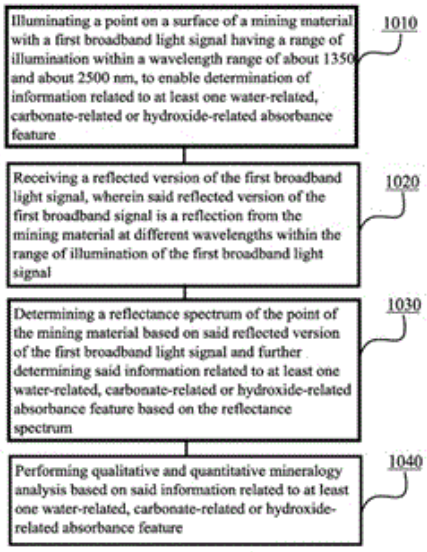

21: 2025/07276. 22: 2025/08/29. 43: 2026/09/04
51: B01D; C02F; E02B; E04H
71: CRYSTAL LAGOONS TECHNOLOGIES, INC.
72: FISCHMANN, FERNANDO
33: US 31: 63/482,875 32: 2023-02-02
54: METHOD FOR CREATING GEOMETRIC FRESHWATER SANITARY AREAS WITHIN LARGE WATER BODIES
00: -
Geometric freshwater sanitary areas are created within large water bodies without the use of physical barriers to separate the area. A coordinated reference system (CRS) is used for mapping the defined geometric freshwater area in terms of its position; the definition of directional vectors (DVs) for the introduction of freshwater into the geometric freshwater area through inlet elements to achieve a minimum renewal rate of such geometric freshwater area; the application of a Comparative Water Renewal Index (CWRI); and the application of a Homogeneity Index (HI) based on the mixing conditions of the geometric freshwater area and its required homogenous conditions. Utilizing the processes together generate geometric freshwater sanitary areas that are suitable for bathing (direct contact purposes).

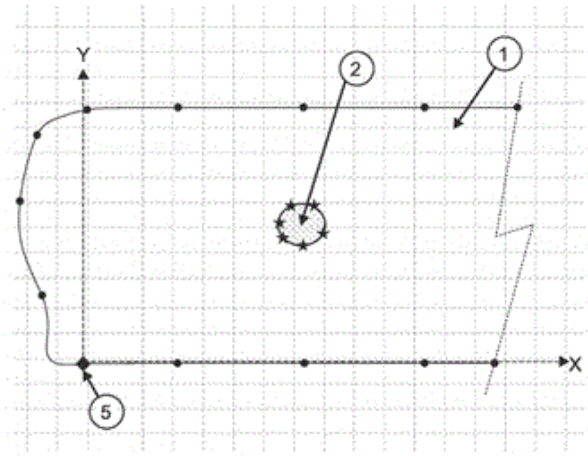

21: 2025/07277. 22: 2025/08/29. 43: 2026/09/04
51: G01C; E01B; E01C; G01B; G01N; B60W
71: DÄTWYLER SCHWEIZ AG
72: AHAGGACH, YASSINE, JAFARI, SAMIRA, IMHOF, MARKUS, LAMKHARBECH, YASSINE, NEJATI, MORTEZA
33: CH 31: CH000294/2023 32: 2023-03-16

54: METHOD FOR DETERMINING FEATURE CHARACTERISTICS OF A SURFACE

00: -

A method for determining feature characteristics (0) of a surface (1), where the method comprises the following steps: (a) equipping a mobile wheeled machine (2), preferably a vehicle, a hand-held device, or a robot, with (i) at least one measurement wheel (3), where the at least one measurement wheel (3) comprises at least one film-based sensor stripe (4) which is arranged in such a way that it circles the at least one measurement wheel (3) with respect to the axis of rotation of the at least one measurement wheel (3), and where the at least one film-based sensor stripe (4) is covered by a rubber layer (5) on a radially outer side of the at least one film-based sensor stripe (4), (ii) a movement sensing device (6), and (iii) means for data transmission (7) from the at least one film-based sensor stripe (4) and the movement sensing device (6); (b) driving the mobile wheeled machine (2) over the surface (1); (c) transmitting measurement data measured by the at least one film-based sensor stripe (4) and movement sensing data gathered by the movement sensing device (6) to a computer hardware (8) using the means for data transmission (7), where the computer hardware (8) is equipped with means for data reception (81); and (d) on the computer hardware (8): (i) receiving the transmitted measurement data and the transmitted movement sensing data using the means for data reception (81), and (ii) processing the received measurement data and the received movement sensing data by means of a sequence of one or more software modules (82) installed on the computer hardware (8), where at least one module of the sequence of one or more software modules (82) is configured to determine the feature characteristics (0) from its input.

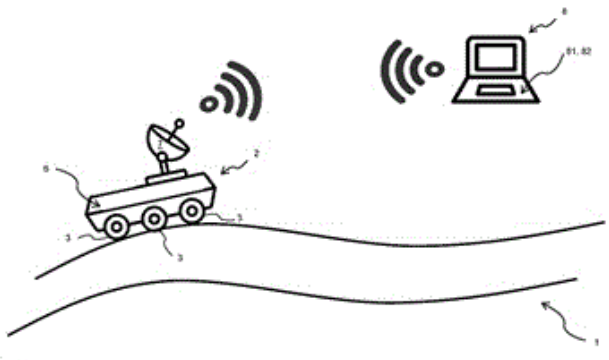

21: 2025/07279. 22: 2025/08/29. 43: 2026/09/07
51: G01M
71: CATERPILLAR INC.
72: LONGANBACH, DAVID M
33: US 31: 18/116,861 32: 2023-03-03

54: SYSTEM, APPARATUS, COMPUTER PROGRAM PRODUCT, AND METHOD FOR DETERMINING TRACK PITCH DISTANCE MEASUREMENT

00: -

Systems, apparatuses, computer program products, and methods can determine a distance between a pair of markers (300) removably coupled to a pair of non-adjacent joints (117) on a track assembly (116) of a track-type machine (110) using imaging captured by a camera (212) of a mobile electronic device (114). The determined distance between a pair of markers (300) can be representative of a track pitch extension, which can be used to determine wear of the track assembly (116).

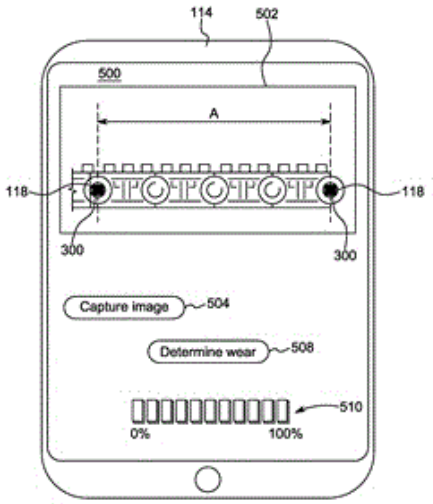

21: 2025/07402. 22: 2025/09/03. 43: 2026/09/09
51: C07C; A23K; C12P
71: EVONIK OPERATIONS GMBH
72: HEINING, Martin, LEBERT, Jochen, STAHL, Timo, GRIMMER, Ralf, HEIN, Lukas, MAYER, Alexander, MERZ, Juliane
33: EP 31: 23155155.7 32: 2023-02-06
54: PROCESS FOR PRODUCING FREE-FLOWING PARTICLES COMPRISING OR CONSISTING OF AN N-GUANYLAMINO ACID
00: -
The present invention relates to a process for preparing an N-guanylamino acid, e.g., GAA, comprising the steps of a) providing a liquid and/or solid mixture comprising an N-guanylamino acid, e.g., GAA, biomass and/or DNA, b) treating the mixture of step a) with an acidic solution and/or acidic agent, and c) isolating the N-guanylamino acid, e.g., GAA, from the mixture obtained in step b), characterized in that the step b) is performed at a pH lower than the pKa of the N-guanylaminoacetic acid of the mixture provided in step a), measured by means of a pH-electrode.

21: 2025/07403. 22: 2025/09/03. 43: 2026/09/09
51: C07C; A23K; C12P
71: EVONIK OPERATIONS GMBH
72: MERZ, Juliane, SCHNEIDER, Jens, MARIN, Kay, JANKOWITSCH, Frank, SCHNEIDER, Frank, MAYER, Alexander, DENZ, Tobias
33: EP 31: 23155154.0 32: 2023-02-06
54: PROCESS FOR PREPARING AN N-GUANYLAMINO ACID
00: -
The present invention relates to a process for preparing an N-guanylamino acid, e.g., GAA, comprising the steps of a) providing a liquid and/or solid mixture comprising an N-guanylamino acid, e.g., GAA, biomass and/or DNA, b) treating the mixture of step a) with an acidic solution and/or acidic agent, and c) isolating the N-guanylamino acid, e.g., GAA, from the mixture obtained in step b), characterized in that the step b) is performed at a pH lower than the pKa of the N-guanylaminoacetic acid of the mixture provided in step a), measured by means of a pH-electrode.

21: 2025/07888. 22: 2025/09/16. 43: 2026/09/25
51: C10G; B09B
71: CYCLION HOLDINGS PTY LTD
72: MAJOR, PHILIP
33: AU 31: 2023900407 32: 2023-02-17
54: A WASTE CONVERSION METHOD
00: -
A method for the conversion of waste, the method comprising the steps of: Introducing a waste feed material to a reaction vessel, wherein at least a portion of the waste feed material comprises organic material; Processing the waste feed material in the reaction vessel at an elevated temperature in the presence of a catalyst to convert the organic material to one or more hydrocarbon compounds; and Removing the one or more hydrocarbon compounds from the reaction vessel for use or for further processing.

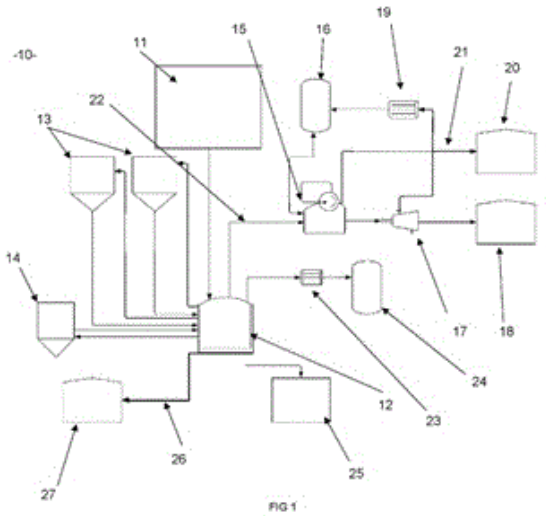

FIG 1

21: 2025/07983. 22: 2025/09/18. 43: 2026/04/23

51: C05G
71: NORTHEAST AGRICULTURAL UNIVERSITY
72: Xianfa MA, Bo SONG, Siyu GUO, Yu JIANG, Haiqing SHI, Linyan ZHANG, Yousong LI
54: BIOMASS SILICON FERTILIZER AND PREPARATION METHOD AND APPLICATIONS THEREOF
00: -
The present invention relates to the technical field of fertilizers, and in particular, to a biomass silicon fertilizer and a preparation method and applications thereof. The present invention provides a biomass silicon fertilizer, including the following components by mass portions: silicon fertilizers 0.5-1.5 portions and brown coal 0.25-0.5 portions; and a preparation method of the silicon fertilizer includes the following steps: (1) mixing rice husk and a dilute sulfuric acid solution and soaking for 20-28 h, extracting a precipitate, and drying, to obtain acid-hydrolyzed rice husk. (2) combusting the acid-hydrolyzed rice husk, to obtain ashed rice husk; and (3) mixing the ashed rice husk and potassium hydroxide, and performing high-temperature calcination, to obtain the silicon fertilizer. The biomass silicon fertilizer has a high silicon content, which can promote growth and development of crops and improving disease resistance of the crops.

21: 2025/08128. 22: 2025/09/23. 43: 2026/10/16
51: B60B; B60R; E04B
71: RIMGARD SWEDEN AB
72: Marcus EKSTRÖM, Lars IVARSSON
33: US 31: 63/453,309 32: 2023-03-20
54: AN ANTITHEFT DEVICE FOR CAR WHEELS AND AN INSERT STRUCTURE THERETO
00: -
A simplified universal antitheft device for preventing unauthorized removal of vehicle wheels is provided. The device includes an insert structure comprising an insert ring and a support structure.

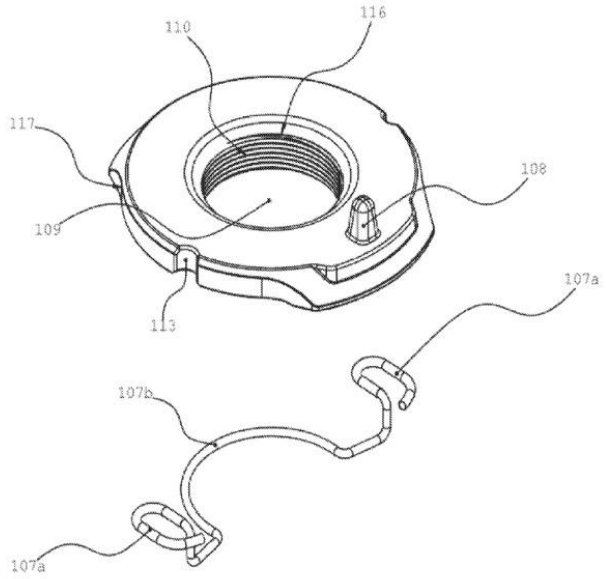

21: 2025/08394. 22: 2025/10/02. 43: 2026/10/21
51: G06F; G08B; H04M; H04W
71: SEFEKO (PTY) LTD
72: VAN BILJON, Cornelis Hendricus, VAN BILJON, Bernardus Daniel, VAN LEEUWEN, Pierre-Andrė, MOUTON, Pieter Kossen
33: ZA 31: 2025/00951 32: 2025-01-29
54: HAND-HELD TWO-WAY RADIO DEVICE
00: -
A hand-held two-way radio device 10 comprises a hand-held portable body 12. A controller 14 is located in the body. The controller comprises a processor 16 and an associated memory arrangement 18. A wireless communications arrangement 20 is connected to the controller. A user interface 22 is provided on the body and is connected to the controller 14. The user interface does not comprise a screen, but comprises a speaker 26 and user response enabling means 28 comprising at least one manually operable dedicated response button 28.1, 28.2 and/or a microphone 30. The controller 14 is configured to prompt a user via the speaker by means of audible natural language messages (data relating to which messages is prestored in a memory arrangement, either local or remote), to respond via the at least one dedicated response button. The controller is configured to process data relating to the response for transmission via the wireless communications arrangement.

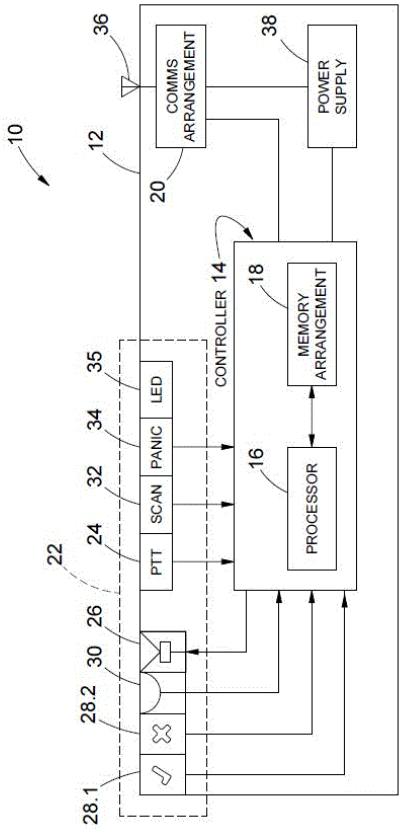

21: 2025/08396. 22: 2025/10/02. 43: 2026/11/03
51: C07K; C12N
71: JOINT STOCK COMPANY "BIOCAD"
72: POLIAKOV, Dmitrii Nikolaevich, LEGOTSKII, Sergei Aleksandrovich, DANILOV, Maksim Andreevich, BARANOVSKAIA, Marianna Dmitrievna, IVANOVA, Kseniia Vitalievna, NAZARENKO, Olga Viktorovna, IAKOVLEV, Pavel Andreevich, MOROZOV, Dmitry Valentinovich
33: RU 31: 2023105130 32: 2023-03-06
54: "ANTIBODY-LIKE MOLECULE COMPRISING HETERODIMER OF HUMAN CD1B (CLUSTER OF DIFFERENTIATION 1) PROTEIN"
00: -
The present invention relates to the field of biotechnology, specifically to antibody-like molecules that comprise a heterodimer of membrane-proximal domains of human CD1b (cluster of differentiation 1) protein, as well as to a process for producing said antibody-like molecules. The invention further relates to a nucleic acid encoding said antibody-like molecule, an expression vector, a host cell for producing said antibody-like molecule and to a method for producing said cell.

21: 2025/08654. 22: 2025/10/14. 43: 2026/09/10
51: G06F
71: JIANGSU XCMG STATE KEY LABORATORY TECHNOLOGY CO., LTD.
72: WANG, BIN, LI, HANSHUANG, YUAN, GUOWEI, WANG, MEINA, LI, YANG
33: CN 31: 202311575155.3 32: 2023-11-23
54: SOFTWARE QUALITY DETECTION METHODS, SYSTEMS, AND STORAGE MEDIA
00: -
The present disclosure discloses a software quality detection method, a system and a storage medium, which relates to the field of software design. The method comprises: analyzing software program source code to construct a control flow graph, a procedure-level call graph, and a file-level call graph; extracting a plurality of metrics based on the software program source code, the control flow graph, the procedure-level call graph, and the file-level call graph; obtaining internal and external indicators related to software quality detection using a plurality of measurement functions based on the plurality of metrics; and detecting software quality based on the internal and external indicators.

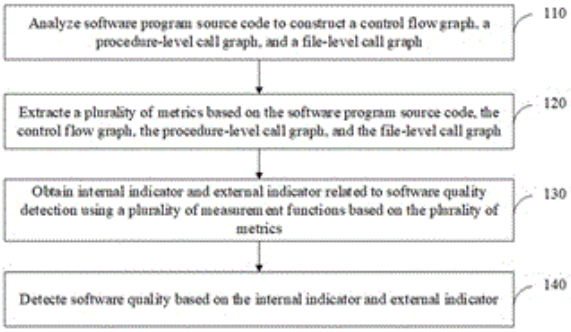

21: 2025/08696. 22: 2025/10/15. 43: 2026/10/29
51: C21D; G16C
71: ARCELORMITTAL
72: Nicolas CHARBONNIER, Ronan JACOLOT
33: IB 31: PCT/IB2023/056772 32: 2023-06-29
54: METHOD FOR DETERMINING AN AMOUNT OF BAINITIC FERRITE FORMED DURING A STEEL PROCESSING OPERATION, ASSOCIATED MONITORING OR CONTROL METHODS
00: -
The method comprises: - s1) determining a bainitic ferrite growth rate proportional to: exp(-Q*/RT), Q* being an activation energy for an austenite to bainitic ferrite transformation, and proportional to a

moderation coefficient which approaches zero when a free enthalpy of a bainitic ferrite phase approaches a free enthalpy of an austenite phase that depends on a Carbon content (Cγ) in the austenite phase, - s2) determining a cementite growth rate, depending at least on the Carbon content in the austenite phase, - s3) determining values at a next time step for bainitic ferrite, austenite and cementite phases fractions (fa, fγ, fc), based on the bainitic ferrite growth rate and on the cementite growth rate, and updating the Carbon content in the austenite phase based on the values of said phases fractions.

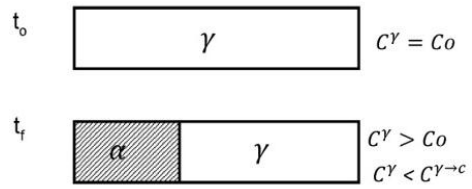

21: 2025/08700. 22: 2025/10/15. 43: 2026/10/29
51: B32B; C21D; C23C; C23G
71: ARCELORMITTAL
72: Eric GAILLY, Nauwfel AMIMI, Eric SILBERBERG, Sergio PACE, Vincent RUWET
33: IB 31: PCT/IB2023/056700 32: 2023-06-28
54: PRODUCTIVE COATING PROCESS FOR A STEEL SHEET, CORRESPONDING EQUIPMENT, A METALLIC COATED HOT ROLLED STEEL SHEET
00: -
A method for manufacturing a coated steel sheet comprising the following steps: a. Providing a steel sheet (10), b. Descaling said steel sheet by acid pickling, c. Feeding said descaled steel sheet into a pressurized chamber (3) above the atmospheric pressure, said pressurized chamber comprising an inlet (2), and being connected via at least one sealing lock (20) to at least one vacuum deposition chamber (4), d. Depositing a metallic coating layer by vapor deposition at a sonic speed, wherein a gas is blown into the pressurized chamber (3) to keep it at a pressure above atmospheric pressure, said gas being released through the inlet (2).

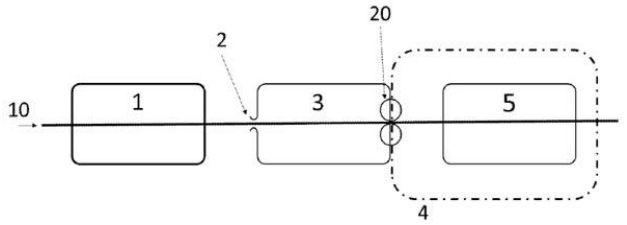

21: 2025/08900. 22: 2025/10/22. 43: 2026/10/29
51: G01S
71: ARCELORMITTAL
72: Pablo CORROCHANO DIAZ, Beatriz GONZALEZ FERNANDEZ, Jaime PEREZ ORDIERES
33: IB 31: PCT/IB2024/056449 32: 2023-07-06
54: METHOD FOR DETERMINING A FLUX OF AERIAL PARTICULATES AND ASSOCIATE ELECTRONIC DEVICE
00: -
A method for determining a flux of aerial particulates, the method comprising: - s1) controlling a steerable lidar device (2) so that the lidar device (2) scans a control surface (S), by emitting several laser pulses directed along different emission axis and acquiring corresponding back-scattered optical signals; - s2) processing the back-scattered optical signals to determine, along each emission axis, values of a particulate density and of a colinear wind speed at different distances from the lidar device, - s3) computing a particulates flux through the control surface (S) based on said values of the particulate density and of the colinear wind speed.

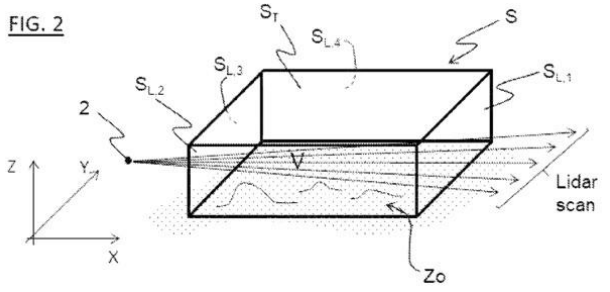

21: 2025/08933. 22: 2025/10/23. 43: 2026/10/29
51: C23C
71: ARCELORMITTAL
72: Vincent RUWET, Sergio PACE, Océane GILLET, Romain CORBEAU, Pierre BANASZAK
33: IB 31: PCT/IB2023/057278 32: 2023-07-17
54: VAPOUR NOZZLE FOR JVD
00: -
The invention relates to a sonic vapour jet coater, for depositing coatings formed of metal or metal alloy on

a metallic running substrate, comprising : - a repartition chamber, - a vapour outlet duct, connected to said repartition chamber and able to spray a metal alloy vapour along a main ejection direction, formed by - an adjustable jet width system comprising a separator wall, a rod, and a displacement system wherein - said separator wall being in said duct, configured to closely fit said top wall and bottom wall, and extending essentially from the entry opening to the exit opening, - said rod linking said separator wall to said displacement system, and configured to closely fits said top wall and bottom wall and passing through a lateral wall, - said displacement system being able to displace said rod along the length of the exit opening.

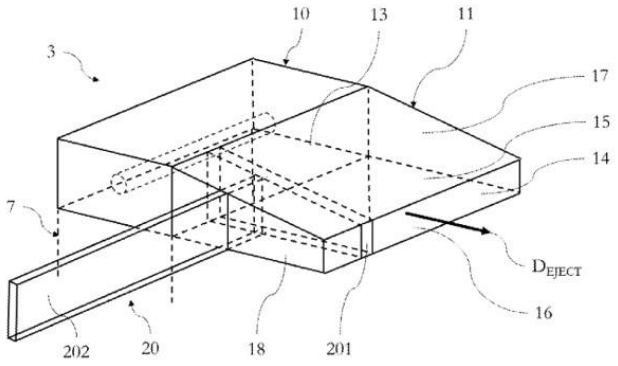

21: 2025/09229. 22: 2025/10/31. 43: 2026/11/03
51: A22C
71: NORDISCHER MASCHINENBAU RUD. BAADER GMBH + CO. KG
72: GOLDMANN, Branden Jared
33: EP 31: PCT/EP2023/063294 32: 2023-05-17

54: TROUGH AND TROUGH CONVEYOR, CONFIGURED AND ADAPTED TO TRANSPORT FISH TRANSVERSELY TO THEIR LONGITUDINAL EXTENT

00: -

The invention relates to a trough (10), configured and adapted to receive fish (11) which are able to be transported transversely to their longitudinal extent in a substantially horizontal transport plane E in a transport direction T by means of a trough conveyor (38), wherein the trough (10) comprises at least one head support (13) and at least one main support (14), wherein each main support (14) comprises a main body (15) having a support surface (16) parallel to the transport plane E and a contact surface (17) oriented substantially perpendicular to the support surface (16), which trough is distinguished in that the contact surface (17) is formed by a divider (18) oriented at an angle $\beta \neq 0$ relative to a longitudinal axis L of the trough (10), wherein the divider (18) divides the support surface (16) of the main support (14) into two separate regions, namely in particular into a body support region (19) and a tail support region (20). The invention relates further to a trough conveyor (38) having such troughs (10).

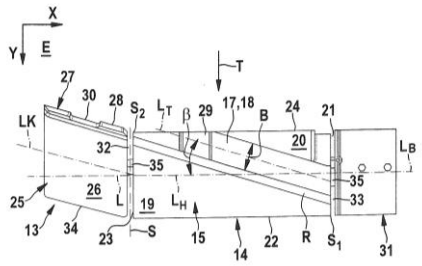

21: 2025/09928. 22: 2025/11/20. 43: 2026/10/09
51: F28D
71: BEISTAR CZ, S.R.O.
72: MLCEK, Jiri
33: CZ 31: PV 2023-173 32: 2023-04-28

54: A SYSTEM FOR STORING AND TRANSFERRING HEAT, COMPRISING A SOLID BULK MATERIAL

00: -

The present invention relates to a heat storage and transfer system, comprising at least one heat source for generating thermal energy; a high-temperature heat storage system comprising a bulk refractory material (1) filling a high-temperature storage space (14) for storing the generated thermal energy; at least one heat consumption system for consuming the stored thermal energy; and a heat transfer mechanism for transferring heat from the heat source to the high-temperature heat storage system and from the high- temperature heat storage system to the heat consumption system. The heat transfer mechanism is a closed gas circuit connecting the heat source, the high-temperature heat storage and the heat consumption system. The high-temperature heat storage system is partially encased by a load-bearing inner shell (3). The bulk refractory material (1) comprises a particle fraction with a sphericity range of 0.4 to 1 and a medium particle size range of 0.5 to 20 mm. The ratio of the volume of the largest to the smallest particles is at most 5:1. The load-

bearing inner shell (3) is enclosed with a thermal-insulating outer shell (5) such that a gas gap (4.1) is provided between the load-bearing inner shell (3) and the thermal-insulating outer shell (5) to recover heat loss from the high-temperature heat storage penetrating the load-bearing inner shell (3). The gas gap (4.1), together with an interconnecting gas channel (4.3), connects the high-temperature heat storage to at least one technological area (4.2), which is further connected to at least one heat consumption system. A hot gas channel (7) connects the high-temperature heat storage system to at least one heat source. The invention also relates to a method of storing and transferring heat using said system.

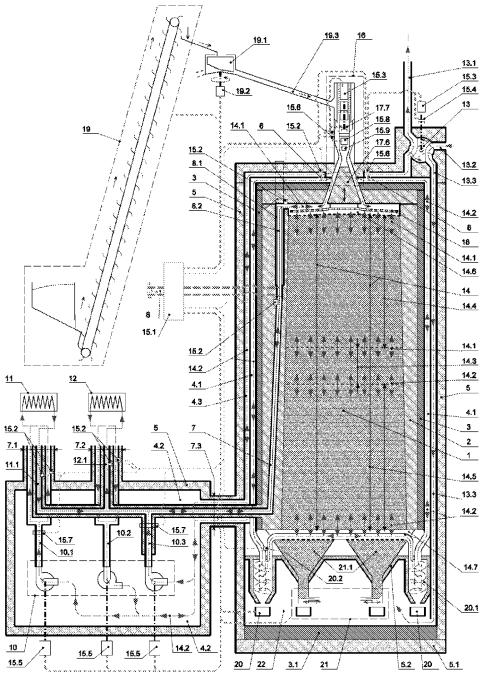

21: 2025/10058. 22: 2025/11/25. 43: 2026/10/29
51: B61B; E01B; G01K; G01R; G06N
71: KB SIGNALING INC.
72: DI SANTI, Eduardo, FRIES, Jeffrey, LOPEZ, Francisco, MIJATOVIC, Nenad

54: COMPUTER-IMPLEMENTED METHOD FOR ESTIMATING A RAIL TEMPERATURE OF THE RAILS OF A TRACK SECTION USING A TRACK CIRCUIT

00: -

The present invention relates to a computer-implemented method for estimating a temperature of rails (18) of a track section (16) using a track circuit (40) comprising: obtaining track circuit data comprising a plurality of measured currents (ITX, IRX) of a track circuit; obtaining track circuit parameters; transforming the measured currents (ITX, IRX) based on the obtained track circuit parameters and the obtained track circuit data by using a first trained machine-learning model (44), wherein the input of the first trained machine-learning model are the obtained track circuit data and the track circuit parameters and the output of the first trained machine-learning model are the normalized measured currents; and estimating rail temperature using a second machine-learning model (48), wherein the input of the second machine learning model is based on the normalized measured currents and the output of the second machine-learning (48) model is the rail temperature.

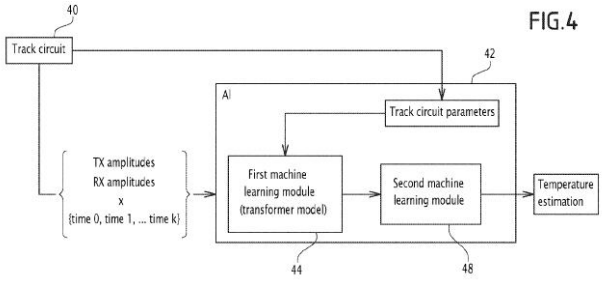

FIG.4

21: 2025/10116. 22: 2025/11/26. 43: 2026/07/08
51: H01M
71: RISCO, Raul-Ioan
72: RISCO, Raul-Ioan
33: RO 31: a 2023 00209 32: 2023-04-27

54: BATTERY MODULE AND ENERGY STORAGE RACK

00: -

The invention refers to a module/rack, for storing electrical energy, which is a device consisting of two or more cells/modules, put together by means of composite material plates, rods and connecting elements, resulting in a rigid assembly, having a cooling and/or forced heating system, at the battery cell level. Cooling and/or heating is done by convection and conduction, convection being ensured by a turbine fan and side radiators through which cooling liquid circulates, and conduction, at the cell level, by a heat exchanger made of copper wool or other thermally conductive materials, in direct contact with the surfaces of the battery cells, with controlled humidity. The module has an anti-fire system, consisting of a flammable gas exhaust

system and the injection or spraying of inert gas and/or anti-fire liquid and from ampoules with anti-fire liquid.

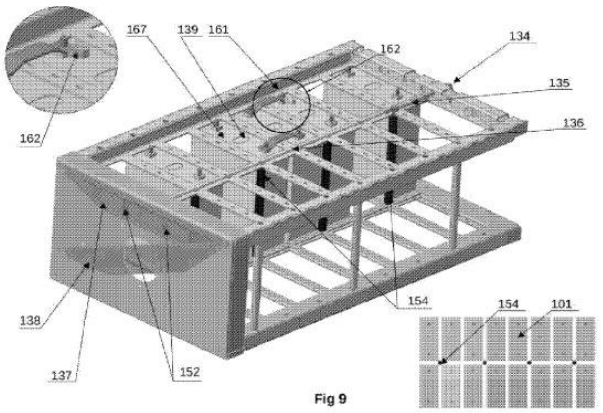

Fig 9

21: 2025/10138. 22: 2025/11/27. 43: 2026/09/11
51: E21F; G01D; G01L
71: Dun-Cron Electrical CC
72: CRONJE, Willem Hendrik, CRONJE, Michael Duncan
33: ZA 31: 2024/06556 32: 2024-08-27
54: A load-indicating device
00: -
A load-indicating device (10) for a safety net (27) in an underground excavation is provided. The device (10) comprises a housing (20) which accommodates a shear mechanism (19) and receives a load-bearing member (14). The shear mechanism (19) includes a shear member (12) configured to fail at a predetermined load. The load-bearing member (14) is held captive by the shear member (12) and exerts tension on it. Upon failure of the shear member (12) due to overload, a primary visual indicator (33) is exposed, signalling that the prescribed load limit has been exceeded. A key advantage is a secondary, pretension indicator (6) which moves to a visible extended position to confirm that the device (10) has been correctly installed and pretensioned to an operational threshold. The device provides an unambiguous, binary indication for both correct installation and overload, thereby improving mine safety and preventing costly, premature servicing.

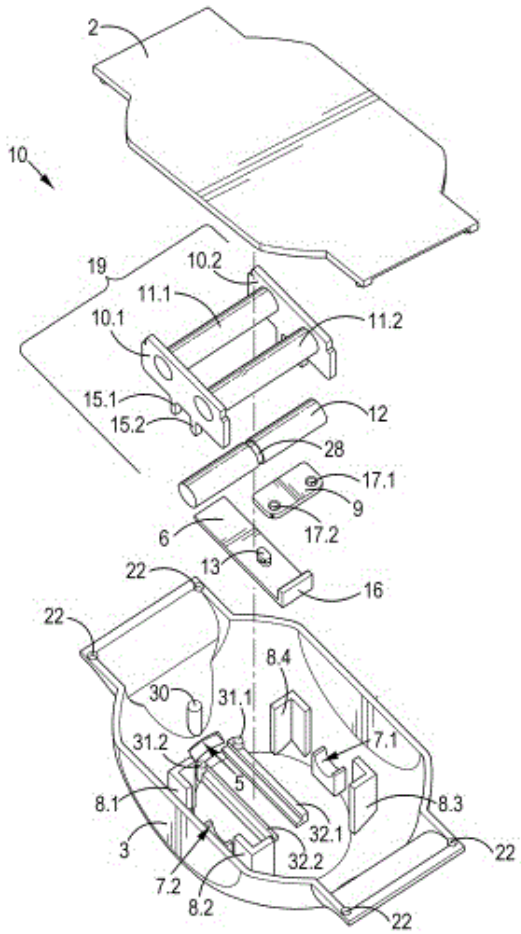

21: 2025/10366. 22: 2025/12/03. 43: 2026/11/11
51: B26F; B65D; B65H
71: KHAN, Faadil
72: KHAN, Faadil
54: SYSTEM FOR AND METHOD OF DISPENSING, CUTTING, AND REELING ROLLED SHEET MATERIALS
00: -
A system and method are provided for dispensing, cutting, and reeling rolled sheet materials such as adhesive films, vinyls, wallpapers, and similar coverings. The system includes a tubular housing configured to store and support a roll of sheet material, a controlled-tension dispensing mechanism to regulate feed and alignment, and a cutting assembly enabling both transverse and longitudinal cutting of the material during application. A reel-back mechanism allows controlled retraction of unused material to prevent waste and assist with repositioning. The system facilitates simultaneous management of the adhesive layer and its backing or liner, enabling cleaner application, reduced

contamination, and improved surface finish quality. The method includes steps of dispensing the sheet material from the housing, maintaining tension and alignment during application, selectively cutting the material as required, and reeling back the remaining portion for reuse or storage.

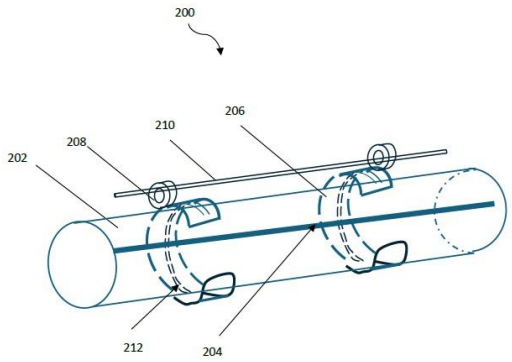

21: 2025/10369. 22: 2025/12/03. 43: 2026/10/20
51: G01N
71: SUZHOU UNIVERSITY
72: GONG, Wei, LIN, Manli, WANG, Fang, XU, Pan, MIN, Ning

54: PORTABLE WATER QUALITY SPECTROMETER WITH IOT WIRELESS TRANSMISSION FOR RAPID ANALYSIS

00: -

Disclosed is a portable water quality spectrometer with Internet of things (IoT) wireless transmission for rapid analysis, including an upper housing and a lower housing which are matched with each other. The upper housing and the lower housing form a portable structure together. The lower housing is provided with a control mechanism, an acquisition mechanism is disposed on the lower housing in a penetrating manner, and the upper housing is provided with a locking assembly. The control mechanism is electrically connected to the acquisition mechanism. The acquisition mechanism includes a liquid storage assembly and a cover plate. The liquid storage assembly penetrates through and is secured to an inner wall of the lower housing, and the cover plate is hinged to an upper surface of the upper housing and can cover an upper opening of the liquid storage assembly.

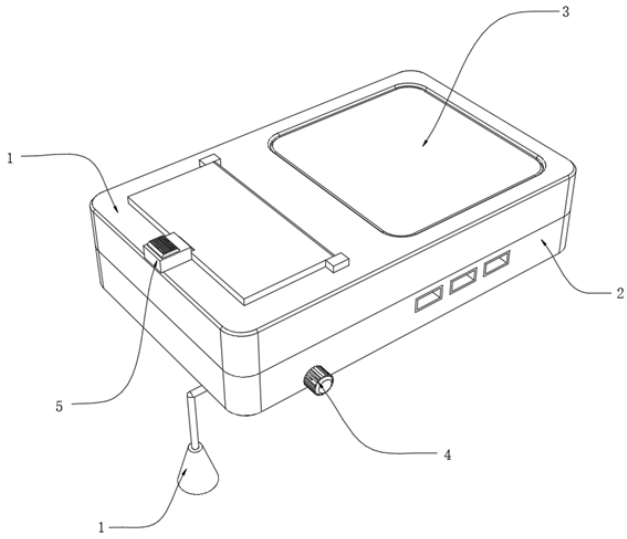

21: 2025/10468. 22: 2025/12/04. 43: 2026/10/19
51: E21F
71: INNOVATIVE MINING PRODUCTS (PTY) LTD
72: CROMPTON, Brendan, KNOX, Greig
33: ZA 31: 2023/05921 32: 2023-06-05

54: AN INTEGRATED MINE MONITORING SYSTEM

00: -

The invention provides a system for monitoring the displacement of an excavation profile within an underground mine and for warning of excavation failure. The system includes a plurality of sensors configured to measure at least one physical parameter associated with the excavation profile and to transmit corresponding real-time data on the measurements. The system includes a processor which is configured to calculate the probability of excavation failure of the excavation profile using real-time data and a historical dataset and to transmit a signal if the calculated probability exceeds a preset value. The system further includes at least one receptor module which is configured to initiate a response on receipt of the signal.

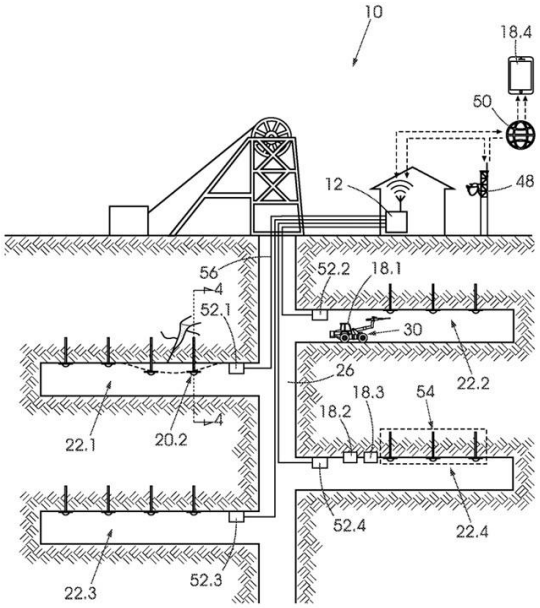

21: 2025/10707. 22: 2025/12/11. 43: 2026/10/20
51: E04G
71: XINJIANG AGRICULTURAL UNIVERSITY
72: JIANG, Chunmeng, ZHANG, Zihao, CHEN, Yu, LI, Shuangxi, GONG, Jingwei, JIANG, Haibo, ZHANG, Xiaoyan

54: SURFACE TREATMENT DEVICE FOR CONCRETE EROSION RESISTANCE

00: -

The present invention discloses a surface treatment device for improving the erosion resistance of concrete, suitable for construction engineering applications. The device comprises a base, a storage tank with an internal mixing mechanism, a spraying mechanism, and a lifting column. A conveying system comprising pumps, material extraction pipes, discharge pipes, and spraying plates enables uniform spraying of anti-corrosion coatings onto concrete surfaces. A lifting mechanism housed within a vertical column supports a positioning frame and rollers for smoothing the applied coating, improving application uniformity. The configuration enables automated, efficient, and consistent surface treatment, reducing manual labor and improving construction quality. The use of multiple mechanisms, including mixing, spraying, lifting, and rolling, enhances construction automation and ensures even application of protective materials. The device is suitable for large-area concrete treatment in construction sites, increasing corrosion resistance and extending the service life of concrete structures.

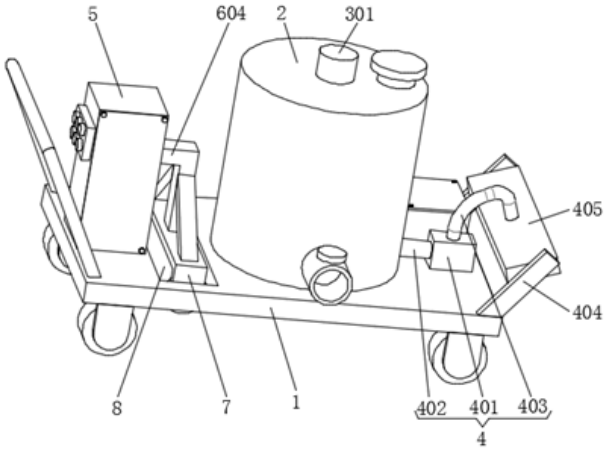

21: 2025/10708. 22: 2025/12/11. 43: 2026/10/20
51: A01G
71: SHANDONG INSTITUTE OF POMOLOGY
72: CHANG, Yuansheng, AI, Chengxiang, WANG, Yongxu, LI, Linguang

54: DETACHABLE WRAPPING SLEEVE FOR COLD PROTECTION AND HEAT INSULATION OF ALMOND TREE TRUNK

00: -

The present invention discloses a detachable wrapping sleeve for cold protection and heat insulation of almond tree trunks. The sleeve comprises an inner layer, a middle layer, and an outer layer. The inner layer includes a breathable layer and a moisture-absorbing layer. A fixed mechanism is provided on the surface of the sleeve body, and a sealing mechanism is arranged on the front to improve attachment tightness. The structure wraps securely around the almond tree trunk to enhance thermal insulation and prevent cold damage. The fixed mechanism facilitates secure positioning on the trunk surface, while the sealing mechanism improves closure around the contact area. This configuration provides effective cold protection, ease of installation and removal, and improved sealing, making the sleeve reusable and practical for seasonal agricultural applications. The invention improves plant resilience to cold weather while addressing reusability, functional versatility, and structural stability in field conditions.

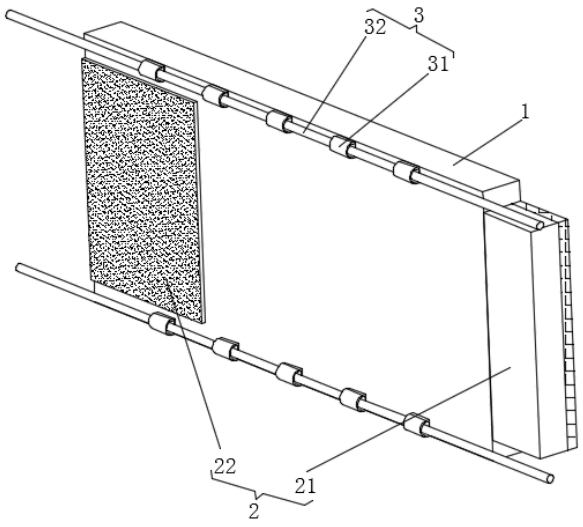

21: 2025/10716. 22: 2025/12/11. 43: 2026/10/20
51: G09B
71: SHAANXI INSTITUTE OF TECHNOLOGY
72: YUAN, Ruize
54: CALCULUS EQUATION CLASSIFICATION EXPLANATION AND DEMONSTRATION DEVICE FOR ADVANCED MATHEMATICS TEACHING
00: -
The present invention discloses a calculus equation classification explanation and demonstration device for use in advanced mathematics teaching. The device comprises a driving box with a rotating shaft connected via a bearing, which supports a bearing plate and vertical plate. A rectangular frame is mounted atop the vertical plate and includes a partition plate, flipping plate, and demonstration plate. A rotating column and protective box are also included. The device further comprises a servo motor-driven screw rod, rectangular plate, toothed plate, and gear assembly to enable controlled movement and positioning. This configuration allows for the classification, comparison, and visual explanation of calculus equations. The rotation and adjustable angles enhance teaching interaction and visibility. The device is particularly suited for classroom environments to improve student understanding of calculus structures and relationships through mechanical demonstration. It combines structural adaptability with educational clarity to enhance advanced mathematics instruction.

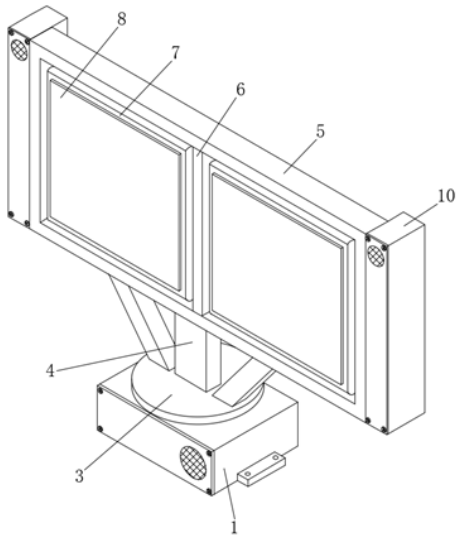

21: 2025/10966. 22: 2025/12/18. 43: 2026/08/31
51: B63B
71: SAIPEM Offshore France S.A.
72: COLMARD, Christophe
33: FR 31: FR2305569 32: 2023-06-02
54: PENDULUM COUNTERWEIGHT SEMI-SUBMERSIBLE FLOATER FOR OFFSHORE WIND TURBINE AND METHOD OF INSTALLING SAME
00: -
The invention concerns a semi-submersible float (2a) with pendulum counterweight for an offshore wind turbine and its installation method. The float comprises two tubular structures (4) each comprising three tubular branches forming a right triangle with a horizontal branch (6), a vertical branch (8) and a diagonal branch (10), the tubular structures being assembled together by their respective vertical branch (8) to form a pylon intended to be aligned with an axis (X-X) of a wind turbine mast (12) with the tops of the tubular structures opposite to the pylon being spaced apart by an angle (a) comprised between 25° and 80°, a connection tube (14), and a counterweight (16) fixed to the tubular structures, on the one hand at the level of the pylon, and on the other hand at the level of their tops opposite to the pylon, the length of the tendon (18-1) fixed to the pylon being greater than the length of the other two tendons (18-2).

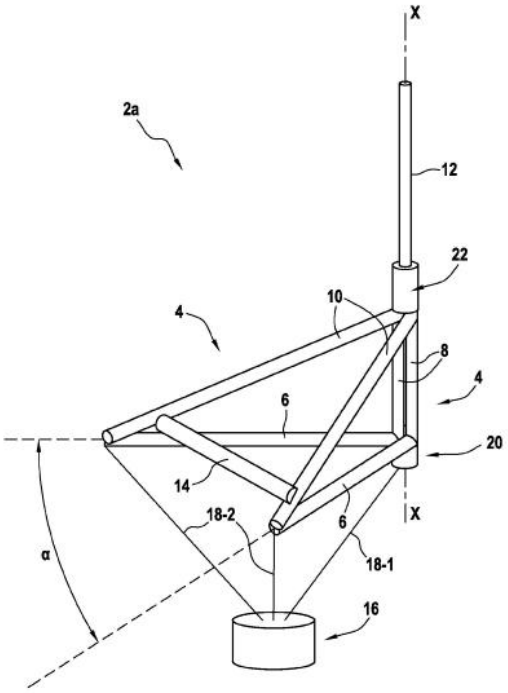

21: 2025/11020. 22: 2025/12/19. 43: 2026/10/05
51: A61K
71: NETWORK-NUTRITION PTY LIMITED
72: GORMAN, Ryan
33: US 31: 63/663,988 32: 2024-06-25
54: A MELATONIN-ENRICHED COMPOSITION OF PISTACIA VERA (PISTACHIO) AND A METHOD OF PREPARATION THEREOF
00: -
Provided herein are methods and compositions for a melatonin-enriched composition of Pistacia vera (Pistachio).

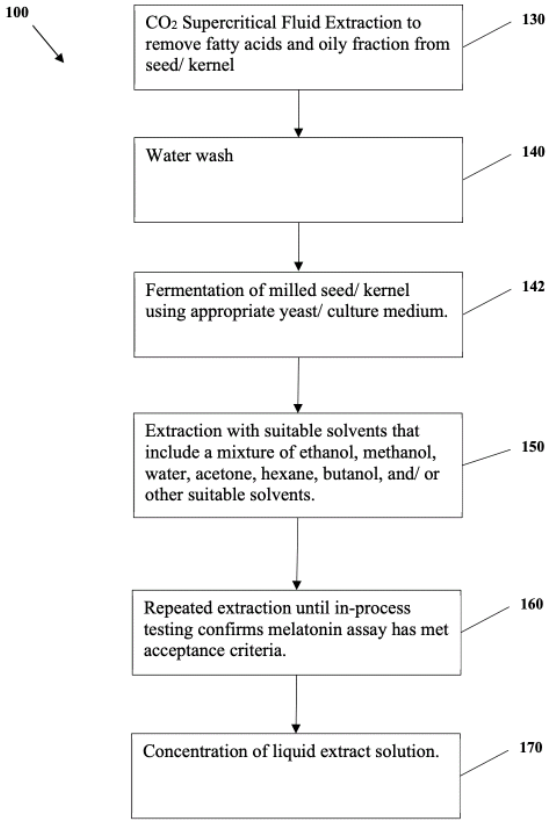

21: 2025/11042. 22: 2025/12/19. 43: 2026/09/14
51: B60W; G08G
71: CHERY AUTOMOBILE CO., LTD.
72: WANG, JINLEI, KOU, QINGLIN, LI, PENGLONG, CHEN, CHANGHONG
33: CN 31: 202411041812.0 32: 2024-07-31
54: METHOD AND APPARATUS FOR PREVENTING ENTIRE VEHICLE COLLISION FOR VEHICLE, VEHICLE, AND STORAGE MEDIUM
00: -
The present disclosure provides a method and an apparatus for preventing an entire vehicle collision for a vehicle, a vehicle, and a storage medium. The method includes: determining whether a preceding vehicle of a current vehicle performs a deceleration operation; calculating, in a case that the preceding vehicle performs the deceleration operation, a collision risk coefficient between the current vehicle and the preceding vehicle; determining whether the collision risk coefficient is greater than a predetermined first threshold; calculating, in the case that the collision risk coefficient is greater than the predetermined first threshold, forward-backward collision risk coefficients of the current vehicle

respectively under a first deceleration strategy, a second deceleration strategy, and a third deceleration strategy; and comparing the forward-backward collision risk coefficients with a predetermined second threshold, determining a target deceleration strategy based on a comparison result, and controlling the current vehicle to execute the target deceleration strategy.

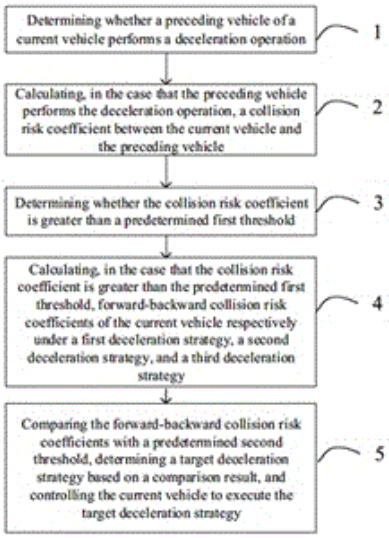

21: 2026/00120. 22: 2026/01/05. 43: 2026/10/20
51: G01N
71: WUWEI VOCATIONAL AND TECHNICAL UNIVERSITY
72: GONG, Jianjun, CAI, Hai, JIA, Hui, WANG, Zhaojun, LIANG, Bo
33: CN 31: 2025118562675 32: 2025-12-12

54: SMART AGRICULTURAL SOIL POLLUTANT UNMANNED AERIAL VEHICLE ALL-WEATHER THREE-DIMENSIONAL MONITORING AND QUANTIFICATION METHOD

00: -

The present invention discloses a smart agricultural soil pollutant unmanned aerial vehicle all-weather three-dimensional monitoring and quantification method, comprising the following steps: S1. The collection module obtains multi-source data of the monitoring area; S2. Build a multi-source data fusion processing module; S3. Construct a heavy metal pollution sensitive vegetation index and establish a soil pollutant content inversion model; S4. Using three-dimensional monitoring and quantification algorithms, and applying Kriging interpolation algorithm to convert discrete point pollutant concentration data into a continuous three-dimensional pollutant distribution field; S5. Establish a all-weather monitoring data compensation algorithm. The present invention achieves the complementary advantages of optical and radar data by constructing a multi-sensor collaborative acquisition system for unmanned aerial vehicles, utilizing multi-source data fusion technology, combining scale invariant feature transformation algorithm and attention based deep learning network.

21: 2026/00158. 22: 2026/01/05. 43: 2026/09/09
51: F23C; F23D; F23G
71: Andritz Oy
72: BRUNOU, Jarkko, LAPPALAINEN, Heikki, NOKKA, Tero, RÄSÄNEN, Jani, OSMALA, Kari
33: FI 31: 20235639 32: 2023-06-08

54: AN APPARATUS FOR OPERATING A LIQUOR GUN OF A RECOVERY BOILER, A RECOVERY BOILER AND A METHOD OF OPERATING THE APPARATUS

00: -

The invention relates to an apparatus for operating a liquor gun (20) of a recovery boiler (100), wherein the apparatus comprises liquor burner rack (10) comprising -a base (11) -a frame (12) attached movably on a base (11) being provided outside a recovery boiler (100) such that the frame (12) is movable back and forth along the base (11) in a direction towards a liquor gun opening (101) at a wall (102) of the recovery boiler (100), -a holder (13) for holding a liquor gun (20) within the frame (12), and attached upwards and downwards movable at the frame (12) and rotatable in respect of a tilting axis (TX) being perpendicular to the directions of the back-and-forth movements of the frame (12) and the holder (13), -an entering element (14) being arranged to move the frame (12) back and forth along the base (11) such that at least part of the liquor gun (20) hold by the holder (13) is movable into and out from the recovery boiler (100) through the liquor gun opening (101), -a lifting element (15) arranged to lift and lower the holder (13) in respect of the frame (12), and -a tilting element (16) arranged to tilt the holder (13) in respect of the tilting axis (TX), and wherein the apparatus further comprises a hatch (103) arranged at the recovery boiler (100) liquor gun opening (101) and arranged

to be closed and opened by a hatch actuator (104). In the apparatus according to the invention the hatch actuator (104) is arranged to open and close the hatch (103) automatically according to movements of the frame (12) of the liquor gun rack (10) such that when the frame (12) is moved towards the liquor gun opening (101) the hatch (102) is opened and when the frame (12) is moved away from the liquor gun opening (101) the hatch (103) is closed. The invention relates also to a recovery boiler (100) and a method of operating the apparatus.

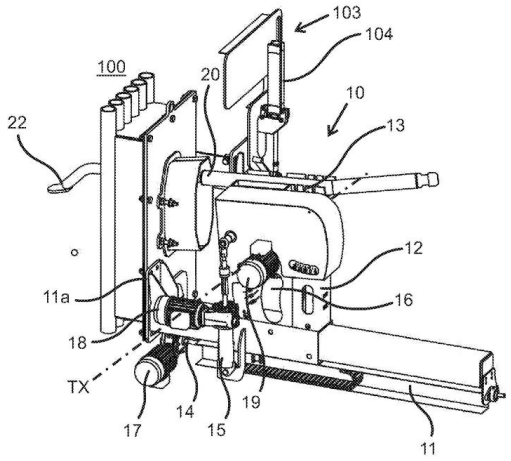

21: 2026/00160. 22: 2026/01/05. 43: 2026/09/10
51: B01F; B08B; C12G; C12H; C12L
71: Ingeagro Sociedad Anónima
72: YAKASOVIC SAAVEDRA, Tomás Iván
33: CL 31: 202301638 32: 2023-06-06

54: SULFUR DIOXIDE DOSING APPARATUS AND METHOD

00: -

The invention relates to an apparatus and method for dosing sulfur dioxide gas (SO_2) into wine contained in wooden barrels, which comprises: an application lance comprising a nozzle with larger holes that allow wine into the nozzle and SO_2 out of the nozzle, generating a sufficient gas flow to evenly distribute the gas inside the barrel; and a support comprising a base and feet that support the application lance on the upper wall of the barrel, near to the area containing the stopper, wherein the support for the application lance comprises a base that, in a use position, is horizontal to the barrel wall, elevated only a few centimetres from the barrel wall.

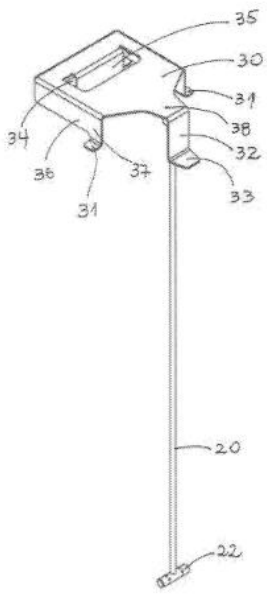

21: 2026/00166. 22: 2026/01/05. 43: 2026/09/02
51: E02F; E02D
71: CHINA HARBOUR ENGINEERING COMPANY LTD.
72: XU, HUAJIANG
33: CN 31: 2025104947850 32: 2025-04-21

54: FOUNDATION BED LEVELING METHOD

00: -

The present invention discloses a foundation bed leveling method, comprising: S1: riprapping and ramming a foundation bed, performing sea sweeping analysis to acquire pothole information of an underwater to-be-leveled region, dividing to-be-leveled region into target to-be-leveled regions according to a size of a leveler; S2: lowering the leveler to a first target to-be-leveled region, adjusting the leveler to a design elevation; S3: adding stones into a distributor boom, driving it to move, controlling a discharge port according to a pothole situation, leveling stones with a scraper after uniform stone distribution, repeatedly moving distributor boom until the target to-be-leveled region is leveled; S4: measuring an elevation, after qualified acceptance, moving the leveler to a next target to-be-leveled region; and S5: repeating the S2-S4 until all the target to-be-leveled regions are leveled, without stone distribution in an overlapped region. The invention has uniform stone distribution, high construction efficiency, and good quality.

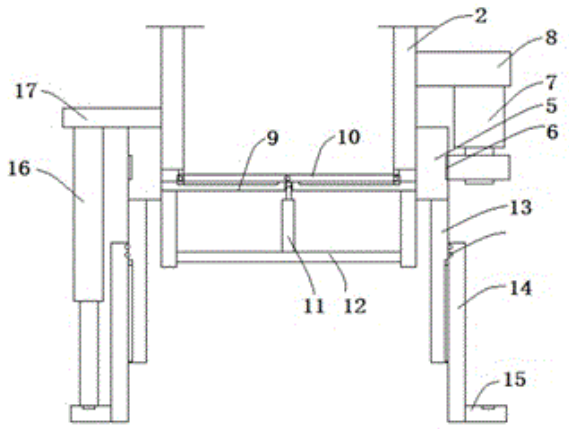

21: 2026/00167. 22: 2026/01/05. 43: 2026/09/02
51: E02B; A01G; E02F; E02D; G06T; C04B
71: CHINA HARBOUR ENGINEERING COMPANY LTD.
72: SUN, ZHUANG
33: CN 31: 2025104506275 32: 2025-04-11
54: RIVER CHANNEL DREDGING METHOD
00: -

The present invention discloses a river channel dredging method, comprising: dynamically scanning a river channel along a spiral advancing path to acquire riverbed terrain data and a sediment thickness; establishing a three-dimensional riverbed model based on the riverbed terrain data, dividing a core dredging region, a transitional maintenance region and an ecological reserve region in the three-dimensional riverbed model according to the sediment thickness; dividing the core dredging region into a surface layer, a middle layer and a bottom layer vertically, and executing a differentiated dredging; performing silt-water separation on a dredged material, purifying separated water, re-injecting the water into the river channel; laying a precast eco-concrete module on a surface of a dredged riverbed, forming a diversion trench and a biological nest, and filling the biological nest with a polylactic acid/straw composite fibrofelt containing local submerged plant seeds. The invention realizes "monitoring-planning-construction-repair" integration, accurate dredging, and improves dredging efficiency.

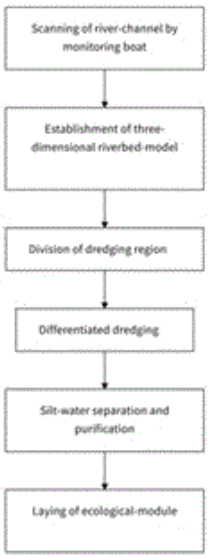

21: 2026/00168. 22: 2026/01/05. 43: 2026/09/02
51: E02B; G01C
71: CHINA HARBOUR ENGINEERING COMPANY LTD.
72: ZHAO, JUN
33: CN 31: 2025105123148 32: 2025-04-23
54: HYDRAULIC RECLAMATION CONSTRUCTION METHOD FOR DAM
00: -

The present invention discloses a hydraulic reclamation construction method for a dam, comprising: arranging multiple monitoring points in a hydraulic reclamation region; performing hydraulic reclamation construction according to a set hydraulic reclamation speed in a previous monitoring period; detecting elevation values at a starting moment and an ending moment at each monitoring point; calculating a settlement volume of each monitoring point; calculating a settlement volume of hydraulic reclamation region in previous monitoring period; when settlement volume is not less than a first settlement volume threshold, reducing a next hydraulic reclamation speed to 70-80% of a previous hydraulic reclamation speed; when the settlement volume is not greater than a second settlement volume threshold, increasing the next hydraulic reclamation speed to 1.1 to 1.3 times of previous hydraulic reclamation speed; and repeatedly executing the operations. The invention can adjust hydraulic reclamation speed, improves hydraulic reclamation effect is improved, and enhances construction quality.

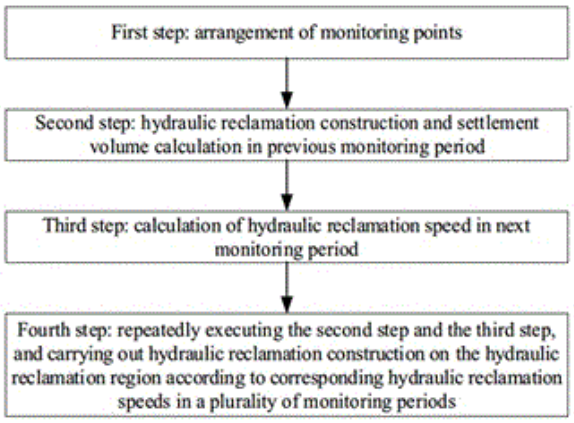

21: 2026/00170. 22: 2026/01/05. 43: 2026/09/02
51: H01R
71: CHINA HARBOUR ENGINEERING COMPANY LTD.
72: DONG, YAN
33: CN 31: 2025105761882 32: 2025-05-06

54: GROUNDING DEVICE CONSTRUCTION METHOD

00: -

The present invention relates to a grounding device construction method, comprising: vertically layering a plurality of copper bars and electrically connecting the copper bars through a mortise-and-tenon structure, embedding a grounding electrode under the copper bars in a spiral array, coating mixed gel of nanographite powder/epoxy resin/curing agent on a joint and pressurizing, and finally applying a pulse current to measure a grounding resistance, wherein an error within ±5% is deemed to be qualified. The method optimizes a stray current path through a three-dimensional network, enhances conductivity and corrosion resistance by using composite gel, and improves construction accuracy by combining with a dynamic measurement technology. The method is mainly used in a project scene with a high requirement for grounding reliability, such as a power system and a high-rise building, which significantly reduces a ground resistance and prolongs a service life of the device.

21: 2026/00171. 22: 2026/01/05. 43: 2026/09/02
51: G01N; G01D; G06Q; G06V; G06F
71: CHINA HARBOUR ENGINEERING COMPANY LTD.
72: LI, JINGJUN
33: CN 31: 2025105921186 32: 2025-05-08

54: QUALITY DETECTION METHOD FOR WHARF ARMOR BLOCK

00: -

The present invention discloses a quality detection method for a wharf armor block, comprising: constructing a surface model through a mobile three-dimensional laser scanner to identify a high-risk and defect region; using a frequency-adjustable dual-mode flaw detector to perform encrypted scanning and deep convolutional neural network detection in high-risk region to generate a three-dimensional defect distribution map; performing a compression strength test on a core sample drilled in defect region, analyzing a material property by combining a non-contact infrared spectrum; establishing a dynamic evaluation model, calculating a safety factor by integrating surface defect, internal defect and material discreteness data and generating a three-dimensional visualization report. The invention solves problems of low efficiency, insufficient positioning accuracy of internal defect and one-sided material property evaluation, realizes full-dimensional detection through a multi-source data fusion and closed-loop feedback mechanism, and improves a reliability of structural safety evaluation and a scientificity of maintenance decision.

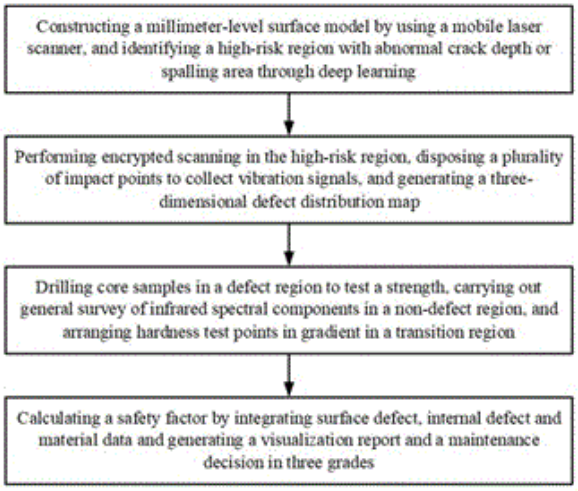

21: 2026/00172. 22: 2026/01/05. 43: 2026/09/02
51: E02D
71: CHINA HARBOUR ENGINEERING COMPANY LTD.
72: LIU, BAOHE
33: CN 31: 2025106775327 32: 2025-05-23

54: CAISSON PREFABRICATION METHOD

00: -

The present invention discloses a caisson prefabrication method, comprising: performing a first layer of concrete pouring to obtain a first pouring layer; compacting by vibration, based on a first adjustment strategy, adjusting a vibrating compaction parameter according to an ultrasonic wave speed inside first pouring layer, first adjustment strategy comprising: when wave speed is below a first wave speed threshold, adjusting a vibrating duration to 1.2 to 1.5 times of a preset vibrating duration, adjusting a vibration frequency to be increased by 10-20 cycles per minute from a preset vibration frequency, when wave speed exceeds a second wave speed threshold, adjusting vibrating duration to 70% to 80%, vibration frequency is adjusted to be reduced by 10-15 cycles per minute; performing next concrete pouring on first pouring layer; based on first adjustment strategy, adjusting vibrating compaction parameter inside the next pouring layer. The present invention improves construction quality.

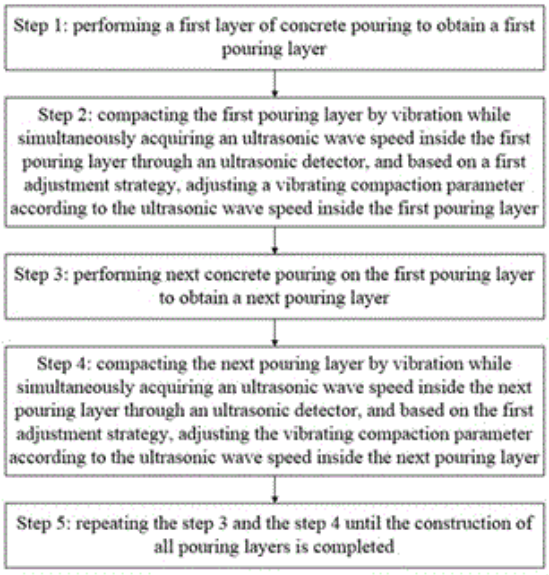

21: 2026/00174. 22: 2026/01/05. 43: 2026/09/02
51: G01C; G08B; G01B; G01F; G01S; G06F
71: CHINA HARBOUR ENGINEERING COMPANY LTD.
72: HE, JUNBIAO
33: CN 31: 2025106987674 32: 2025-05-28
54: METHOD FOR MONITORING SETTLEMENT OF DIKE
00: -

The present invention discloses a settlement monitoring method for dike, which belongs to the technical field of water conservancy project safety monitoring. The method includes: arranging a longitudinal monitoring section on the leeward slope of the dike, deploying a three-line fiber Bragg grating sensor array, and periodically collecting vertical displacement and horizontal inclination data through a synchronous triggering unit; establishing a vertical displacement-horizontal inclination joint analysis model by using a multi-source data fusion module, eliminating tidal interference through a Kalman filtering algorithm to generate a settlement distribution curve; triggering a three-level to first-level early warning signal based on a hierarchical early warning rule and transmitting the signal to a terminal device. The present invention solves the problems that traditional monitoring methods cannot effectively separate tidal interference, have poor real-time performance and insufficient multi-dimensional data collaborative analysis. By means of multi-line sensor deployment, dynamic filtering optimization and hierarchical early warning mechanism, the present invention realizes high-precision settlement monitoring, anti-interference in complex environments and rapid emergency response, and significantly improves the reliability and timeliness of dike safety monitoring.

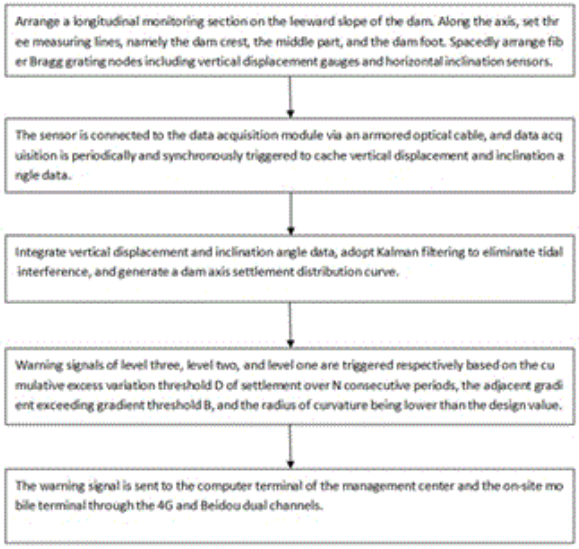

21: 2026/00175. 22: 2026/01/05. 43: 2026/09/02
51: E02B; E02D

71: CHINA HARBOUR ENGINEERING COMPANY LTD.
72: XU, QINGYUN
33: CN 31: 2025107480224 32: 2025-06-05
54: HIGH-PILE WHARF STRUCTURE AND CONSTRUCTION METHOD THEREOF
00: -
The present invention discloses a high-pile wharf structure, which is installed on a matrix distribution of several steel pipe piles. The steel pipe piles are cylindrical structures with internal core-filled concrete, comprising: a plurality of parallel and identically sized track beams, wherein the track beams are fixed to the upper ends of a row of steel pipe piles, extending from the shoreline towards the sea side, and the upper surface of the track beams is equipped with slide rails; a plurality of superstructures horizontally joined together, each superstructure including at least two main beams, each of which corresponds to a track beam, and the main beams can be slidably placed on the slide rails, with several vertically penetrating post-pouring holes spaced apart along the main beams. The gaps between the main beams and the corresponding track beams are concreted in the same batch as the post-pouring holes. The present invention also discloses a construction method for the high-pile wharf structure, which systematically introduces the building translation method into the field of high-pile wharf construction, filling the application gap of the translation method in discrete pile foundation wharf projects.

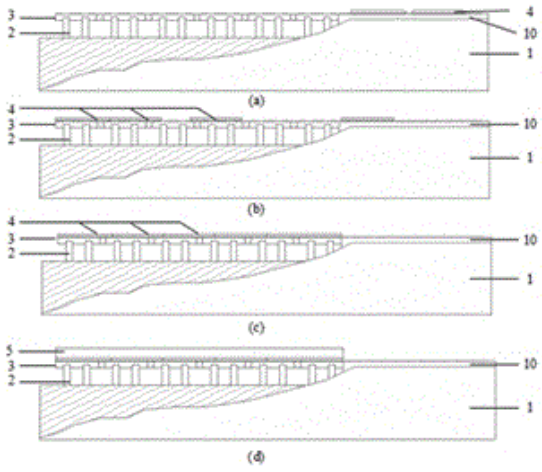

21: 2026/00176. 22: 2026/01/05. 43: 2026/09/02
51: E02B; E03F

71: CHINA HARBOUR ENGINEERING COMPANY LTD.
72: HU, WEIMING
33: CN 31: 2025107591867 32: 2025-06-09
54: COASTAL PROTECTION STRUCTURE AND CONSTRUCTION METHOD THEREOF
00: -
The present invention discloses a construction method for a coastal protection structure, which comprises the following steps: First, after excavating a foundation trench, an alternating composite layer composed of sand and gravel is laid in layers and then compacted. Next, a precast reinforced concrete frame structure is installed on the surface. The polygonal frame units are connected by pre-embedded threaded steel bars. The through - holes are filled with high-density polyethylene particles and then covered with a steel wire mesh. To enhance the overall integrity, anchor bars are welded in combination with a bidirectional steel bar mesh sheet. Meanwhile, a drainage blind ditch is set up on the side away from the sea. This drainage blind ditch contains a drainage pipe wrapped with double - layer permeable geotextile. A drainage pipe with a longitudinal slope of not less than 5% is used to extend below the low - tide level, thus forming a multi - directional drainage path. This method is applicable to the protection of coastals with frequent tidal differences. It can effectively reduce the risk of the foundation being undermined, inhibit the dispersion of fillers, and adapt to uneven settlement of the foundation, and at the same time maintain the ecological function of the intertidal zone.

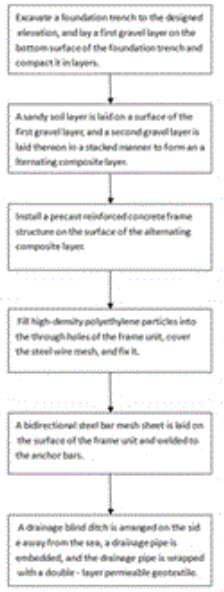

21: 2026/00177. 22: 2026/01/05. 43: 2026/09/02
51: E02D
71: CHINA HARBOUR ENGINEERING COMPANY LTD.
72: YANG, JIAYAN
33: CN 31: 2025107817416 32: 2025-06-12
54: METHOD FOR CONSTRUCTING A WAVE WALL
00: -
The present invention discloses a method for constructing a wave wall, comprising the steps of: after completing the excavation of the wave wall foundation, setting up a group of vibration sensors at intervals of 5-8 meters along the longitudinal axis of the foundation; compacting the foundation in layers using a tamping equipment, with an intelligent controller receiving real-time vibration frequency data from the vibration sensor cluster, and when the difference in vibration frequency between adjacent sensor groups exceeds 15-20Hz, controlling the tamping equipment to increase the number of compaction passes in the area with abnormal frequency by 2-3 times; setting up weighing sensors and aggregate moisture content detectors at the concrete mixing plant, with the weighing sensors monitoring the weight ratio of cement, coarse aggregate, and fine aggregate in real-time; using a concrete delivery pump equipped with a flowmeter for the pouring operation, and immediately inserting a vibration rod after each layer of pouring is completed; during the vibration operation, the intelligent controller receives acceleration sensor data from the handle of the vibration rod. The present invention is capable of solving problems such as uneven compaction of the foundation, deviation in concrete mix proportions, and unstable vibration effects during the construction of wave walls.

21: 2026/00199. 22: 2026/01/06. 43: 2026/10/20
51: A01C
71: HUAINAN NORMAL UNIVERSITY, DINGYUAN TIANHE AGRICULTURAL MACHINERY SERVICE COOPERATIVE
72: WANG, Changgui, SHI, Cui'e, CHEN, Guang
54: FERTILIZATION DEVICE FOR RICE CULTIVATION
00: -
The present invention discloses a fertilization device for rice cultivation, comprising a storage box connected at its bottom to a fertilization component. A grinding component is arranged inside the storage box and includes a rotating double cone grinding block and grinding plates on both inner side walls. The top of each grinding plate features a grinding groove that cooperates with the conical surfaces of the grinding block. As the grinding block rotates, a dynamic shear and grinding effect is produced between the grinding grooves and the cone surfaces, efficiently crushing clumped water-soluble fertilizer into fine particles or powder. This significantly increases the contact area with water, promoting rapid and thorough dissolution. The system ensures a uniform fertilizer concentration in the solution delivered by the fertilization component, overcoming issues of slow dissolution and uneven nutrient distribution, thereby meeting agronomic requirements and improving fertilization efficiency in rice fields.

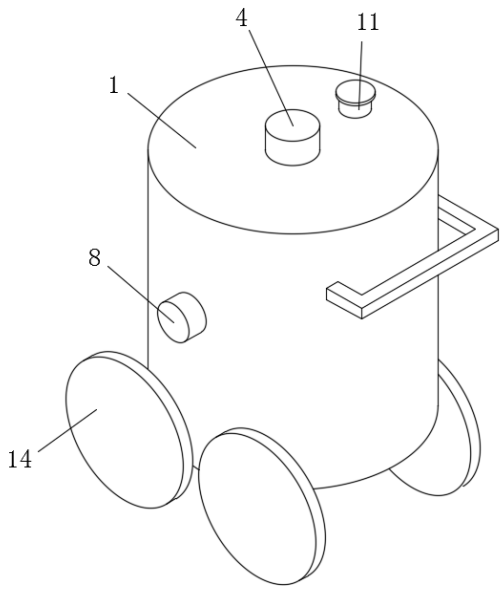

21: 2026/00200. 22: 2026/01/06. 43: 2026/10/20
51: G06N; G16H
71: JIANGSU COLLEGE OF NURSING
72: DING, Xu, SUN, Zhiyao, FAN, Na, ZHU, Li, TAN, Dongming
33: CN 31: 2025110893519 32: 2025-08-05
54: ARTIFICIAL INTELLIGENCE BASED PHARMACEUTICAL SERVICE PROMOTION ANALYSIS METHOD
00: -
The present invention discloses an artificial intelligence-based pharmaceutical service promotion analysis method. The method includes medical text preprocessing using a domain-adapted BioBERT or PubMedBERT model to extract deep semantic features and map terms to a unified medical ontology based on UMLS and ICD-11. It calculates the probability and entropy-limited relevance of uncommon symptoms using a three-stage similarity fusion and discriminant weighting for clustering distance measurement. A density-adaptive DBSCAN clustering algorithm dynamically adjusts neighborhood radius and threshold based on the k-distance curve and validates intra-cluster consistency via contour coefficients, filtering outliers and reclassifying them. Finally, epidemic prediction and drug recommendation are performed using real-time regional inventory data, enabling personalized reserve planning and prescription rule enforcement for high-risk drugs. The method enhances pharmaceutical service efficiency through precise medical data interpretation, adaptive clustering, and responsive supply chain analysis.

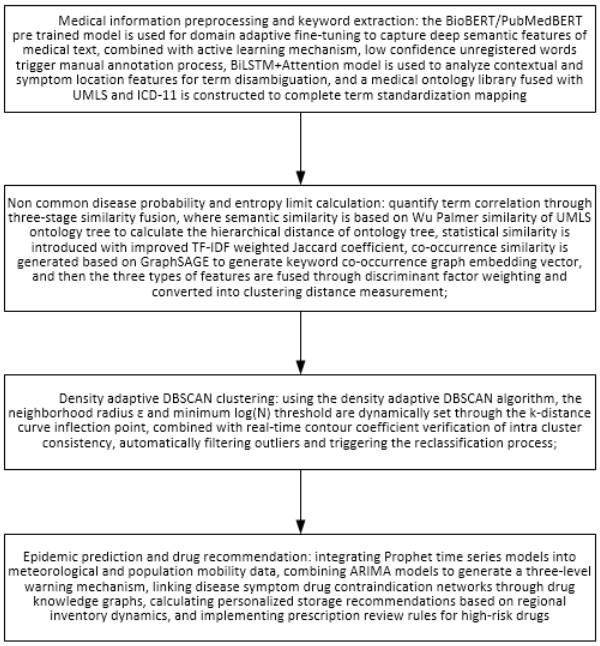

21: 2026/00232. 22: 2026/01/06. 43: 2026/09/03
51: A41D
71: George TFE SCP
72: STOREY, Piers Christian, ROGERS, James, LLOYD, John
33: EP(MC) 31: 23186243.4 32: 2023-07-18
54: IMPACT-ABSORBING PAD AND RELATIVE GARMENT
00: -
Impact-absorbing pad (1) for a garment (100) having a body made of an elastic material and comprising a plurality of holes (3) that pass-through its thickness (T) from an outer surface (6) to an inner surface (5) and a plurality of hinge portions (17) arranged between adjacent holes (3), wherein the pad (1) comprises a central part (C) and a peripheral part (P), and the peripheral part (P) comprises a stitching part (S) arranged close to a perimetral edge (10) of the pad (1), wherein the thickness (T) of the pad (1) is greater in correspondence of the central part (C) than in correspondence of the stitching part (S); and wherein the pad (1) is configured such that: at rest, the holes (3) have a shape with a central portion (8) that is narrower than its end portions (7); and, when the impact-absorbing pad (1) is pulled according to an in-plane direction, the central portion (8) of the

holes (3) arranged along this direction widen and the adjacent hinge portions (17) rotate.

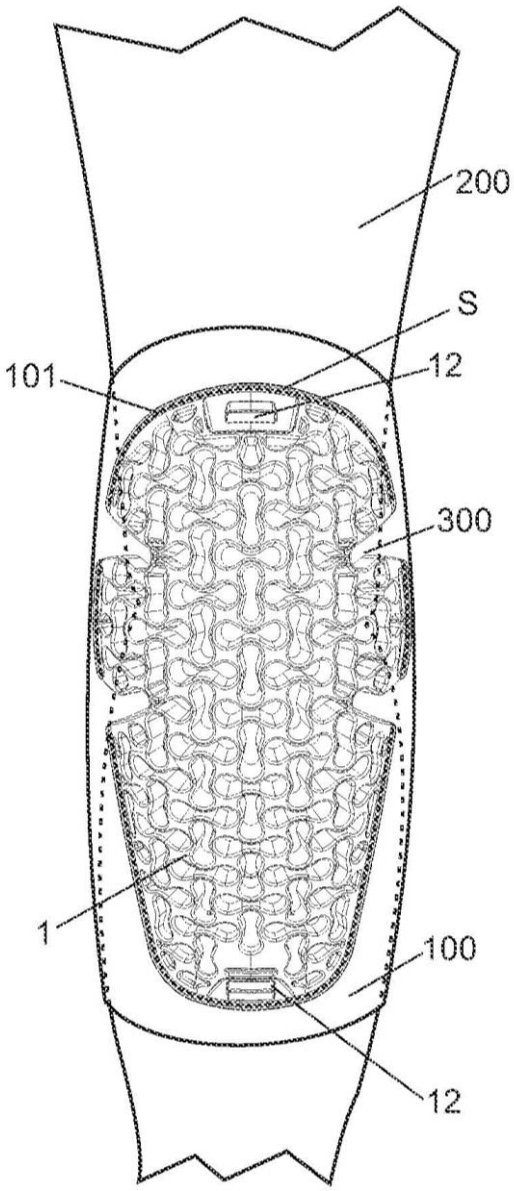

21: 2026/00234. 22: 2026/01/06. 43: 2026/09/03
51: A41D
71: George TFE SCP
72: STOREY, Piers Christian, ROGERS, James, LLOYD, John
33: EP(MC) 31: 23186243.4 32: 2023-07-18
54: PROTECTIVE ARTICLE AND RELATIVE GARMENT
00: -
Protective article (1) for protecting a part of a human body (200), preferably an articulation (300) of the human body (200), comprising a slender body (2) made of an elastic material comprising a plurality of holes (3) that pass-through the body (2) from an outer surface (6) to an inner surface (5) and a plurality of hinge portions (17) arranged between adjacent holes (3), characterized in that the body (2) is configured such that: at rest, the holes (3) have a shape with a central portion (8) that is narrower than its end portions (7); and when the protective article (1) is pulled according to an in-plane direction, the central portion (8) of the holes (3) along this direction widen and the adjacent hinge portions (17) rotate.

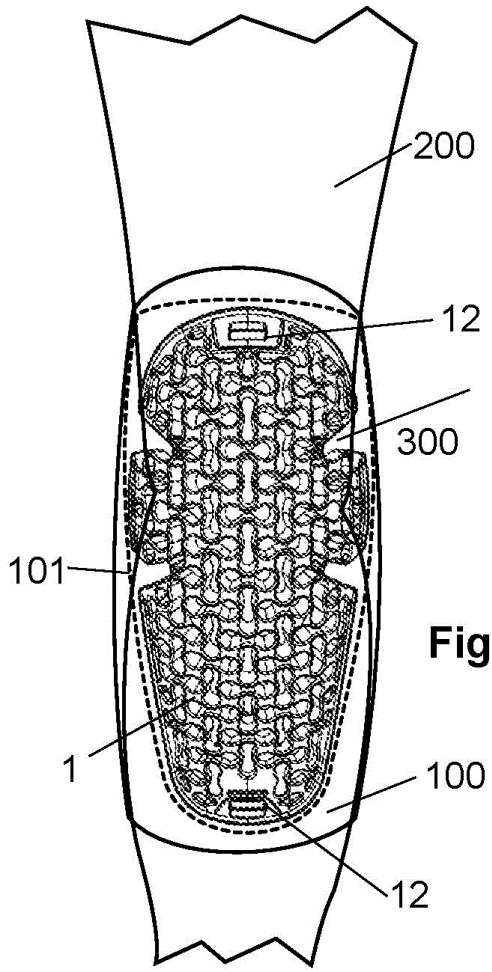

Fig. 7

21: 2026/00238. 22: 2026/01/06. 43: 2026/09/09
51: C08J
71: Ioniqa Solutions B.V.
72: GRAVENDEEL, Jannigje Maria Jacomina, WOUTERS, Fabian
33: NL 31: 2035061 32: 2023-06-09
54: A METHOD OF REMOVING ETHYLENE VINYL ALCOHOL COPOLYMER FROM A WASTE POLYMER MATERIAL

00: -
A method of removing ethylene vinyl alcohol copolymer from a waste polymer material that comprises polyester and ethylene vinyl alcohol copolymer is described. The method comprises providing the waste polymer material in shredded or cut form; contacting the waste polymer material in shredded or cut form with an alcoholic solvent at a temperature from 80 to 170°C to dissolve the ethylene vinyl alcohol copolymer at least partly in the alcoholic solvent while the polyester remains substantially unaffected; separating the polyester from the solvent mixture comprising the alcoholic solvent and the vinyl alcohol copolymer dissolved therein by solid-liquid separation; precipitating the dissolved vinyl alcohol copolymer in the solvent mixture; separating the precipitated vinyl alcohol copolymer from the solvent mixture to vinyl alcohol copolymer and used alcoholic solvent. A method for depolymerizing the polyester from the waste polymer multilayer article is also described.

21: 2026/00247. 22: 2026/01/07. 43: 2026/09/03
51: G10L
71: Tianjin Agricultural University
72: Changxi CHEN, Bowen SUN, Xiangchao KONG, Wanchao ZHANG, Guangyu ZHAO, Kaisi YANG, Xingkai PENG
33: CN 31: 202511414524.X 32: 2025-09-29
54: SINGLE-CHANNEL NON-REAL-TIME SPEECH ENHANCEMENT METHOD BASED ON TAYLOR MODEL, COMPUTER STORAGE MEDIUM, AND PRODUCT
00: -
The present disclosure discloses a single-channel non-real-time speech enhancement method based on a Taylor model, a computer storage medium, and a product. The method includes the following steps: S1, acquiring and preprocessing noisy speech data; S2, constructing a novel TaylorSENet neural network model, where the novel TaylorSENet neural network model includes a zero-order block, a high-order block, and an adaptive order selection module; S3, enhancing the preprocessed noisy speech data in S1 by using the novel TaylorSENet neural network model in S2, and outputting an enhanced complex spectrum; and S4, training the novel TaylorSENet neural network model in S2 until a learning rate remains unchanged. According to the present disclosure, by construction of the novel TaylorSENet neural network model, multi-scale feature encoding, and adaptive computation order selection, the method significantly reduces computational complexity and reasoning time while maintaining a high speech enhancement performance, thus achieving intelligent allocation of computing resources according to an input signal-to-noise ratio.

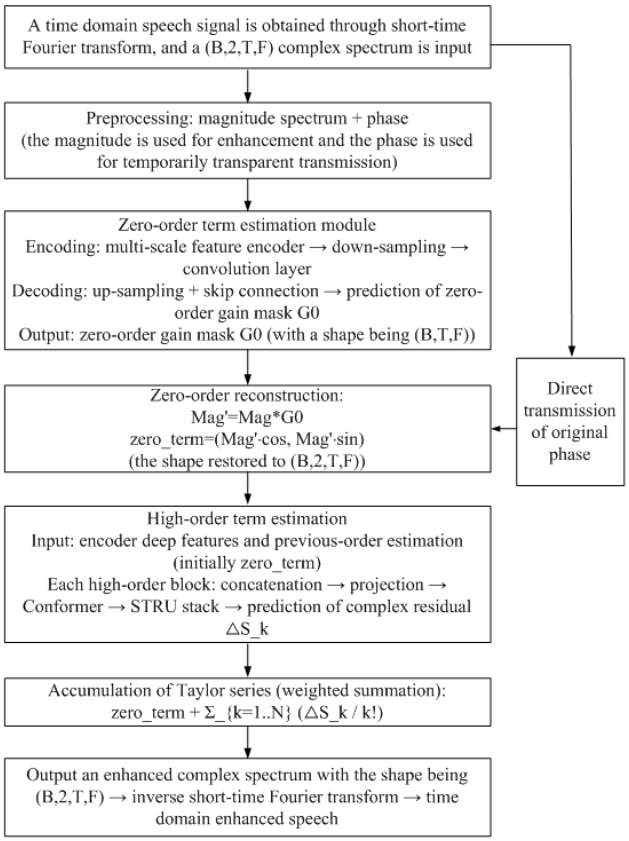

21: 2026/00256. 22: 2026/01/07. 43: 2026/09/03
51: B01D
71: TIANJIN GEOENVIRON ENGINEERING & TECHNOLOGY CO., LTD., BEIJING GEOENVIRON ENGINEERING & TECHNOLOGY, INC.
72: DU, GANG, XIN, YANBING, CHEN, JUN, YANG, QINGBIN
54: APPARATUS AND METHOD FOR CONDITIONING AND DESANDING ORGANIC WASTE SLURRY
00: -
Disclosed is an apparatus for conditioning and desanding organic waste slurry, including: a buffer tank, a hydrocyclone, a sand collection tank, and a sand lifting screw, wherein the buffer tank is configured to receive organic waste slurry to be conditioned; a bottom discharge outlet of the buffer tank is connected to a feed inlet of the hydrocyclone

through a circulation pump; a top return port of the hydrocyclone is connected to a top feed inlet of the buffer tank; a bottom discharge outlet of the hydrocyclone is connected to a top feed inlet of the sand collection tank through a glass tube; a bottom discharge outlet of the sand collection tank is connected to the sand lifting screw; a first valve is provided at a feed inlet of the sand collection tank; and a second valve is arranged at a discharge outlet of the sand collection tank. According to the present disclosure, organic waste leachate may be diluted and heavy material impurities therein may be separated, thereby facilitating treatment in subsequent processes and devices; and the apparatus has the characteristics of an excellent separation effect, a simple system, low energy consumption, safe and reliable operation, and simple and convenient maintenance and operation.

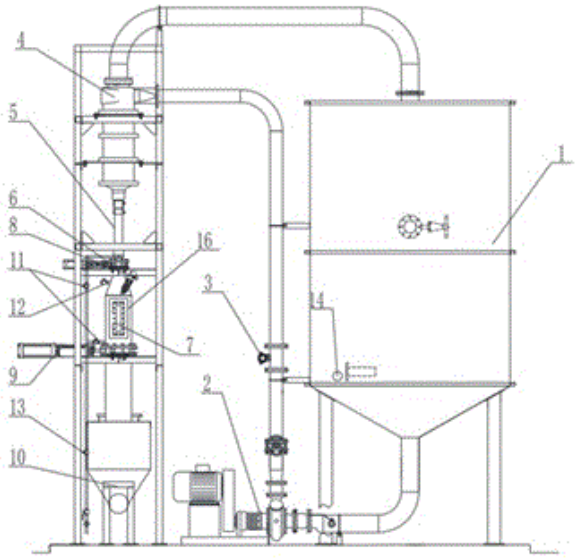

21: 2026/00271. 22: 2026/01/07. 43: 2026/09/03
51: A01N; C07D
71: Syngenta Crop Protection AG
72: SCARBOROUGH, Christopher Charles, POULIOT, Martin, FINKBEINER, Peter, GERMAIN, Nicolas, LE CHAPELAIN, Camille
33: EP(CH) 31: 23187004.9 32: 2023-07-21
54: BENZIMIDAZOLE DERIVATIVES
00: -
The current invention relates to compounds of the formula (I) wherein the substituents are as defined in claim 1, to processes and methods for preparing compounds of formula (I), to agrochemical compositions comprising compounds of formula (I) as defined in claim 1, to preparation of these compositions and to the use of the compounds or compositions in agriculture or horticulture for combating, preventing or controlling infestation of plants, harvested food crops, seeds or non-living materials by phytopathogenic microorganisms, in particular fungi.

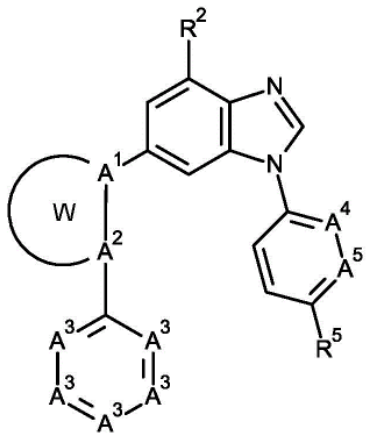

(I)

21: 2026/00303. 22: 2026/01/08. 43: 2026/09/03
51: B65D
71: BUFFALO SECURE (PTY) LTD.
72: ADAMS, Eric Martin
33: ZA 31: 2024/07611 32: 2024-10-08
54: REUSABLE STRAP TO SECURE PALLETIZED GOODS
00: -
A securing belt or strap for goods on a pallet is provided, the strap comprising at least two spaced apart canvas panels; elastic means between the at least two spaced apart canvas panels; and adjustable end securing means, to secure the ends of the panels together, around the goods on the pallet. In an embodiment, each elastic means comprises at least one elastic element, but typically a pair of elastic elements between the two spaced apart canvas panels, to accommodate various sizes of goods on the pallet. In an embodiment, the end securing means comprises a first securing arrangement on one end of the strap and a second securing arrangement on the other, opposite end of the strap, to enable the strap to be securely and snugly wrapped around the goods on the pallet.

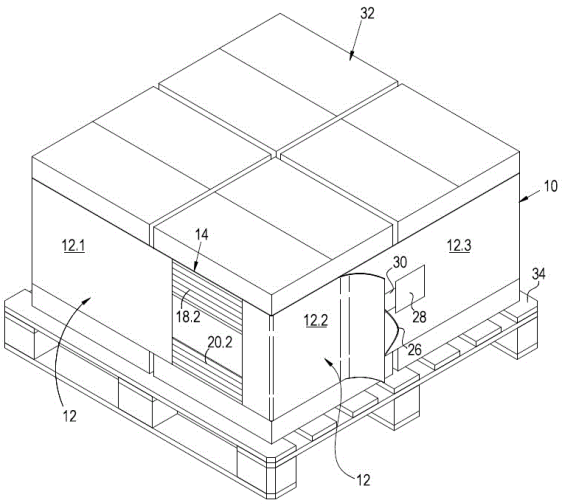

21: 2026/00309. 22: 2026/01/08. 43: 2026/09/10
51: A01M
71: RAS CONSULT (PTY) LTD
72: RAS, Marthinus Christoffel David
54: METHODS AND SYSTEMS FOR AGRICULTURAL SPRAYING
00: -
Methods and systems for agricultural spraying are provided. The methods and systems may be suitable for spraying a fluid onto a plant with a sprayer moving along a pathway adjacent an arrangement of multiple plants. The methods may include obtaining a target location, a current position and a speed of movement of the sprayer. The sprayer may be configured to be at least partially rotatable to spray fluid at variable angles in use. The methods may include adjusting an angular orientation of the sprayer based on the current position and the speed of movement of the sprayer, so that the sprayer is directed towards the target location whilst the sprayer is moving along the pathway.

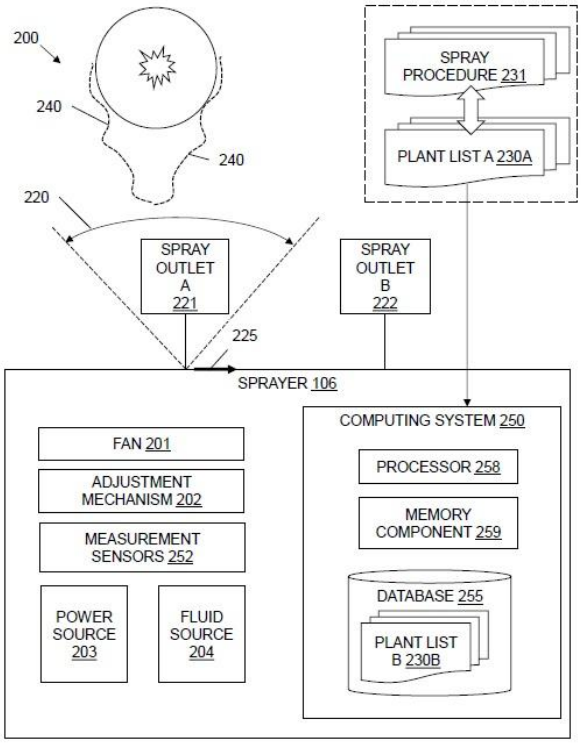

21: 2026/00353. 22: 2026/01/09. 43: 2026/09/03
51: C07K; C12N
71: Krystal Biotech, Inc.
72: KRISHNAN, Suma, PARRY, Trevor, PREVITE, Dana Michelle, DUERMEYER, Mary Jane
33: US 31: 63/170,103 32: 2021-04-02
54: VIRAL VECTORS FOR CANCER THERAPY
00: -
The present disclosure provides recombinant nucleic acids comprising one or more polynucleotides encoding an immunomodulatory polypeptide (*e.g.*, a pro-inflammatory cytokine such as a human IL- 2 or IL- 12 polypeptide); viruses comprising the recombinant nucleic acids; compositions and formulations comprising the recombinant nucleic acids and/or viruses; methods of their use (*e.g.*, for the treatment of cancer, such as lung cancer); and articles of manufacture or kits thereof.

21: 2026/00359. 22: 2026/01/09. 43: 2026/09/08
51: H04N
71: GUANGDONG OPPO MOBILE TELECOMMUNICATIONS CORP., LTD.
72: GAN, JONATHAN, YU, YUE
33: US 31: 63/364,713 32: 2022-05-13
33: US 31: 63/363,804 32: 2022-04-28
54: SUBBLOCK CODING INFERENCE IN VIDEO CODING
00: -
A method for decoding a video bitstream is disclosed. A decoder infers sb coded flags for a

subblock of a transform block to determine whether a transform skip is applied or whether a transform skip residual coding process is disabled. The method comprises the step of determining, for a subblock of a current transform block, whether a first flag specifying whether a transform skip is applied to the transform block is 0 or a second flag specifying whether a transform skip residual coding process is disabled is equal to 1. Other steps involve, in response to determination of values for the first and second flags and whether a sb coded flag for the subblock is/is not present, inferring the flag sb coded flag for the subblock to be a first or second value in response to determining whether or not certain conditions are true. Further steps involve determining a context index for an arithmetic decoding process used for decoding the sb coded flag for the subblock based upon the sb coded flag of previous subblocks; decoding the sb coded flag for the subblock according to the arithmetic decoding process; and decoding at least a portion of the bitstream based on the determined sb coded flag.

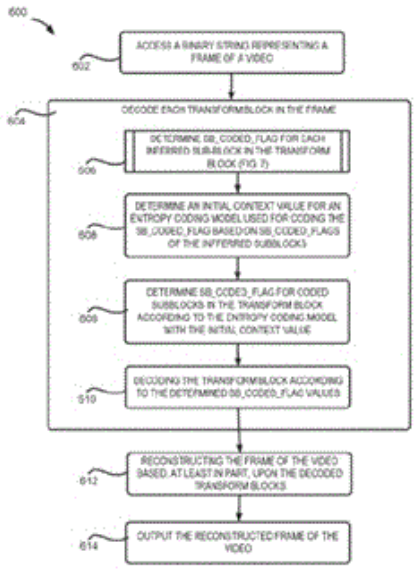

21: 2026/00364. 22: 2026/01/09. 43: 2026/10/06
51: E04F
71: CCCC Second Highway Engineering Co., Ltd.
72: WANG, Yaolong, MA, Jianhua, ZHOU, Bin, FAN, Shengtong, LI, Wei, PAN, Bobo, ZHANG, Jiahao, LIU, Shangwei, CHEN, Yongzhou, JIANG, Dahai, MA, Xinxin, YANG, Wenhui, ZHANG, Qi, HE, Xiangwen
33: CN 31: 202511916493.8 32: 2025-12-18

54: PEBBLE-CONTAINING LOW-REBOUND SHOTCRETE AND CONSTRUCTION METHOD THEREFOR

00: -

The present disclosure discloses a pebble-containing low-rebound shotcrete and a construction method therefor, which relates to the technical field of shotcrete. The shotcrete comprises, in parts by weight: 100-150 parts of cement; 500-600 parts of pebbles; 100-200 parts of fine sand; 3-7.5 parts of accelerator; 1-3 parts of water reducer; 50-80 parts of water; and 2-5 parts of functional admixture. The pebbles are alkali-washed and blended in a 1:3-10 ratio of [2, 5] mm to [5, 12] mm size fractions. The construction method comprises pebble pretreatment, stepwise mixing, spraying with dynamic accelerator addition, and precision curing. Through optimized pebble gradation and fiber synergy, issues of low bonding strength and high rebound rate in pebble shotcrete are resolved. This achieves a rebound rate of less than or equal to 10 percent, a 28-day compressive strength of greater than or equal to 50 MPa, and a low pipe blocking rate, making it suitable for engineering applications such as tunnel support and slope reinforcement.

21: 2026/00368. 22: 2026/01/09. 43: 2026/09/03
51: C21D; C22C
71: Baoshan Iron & Steel Co., Ltd.
72: ZHAO, Sixin, GAO, Jiaqiang, HUANG, Zongze
33: CN 31: 202310723459.3 32: 2023-06-19

54: HIGH-STRENGTH, HIGH-TOUGHNESS AND HIGH-HARDENABILITY GEAR SHAFT STEEL, AND MANUFACTURING METHOD THEREFOR

00: -

Disclosed in the present invention is a high-strength, high-toughness and high-hardenability gear shaft steel. The steel contains Fe and inevitable impurities, and the following chemical elements in percentage by mass: C: 0.16%-0.22%, Si: 0.10%-0.40%, Mn: 0.86%-1.24%, Cr: 0.95%-1.44%, Al: 0.02%-0.05%, Ti: 0.015%-0.039%, Nb: 0.001%-0.034%, N: 0.006%-0.015%, and B: 0.0006%-0.0034%, wherein a microalloying element coefficient r_{MA} of the steel ranges from 1.5 to 5.0, and $r_{MA}=\{10*[Nb]/93+[Ti]/480+[\lambda]/27\}/([N]/14)$. In addition, further disclosed in the present invention is a manufacturing method for the high-strength, high-toughness and high-hardenability gear shaft steel. The high-strength, high-toughness and high-hardenability gear shaft steel of the present invention has high hardenability, narrow hardenability bandwidth, and good high-temperature grain stability.

21: 2026/00485. 22: 2026/01/13. 43: 2026/09/09
51: A61M
71: Elipse Health Ltd
72: RUPRA, Perminder, ROWE, Andrew
33: GB 31: 2310028.2 32: 2023-06-30

54: FLUID APPLICATORS

00: -

The invention provides an applicator suitable for applying a fluid, such as an antiseptic fluid, to the skin of a subject. The applicator comprises a handle

(4) that can be used more than once and a head (2) that is removable from the handle (4) for safe disposal after each use of the applicator. The head (2) can move along the handle (4) from a first position, in which it is releasably secured to the handle (4) and is isolated from a source of fluid, to a second position, in which it is releasably secured to the handle (4) and is in communication with the source of fluid. After use, the head (2) can be moved to a third position, in which it is released from the handle (4). The head (2) may engage the handle (4) via a track (14) that extends along only said one side of the handle (4) to minimize the quantity of material that is required in the disposable head (2).

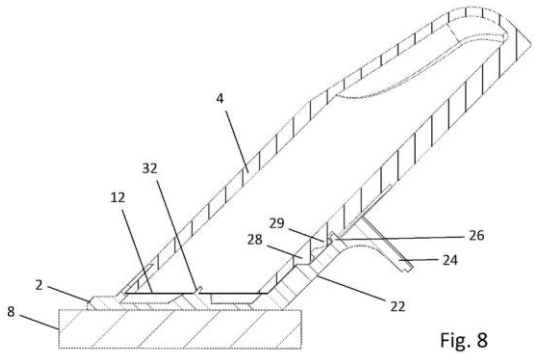

Fig. 8

21: 2026/00492. 22: 2026/01/13. 43: 2026/09/07
51: C12N
71: Yimuhe Hangzhou Biotechnology Co., Ltd
72: XIE, Anyong, CHEN, Ruodan, YANG, Yi
33: CN 31: 202310739608.5 32: 2023-06-21
54: METHOD FOR IMPROVING EFFICIENCY AND ACCURACY OF GENE KNOCK-IN USING NON-RESIDENCE END OF CPF1
00: -
A method for improving the efficiency and accuracy of gene knock-in using the non-residence end of Cpf1, wherein the free end of a target DNA and the free end of a donor DNA are generated using single or paired Cpf1, and combined with a complementary 5'-sticky end generated by Cpf1, so as to realize a more efficient and more accurate gene knock-in based on c-NHEJ. The method can perform NHEJ repair more efficiently and more accurately, the efficiency can be increased by nearly two times, and the accuracy can be increased from 0% to 100%. The free end of Cpf1 binds to and is protected by NHEJ core factor KU70/KU80, thereby making the ligation via NHEJ more efficient and accurate, which provides a foundation for the use of the free end of Cpf1 to improve the efficiency and accuracy of gene knock-in based on NHEJ, realizes gene knock-in or gene correction, and is suitable for non-dividing cells.

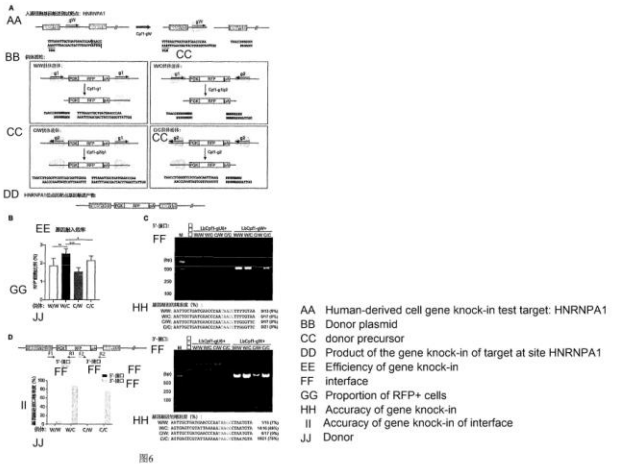

图6

21: 2026/00504. 22: 2026/01/13. 43: 2026/09/07
51: A61K
71: NANJING UNIVERSITY OF CHINESE MEDICINE
72: JI, WENXIN, MAO, XIANG, LI, JINHUI, HAN, JU , ZHANG, SEN, XU, TINGTING, CHEN, LIANGLIANG, HAN, JING, LIU, FENG, ZHANG, YANQING, GUO, SHENG, DUAN, JINAO
33: CN 31: 202510482469.1 32: 2025-04-17
54: USE OF A FORMONONETIN DERIVATIVE IN THE PREPARATION OF A DRUG FOR PREVENTING AND TREATING ACUTE LUNG INJURY
00: -
The present invention relates to a novel medical use of a formononetin derivative, namely formononetin-7-O-(6-O-succinyl)-D-glucoside (formononetin-7-O-(6-O-succinyl)-D-glucoside), specifically to the use of the formononetin derivative in the preparation of a drug for preventing and treating acute lung injury. Pharmacological experimental results have confirmed that, compared with its prototype formononetin, the formononetin derivative, namely formononetin-7-O-(6-O-succinyl)-D-glucoside, alleviates the occurrence and progression of lung injury in model animals to varying degrees across different indicators; and it reduces inflammation-induced damage to lung epithelial cells in vitro. Therefore, the derivative can be used in the

preparation of a drug for treating lung injury, especially a drug for treating acute lung injury.

21: 2026/00530. 22: 2026/01/14. 43: 2026/09/10
51: A61M
71: Janssen Biotech, Inc.
72: OLSON, Lorin, VOJAN, Vaclav, PFRANG, Juergen E., KRULEVITCH, Peter, WANG, Jingli, FOLEY, Nicholas, ZHAO, Mingqi, TASHJIAN, Paul
33: US 31: 13/833,978 32: 2013-03-15
54: PALM ACTIVATED DRUG DELIVERY DEVICE
00: -
A device configured to administer a medication can comprise a lower housing that includes a housing latch. The device can further comprise a needle guard that is movable relative to the lower housing along a first direction from a first position to a second position so as to expose a needle, and an upper housing supported relative to the lower housing. The upper housing can be configured to move with respect to the lower housing along a second direction from a pre-use position to a dispensed position. The housing latch can releasably interfere with the upper housing when the upper housing is in the pre-use position so as to prevent the upper housing from moving toward the dispensed position, and the movement of the needle guard toward the second position, causes the interference to be removed, thereby allowing the upper housing to move toward the second position.

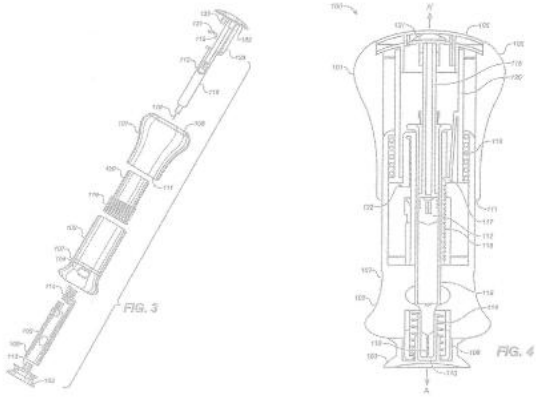

21: 2026/00531. 22: 2026/01/14. 43: 2026/09/10
51: A61M
71: Janssen Biotech, Inc.
72: OLSON, Lorin, VOJAN, Vaclav, PFRANG, Juergen E., KRULEVITCH, Peter, WANG, Jingli, FOLEY, Nicholas, ZHAO, Mingqi, TASHJIAN, Paul
33: US 31: 13/833,978 32: 2013-03-15
54: PALM ACTIVATED DRUG DELIVERY DEVICE
00: -
A device configured to administer a medication can comprise a lower housing that includes a housing latch. The device can further comprise a needle guard that is movable relative to the lower housing along a first direction from a first position to a second position so as to expose a needle, and an upper housing supported relative to the lower housing. The upper housing can be configured to move with respect to the lower housing along a second direction from a pre-use position to a dispensed position. The housing latch can releasably interfere with the upper housing when the upper housing is in the pre-use position so as to prevent the upper housing from moving toward the dispensed position, and the movement of the needle guard toward the second position, causes the interference to be removed, thereby allowing the upper housing to move toward the second position.

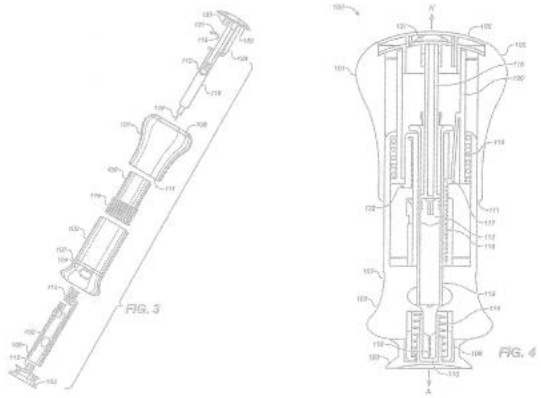

21: 2026/00545. 22: 2026/01/14. 43: 2026/09/07
51: B23K; B65G
71: CLIMACO, Francelino Jose De Sousa
72: CLIMACO, Francelino Jose De Sousa
33: AU 31: 2023902268 32: 2023-07-15
54: CONVEYOR BELT SCRAPER
00: -
A scraper (60) or cleaner tip for a belt (11) of a conveyor belt machine (10) has a holding body (62) made of a first metal or alloy material. The holding body is configured or adapted for connecting to a mounting assembly (20) of the conveyor belt machine. The scraper also has a scraper element (64) joined to the holding body. The scraper element is configured or adapted for scraping from the belt

any conveyed material (12) which has adhered to the belt. The scraper element has a single tungsten carbide blade (70) joined by brazing to a backing strip (66). The backing strip is made of a second metal or alloy material which is the same or similar in its thermal properties to the first metal or alloy material of the holding body. The backing strip of the so assembled scraper element (64) is then joined to the holding body. The scraper provided hereby is such that the single tungsten carbide blade extends substantially the length of the holding body.

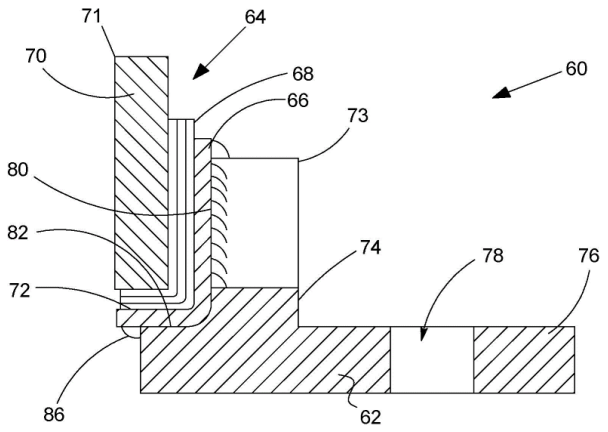

21: 2026/00552. 22: 2026/01/14. 43: 2026/10/20
51: G06V
71: JINGGANGSHAN UNIVERSITY
72: PENG, Shuo, WU, Haitao, YUAN, Minjie
54: PEST AND DISEASE IDENTIFICATION AND PREDICTION ALGORITHM BASED ON DEEP LEARNING
00: -
Disclosed is a pest and disease identification and prediction algorithm based on deep learning, which comprises the following steps: 1, material selection; 2, construction of the pest and disease category dataset; 3, construction of the pest and disease identification model; 4, construction of the pest and disease occurrence pattern dataset; 5, construction of the pest and disease prediction model; Step 6, construction of the pest and disease identification and prediction system. This invention proposes a pest and disease identification and prediction algorithm based on deep learning, which primarily includes the construction of the pest and disease identification and prediction dataset, the implementation of the pest and disease identification model, and the pest and disease occurrence prediction model. Extensive experiments demonstrate that the accuracy of the pest and disease identification model proposed in this invention can reach 96%, and the prediction model can achieve an accuracy of over 80%.

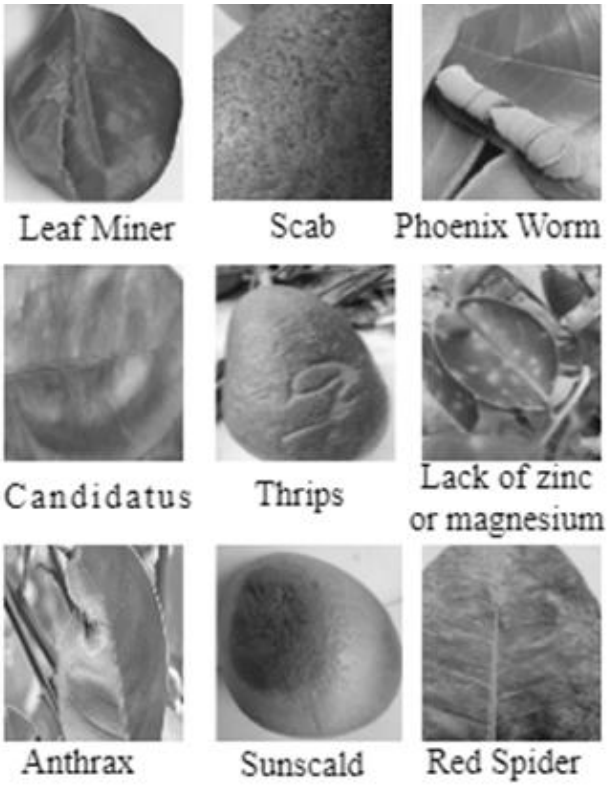

21: 2026/00579. 22: 2026/01/15. 43: 2026/09/07
51: G16C
71: Meso Scale Technologies, LLC.
72: JOERN, John, SIGAL, George
33: US 31: 63/135,999 32: 2021-01-11
54: ASSAY SYSTEM CALIBRATION SYSTEMS AND METHODS
00: -
Systems and methods for calibrating sample assays for analytes are provided. The systems and methods are based on a calibration curve fitting that uses a modified four parameter logistic regression fit equation (modified 4PL) with a modified Hill's slope that is dependent on a function of an inverse of the quantity of an analyte or on a function of a natural logarithm of an inverse of the quantity of the analyte.

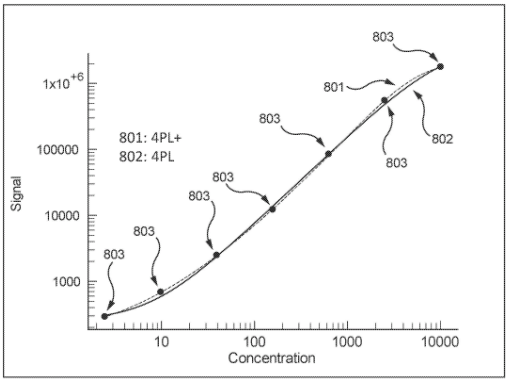

21: 2026/00586. 22: 2026/01/15. 43: 2026/09/07
51: D04B
71: Lonati S.p.A.
72: LONATI, Ettore, LONATI, Fausto, LONATI, Francesco
33: IT 31: 102023000015651 32: 2023-07-26

54: METHOD AND APPARATUS FOR CLOSING A TUBULAR KNITTED ARTICLE AT ONE OF ITS AXIAL ENDS, AT THE END OF ITS PRODUCTION CYCLE ON A CIRCULAR KNITTING MACHINE FOR HOSIERY OR THE LIKE

00: -

A method for closing a tubular knitted article (20) at one of its axial ends (20a), at the end of its production cycle on a circular knitting machine (10) for hosiery or the like, comprising an initial step of producing the article (20) up to the formation of the last row of knitting, at the axial end (20a) of the article (20) that lies opposite to the axial end at which knitting began, retaining the loops of knitting of the last row of knitting in the head of the needles (12) of the machine (10) that formed them, characterized in that it comprises the following additional operating steps of: – translating the loops of knitting, previously retained in the head of the corresponding needle, along the stem (12) of the needle until they are brought below the corresponding latch (12b) in the "unloaded" position; – positioning coaxially to the needle cylinder (11) an annular handling device (2) provided with pick-up spikes (4) which extend parallel to the needles (12) and so as to correspond to them, at least one first group of the pick-up spikes (4) having, along its longitudinal extension (102), at least one retention portion (5) which extends transversely with respect to the axis of longitudinal extension (102) of the pick-up spike (4), the handling device (2) comprising two semi-annular elements (3a, 3b), one of which (3b) can be overturned with respect to the other (3a) about a diametrical axis (202); – translating, by means of pushers (30), the loops of knitting from the "unloaded" position toward the respective pick-up spike (4) of the handling device (2), the pushers (30) arranged at the pick-up spikes of the first group of spikes translating the corresponding loop of knitting at least to the retention portion (5) of the spikes of the first group; – disengaging the pushers (30) from the loops of knitting; – positioning the article (20) retained by the retention portions (5) of the handling device (2) at a sewing or looping station (200); – turning the article (20) retained by the handling device (2); – superimposing each of the loops of knitting of a half-row of knitting on a corresponding loop of knitting of the other half-row of the last row of knitting on a same pick-up spike (4) of the handling device (2) by means of the overturning, through an arc of substantially 180° around the diametrical axis (202), of one of the two semi-annular elements (3b) of the handling device (2) with respect to the other semi-annular element (3a); – sewing or looping the pairs of mutually superimposed loops of knitting; – disengaging the article (20) from the handling device (2).

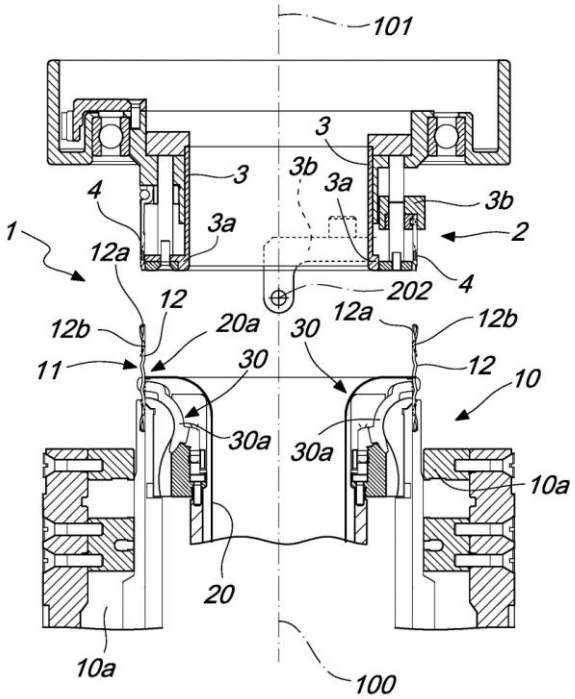

21: 2026/00656. 22: 2026/01/16. 43: 2026/09/08
51: A01B; G01J; G06T

71: NEOLITHICS LTD
72: IGNAT, Timea, MORGAN, Guy, OSHEROVICH, Eliyahu, SCHMILOVITCH, Ze'ev
33: US 31: 18/226,543 32: 2023-07-26
54: SYSTEM AND METHOD FOR HYPERSPECTRAL IMAGE-BASED QUALITY CONTROL ANALYSIS OF CROP LOADS
00: -
System and method for imaging-based quality assessment of raw produce loads, including an imaging structure comprising a mounting beam, light sources; optical sensors, and additional sensors; wherein the mounting beam is configured to allow vertical, lateral and/or longitudinal and movement of the measurement chamber. The system also includes a processing unit configured to control the vertical, lateral and/or longitudinal movement of the measurement chamber relative to the mounting beam, control opto-mechanical parameters of the optical sensors, control the position, orientation, light projection and/or light intensity of the light sources; trigger signal acquisition, receiving and fusing spectral data from the optical sensors with data from the additional sensors; and feeding the fused data into machine learning algorithm and/or big-data analytics model, to derive internal and/or external quality attributes of the produce.

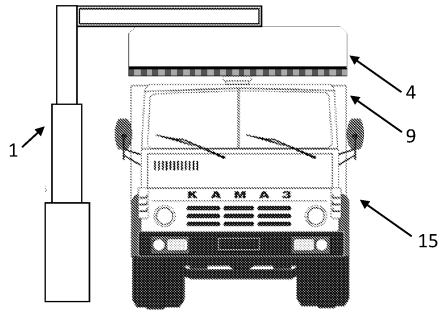

21: 2026/00702. 22: 2026/01/19. 43: 2026/10/06
51: A23L; C11D; G03F
71: Navjeet Kaur Lotey, Nrashant Singh, Gursirat Singh Khokhar, Samir Kulkarni, Amity University Dubai
72: Navjeet Kaur Lotey, Nrashant Singh, Gursirat Singh Khokhar, Samir Kulkarni
33: IN 31: 202521089400 32: 2025-09-19
54: A BIO-DERIVED LUMINESCENT NANOMATERIAL COMPOSITION FOR HIGHRESOLUTION SURFACE IMAGING AND METHOD OF PREPARATION THEREOF
00: -
The present invention discloses a luminescent nanomaterial composition 108 for advanced surface-resolved imaging, particularly suited for detecting trace organic residues on varied substrates. The method 100 begins with a mixture of biomassbased carbon precursors 101, followed by sterilization 102, filtration 103, and centrifuge separation 104 to isolate active fractions. The supernatant is homogenized through stirring 105 and subjected to controlled incubation 106, yielding a stable nanostructure. The dried product is processed by grinding 107 to obtain nitrogen-doped carbon quantum dots 108 with high-contrast visible photoluminescence. The composition is non-toxic, metal-free, and exhibits selective adhesion to organic contaminants, making it ideal for forensic visualization, environmental mapping, and contamination tracking. The photoluminescent agent 108 provides tunable emission profiles, resistance to photobleaching, and superior contrast across substrates. It enables enhanced spatial resolution, minimal background interference, and scalability in production, thereby overcoming limitations of conventional luminescent agents in real-time, highsensitivity imaging.

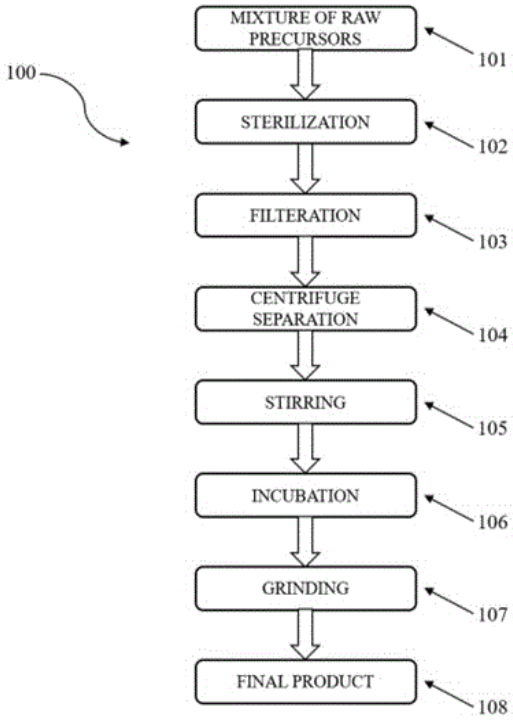

21: 2026/00739. 22: 2026/01/19. 43: 2026/11/06
51: C07C
71: DEHON
72: DEHON, Christophe, LUCAS, Valérie, VAN DER KELEN, Patrick, URTIAGA MENDIA, Ana Maria, ZARCA LAGO, Gabriel, PARDO PARDO, Fernando
33: FR 31: 2308150 32: 2023-07-27
54: METHOD AND FACILITY FOR SEPARATING A MIXTURE COMPRISING AT LEAST ONE FLUORINATED FLUID AND ONE OR MORE CONTAMINANTS
00: -
The invention relates to a method and a facility for recycling a mixture comprising at least one fluorinated fluid, the mixture comprising one or more fluorinated chemical components and one or more contaminants selected from among one or more hydrocarbons and/or one or more fluorinated contaminants, including a step of double membrane filtration for reducing the contaminant content of the mixture.

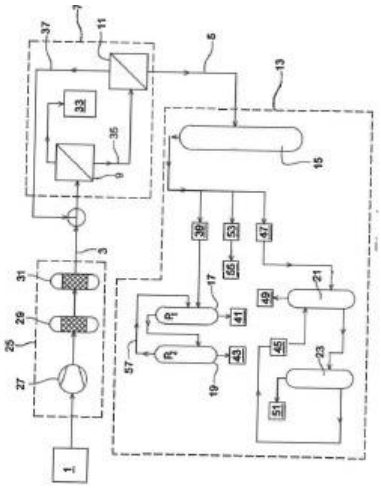

21: 2026/00792. 22: 2026/01/20. 43: 2026/09/09
51: A61P; C07K; A61K
71: NANJING ANJI BIOTECHNOLOGY CO., LTD
72: XU, HANMEI, CHEN, SHUJIAN
33: CN 31: 202310763131.4 32: 2023-06-26
54: FUSION POLYPEPTIDE AJ007 AND USE THEREOF
00: -
A fusion polypeptide AJ007 and a use thereof. The fusion polypeptide AJ007 is formed by linking a TAT cell-penetrating peptide to the front end of a polypeptide HM-1 molecule inhibiting neovascularization. The fusion polypeptide AJ007 is prepared into eye drops by means of a specific prescription, and when wet age-related macular degeneration is prevented or treated, the eye drop administration manner can effectively avoid various serious side effects caused by intravitreal injection in clinic and poor patient tolerance, has the advantage of non-invasive treatment, shows an extremely good efficacy in improving abnormal hyperplasia of choroid neovascularization in a laser-induced mouse wAMD model, and has good clinical treatment potential.

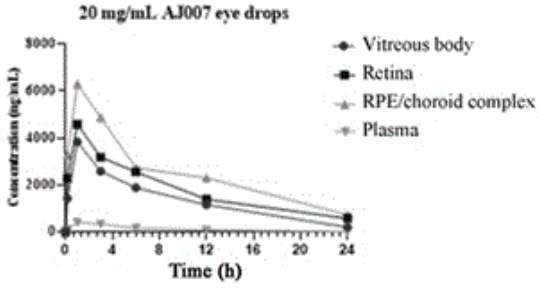

21: 2026/00840. 22: 2026/01/21. 43: 2026/10/09
51: B29C
71: KT PROJEKTENTWICKLUNGS-GMBH
72: TSIBERIDIS, Konstantin, TSOUROUKIDOU, Eleni
54: TIRE REPAIR APPARATUS FOR ATTACHMENT TO A VEHICLE WHEEL
00: -
The invention relates to a tire repair apparatus (10) for attachment to a vehicle wheel (11) that is mounted to a vehicle by means of wheel nuts or wheel bolts (104). The tire repair apparatus (10) comprises: - a carrier element (16), which is associated with a center axis (A) and a circumferential direction (U) and has a side (18) facing the wheel and a side (20) facing away from the wheel, - a compressor (22) fastened to the carrier element (16), - a drive device (23) for the compressor (22), operatively connected to the compressor (22), - a sealing agent container (60) accommodating a tire sealant, the compressor (22) being fluidically connected to the sealing agent container (60), - a connection line (12) designed to be fluidically connected to the sealing agent container (60) and a tire of the vehicle wheel (11) to be repaired, and - a number of pin-shaped retaining elements (88), each having a fastening end (90) and a free end (92), wherein the retaining elements (88) are connected to the carrier element (16) at their

fastening ends (90) and extend from the side (18) of the carrier element (16) facing the tire along a longitudinal axis (L) that is parallel to the center axis (A) and are mutually spaced in the circumferential direction (U), wherein the positions of the pin-shaped retaining elements (88) at least approximately correspond to positions of control bores (100) in the vehicle wheel (11) which extend into the vehicle wheel (11) in parallel to the center axis (A), are situated between two bores (102) for wheel bolts (104) each and serve for wheel alignment, and wherein each pin-shaped retaining element (88) can be inserted into one of the control bores (100) in the vehicle wheel (11) in order to fasten the tire repair apparatus (10) adhesively, clampingly or interlockingly to the vehicle wheel (11).

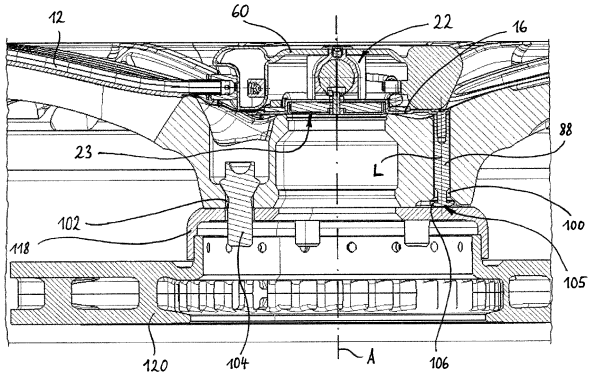

21: 2026/00854. 22: 2026/01/21. 43: 2026/09/16
51: B01J; F02M; F02P; H01T; H05H
71: Green Lightning Solutions, LLC
72: LEWIS III, Joseph
33: US 31: 18/222,080 32: 2023-07-14
33: US 31: 18/222,027 32: 2023-07-14
33: US 31: 18/222,252 32: 2023-07-14
33: US 31: 18/222,053 32: 2023-07-14
33: US 31: 18/222,176 32: 2023-07-14
33: US 31: 18/222,103 32: 2023-07-14
33: US 31: 18/222,220 32: 2023-07-14
33: US 31: 18/222,135 32: 2023-07-14
54: APPARATUS, SYSTEM AND METHOD FOR PRODUCING AN IONIZED GAS DISCHARGE FOR TREATMENT OF A MEDIUM
00: -
An apparatus includes a treatment chamber configured to contain a growth medium, at least one reservoir configured to contain at least one fluid, and a plasma reactor. The plasma reactor includes a plurality of electrodes including a first electrode and a second electrode and a reaction region is disposed between the first electrode and the second electrode. The apparatus also includes an ignition unit electrically connected to at least one electrode of the plurality of electrodes, an injector in fluidic communication with the at least one reservoir, and a pressure regulator configured to transfer the fluid to the injector. Various other apparatuses, systems, and methods are also disclosed.

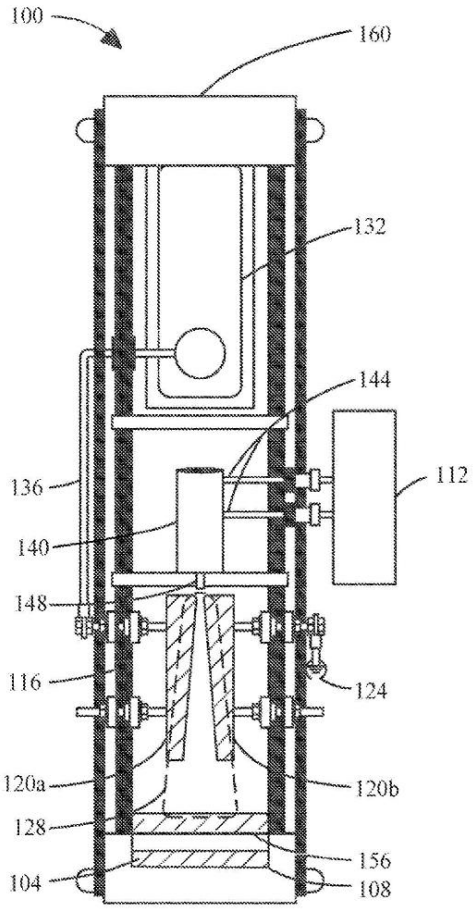

21: 2026/00889. 22: 2026/01/22. 43: 2026/09/22
51: F04D
71: Thomas Stuart MILLER
72: Thomas Stuart MILLER
33: ZA 31: 2025/00704 32: 2025-01-22
54: VORTEX SLURRY PUMP
00: -
A vortex slurry pump is provided comprising a column having a drive end and a wet end; a cantilever pump shaft rotatably supported within the column, and a drive means operatively connected to the drive end of the pump shaft. A vortex impeller is mounted to the wet end of the pump shaft, the

impeller being configured to operate submerged in a slurry. At least one bearing arrangement is disposed within the column to support the cantilever pump shaft. An expeller seal arrangement is disposed between the vortex impeller and the at least one bearing arrangement, the expeller seal arrangement being configured to generate a dynamic seal to prevent the slurry from entering the column and contacting the at least one bearing arrangement.

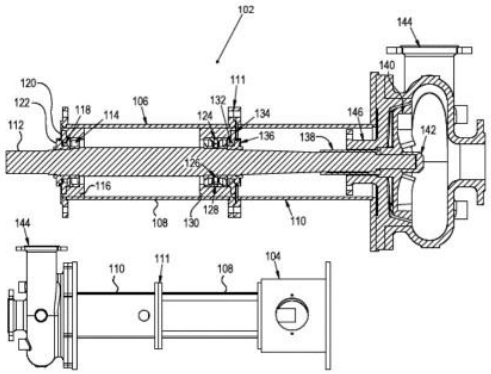

21: 2026/00912. 22: 2026/01/22. 43: 2026/09/11
51: D04B
71: Lonati S.p.A.
72: LONATI, Ettore, LONATI, Fausto, LONATI, Francesco
33: IT 31: 102023000015648 32: 2023-07-26

54: METHOD AND APPARATUS FOR CLOSING A TUBULAR KNITTED ARTICLE AT ONE OF ITS AXIAL ENDS, AT THE END OF ITS PRODUCTION CYCLE ON A CIRCULAR KNITTING MACHINE FOR HOSIERY OR THE LIKE

00: -

A method for closing a tubular knitted article (101) at one of its axial ends, at the end of its production cycle on a circular knitting machine for hosiery or the like, characterized in that it comprises an initial step of: – producing the article (101) up to the formation of the last row of knitting, at the axial end of the article that lies opposite the axial end at which knitting began, by retaining the loops of knitting of the last row of knitting in the head of the needles of the machine that formed them; and the following steps of: – individually picking up the loops of knitting by means of pick-up members (11); – removing the article (101) from the machine that produced it, retaining each loop of knitting of the last formed row of knitting by means of the pick-up members (11); – positioning the article (101) at a sewing or looping station; – the individual passage of the loops of knitting from the pick-up members (11) to spikes (4) of an annular handling device (60) composed of two semi-annular elements (3a, 3b) one of which can be overturned with respect to the other about a diametrical axis (202), at least one first group of spikes (4) having, along its longitudinal extension (102), at least one retention portion (5) which extends transversely with respect to the axis of longitudinal extension (102) of the spike (4), the individual passage step comprising a step of translating the corresponding loop of knitting from the pick-up members (11) at least to the corresponding retention portion (5) of the respective spike (4) of the at least one first group of the spikes; – turning the article (101) retained by the handling device (60); – superimposing each of the loops of knitting of one half-row of knitting on a corresponding loop of knitting of the other half-row of the last row of knitting on a same spike (4) of the handling device (60) by means of the overturning, through an arc of substantially 180° about the diametrical axis (202), of one of the two semi-annular elements (3b) of the handling device (60) with respect to the other semi-annular element (3a), – sewing or looping the mutually overlapping pairs of loops of knitting; – disengaging the article (101) from the handling device (60).

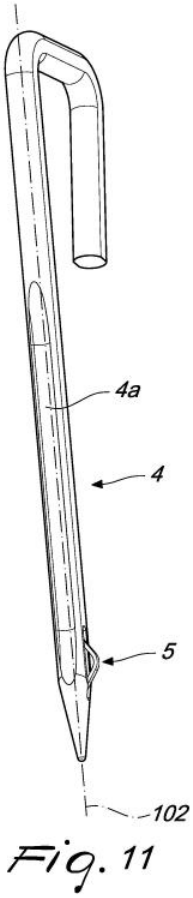

Fig. 11

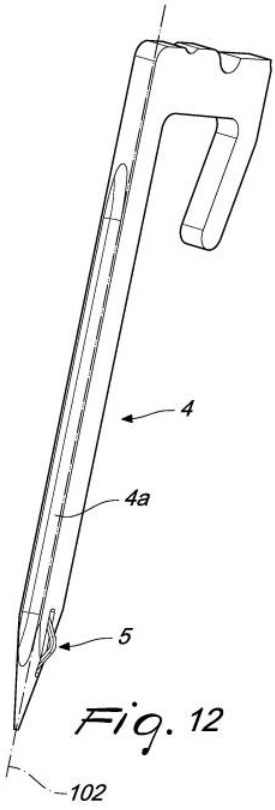

Fig. 12

21: 2026/01006. 22: 2026/01/23. 43: 2026/09/21
51: H05K
71: Huawei Technologies Co., Ltd.
72: YANG, Ming, WANG, Tao, JIANG, Tiezhu, HUANG, Yu
33: CN 31: 202311739785.X 32: 2023-12-16
54: HEAT DISSIPATION PLATE, MIDDLE FRAME, AND ELECTRONIC DEVICE
00: -
Provided in the present application are a heat dissipation plate, a middle frame and an electronic device. The heat dissipation plate comprises a first cover plate, a second cover plate, a capillary structure and a cooling medium, wherein the second cover plate comprises a middle region and an edge region arranged around the middle region; the middle region comprises a shaping area and an accommodation area connected to the shaping area; the edge region is fixedly connected to the first cover plate, the accommodation area in the middle region and the first cover plate are spaced apart from each other and enclose an accommodation cavity, the capillary structure is fixedly connected to the first cover plate and is located in the accommodation cavity, and the cooling medium is arranged in the accommodation cavity; and the shaping area in the middle region is fixedly connected to the first cover plate. In this way, when the accommodation area of the second cover plate is uneven, a force can be applied to the shaping area of the second cover plate to enable the flatness of the accommodation area of the second cover plate to be calibrated within specifications, which greatly improves the yield of the flatness of the heat dissipation plate and is thus conducive to solving the problem of the heat dissipation plate pushing against the screen and the problem of battery debonding.

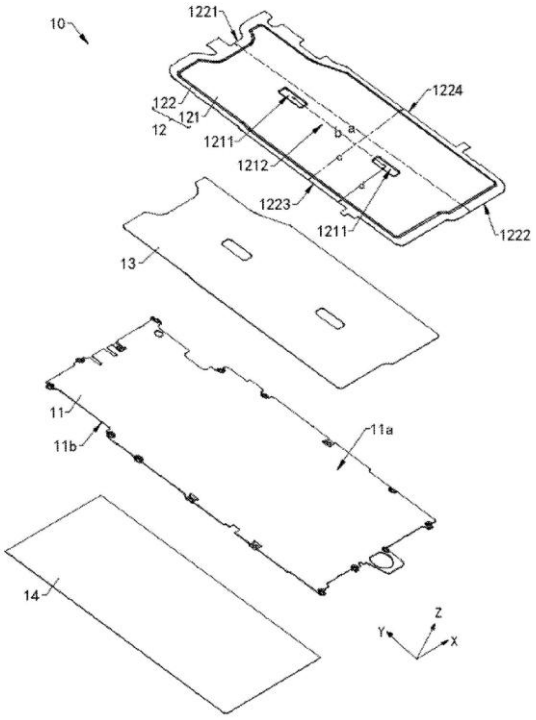

21: 2026/01044. 22: 2026/01/26. 43: 2026/09/14
51: A61C; B65D
71: FARAGO, Laci Zoltan
72: FARAGO, Laci Zoltan
33: ZA 31: 2025/01086 32: 2025-02-04
54: An Oral Hygiene Product
00: -
An oral hygiene product (100) is provided, which includes a body (110) defining at least two separate storage cavities (112, 114). An oral hygiene composition, such as toothpaste or mouthwash, is provided in each storage cavity, and each cavity has

an associated sealed dispensing outlet (120, 122). A distinct zone of weakness (124, 126) is associated with each dispensing outlet. Each zone of weakness is configured to permit a user to selectively unseal the associated outlet by manually rupturing the zone, for instance by tearing or snapping a portion of the body, thereby allowing the dispensing of the composition. The body may be a flexible sachet or a rigid, frangible container. The cavities can contain different compositions or different quantities for single or multiple uses. The product may also be provided as a sheet of multiple, separable units (300).

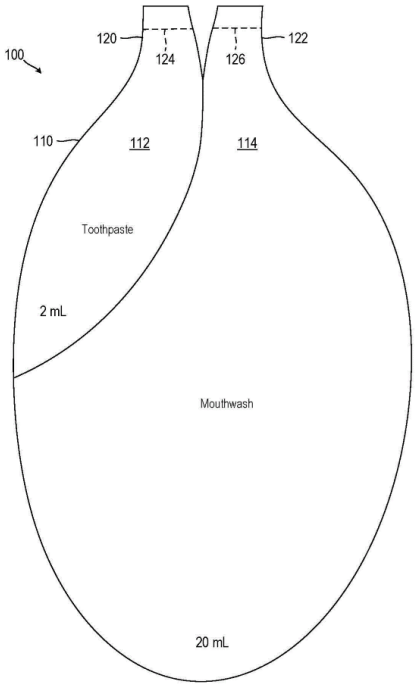

21: 2026/01046. 22: 2026/01/26. 43: 2026/09/14
51: A61K; A61Q
71: Firmenich SA
72: WOMACK, Gary, HERRMANN, Andreas
33: US 31: 62/951,028 32: 2019-12-20
54: PRO-PERFUME COMPOSITIONS
00: -
The present invention relates to a perfuming composition comprising at least two properfume compounds selected from the group consisting of a pro-perfume compound releasing a perfume compound upon exposure to light, a pro-perfume compound releasing a perfume compound upon exposure to air/oxygen, a pro-perfume compound releasing a perfume compound upon exposure to heat, a pro-perfume compound releasing a perfume compound upon exposure to moisture and a pro-perfume compound releasing a perfume compound upon exposure to enzymes. The present invention further concerns a perfumed consumer product comprising the inventive perfuming composition, as well as the use of the inventive perfuming composition for improving, enhancing, conferring and/or modifying the fragrance impression and/or fragrance intensity of a consumer product.

21: 2026/01063. 22: 2026/01/26. 43: 2026/09/22
51: C03C; C09D
71: Saint-Gobain Glass France
72: HEURTEFEU, Bertrand, LOHOU, Stéphane
33: FR 31: FR2308678 32: 2023-08-11
54: GLAZING COMPRISING A TEMPORARY ORGANIC PROTECTIVE LAYER
00: -
The invention relates to glazing materials comprising a substrate coated with a functional coating and with a temporary organic protective layer deposited on at least a portion of the functional coating. The protective layer is obtained by crosslinking a polymerizable composition comprising (a) (meth)acrylate compounds and (b) optionally a polymerization initiator. The temporary organic protective layer has a weight loss by thermogravimetric analysis (TGA) from 30°C to 450°C at a heating rate of 10°C/min in air of greater than 65%.

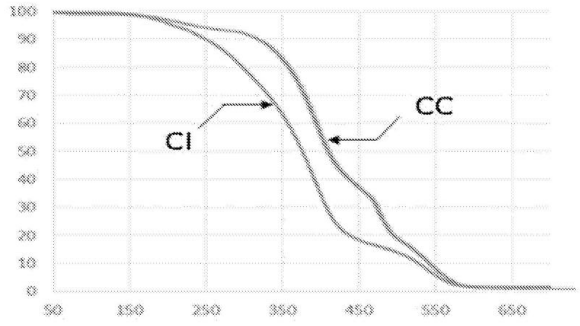

21: 2026/01065. 22: 2026/01/26. 43: 2026/09/23
51: A61K; C07D; A61P
71: TERREMOTO BIOSCIENCES, INC.
72: CHU, Hang, YANG, Kin S., REISBERG, Solomon H., ZAJDLIK, Adam, CARELLI, Jordan D.,

BESTVATER, Brian P., HANSEN, Timothy R., THOMPSON, Peter A.
33: US 31: 63/517,760 32: 2023-08-04
33: US 31: 63/650,658 32: 2024-05-22

54: 3H-IMIDAZO[4,5-B]PYRIDINE COMPOUNDS AS NON-COVALENT MODIFIERS OF AKT1 AND USES THEREOF

00: -

Provided herein are non-covalent modifiers of AKT1 of Formula (I), (II), (II-A), (III), (III-A), (III-B), (IV), (IV-A), (IV-B), (V), (V-A), (V-B), (VI), (VI-A), or (VI-B), and pharmaceutical compositions thereof. In some embodiments, the present disclosure provides methods of modulating wild-type AKT1 using a compound or salt of Formula (I), (II), (II-A), (III), (III-A), (III-B), (IV), (IV-A), (IV-B), (V), (V-A), (V-B), (VI), (VI-A), or (VI-B), and pharmaceutical compositions thereof.

21: 2026/01092. 22: 2026/01/27. 43: 2026/09/14
51: C21D; C22C
71: BAOSHAN IRON & STEEL CO., LTD.
72: ZHU, Xiaodong, XUE, Peng, LI , Wei
33: CN 31: 202310793720.7 32: 2023-06-30

54: ULTRAHIGH-STRENGTH STEEL PLATE HAVING HIGH R VALUE AND MANUFACTURING METHOD THEREFOR

00: -

Disclosed in the present invention is an ultrahigh-strength steel plate having a high r value, comprising, in the thickness direction, an upper surface layer, a middle layer, and a lower surface layer. The main bodies of the microstructures of the upper surface layer and the lower surface layer are ferrite, and the carbon content of the upper surface layer and the carbon content of the lower surface layer are both less than or equal to 0.025%; the mass percentages of chemical elements in the upper surface layer and in the lower surface layer respectively meet: Ti-3.42N-3.98C=0; and the main body of the microstructure of the middle layer is at least one of tempered martensite and bainite. Correspondingly, also disclosed is a manufacturing method for the ultrahigh-strength steel plate having a high r value. The steel plate of the present invention has ultrahigh strength and a high r value. Lighter thickness reduction of the ultrahigh-strength steel plate having a high r value in a deformation process is achieved, and thus the steel plate presents good formability in both global stretching deformation and local deformation.

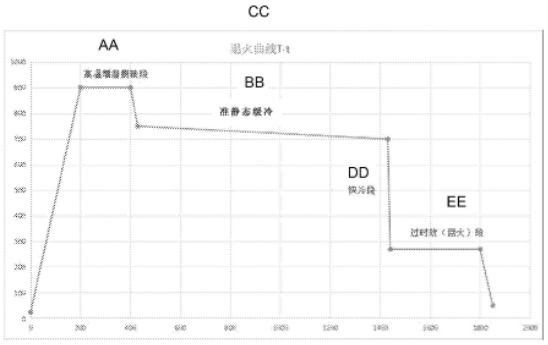

图 1

AA High-temperature humidification and decarbonization phase
BB Quasi-static slow cooling phase
CC Annealing curve
DD Fast cooling phase
EE Over-aging (tempering) phase

21: 2026/01096. 22: 2026/01/27. 43: 2026/09/14
51: A61K
71: NOKHA TRADING LLP, LYRUS LIFE SCIENCES PVT. LTD.
72: BOTHRA, Chandanmal Pukhraj, BOTHRA, Hemanth Kumar, NATARAJAN, Elayaraja, VARMA, Chitra Ajithan, PUTTURU, Ramesh
33: IN 31: 202341045662 32: 2023-07-07

54: TASTE MASKED GRANULE COMPOSITION OF CAFFEINE AND ITS PROCESS OF PREPARATION

00: -

The present invention relates to a taste masked granule composition of Caffeine. The present invention also relates to a taste masked granule composition comprising Caffeine and pharmaceutically acceptable excipients selected from diluents, sweetners, salivating agents, flavoring agents, glidants and solvents. The present invention also relates to a process for the preparation of taste masked granule composition of Caffeine.

21: 2026/01123. 22: 2026/01/28. 43: 2026/09/15
51: B01F
71: Shenzhen Hospital (Futian) of Guangzhou University of Chinese Medicine
72: Fang Yang, Aiqin Bao, Jieqian Wu, Yuanchun Jia, Lingxia Chen, Jiang Jiang, Shuying Li, Yinqin Zhong, Yun Chen

54: DISINFECTANT PREPARATION DEVICE FOR DAILY CARE IN DISINFECTION SUPPLY CENTER

00: -

A disinfectant preparation device for daily care in a disinfection supply center. The device comprises a core mixing platform, on which a raw material container placement mechanism is provided. The raw material container placement mechanism includes a raw material mixing tray, on which a plurality of container controllable fixing mechanisms are uniformly fixed. Each container controllable fixing mechanism comprises components such as a lower triangular support base, a side extension bracket, and side limiting posts. By rotating the adjustment ring, the position of the central sleeve is adjusted, which drives the outer sliding sleeve and the protective soft pad to secure the container, while the buffer spring provides protective functionality. This device accommodates containers of different diameters, offers convenient operation, and enables the efficient preparation of uniformly mixed disinfectant, meeting the daily care needs of disinfection supply centers.

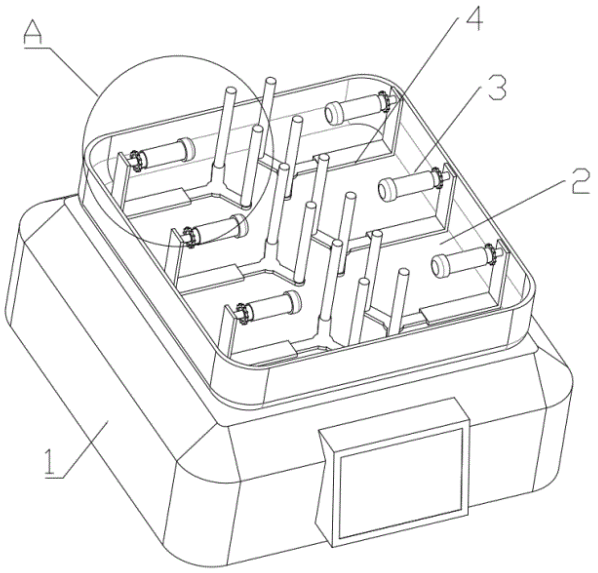

21: 2026/01161. 22: 2026/01/28. 43: 2026/09/15
51: A61K
71: DUTTA, Sanath, INGTI, Sanjeev
72: DUTTA, Sanath, INGTI, Sanjeev
33: IN 31: 202331052741 32: 2023-08-05
54: AN ANTI-INFLAMMATORY HAIR OIL COMPOSITION FOR THE TREATMENT OF ALOPECIA ARETA AND PROCESS OF PREPARING THE SAME
00: -
This invention relates to an Anti-inflammatory hair oil composition for the treatment of Alopecia areta and other related hair problems and in particular, this invention relates to the Anti-inflammatory hair oil composition wherein the hair oil was prepared from extract of Curcuma caesia that can be aqueous or non-aqueous, infused with a non-reactive carrier oil. This invention also relates to the process of preparing the Anti- inflammatory hair oil composition. More particularly, this present invention relates to the Anti-inflammatory hair oil composition has the advantages of increasing the efficiency and cost is low and prevent the hair growth problems and skin related problems.

21: 2026/01195. 22: 2026/01/29. 43: 2026/09/16
51: A24C; A24D
71: TANNPAPIER GMBH
72: KNAUSEDER, Bernhard, LINDNER, Michael
33: AT 31: A50579/2023 32: 2023-07-19
54: LAYER STRUCTURE CONTAINING THERMOCHROMIC OR PH-SENSITIVE SUBSTANCES
00: -
The invention relates to an aerosol-generating consumer product (1) at least comprising a filter (3), an aerosol-generating substrate and a mouthpiece-covering material (5), which surrounds at least a partial region of the filter (3) and has an upper face forming at least part of the surface of the aerosol-generating consumer product (1), wherein the aerosol-generating consumer product (1) has at least one thermochromic or pH-sensitive substance in the region of the mouthpiece-covering material (5).

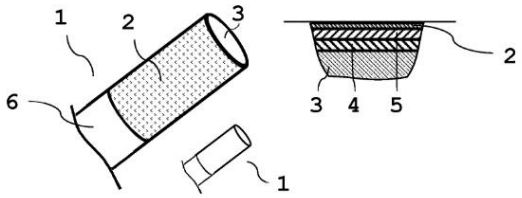

21: 2026/01196. 22: 2026/01/29. 43: 2026/10/08
51: A61K; A61P
71: CHANGSHAN CONJUCHEM BIOPHARMACEUTICAL RESEARCH AND DEVELOPMENT (HEBEI)., LTD
72: SUN, Xiaocui, XU, Geng, QIE, Zhenggang, WANG, Yan, TIAN, Yingtao, LIU, Fengjie, YAN, Yunxia, SUN, Yungai, MA, Chaohui, WANG, Fei, LIU, Xiaohui, DONG, Linlin, ZHANG, Zhe
33: CN 31: 202310973263.X 32: 2023-08-03

54: PHARMACEUTICAL COMPOSITION CONTAINING SUBSTITUTED INDOL-5-OL DERIVATIVE AND USE THEREOF

00: -

Disclosed is a first pharmaceutical composition comprising a substituted indol-5-ol derivative, characterized in that the first pharmaceutical composition comprises (a) a therapeutically effective amount of a compound of formula (I) or a pharmaceutically acceptable salt thereof; and (b) one or more polymer materials, for example, one, two, three, four or five types of polymer materials.

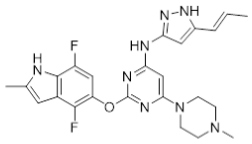

(I)

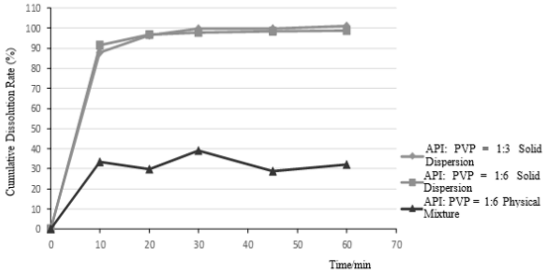

21: 2026/01217. 22: 2026/01/29. 43: 2026/09/16
51: A61L
71: UNIVERSITY OF THE WITWATERSRAND, JOHANNESBURG, MINTEK
72: MOLOTO, Nosipho, SHUMBULA, Ndivhuwo, NDALA, Zakhele, MENTE, Pumza, MOFOKENG, Thapelo, NKABINDE, Siyabonga Sipho, MLAMBO, Mbuso, TETYANA, Phumlani, JENGELE-TETYANA, Zikhona
33: ZA 31: 2023/06710 32: 2023-06-30

54: WOUND DRESSINGS

00: -

The invention relates to wound dressings in the form of tissue scaffolds, gels and powders. The wound dressing comprising at least one polymer material and a coating agent coating the at least one polymer material, wherein the wound dressing is incorporated with an effective amount of an antimicrobial agent. The invention also extends to methods of making the wound dressings and also extends to wound dressings produced in accordance with the methods of the invention.

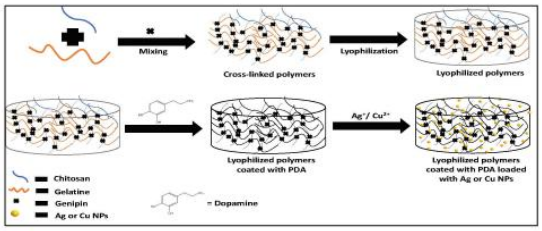

21: 2026/01253. 22: 2026/01/30. 43: 2026/09/16
51: B01L
71: CSIR
72: SCRIBA, MANFRED RUDOLF, KAKAZA, MASIBULELE TIMOTHY
33: ZA 31: 2025/01012 32: 2025-01-31

54: A VALVE SYSTEM FOR THE CONTROL OF LIQUID FLOW IN A MICROFLUIDIC CHANNEL ON A LAB-ON-CHIP DEVICE

00: -

A valve system is provided for controlling liquid flow in a microfluidic channel of a lab-on-chip device. The system includes a valve fluid inlet and a valve fluid outlet with a membrane positioned therebetween. The membrane is movable between a closed position preventing fluid flow and an open position allowing fluid flow. A membrane actuating member includes an arm, a membrane-engaging formation, and a cam, and is biased toward a position in which the membrane is held in the closed position. A fluid actuating member of the lab-on-chip device engages the cam to move the actuating member to a position in which the membrane-engaging formation disengages from the membrane, thereby opening the valve. Withdrawal of the fluid actuating member allows the membrane to return to the closed position.

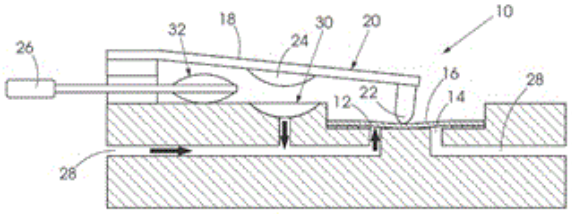

21: 2026/01283. 22: 2026/01/30. 43: 2026/09/17
51: A61K; A61P; C07K
71: CAREGEN CO., LTD.
72: CHUNG, Yong Ji, KIM, Eun Mi, LEE, Eung Ji
33: KR 31: 10-2023-0104783 32: 2023-08-10

54: PEPTIDE HAVING ACTIVITY OF ALLEVIATING DRY EYE DISEASE AND USES THEREOF

00: -

The peptide of the present invention has a binding ability to PAC1R, promotes the activation of the PAC1R signaling pathway, and induces the differentiation of neuroblastoma, thereby having an activity of promoting tear secretion. In addition, the peptide of the present invention has an activity of promoting expression and secretion of mucin, which is a component of tears, in conjunctival goblet cells, and inhibiting inflammatory responses and cell damage in human corneal epithelial cells. The peptide of the present invention can be used as an active substance for treating, preventing, and alleviating dry eye disease.

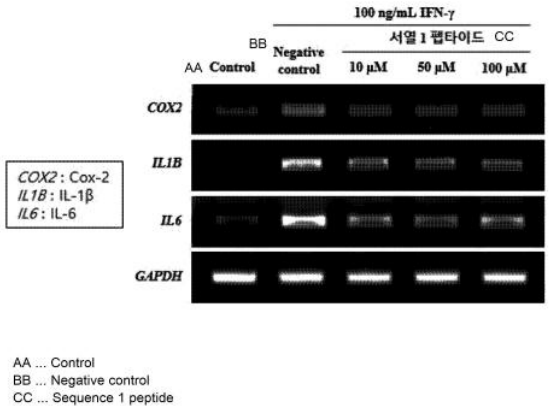

21: 2026/01301. 22: 2026/01/30. 43: 2026/09/17
51: A61K
71: LIQMEDS WORLDWIDE LIMITED
72: UMRETHIA, Manish, PANSARA, Chintan
33: IN 31: 202321051585 32: 2023-08-01

54: AN ORAL LIQUID FORMULATION OF APIXABAN

00: -

The present invention is related to an oral liquid formulation of apixaban. The present invention is specifically related to an oral liquid formulation of apixaban which is comprising a therapeutically effective amount of apixaban, a salt or prodrug thereof; one or more viscosifying agents; one or more buffering agents to provide a formulation pH of 3.5 to 4.5, and one or more pharmaceutically acceptable excipients. The present invention also related to process of preparation of an oral liquid formulation of apixaban.

21: 2026/01319. 22: 2026/02/02. 43: 2026/09/17
51: G01M
71: Dr. B. R. Ambedkar National Institute of Technology, Dr. Senthil Kasilingam, Dr. Hemant Sharad Chore, Dr. Arvind Kumar Agnihotri, Shivam
72: Dr. Senthil Kasilingam, Dr. Hemant Sharad Chore, Dr. Arvind Kumar Agnihotri, Shivam

54: VARIABLE HEAD GUIDED VERTICAL DROP WEIGHT IMPACT TESTING APPARATUS

00: -

The present invention relates to a vertical drop weight impact testing apparatus (100). The apparatus comprises a frame structure (101H, 101V) including a plurality of vertical columns (101V) and a horizontal beam (101H). The apparatus (100) further comprises a hoist trolley (103) mounted on the horizontal beam (101H) and configured for lateral movement along the horizontal beam (101H). Further, a hoist (105) suspended from the hoist trolley (103), the hoist (105) being configured to raise and lower a drop hammer (111). The apparatus (100) further comprises a fixture or drop head assembly (107) operatively connected to the drop hammer (111) to align and guide the drop hammer during descent. The apparatus (100) further comprises a specimen holder disposed beneath the drop hammer (111) and configured to rigidly retain a test specimen during impact and a control pendant electrically connected to the hoist (105).

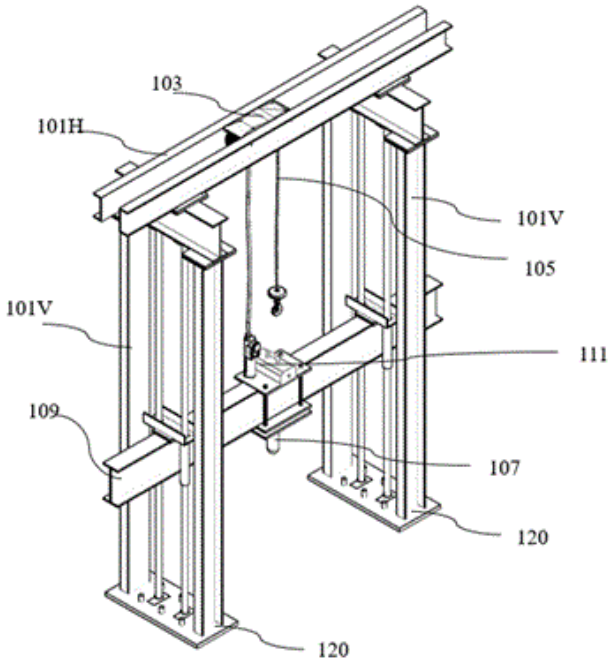

21: 2026/01322. 22: 2026/02/02. 43: 2026/09/28
51: G01L
71: Dr. Amit Kumar, Mr. Shivam Dubey
72: Dr. Amit Kumar, Mr. Shivam Dubey

54: HAPTIC FEEDBACK WEARABLE DEVICE FOR MARKET VOLATILITY ALERTS

00: -

The invention relates to a haptic feedback wearable device configured to generate tactile alerts corresponding to real-time financial market volatility. The device comprises a wireless communication module for receiving market data, a data acquisition and preprocessing unit for filtering and time-aligning the data, and a volatility computation engine that applies statistical or machine learning algorithms to determine discrete volatility states. A pattern mapping and encoding module associates each volatility state with a predefined haptic pattern and encodes it into actuator control signals. A haptic driver circuit drives actuator, such as linear resonant actuators, to generate distinguishable vibration patterns representing different volatility levels. The modules are functionally connected in a real-time signal processing pipeline to achieve low-latency tactile feedback. The system enables users to monitor multiple market assets through structured haptic alerts without visual engagement, improving responsiveness in high-speed trading environments.

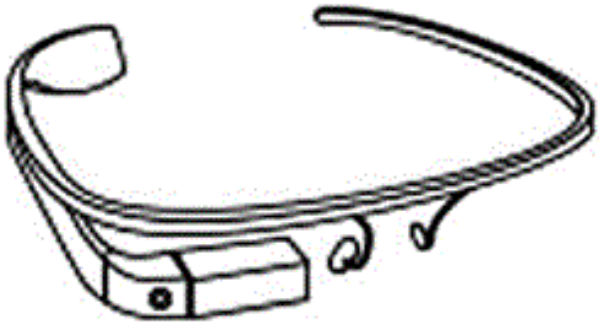

21: 2026/01404. 22: 2026/02/03. 43: 2026/10/01
51: G01S
71: K.RAMAKRISHNAN COLLEGE OF ENGINEERING
72: GABRIEL SANTHOSH KUMAR GUNASEELAN, DHIVAKAR SUNDHARA MOORTHY, MANIKKADEEPAN KARTHIKEYAN, NAVANEETHRAJ SELVARASU, SARAN AYINAMPILLAI

54: AN AUTONOMOUS MARINE CLEANING SYSTEM

00: -

The present invention discloses an autonomous marine cleaning system (50) configured to detect, classify, collect, and dispose of marine waste without human intervention. The system comprises a solar panel (1), camera (2), waste collector (3), aerial drone (4), drone landing space (5), and controller unit (6). Powered by solar energy, the vessel uses electric propulsion for sustainable navigation. The waste collector (3), comprising suction pumps or robotic arms, retrieves floating debris into segregated onboard compartments. The drone (4), equipped with cameras and sensors, performs real-time aerial surveillance and guides the vessel to pollution zones. The onboard camera (2) captures debris images, processed through AI based models for waste classification. The controller unit (6) integrates microcontroller logic, AI algorithms, and IoT modules for system control and remote monitoring. The system includes a microplastic filtration unit and supports obstacle detection and drone based emergency signalling. It provides a scalable and eco-friendly solution for autonomous marine waste management.



21: 2026/01426. 22: 2026/02/03. 43: 2026/10/19
51: E21B; E21D
71: Anhui University of Science and Technology
72: Lei Fan, Jucai Chang, Zhiqiang Yin, Tuo Wang, Chao Qi, Yijun Guo, Lianghuan Yan, Hongda Wang, Li Lin
33: CN 31: 202411446082.2 32: 2024-10-16
54: SEALING DEVICE FOR POSITIONING POINTS IN HOLES OF PROCESS GROUTING
00: -
A sealing device for positioning points in holes of process grouting is provided, which includes an isolation component provided on an anchor cable body. The isolation component is detachably connected to an isolation sleeve through a coupling component, the isolation sleeve can be provided on the anchor cable body to send the isolation component into a corresponding position in a borehole and cooperates with the isolation component to perform a fixed-point isolation on a surrounding rock area in the borehole. A combination of the isolation component and the isolation sleeve sleeved on the anchor cable body is used, and the inflation and expansion of the first and second airbags are used to achieve tight contact with a hole wall, thereby forming effective isolation at specific locations within the borehole, thereby laying a foundation for dynamic grouting in stages and regions. The docking part is provided with an installation groove.

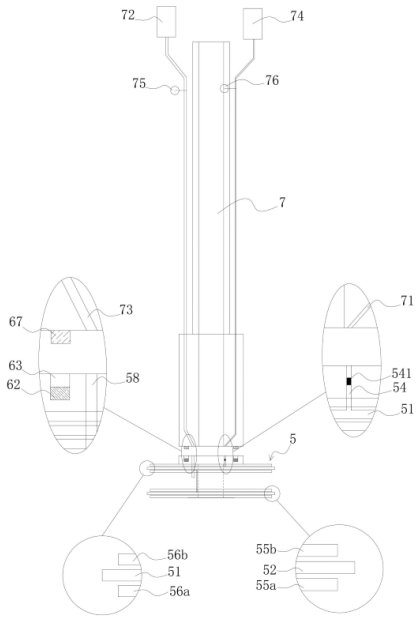

21: 2026/01450. 22: 2026/02/04. 43: 2026/10/01
51: A01K
71: Tongwei Agricultural Development Co., Ltd
72: Mi Haifeng, Yin Heng, Zhang Lu, Wang Wugang, Li Tingting, Huang Tianyu
33: CN 31: 2025116239684 32: 2025-11-07
54: A FEEDING METHOD FOR GRASS CARP REPRODUCTION
00: -
The present invention specifically relates to a feeding method for grass carp reproduction, which relates to the field of aquaculture technology. It includes: analyzing the texture and behavior of grass carp to obtain the meat tightness coefficient and population dispersion coefficient, and conducting comprehensive analysis to obtain the qualified judgment coefficient. Based on the qualified judgment coefficient, it is determined whether to transfer the caught grass carp to circulating water for temporary cultivation.In the present invention, the meat tightness coefficient is constructed based on two compression tests using a texture analyzer to objectively quantify the hardness and elasticity of fish meat;By dynamically monitoring the group dispersion coefficient, accurately determine the stability of fish dispersion and avoid accidental errors;After normalization of the two, a qualified judgment coefficient is formed.

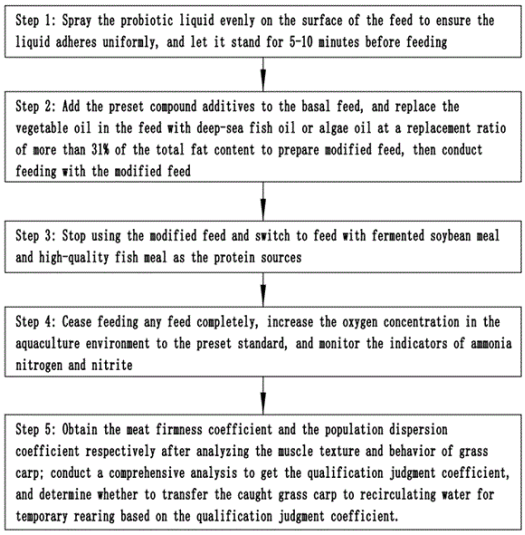

21: 2026/01451. 22: 2026/02/04. 43: 2026/10/01
51: B01F
71: Tongwei Agricultural Development Co., Ltd
72: Mi Haifeng, Zhang Lu, Zhao Cheng, Yin Heng, Ling Xiaodong, Wang Wugang
33: CN 31: 2025104429993 32: 2025-04-10
54: A FEED MIXING DEVICE
00: -

The present invention discloses a feed mixing device, which relates to the field of feed mixing technology, comprising a hollow transmission shaft that is rotatably installed inside the feed mixing drum through a bearing. The device can transport feed base and fine materials by installing a spiral conveying mixing bracket. At the same time, the staff adjusts the material discharge control valve at the lower end of the four material filling drums to achieve the discharge amount of feed base and fine materials per unit time, thereby making the amount of feed base and fine materials entering the feed mixing drum constant per unit time. This allows the spiral conveying mixing bracket to mix the feed base and fine materials while transporting them, eliminating the need for the staff to mix the feed base and fine materials in advance, so that the device does not need to be used for a long time. Preparation of materials,Prevent the occurrence of ineffective operation of the feed mixing device during material preparation and discharge stages.

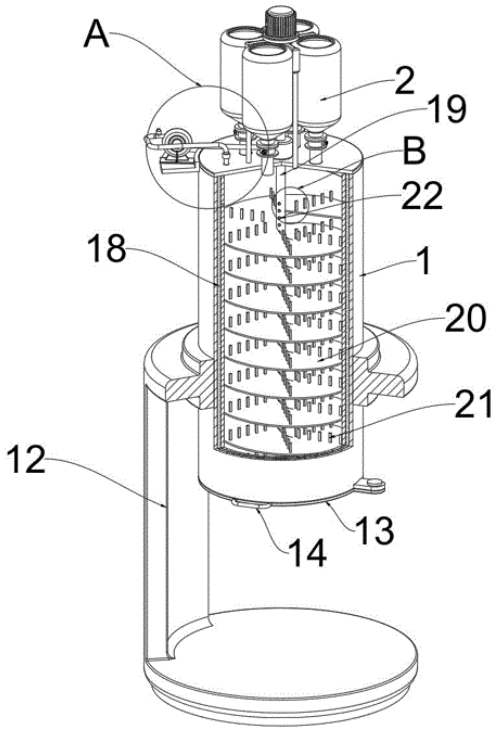

21: 2026/01452. 22: 2026/02/04. 43: 2026/10/01
51: A01K
71: Tongwei Agricultural Development Co., Ltd
72: Mi Haifeng, Yin Heng, Li Baosheng, Xue Chunyu, Fan Boya
33: CN 31: 2025103537435 32: 2025-03-25
54: AN ENERGY-SAVING CIRCULAR AQUACULTURE SYSTEM
00: -

The present invention discloses an energy-saving circulating water aquaculture system, comprising a fish pond, wherein the bottom section of the fish pond is set as a trapezoid;A biological purification tank, wherein the inner wall of the biological purification tank is provided with a second slope, and the bottom of the second slope is provided with evenly distributed volcanic rocks. The surface of the volcanic rocks uniformly adsorbs microorganisms used for biological purification of sewage;The fish pond and biological purification pond are connected through a large particle residue filter, which relates to the technical field of aquaculture system. By setting foam aluminum plates in the plant planting trough to support the bottom of the compressed straw layer and soil layer, the safety of equipment use is improved, and at the same time, it is convenient for sewage containing fish excreta to

slowly enter the soil layer for continuous and stable nutrient supply, which improves the protection of plant growth. It can not only avoid excessive nutrients, but also provide nutrients stably, improving the practicality of equipment use.

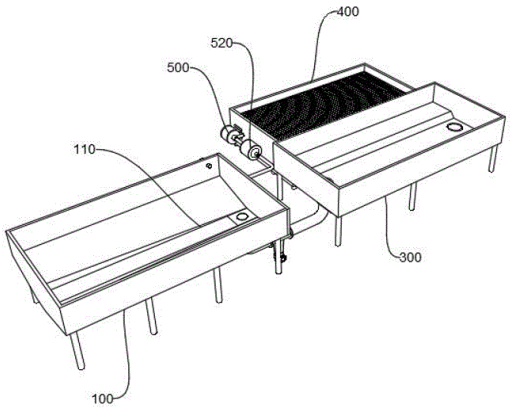

21: 2026/01491. 22: 2026/02/04. 43: 2026/10/06
51: F25D
71: Thermodyne Food Service Products, Inc.
72: David C. Schenkel, Mark Blasi, Tim P. Tippmann
33: US 31: 19/048,382 32: 2025-02-07
54: A TEMPERATURE-CONTROLLED FOODSERVICE UNIT
00: -
A temperature-controlled foodservice unit includes: a body including a frame and defining a chamber; and temperature-controlled systems operatively coupled with the frame and configured for transferring heat with respect to a food product positioned within the chamber, the temperature-controlled systems including: a temperature-controlled shelf system including at least one shelf and at least one fluid passageway, the at least one shelf being positioned within the chamber, the at least one fluid passageway being associated with the at least one shelf and configured for carrying a fluid therein so as to transfer heat by thermal conduction and thermal radiation with respect to the food product on the shelf; and a temperature-controlled air system configured for moving air through the chamber so as to transfer heat by thermal convection with respect to the food product positioned on the at least one shelf and for supplying air to the chamber from opposing directions.

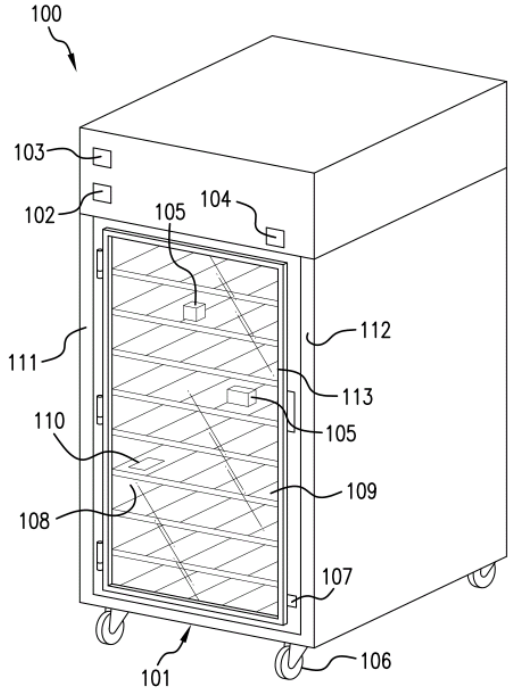

21: 2026/01494. 22: 2026/02/04. 43: 2026/10/06
51: G06F
71: VISHWAKARMA INSTITUTE OF TECHNOLOGY
72: BHONDE, Harsh Sanjay, HAKIM, Abdeali Abdulhussain, SUPLE, Kaiwalya Pramod, KUNJEER, Ashutosh Yogesh, WANKHADE, Shalini Vaibhav, MAHALLE, Parikshit N.
54: A TINYML BASED EMBEDDED SYSTEM FOR REAL-TIME ANOMALY DETECTION IN MECHANICAL EQUIPMENT USING VIBRATION DATA
00: -
The present invention is related to a TinyML based embedded system for real-time anomaly detection in mechanical equipment using vibration data. It utilizes statistical and neural network models to classify operational states as normal or anomalous based on accelerometer readings. The system is designed to run on low-power microcontrollers such as ESP32, enabling predictive maintenance and fault prevention in resource-constrained environments. It offers real-time alerts, operates offline, and integrates easily with industrial workflows. The invention aims to reduce mechanical failure rates, optimize maintenance schedules, and enhance safety through edge-based AI analytics.

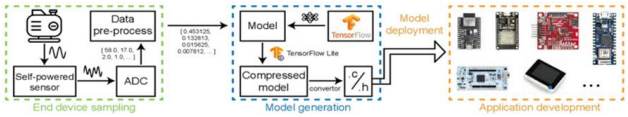

21: 2026/01496. 22: 2026/02/04. 43: 2026/10/07
51: F22B
71: FRAMATOME INC.
72: TROYER, Greg, MATTHEWS, M. Todd, KELLEY, Craig, THALLAPRAGADA, Pavan
33: US 31: 63/533,074 32: 2023-08-16
54: PROBABILISTIC EVALUATION OF STEAM GENERATOR TUBE DEGRADATION WITH STATISTICAL SAMPLING AND ARTIFICIAL INTELLIGENCE
00: -
A method of maintaining tubes of a nuclear reactor steam generator includes performing location-specific statistical sampling to generate a distinct set of wear parameters for each of a plurality of locations of the tubes, each distinct set of wear parameters describing wear over time for one of the locations; analyzing each location of each tube based on the distinct set of wear parameters and mechanical properties for each location of each tube by computing a performance criteria probability for each location of each tube; calculating a computed performance criteria probability for the specified steam generator as a whole from the computed performance criteria for each location of each tube at a future time; and upon a determination that the computed performance criteria probability for the specified steam generator reaches or passes a predetermined threshold, identifying tubes to be plugged based the performance criteria probabilities for the locations.

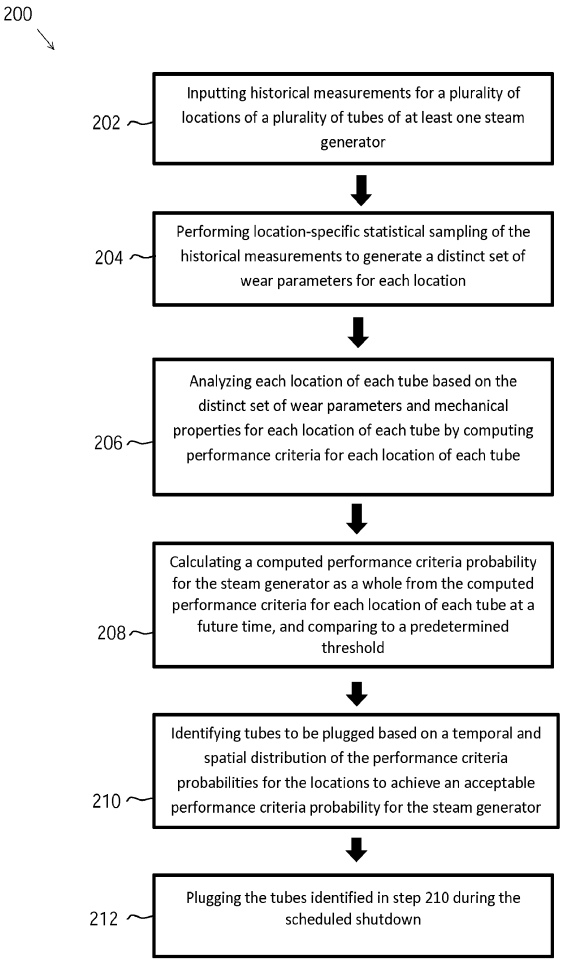

21: 2026/01501. 22: 2026/02/04. 43: 2026/10/08
51: F21V; F21W; F21Y
71: HUNAN CHENGDONG TECHNOLOGY CO., LTD.
72: Qihong XIAO, Fuyuan CHEN, Tianfang LI, Qingping LI, Feng LIU, Aizhen LUO, Zhangcheng LI, Dong TAN
33: CN 31: 202411187784.3 32: 2024-08-28
54: 360-DEGREE LIGHT-EMITTING HIGH-INTENSITY AVIATION OBSTRUCTION LIGHT
00: -
The present invention provides a 360-degree light-emitting high-intensity aviation obstruction light, comprising: a light base; a light-transmitting cover, connected to the light base, the light-transmitting cover and the light base enclosing a cavity; a number of reflector groups, located in the cavity, each reflector group rotatably connected to the light base, the a number of reflector groups arranged at intervals around a middle part of the light base, and the a number of reflector groups enclosing a ring-like

structure; each reflector group comprises a first reflector, a first substrate, and a first light source, the first reflector, the first substrate, and the first light source are all located at one side of the light base, the first substrate is disposed on a side of the first reflector facing the light base, a first mounting slot is enclosed between the first substrate and the first reflector, the first light source is disposed in the first mounting slot; a number of adjusting members, each adjusting member movably connected to one reflector group, the adjusting member used to drive the reflector group to rotate around the light base.

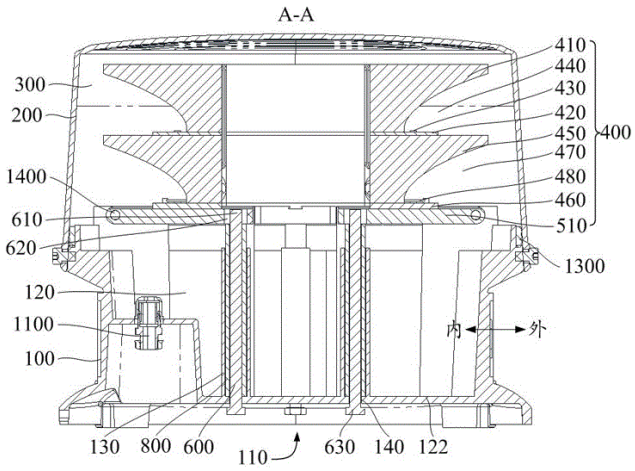

21: 2026/01506. 22: 2026/02/04. 43: 2026/10/08
51: G01N
71: CENTRAL HOSPITAL OF MINHANG DISTRICT SHANGHAI
72: Yuan Chunyan, Sheng Xia
33: CN 31: 202310947159.3 32: 2023-07-28

54: INTELLIGENT DETECTION METHOD AND SYSTEM FOR GASTROINTESTINAL CANCER CELLS BASED ON DEEP LEARNING, MEDIUM, AND DEVICE

00: -

Provided are an intelligent detection method and system for gastrointestinal cancer cells based on deep learning, a medium, and a device. The method includes: S1: distinguishing tumor cells in gastrointestinal cancer tumor tissues using an identification model of gastrointestinal cancer HE sections; and S2: interpreting an expression result of mismatch repair (MMR) proteins in the tumor cells using an MMR protein interpretation model. In the present invention, the gastrointestinal cancer MMR proteins are interpreted using machine deep learning, solving the problem of subjectivity in manual interpretation, and achieving the purposes of improving the accuracy of interpretation and reducing the workload of pathologists.

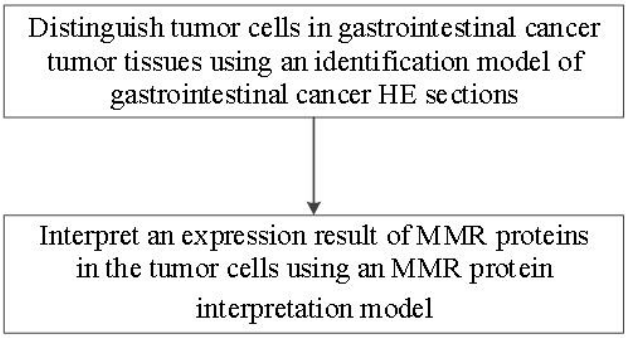

21: 2026/01527. 22: 2026/02/05. 43: 2026/10/08
51: E01C; G01N
71: CCCC ROAD AND BRIDGE CONSTRUCTION CO., LTD., CCCC ROAD AND BRIDGE SOUTH ENGINEERING CO., LTD
72: MA, Chao, ZHANG, Lishuang, PENG, Libin, LI, Fujun, ZHOU, Gang, ZHANG, Guowang

54: CONSTRUCTION METHOD FOR HIGH-FILL EMBANKMENTS IN SEASONALLY FROZEN REGIONS

00: -

The present invention discloses a construction method for high-fill embankments in seasonally frozen regions, and belongs to the field of roadbed construction. The construction method includes the following steps: construction preparation and survey staking; clearing and subgrade treatment; excavation of longitudinal and transverse drainage trenches within roadbed subgrade, laying of filter geotextile in the trenches, and filling with sieved crushed stone to form drainage channels; placement of filter-backfill material in drainage wells outside side ditches or beneath the pavement along fully frozen sections; layered filling using well-draining crushed stone or gravel, with each layer maintaining a transverse drainage slope at the top surface; for high-fill sections, after each layer is compacted to the specified compaction degree, dynamic compaction is performed; and after dynamic compaction and grid placement, overall rolling is conducted to form the designed transverse slope of the roadbed. The present invention combines a systematic drainage and frost-protection technique with a dynamic compaction reinforcement process for high-fill embankments, simultaneously considers

frost protection effectiveness and structural strength, reduces subsequent maintenance costs, and is applicable to high-fill projects in seasonally frozen regions.

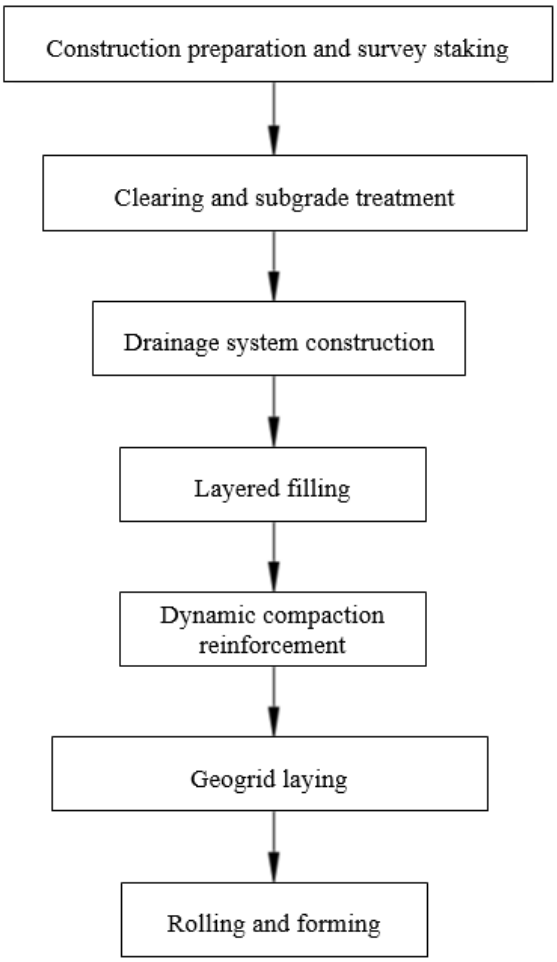

21: 2026/01533. 22: 2026/02/05. 43: 2026/10/06
51: B60P
71: Zhejiang Industry and Trade Vocational College
72: Chen Suilei, Chen Qin
54: MULTI-LAYER LOGISTICS TRANSPORT VEHICLE
00: -
The present invention relates to the technical field of logistics transportation devices, and provides a multi-layer logistics transport vehicle, comprising: a frame; a transport box, wherein the transport box is mounted on the frame; a plurality of layer plate assemblies, wherein the plurality of layer plate assemblies are mounted in the transport box at intervals; the layer plate assembly comprises a layer plate for placement, a plurality of frame plates and a plurality of pairs of first fixing members, the layer plates can be placed on the plurality of frame plates, the frame plate can be fixed on the side wall of the transport box by means of the corresponding first fixing members; and at least one vertically arranged partition plate is provided on the layer plate. The present invention is highly adjustable, and can partition goods, offering high flexibility in use.

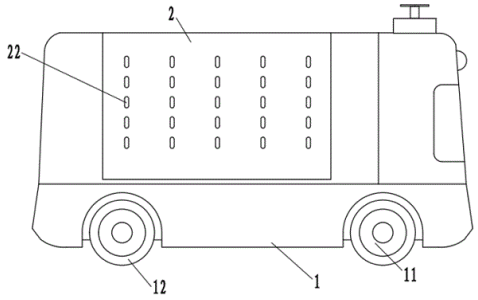

21: 2026/01534. 22: 2026/02/05. 43: 2026/10/06
51: G06F
71: Zhejiang Industry and Trade Vocational College
72: Wang Zhenning
54: CROSS-BORDER EXPRESS FULL-LINK RISK MONITORING AND STANDARDIZED SERVICE GUARANTEE METHOD
00: -
The present invention provides a cross-border express full-link risk monitoring and standardized service guarantee method, relating to the technical field of smart logistics and supply chain risk management. The method comprises: constructing a unified data integration platform, collecting real-time data from full-link logistics operations, including parcel collection and cross-border transportation, and external environment data to form a full-link order view. Building a multi-dimensional risk assessment model on the basis of multi-source data analysis, and implementing dynamic recognition and grading early warning of risks such as transportation delay. At the same time, formulating and implanting a standardized guarantee measure such as a full-link standardized service protocol, a preset dynamic response plan library, and automatically triggering routing adjustment according to the risk level. The present invention fuses a full-link active risk monitoring and standardized service assurance system, improves the reliability of cross-border

express service, etc. And reduces the risk of full-chain operation and the cost of dispute.

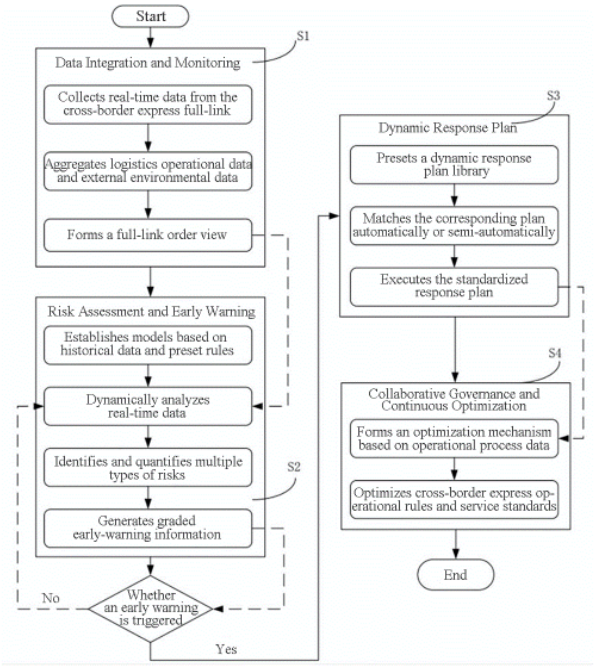

21: 2026/01555. 22: 2026/02/05. 43: 2026/10/09
51: E21D
71: CHANGSHA INSTITUTE OF MINING RESEARCH CO., LTD
72: Guo Zeyang, Qin Min, Liu Chang, Huang Cong, Li Yilong, Lv Guanying, Li Weiming, Zhang Tong, Ma Ruifeng, Guo Yuning
33: CN 31: 202510707866.4 32: 2025-05-29
54: AN ARTIFICIAL ORE PILLAR FOR A GOAF AND ITS CONSTRUCTION METHOD
00: -
The present invention discloses an artificial ore pillar for a goaf and a construction method thereof; relating to the Technical Field of ore mining, comprising a framework and a membrane bag wrapped outside the framework, wherein the framework comprises a cylindrical vertical keel, and multiple steel bar assemblies are arranged at intervals along the vertical direction of the vertical keel, each steel bar assembly comprising multiple transverse steel bars arranged at intervals along the circumferential direction of the framework; one end of each transverse steel bar is rotatably connected to the vertical keel, and multiple pulling ropes are further arranged on the vertical keel, one end of each pulling rope being connected to the vertical keel and the other end being connected to the transverse steel bar of the top steel bar assembly, such that when the pulling rope is in a taut state, the transverse steel bar is perpendicular to the vertical keel; multiple vertical auxiliary bars are arranged between two adjacent steel bar assemblies, and the two ends of each vertical auxiliary bar are respectively rotatably connected to the two steel bar assemblies; the present application drills a hole from the safe area at the top of the goaf into the goaf, lowers a reinforced steel membrane bag into the goaf, and after the reinforced steel cage membrane bag is lowered into the goaf, it automatically opens to form a steel reinforcement mesh. Concrete grout is injected into the steel reinforcement mesh from the hole to form a reinforced concrete artificial ore pillar; enabling operators to complete the construction of the artificial ore pillar without entering the hazardous goaf, thereby reducing operational risk.

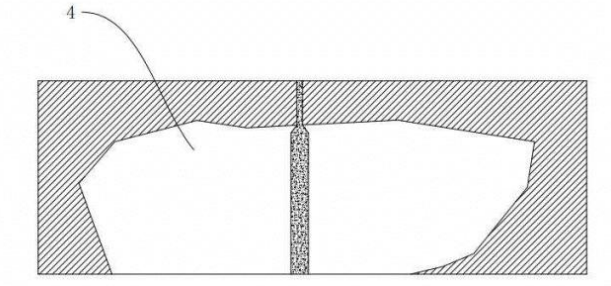

21: 2026/01558. 22: 2026/02/05. 43: 2026/10/09
51: G01B
71: CHANGSHA INSTITUTE OF MINING RESEARCH CO., LTD
72: Li Yilong, Ni Huining, Luo Gexuanzi, Liu Chang
33: CN 31: 202510761667.1 32: 2025-06-09
54: AN INTEGRATED INSTALLATION AND RECOVERY ROOF DISPLACEMENT MONITORING DEVICE AND METHOD
00: -
The present invention discloses a multi stope non interval parallel mining method, in which leading stopes and following stopes arranged in a staggered manner are divided along the strike of an ore body; the stope preparation workings of the leading stope comprise ore gathering wells symmetrically driven on both sides in the bottom width direction, an ore drawing roadway driven at the middle position, and loading roadways arranged between the two sides of the ore drawing roadway and the ore gathering wells; the leading stope starts mining from a

specified distance above the roof of the ore drawing roadway, and after the fallen ore is pushed into the ore gathering wells and discharged quantitatively, a drilling and blasting operation platform of the following stope is formed at the top of the ore in the ore gathering wells; when backfilling after each mining cycle of the leading stope, the width of the ore gathering wells is reserved unfilled; after the leading stope is mined to a specified height ahead of the following stope, mining of the following stope is carried out: horizontal blasting holes are constructed toward the following stope through the operation platform, and after charging and blasting, ore falls downward, and after each blasting a portion of the ore is transported out through the ore drawing roadway and the loading roadways to ensure the space required for the next ore fall, and finally all the ore is transported out at one time. It is apparent that the present invention is a highly efficient and safe mining method, and only the stope preparation workings are arranged at the bottom of the leading stope, which greatly shortens the preparation time and the quantity of the stope preparation workings of the stope.

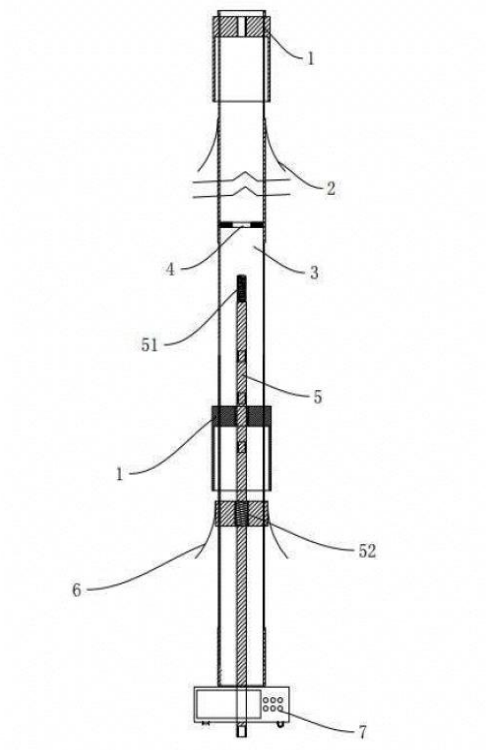

21: 2026/01615. 22: 2026/02/06. 43: 2026/10/20
51: C04B
71: STARCIN HOLDING FRANCE
72: THERENE, Florian, NAEL-REDOLFI, Jennifer, RIZZO, Nicola
33: FR 31: FR2308671 32: 2023-08-11
54: NOVEL ACCELERATORS FOR HYDRAULIC COMPOSITIONS BASED ON GRANULATED BLAST FURNACE SLAG
00: -
The present invention relates to an admixture composition comprising, in relation to the total weight of the admixture composition: - from 1% to 60% by weight of an aluminum salt, and - a calcium salt and/or crystallized blast furnace slag. The present invention also relates to an admixed hydraulic binder composition and to a hydraulic composition comprising such an admixture composition.

21: 2026/01626. 22: 2026/02/06. 43: 2026/10/30
51: B25B; B62D; E21B
71: JOY GLOBAL SURFACE MINING INC.
72: FOUST, Zachary, REGGIATORE, Aaron, OFTEDAHL, Kristofor, WALGREN, Timothy Paul
33: US 31: 63/512,561 32: 2023-07-07
54: BREAKOUT SYSTEM FOR A DRILL
00: -
A breakout system for a drill includes a first wrench, a second wrench, and an actuator for applying a torque to rotate the second wrench relative to the first wrench. The first wrench includes a first clamp member for engaging a portion of a drill string. The first wrench further includes an open side and is supported on a mast of the drill in an orientation to permit viewing the first clamp member from an operator cab of the drill. The second wrench is supported for movement relative to the first wrench. The second wrench includes a second clamp member for engaging another portion of the drill string, includes an open side, and is supported on the mast in an orientation to permit viewing the second clamp member from the operator cab. The first and second clamp members may be configured to pivot outward relative to at least one wrench.

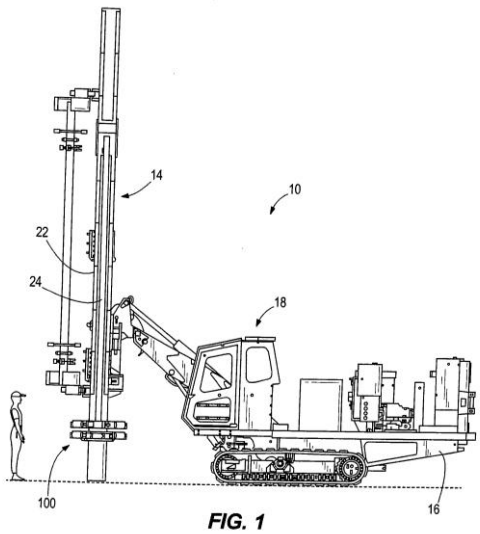

FIG. 1

21: 2026/01660. 22: 2026/02/09. 43: 2026/10/08
51: G08B; H04N; G06V
71: CHINA RAILWAY FIRST ENGINEERING GROUP CO., LTD., CHINA RAILWAY FIRST BUREAU GROUP CO., LTD. INTELLIGENT TECHNOLOGY BRANCH COMPANY, SHAANXI DIGITAL CRAFT CLOUD TECHNOLOGY CO., LTD.
72: WU, Shengtao, BU, Dongping, XU, Hong, LIANG, Xijun, MENG, Feng, WANG, Xiaolin, LI, Yangdi, LI, Shaobin, GE, Mengyao, SU, Bin, LI, Wanglei, FU, Yong, LIU, Feng, WANG, Wei, YAO, Renjie, LIU, Jia, SONG, Hongqing, ZHU, Shijie, SUN, Liming
33: CN 31: 2025109473719 32: 2025-07-09

54: INTELLIGENT SAFETY WARNING METHOD AND SYSTEM BASED ON HUMAN-MACHINE MULTI-SOURCE PERCEPTION

00: -

The present invention provides an intelligent safety warning method and system based on human-machine multi-source perception, and relates to the technical field of safety warning. The method includes the following steps: acquiring surrounding environment data, position data, and video monitoring data of construction equipment during operation in a current time period, and acquiring personnel position data and video activity data; performing path planning based on the surrounding environment data, the position data, and the video monitoring data to obtain a path planning result corresponding to the current time period; and analyzing the video activity data to obtain a corresponding video activity analysis result, and completing safety warning based on a relationship among the video activity analysis result, the path planning result, and the personnel position data. The present invention integrates a plurality of information sources including surrounding environment data, position data of construction equipment and personnel, and video monitoring data, thereby enabling more accurate safety warning.

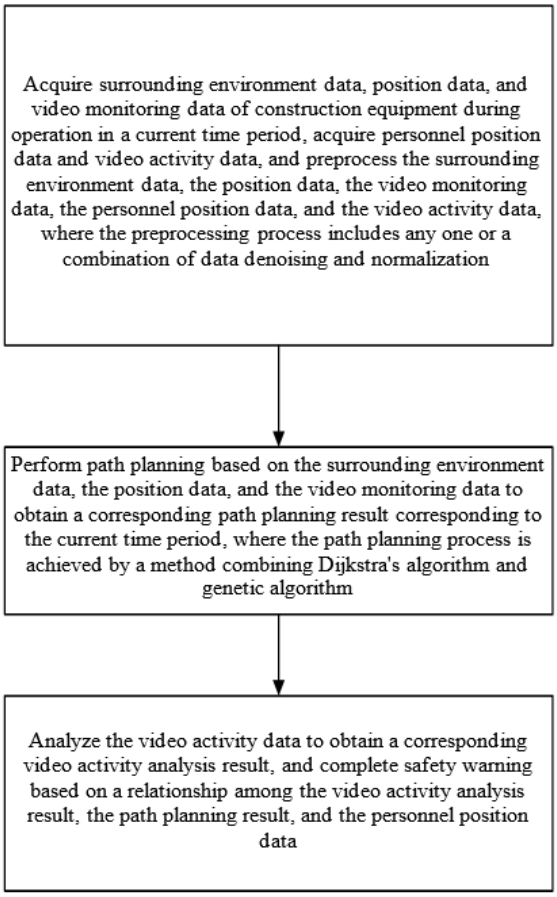

21: 2026/01683. 22: 2026/02/09. 43: 2026/10/09
51: B27N; C10L; E04C
71: AL TALAH BOARD MANUFACTURING COMPANY LTD.
72: FARAH, Hatem
33: US 31: 63/533,363 32: 2023-08-18
33: US 31: 63/683,860 32: 2024-08-16

54: METHOD OF MANUFACTURING PALM SEQUESTERED CARBON BOARDS

00: -

Disclosed herein is the manufacturing of Palm Sequestered Carbon Boards (PSC Boards) from waste date palm leaves. The process includes cleaning palm fronds, baling palm fronds, followed by chipping them to obtain both leaves and midribs.

The chipped material is sifted to separate the leaves from the midribs, with the heavier midribs then passed through a roller-type screen to remove fines and oversized material. The acceptable midrib chips are washed and sent to a flaker to produce wet flakes. The lighter material is further separated through a mechanical separator in order to ensure that only the thin leaves go into the board. Both the leaves and flaked midribs are dried and then passed through a specially designed roller-type screen to segregate larger flakes from smaller ones and also to separate dust. These segregated flakes are then treated with resin to form resonated flakes, which are subsequently processed by forming heads to create layers of palm strands, resulting in high-quality, sustainable PSC boards. PSC boards reduce pollution from burning or burying fronds. Utilizing both leaflets and midribs enhances board strength and sequesters carbon, supporting construction decarbonization.

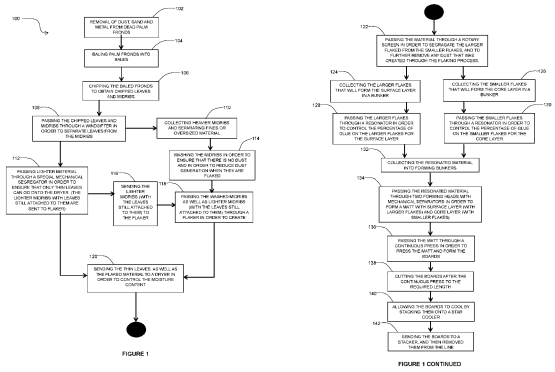

FIGURE 1

FIGURE 1 CONTINUED

21: 2026/01684. 22: 2026/02/09. 43: 2026/09/11
51: G01V; B63B
71: ANTSELEVICH, Mikhail, Aleksandrovich
72: ANTSELEVICH, Mikhail, Aleksandrovich
33: EP 31: 23194279.8 32: 2023-08-30

54: DETECTION METHOD FOR UNDERWATER ROBOTS AND DRONES AND DEVICE SUITABLE FOR ITS IMPLEMENTATION

00: -

The invention relates to the field of detecting ferromagnetic underwater objects and other objects of artificial origin. The technical result of the invention consists in increasing the detection range of fer- romagnetic underwater objects and other objects such as underwater robots and drones that have a complex and heterogeneous structure. The proposed detection method is based on using a radiating magnetic loop antenna in two operating modes: the first - parametric magnetization mode; the second - in- ductive with registration of parametric modulation and the channel of mechanical force impact by electrohydraulic shock. At the same time, due to the high penetrating ability of pulsed magnetic and mechanical shock physics fields, a malfunction of the electronic circuits of the detected object is captured through the body shell as an additional information feature.

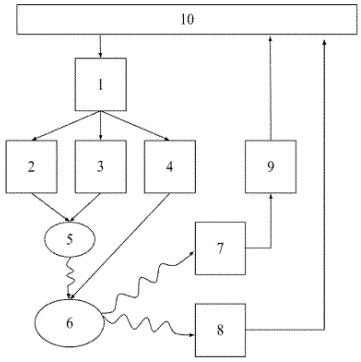

Fig. 1 Block diagram of the device

21: 2026/01696. 22: 2026/02/09. 43: 2026/10/09
51: G01S; H04B
71: GUANGXI ACADEMY OF SCIENCES, NANNING NORMAL UNIVERSITY
72: XU, Guilin, WU, Di, WU, Man, YAN, Xiaomin, LIU, Xiaoning
33: CN 31: 202310853803.0 32: 2023-07-12

54: BEIDOU OFFSHORE MULTIPATH INTERFERENCE ELIMINATION METHOD AND APPARATUS BASED ON WAVELET PACKET ANALYSIS

00: -

The present invention discloses a method and apparatus for eliminating Beidou offshore multipath interference based on wavelet packet analysis. The method includes: performing optimal wavelet packet decomposition on an ADC output signal to obtain a plurality of wavelet packet coefficients; setting a multipath detection threshold, detecting the plurality of obtained wavelet packet coefficients, identifying a wavelet packet coefficient, that exceeds the multipath detection threshold, as a multipath signal, and clearing the multipath signal to obtain processed wavelet packet coefficients; and performing inverse transform on the processed wavelet packet coefficients to obtain a time-domain signal after the multipath signal is deleted. Offshore Beidou

multipath signal interference is analyzed to provide the most suitable wavelet packet analysis parameters, such that the capacity to identity offshore Beidou multipath signals by means of wavelet packets is improved, and a Beidou receiver eliminates the offshore multipath signal interference more accurately.

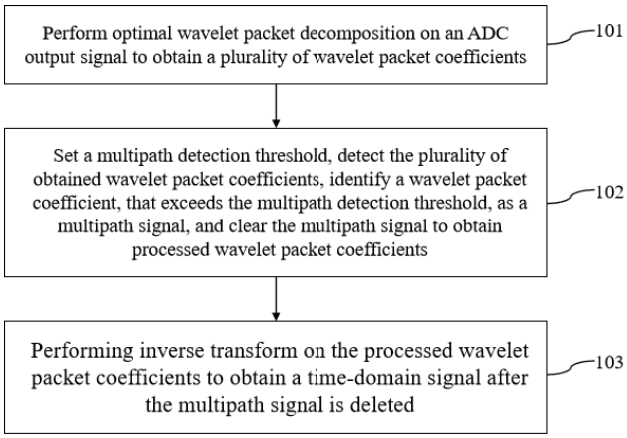

21: 2026/01720. 22: 2026/02/10. 43: 2026/10/09
51: A01C; A01H
71: SHANDONG AGRICULTURAL UNIVERSITY
72: ZHAO, Bin, WANG, Xingxing, HE, Zaiyu, DING, Xiangpeng, GUO, Xu, ZHAO, Hongchao
33: CN 31: 202510255497X 32: 2025-03-04
54: A HIGH-YIELD CULTIVATION METHOD FOR INTERCROPPING MAIZE VARIETIES WITH DIFFERENT PLANT ARCHITECTURES
00: -
The present invention relates to the field of maize planting technology, and particularly relates to a high-yield cultivation method for intercropping maize varieties with different plant architectures. The method comprises the following steps: (1) applying base fertilizer after land preparation, and then intercropping semi-compact maize and compact maize; (2) applying water-retaining organic fertilizer to the semi-compact maize at the seedling stage, and simultaneously applying topdressing fertilizer to both the semi-compact maize and compact maize at the jointing stage, the big bell-mouth stage, and the grain-filling stage; (3) harvesting at the maturity stage. The cultivation method of the present invention is convenient to operate and can be mechanized, enabling large-scale planting and promotion over extensive areas. It can improve the photosynthetic rate of plants, increase dry matter accumulation, optimize canopy structure, and increase yield. It also has the advantages of cost reduction and efficiency enhancement, ecological environmental protection, and increased production and efficiency, which are of great significance to the development of China's summer maize industry.

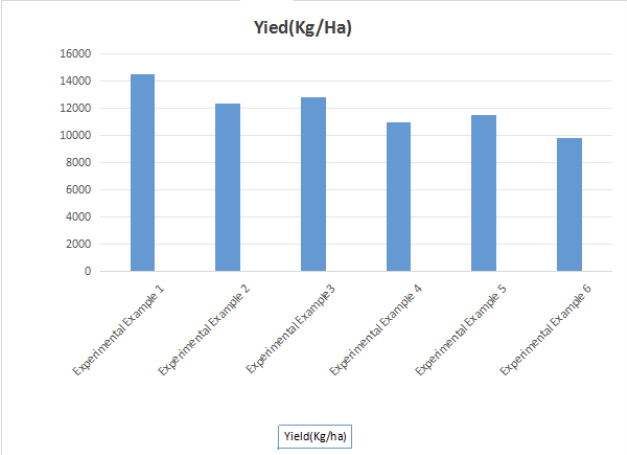

21: 2026/01721. 22: 2026/02/10. 43: 2026/10/09
51: G01F
71: COSCO SHIPPING TECHNOLOGY(BEIJING) CO., LTD
72: ZHANG, Chen, LI, Hanjie, WANG, Yajie, LI, Chunguang
33: CN 31: 2025116359722 32: 2025-11-10
54: DATA QUERY METHOD, APPARATUS, DEVICE AND MEDIUM
00: -
The present disclosure relates to the field of artificial intelligence technology, providing a data query method, apparatus, device, and medium.The method comprises:matching the data query statement according to a longest-string matching algorithm to obtain a list of determined terms, as the response to receiving a user’s data query statement; performing word segmentation on the data query statement from which all determined terms within the list of determined terms have been deleted, to obtain a list of terms to be determined;performing semantic retrieval in a preset knowledge base for each term to be determined, to update the list of determined terms and the list of terms to be determined; and then ending when the list of terms to be determined is empty or a preset iteration count is reached.By leveraging the longest string matching in the semantic knowledge base and the subsequent iterative optimization of segmentation results, the present disclosure effectively reduces segmentation

errors, enhances segmentation accuracy for complex texts, texts with omissions, and contextual follow-up queries, thereby making subsequent semantic analysis and entity recognition based on segmentation more reliable.

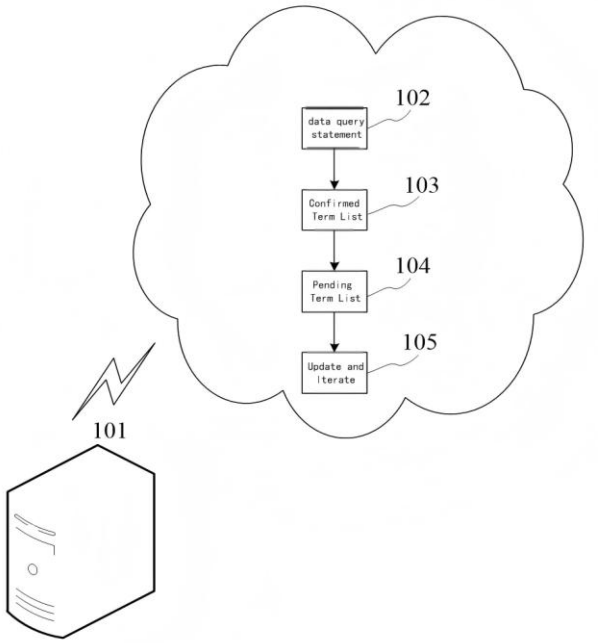

21: 2026/01722. 22: 2026/02/10. 43: 2026/10/09
51: G06F
71: JINLING INSTITUTE OF TECHNOLOGY
72: ZOU, Lingjun, ZHANG, Lifeng

54: DUAL-DETECTION MECHANISM-BASED 10G MAC BUS SHARING METHOD AND DEVICE

00: -

The present invention discloses a dual-detection mechanism-based 10G MAC bus sharing method and device, and belongs to the field of computer information technologies. The present invention ensures data security through a dual anomaly detection mechanism. It relies on a dynamic weight allocation algorithm to achieve intelligent scheduling of priority queues, and ensures the reliability and self-healing capability of high-speed transmission by using an asynchronous FIFO for clock domain crossing and a packet counter reset mechanism. This significantly enhances the interface security, transmission efficiency, and anti-interference capability of large-scale servers in multi-source data scenarios.

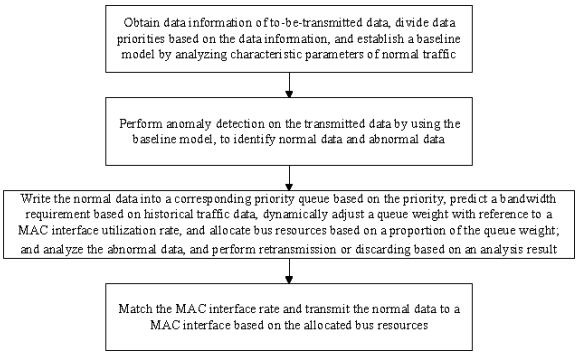

21: 2026/01728. 22: 2026/02/10. 43: 2026/10/26
51: A61K; C07K; C12N; A61P
71: BEIJING VJTBIO CO., LTD.
72: LUO, Haoshu, TAN, Zemin, YAN, Lin, WU, Bingchun, HAN, Guo
33: CN 31: 202310894799.2 32: 2023-07-20
33: CN 31: 202310941457.1 32: 2023-07-28

54: ANTIBODY CAPABLE OF BINDING TO INTERLEUKIN-31 OR ANTIGEN BINDING FRAGMENT THEREOF, AND PREPARATION METHOD THEREFOR AND USE THEREOF

00: -

Provided are an antibody capable of binding to interleukin-31 or an antigen binding fragment thereof, and a preparation method therefor and a use thereof. The antibody or the antigen binding fragment thereof has high affinity and high activity, and by blocking the binding of IL-31 and a receptor thereof, especially canine IL-31, the antibody or the antigen binding fragment thereof inhibits canine pruritic skin diseases, especially canine atopic dermatitis.

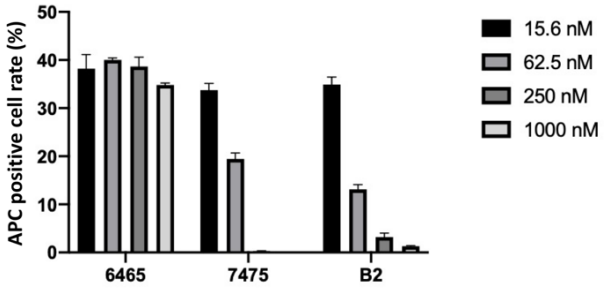

21: 2026/01764. 22: 2026/02/11. 43: 2026/10/12
51: H01L
71: Guilin University Of Electronic Technology, Guilin Yanchuang Semiconductor Technology Co., Ltd., Techshine Electronics Co., Ltd.
72: Miao CAI, Yongpei DENG, Daoguo YANG, Jianna ZHENG, Guolin LIN, Jianshu LU, Jian LI, Huazu WANG

54: HETEROGENEOUS PACKAGING SUBSTRATE WITH LOCALLY EMBEDDED GLASS CORE AND PREPARATION METHOD THEREOF

00: -

The present disclosure provides a heterogeneous packaging substrate with a locally embedded glass core and a preparation method thereof, and relates to the technical field of semiconductor packaging. The heterogeneous packaging substrate includes a core board provided with at least one mounting groove; at least one glass core embedded into the mounting groove and fixedly connected to the core board, where the glass core is provided with through glass via, and conductive metal is arranged in the through glass via; a first wire layer arranged on one side of the core board and electrically connected to the conductive metal; a second wire layer arranged on the other side of the core board and electrically connected to the conductive metal; and a chip arranged on one side, facing away from the core board, of the first wire layer, arranged above the glass core, and electrically connected to the first wire layer. In the technical solution of the present disclosure, by locally embedding the glass core into the core board instead of replacing the entire core board with glass, expansion degrees of the glass core and the chip are similar during temperature distortion, the problem of warping can be solved, the glass core is integrated into an existing process flow, and the difficulty of a large-area glass manufacturing process is avoided, which is conducive to reducing costs and technical difficulties.

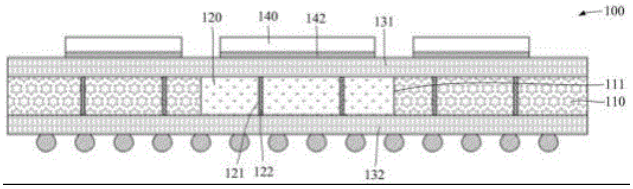

21: 2026/01768. 22: 2026/02/11. 43: 2026/10/06
51: G01N
71: Jiangnan University
72: LIU, Yang, JIA, Luzi, HAN, Mingxu
33: CN 31: 202510926627.8 32: 2025-07-07

54: BASE PAIR FLUORESCENCE INTENSITY ANALYSIS METHOD BASED ON CNN MODEL AND EXPLAINABLE LEARNING

00: -

Provided is a method for analyzing base pair fluorescence intensity based on a CNN model and explainable learning, which relates to the technical field of bioinformatics and computational biology. The method includes: data preprocessing: standardizing base sequences and fluorescence intensities, and enforcing a uniform sequence length by assertion; constructing a CNN model: including two Conv1D layers, a MaxPooling1D layer, and a fully connected layer, and training using MSE; PFI analysis: perturbing single/two/three-base combinations, and calculating performance differences to generate a global importance ranking; SHAP analysis: calculating SHAP values in batches and aggregating the same to generate a “position-base” local ranking; and rule generation: integrating the global and local rankings, selecting candidate positions, calculating multi-base effect sizes and synergistic values, and recording rules satisfying thresholds. By integrating a CNN with explainable methods, the present disclosure achieves high-precision prediction of fluorescence intensity of base sequences and elucidation of multi-base regulatory mechanisms, thereby overcoming deficiencies of conventional models.

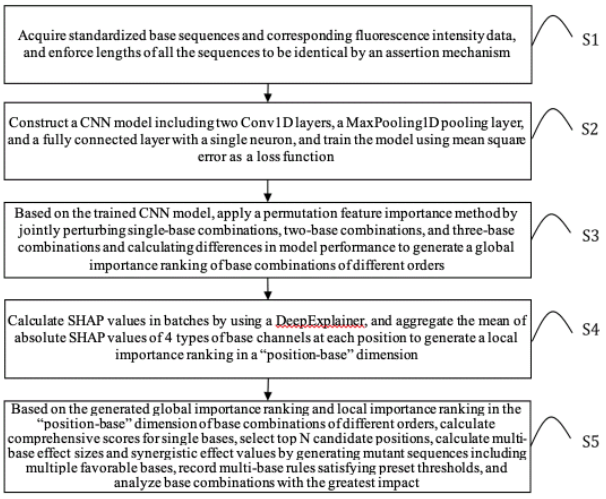

21: 2026/01777. 22: 2026/02/11. 43: 2026/10/06
51: C12H
71: Shandong Yingwosi Biotechnology Co., Ltd., Shandong Agricultural University
72: Jin Yuhong, Hao Xinshu, Bao Yuanqi, Li Chunyu, Zhang Zilong
33: CN 31: 2025109515603 32: 2025-07-10

54: IMPREGNATION AND PRESSING DEVICE FOR ADDING AUXILIARY INGREDIENTS TO FERMENTATION MASHES FOR FERMENTED WINES AND METHOD FOR USING SAME

00: -
The present invention relates to an impregnation and pressing device for adding auxiliary ingredients to fermentation mashes for alcoholic drinks, and a method for using the same. The impregnation and pressing device includes a supporting cover plate, wherein a bottom surface of the supporting cover plate is fixedly connected to several vertically extending guide rods. An impregnation barrel is arranged below the supporting cover plate, and the impregnation barrel is slidably connected to the several guide rods. The impregnation barrel is open at an upper end and closed at a lower end; a side wall of the impregnation barrel is provided with impregnation holes; and the supporting cover plate is provided with a first drive mechanism for driving sliding of the impregnation barrel. According to the present invention, the impregnation barrel is inserted into the fermentation tank from a feed inlet at a top of the fermentation tank; the impregnation barrel slides downward along the guide rods to move downward for immersion into clear-juice fermentation mashes; the fermentation mashes impregnate an interior of the impregnation barrel through the impregnation holes, allowing for impregnation and fermentation of auxiliary ingredients in the impregnation barrel and more thorough extraction of active components from the auxiliary ingredients during a fermentation process; and once an impregnation effect is achieved, the device is removed from the fermentation tank, such that residues of the auxiliary ingredients can be separated, thereby achieving convenience in use.

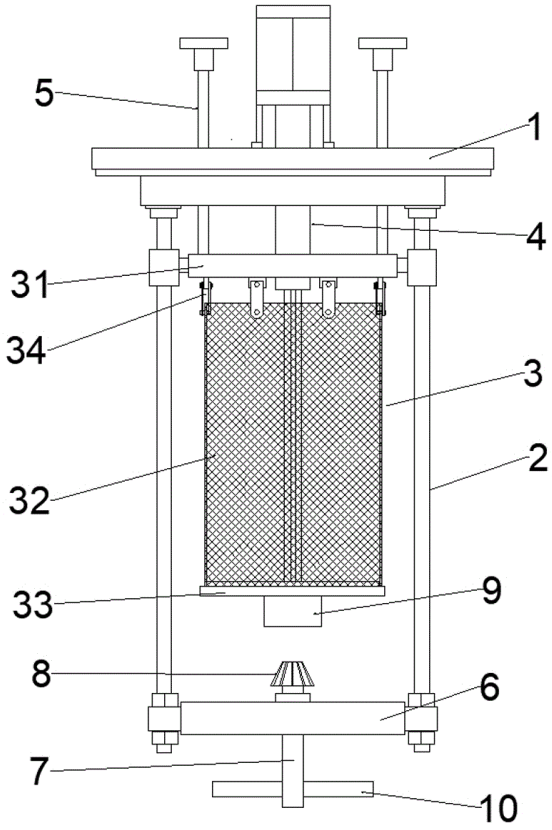

21: 2026/01779. 22: 2026/02/11. 43: 2026/10/12
51: A47J
71: FURNISS, Glen Richard, FURNISS, Yolandi
72: FURNISS, Glen Richard, FURNISS, Yolandi
54: JAFFLE PAN SUPPORT DEVICE
00: -
This invention relates to a jaffle pan support device. In particular, the invention relates to a jaffle pan support device for positioning a jaffle pan over a heat source whilst cooking. The jaffle pan support device includes a stand, having an upper cooking platform shaped and dimensioned to support a cooking vessel of a jaffle pan above a heat source, and a base operable to support the stand on a surface proximate the heat source. The upper platform is shaped such that the cooking vessel of the jaffle pan projects below the horizontal plane of the upper platform. The stand further includes a handle support for retaining the handle of the jaffle pan such that the jaffle pan remains substantially level with the horizontal plane of the upper platform.

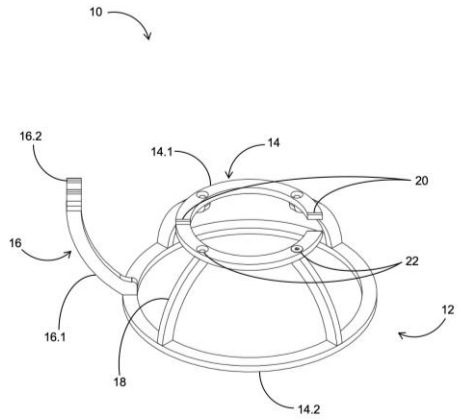

21: 2026/01782. 22: 2026/02/11. 43: 2026/11/09
51: B24B
71: NANJING SANMU INTELLIGENT TECHNOLOGY CO., LTD.
72: TANG, Haitao, WANG, Jing, KANG, Tiankui, QIN, Chi
33: CN 31: 202511195750.3 32: 2025-08-26

54: ADJUSTABLE METAL PIPE FITTING INNER WALL POLISHING DEVICE FOR MECHANICAL PROCESSING

00: -

The present application discloses an adjustable metal pipe fitting inner wall polishing device for mechanical processing, belonging to the technical field of metal pipe fitting processing. The adjustable metal pipe fitting inner wall polishing device for mechanical processing includes a base, and a polishing mechanism is provided on a top of the base. The rotating rod is rotated, and the rotating rod is threadedly connected with two second threaded rods disposed inside it, thus each of the two second threaded rods can push the respective mounting sleeve block to move, so that each polishing block inside the mounting sleeve block is attached to the inner wall of the metal pipe fitting. The first servo motor drives the first threaded rod to rotate inside the longitudinal movement groove, so that the first threaded sleeve block drives the connecting frame to move. The second servo motor drives the connecting rod to rotate, so that the two polishing blocks move and perform rotational polishing inside the metal pipe fitting. It is convenient to perform mobile polishing treatment on the inner walls of different metal pipe fittings, to be adjusted according to the sizes of the metal pipe fittings, and to install and disassemble the polishing blocks, featuring simple and quick operation and easy use.

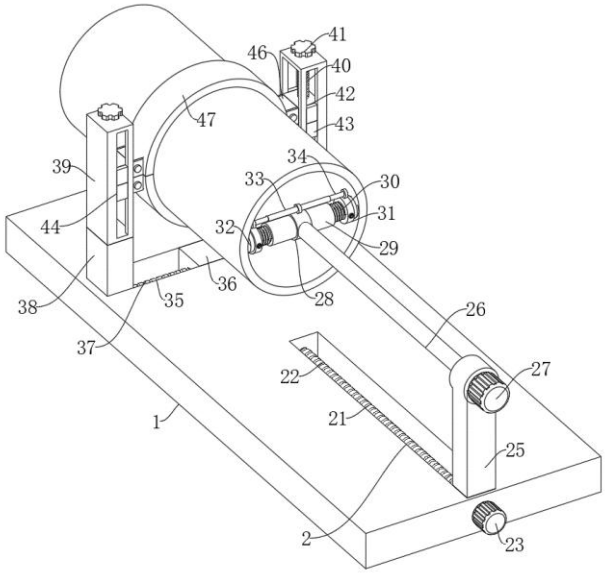

21: 2026/01807. 22: 2026/02/12. 43: 2026/10/20
51: C22B
71: RELIANCE INDUSTRIES LIMITED
72: CHELLI, Venkatanarasimha Rao, DAGGUPATI, Sateesh, JHA, Ajay, SANYAL, Nibedita, PATEL, Sudhir, GIRACHH, Kalpesh, MANDAL, Sukumar, DAS, Asit
33: IN 31: 202521024649 32: 2025-03-19

54: A PROCESS FOR EXTRACTING NICKEL FROM GASIFIER SLAG

00: -

The present disclosure relates to a process of extracting nickel from gasifier slag. The process integrates salt roasting with leaching to maximize nickel extraction from the gasifier slag. The leaching is performed in two stages, utilizing a chelating agent and an acidic solution as a chelating agent to optimize nickel recovery. The process of the present disclosure consumes minimum chemicals and additives and achieves nickel production with a purity of up to 99%, ensuring high-quality output and superior performance. The process of the present disclosure is simple to perform, energy-efficient and commercially viable as intermediate streams are recyclable.

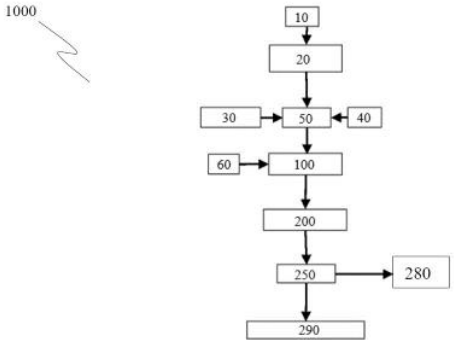

21: 2026/01808. 22: 2026/02/12. 43: 2026/10/19
51: A61L
71: The First Affiliated Hospital of Hainan Medical College
72: Zhuling Guo, Miaomiao Zhang, Tao Wen, Mingwang Cui, YuLei Dong, Hui Chen, Zhengrou Wang, Kezhen Yang, Shihui Zhao
54: DENTAL INSTRUMENT STORAGE AND DISINFECTION BOX
00: -
Disclosed in the present disclosure is a dental instrument storage and disinfection box, including a base plate, where a shelf embedded and connected inside the base plate, a sealing cover is provided at an upper end of the base plate, a nameplate is provided at an upper end of the sealing cover, a storage structure is connected to an upper end of the shelf, and includes an insertion hole, the insertion hole is connected to the upper end of the shelf, an identification line is connected to the upper end of the shelf, an inner groove is formed inside the base plate, sliding rods are connected inside the base plate, sliding grooves are formed in the upper ends of the sliding rods, and a nickel-titanium file is embedded and connected inside the identification line. The dental instrument storage and disinfection box of the present disclosure not only facilitates the classified storage of root canal treatment instruments, making them easy to take without having to search inside, but also reduces the probability of cross-contamination of the instruments. Moreover, the number of times of use is recorded by rotating a counting rubber ring to perform counting after the nickel-titanium file is used, thereby improving the operational efficiency.

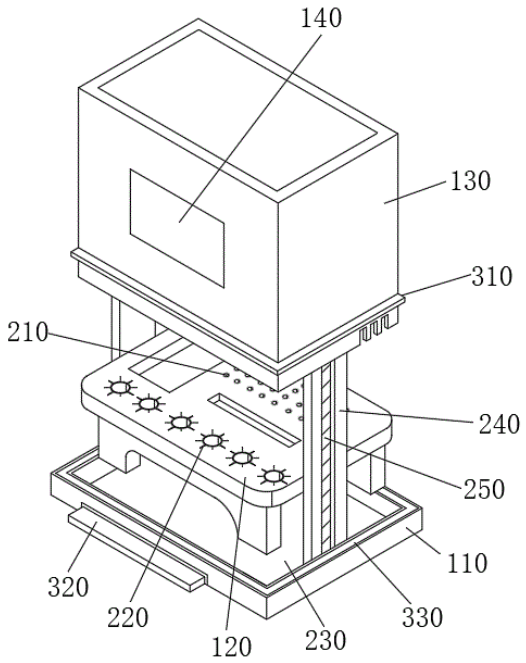

21: 2026/01841. 22: 2026/02/12. 43: 2026/10/12
51: H01M; H02J
71: WUXI DIVISION OF NO.703 RESEARCH INSTITUTE OF CSSC
72: SUN, Peng, SUN, Xidong, CHEN, Guozhong, GU, Zhengwei, WANG, Bolun
33: CN 31: 202410826863.8 32: 2024-06-25
54: MICRO-GRID DISTRIBUTED ENERGY STORAGE SYSTEM AND BATTERY SOC BALANCE CONTROL METHOD THEREFOR
00: -
The present application discloses a microgrid distributed energy storage system and a battery SOC balance control method therefor, which relates to the field of microgrid operation control. The method includes: calculating an SOC standard deviation of target battery clusters in an energy storage system; if the standard deviation is less than or equal to a first SOC threshold, adopting an average power method for power allocation; if the standard deviation is greater than the first SOC threshold but less than a second SOC threshold, adopting a weighting coefficient method; and if the standard deviation is greater than or equal to the second SOC threshold, adopting a segmented weighting coefficient method. A power allocation result is sent to each power conversion system through an energy storage coordination controller to perform corresponding charging and discharging, so

that SOC of each of the battery clusters can be quickly and smoothly balanced.

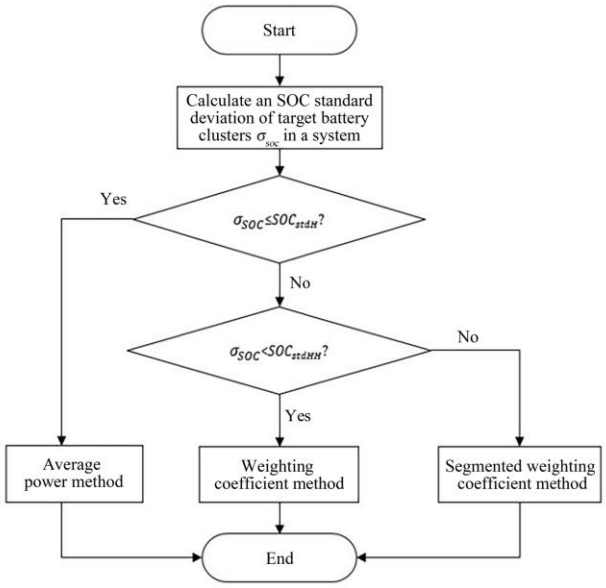

21: 2026/01848. 22: 2026/02/13. 43: 2026/10/06
51: B02C
71: ANHUI INSTITUTE OF MEDICINE
72: CAO Yuzhu, YANG Haoran
33: CN 31: 202610083576.1 32: 2026-01-22
54: MEDICINE DISPENSING AND GRINDING DEVICE
00: -
The invention discloses a medicine dispensing and grinding device, which relates to the technical field of grinding equipment. The invention comprises a grinding chamber and a blade anti-sticking component, wherein a grinding ring is rotatably connected in the grinding chamber, the blade anti-sticking component comprises a conveying barrel; the conveying barrel is arranged in the grinding chamber, and a rotating rod is rotatably connected in the conveying barrel; the peripheral surface of the rotating rod is fixedly connected with an auger blade; the peripheral surface of the rotating rod is fixedly connected with a lug plate, and the lug plate is symmetrically and slidably connected with two impact rods; the impact rod penetrates and is arranged on the auger blade in a sliding way; a plurality of rubber balls are uniformly and fixedly connected to the peripheral surface of the impact rod; the end of the impact rod is fixedly connected with a guiding ball. When in use, the particles which do not pass through the eccentric screen hopper are re-conveyed to the right above the grinding ring through the auger blades, and a plurality of rubber balls periodically hit the blades during the rotation of the auger blades, so that the powder can be prevented from caking on the blades, and the use effect of the device is further improved.

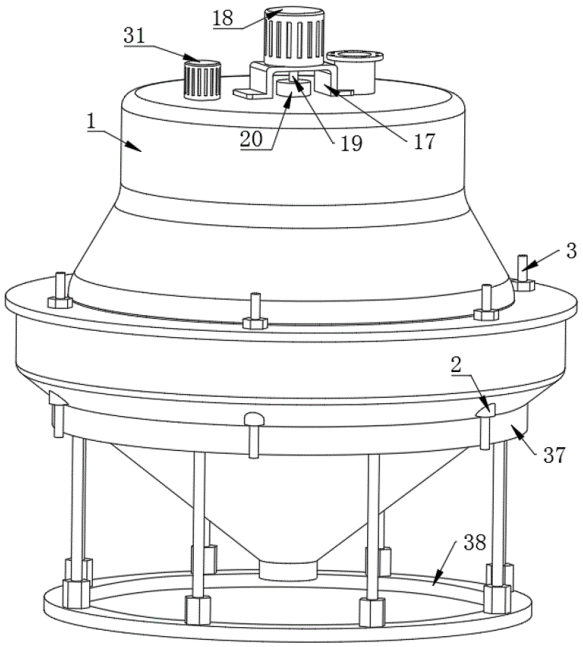

21: 2026/01851. 22: 2026/02/13. 43: 2026/10/12
51: E04G
71: BOTHA, Cornelius Johannes
72: BOTHA, Cornelius Johannes
54: CONSTRUCTION AID
00: -
A construction aid for temporarily supporting and maintaining an elongate vertical reference member in a desired orientation during construction, without external stays or ground bracing, which includes an anchoring interface configured to be received in or against a substrate, such as an at least partially constructed masonry wall, so that a portion of the anchoring interface projects outwardly for engagement, a support interface, preferably including a resilient portion, is mounted or mountable on the exposed portion of the anchoring interface. When the reference member is placed against a contact surface of the support interface, elastic deformation generates a biasing interaction which stabilises the support interface relative to the anchoring interface and substrate, thereby retaining

the reference member in the desired (e.g., plumb) orientation.

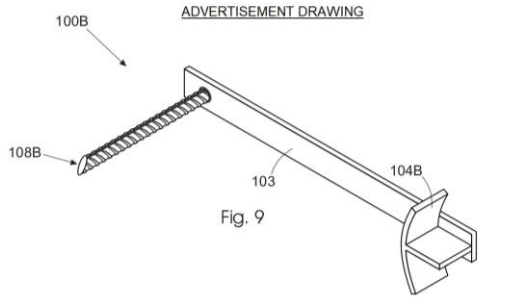

Fig. 9

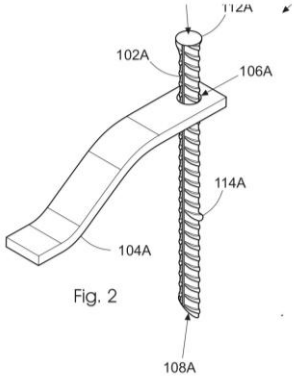

Fig. 2

21: 2026/01909. 22: 2026/02/12. 43: 2026/10/13
51: F02B; F02M
71: WUXI DIVISION OF NO.703 RESEARCH INSTITUTE OF CSSC
72: LV, Yulin, HUA, Jun, CHEN, Tiantian, YU, Jiayao, JI, Ran
33: CN 31: 202410460831.0 32: 2024-04-17

54: FUEL SYSTEM OF EMERGENCY DIESEL POWER GENERATOR SET FOR NUCLEAR POWER STATION

00: -

Provided is a fuel system of an emergency diesel generator set for a nuclear power plant, including a diesel engine, an internal circulation unit, a leakage fuel unit, a fuel conveying unit, a daily fuel tank, a tank truck fuel discharging unit, and a main fuel storage tank; a fuel inlet pipe, fuel injection pump fuel discharging pipes, and a high-pressure fuel pipe leakage pipe are provided in the diesel engine; the internal circulation unit achieves fuel supply from the daily fuel tank to the diesel engine, and conveys cooled return fuel from the diesel engine to the daily fuel tank; the fuel conveying unit is connected to the main fuel storage tank and the daily fuel tank; and the tank truck fuel discharging unit conveys the fuel that is filtered from the tank truck to the main fuel storage tank.

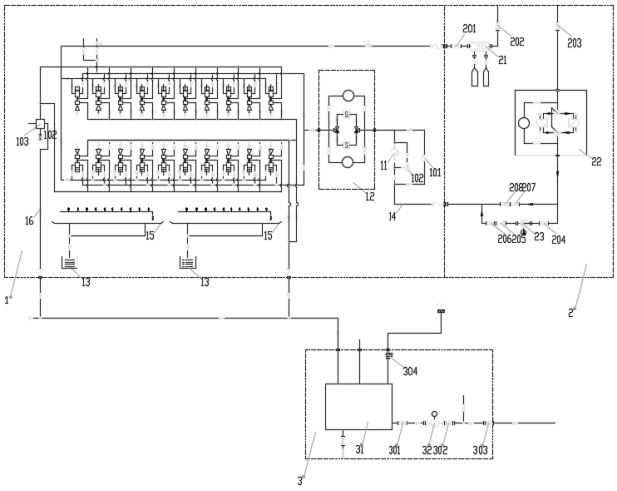

21: 2026/01935. 22: 2026/02/17. 43: 2026/10/06
51: C01B
71: KRISP TECHNOLOGIES, INC.
72: SARGSYAN, Stepan, KOBELYAN, Artur, GALOYAN, Levon, HAKOBYAN, Kajik, SHAHBAZYAN, Rima, BAGHDASARYAN, Daniel, HASRATYAN, Ruben, HAKOBYAN, Nairi, ALEKSANYAN, Hayk, TONOYAN, Tigran, HOVSEPYAN, Aris
33: US 31: 63/528,251 32: 2022-06-07

54: GENERATING PARALLEL DATA FOR REAL-TIME SPEECH FORM CONVERSION

00: -

Techniques are described for generating parallel data for real-time speech form conversion. In an embodiment, based at least in part on input speech data of an original form, a speech machine learning (ML) model generates parallel speech data. The parallel speech data includes the input speech data of the original form and temporally aligned output speech data of a target form different than the original form. Each frame of the input speech data temporally corresponds to the corresponding output speech frame of the target speech form and contains a same portion of the particular content. The techniques further include training a teacher machine learning model that is offline and is substantially larger than a student machine learning model for converting speech form. Transferring “knowledge” from the trained Teacher model for training the Production Student Model that performs

the speech form conversion on an end-user computing device.

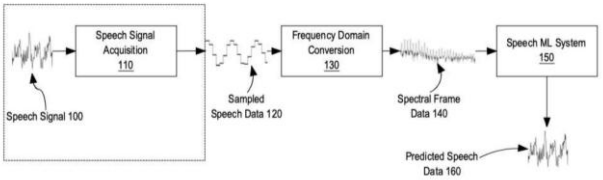

21: 2026/01992. 22: 2026/02/18. 43: 2026/10/13
51: B01D
71: SCHEWITZ, Larry
72: SCHEWITZ, Larry
54: A LIQUID FILTER ELEMENT AND COMPONENTS THEREOF
00: -

A liquid filter element (12) with at least one resiliently flexible member (10) is provided. The liquid filter element (12) comprises an elongate support frame (14) adapted to be covered by a porous filter sleeve (16) through which liquid is to pass upon filtration, wherein at least one resiliently flexible member (10) is provided which is adapted to flex towards an axis (18) of the support frame (14) when the liquid is filtering through the sleeve (16), and to flex away from the axis (18) of the support frame (14) when the liquid stops filtering through the sleeve (16) to thereby bloat the sleeve (16) and assist in removing accumulated filtration aid or dirt from the sleeve (16).

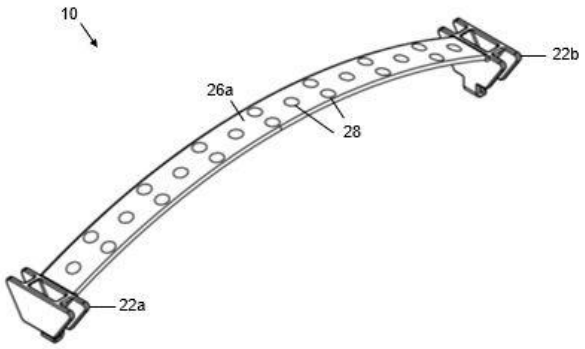

21: 2026/02022. 22: 2026/02/19. 43: 2026/10/13
51: G06F; G06N; G06Q
71: TTU Holdings Limited
72: COOGAN, Lance Reginald Charles
54: TOOL FOR MULTI-SOURCE BIODIVERSITY ASSESSMENT
00: -

Example methods and systems are directed to an automated tool for generating a biodiversity indicator. First data identifying a plurality of species associated with a geographic region is accessed. Second data is accessed that comprises, for each species, a reference value of each of a plurality of biodiversity metrics. Third data is automatically generated comprising, for each species, a current value of each of the plurality of biodiversity metrics, the third data being generated based on source data from a plurality of data sources comprising at least two of ground-based tracking data, satellite monitoring data, aerial sampling data, environmental DNA collection data, or bioacoustic monitoring data. A biodiversity indicator for the geographic region is generated based on at least the second data and the third data. A graphical element that includes the biodiversity indicator is automatically generated and presented at a user device.

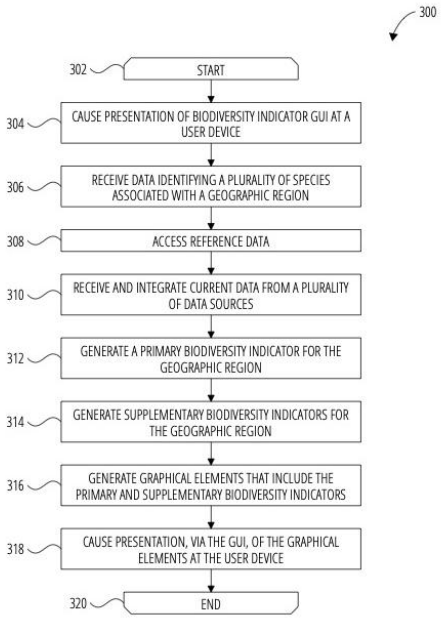

21: 2026/02028. 22: 2026/02/19. 43: 2026/10/13
51: G06F
71: KRAVCHENKO, Artem Aleksandrovich
72: KRAVCHENKO Artem Aleksandrovich, CHERNYAEV Maksim Andreevich
33: RU 31: 2025110713 32: 2025-04-24
54: SYSTEM FOR GENERATING A DATABASE QUERY BASED ON WEB CONTENT ANALYSIS USING GRAPHICAL USER INTERFACE
00: -

The proposed solution relates to computer technology, particularly to methods for automatic database query generation based on web content analysis. The problem to be solved by the claimed invention is automatic generation of an accurate database query for comparing items presented on an external resource against the International Classification of Goods and Services (Nice Classification) stored in a database. The objective is to improve the accuracy of queries to the database that stores the Nice Classification based on automated analysis of items on an external resource. The objective is achieved by a method for generating a database query, which is performed by a processor of a computer device, based on web content analysis and extracting of embedded entries from the hierarchical structure of the analyzed web content.

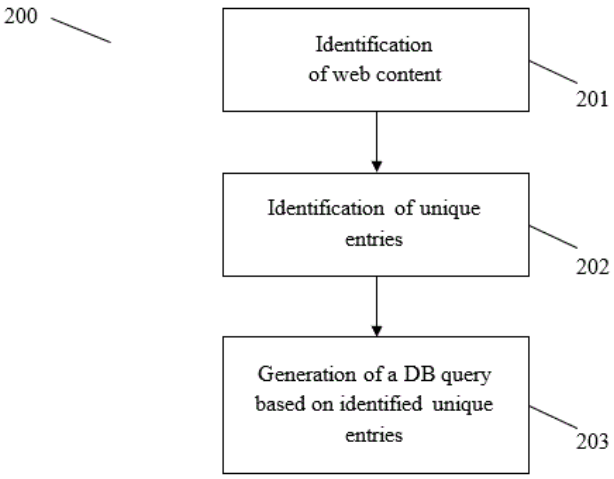

21: 2026/02032. 22: 2026/02/19. 43: 2026/10/14
51: G06F
71: KRAVCHENKO, Artem Aleksandrovich
72: KRAVCHENKO Artem Aleksandrovich, CHERNYAEV Maksim Andreevich
33: RU 31: 2025110715 32: 2025-04-24
54: DEVICE FOR GENERATING A DATABASE QUERY BASED ON WEB CONTENT ANALYSIS
00: -
The proposed solution relates to computer technology, particularly to methods for automatic database query generation based on web content analysis. The problem to be solved by the claimed invention is automatic generation of an accurate database query for comparing items presented on an external resource against the International Classification of Goods and Services (Nice Classification) stored in a database. The objective is to improve the accuracy of queries to the database that stores the Nice Classification based on automated analysis of items on an external resource. The objective is achieved by a method for generating a database query, which is performed by a processor of a computer device, based on web content analysis and extracting of embedded entries from the hierarchical structure of the analyzed web content.

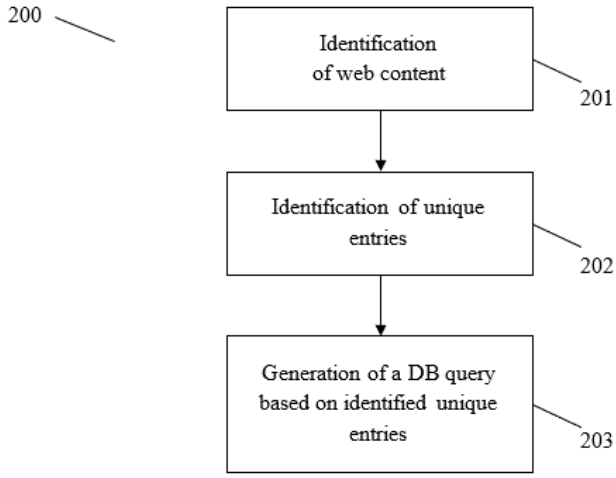

21: 2026/02033. 22: 2026/02/19. 43: 2026/10/14
51: G06F
71: KRAVCHENKO, Artem Aleksandrovich
72: KRAVCHENKO Artem Aleksandrovich, CHERNYAEV Maksim Andreevich
33: RU 31: 2025110716 32: 2025-04-24
54: DEVICE FOR GENERATING A DATABASE QUERY BASED ON WEB CONTENT ANALYSIS
00: -
The proposed solution relates to computer technology, particularly to methods for automatic database query generation based on web content analysis. The problem to be solved by the claimed invention is automatic generation of an accurate database query for comparing items presented on an external resource against the International Classification of Goods and Services (Nice Classification) stored in a database. The objective is to improve the accuracy of queries to the database that stores the Nice Classification based on automated analysis of items on an external

resource. The objective is achieved by a method for generating a database query, which is performed by a processor of a computer device, based on web content analysis and extracting of embedded entries from the hierarchical structure of the analyzed web content.

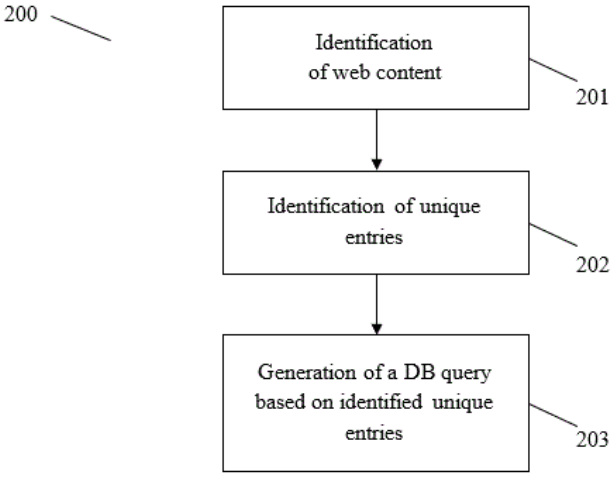

21: 2026/02112. 22: 2026/02/20. 43: 2026/11/03
51: B65D
71: COMPY PTY LTD
72: KHOURY, Edward Joseph, KHOURY, Ross Stanley
33: AU 31: 2023902416 32: 2023-07-31
54: CABLE TIE
00: -
A cable tie (10) comprising a head (12) having first and second apertures (18, 19). A first locking member (28) is located in the first aperture (18) and a second locking member (29) is located in the second aperture (19). A strap (14) is provided having a plurality of teeth (26) along a first side surface thereof such that the teeth (26) engage with the first locking member (28) and the second locking member (29) when inserted into the first and second apertures (18, 19). The first aperture (18) is provided with lugs (38) adjacent the second side surface positioned such that as the first end of the strap (14) is inserted into the first aperture (18), opposite edges of the first end of the strap (14) engage with the lugs (38).

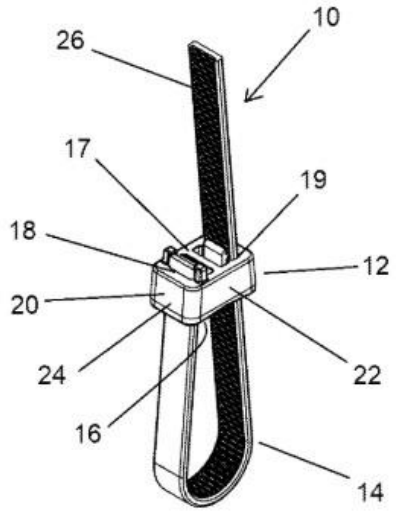

Fig 1

21: 2026/02243. 22: 2026/02/25. 43: 2026/10/26
51: B01F
71: FUJIAN LONGKING CO., LTD.
72: LIN, Yisheng, YANG, Zhenliang, WU, Yansheng, ZHANG, Kade, LIN, Zhiqiang, RAO, Yilong, WANG, Jianchun, ZHANG, Yuan, LIN, Chunyuan, GUO, Zhihang
33: CN 31: 202511435870.6 32: 2025-10-09
54: VENTURI TUBE AND VENTURI FEEDING DEVICE
00: -
A venturi tube and a venturi feeding device are provided, and belong to the technical field of flue gas purification equipment. The venturi tube includes a rotary throat part and a fixed throat part. A first channel and a second channel that are in communication with each other at an intersection are arranged inside the rotary throat part. The fixed throat part is accommodated at the intersection of the first channel and the second channel and is provided with a third channel. An inner diameter of the first channel is greater than an inner diameter of the second channel. By rotating the rotary throat part, the first channel or the second channel can be selectively in communication with the third channel, thus quickly forming a complete venturi flow channel with a large inner diameter or a small inner diameter to adapt to low-load and high-load flue gas working conditions.

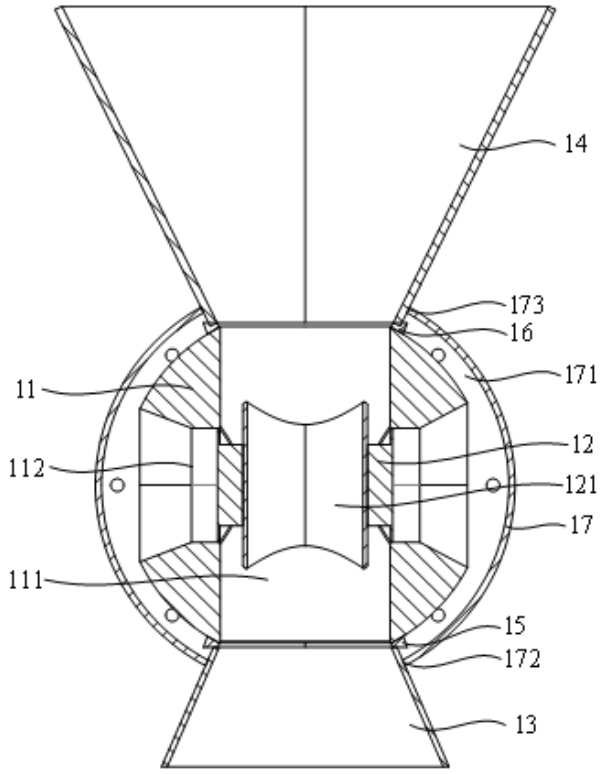

21: 2026/02296. 22: 2026/02/26. 43: 2026/10/16
51: G06F
71: China University of Mining and Technology
72: Zhang Chi, Zhou Min, Yang Weihao, Yang Zhijiang, Han Tao, Ren Yanlong

54: SIMULATION EXPERIMENT SYSTEM FOR DEEP GROUND ENGINEERING CONSTRUCTION WITH HIGH IN-SITU STRESS AND LARGE SPACE

00: -

The present invention relates to the technical field of deep ground engineering simulation experiments, and particularly to a simulation experiment system for deep ground engineering construction with high in-situ stress and large space. The system includes a deep-ground multi-environment collaborative simulation system, an intelligent adaptation system for construction conditions, a multi-dimensional dynamic testing system, and a digital twin collaborative control center, and all systems operate in closed-loop coordination according to preset logic. The specific process is as follows: the digital twin collaborative control center, as an overall coordination core, first receives experimental scenario requirements and completes the construction of the digital twin and the experimental pre-simulation. According to the simulation experiment system for deep ground engineering construction with high in-situ stress and large space of the present invention, the present invention overcomes the defects of independent operation of each module, poor synergy, lack of precise overall coordination and dynamic adaptation capabilities in existing systems, provides an integrated and highly collaborative experimental platform for deep ground engineering construction simulation, and adapts to simulation experiments of various working conditions including tunnel boring machine (TBM) construction, shield construction, freezing shaft sinking, stratum grouting and well flushing.

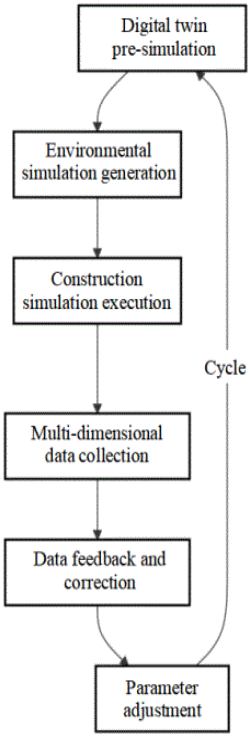

21: 2026/02297. 22: 2026/02/26. 43: 2026/10/16
51: G01N
71: China University of Mining and Technology
72: Zhang Chi, Yang Weihao, Yang Zhijiang, Han Tao, Wang Yansen

54: EXPERIMENTAL METHOD FOR TESTING FULL-FACE ROCK BREAKING MECHANISM UNDER HIGH GEOSTRESS ENVIRONMENT

00: -

The present invention relates to the technical field of rock breaking testing for deep underground engineering, and in particular to an experimental method for testing a full-face rock breaking mechanism under high geostress environment, including the following steps: S1, construction of

multi-field collaborative environment; S2, adaptation of dynamic stress loading; S3, implementation of full-face composite rock breaking; S4, synchronous acquisition of full-dimensional data; and S5, intelligent inversion of rock breaking mechanism. The present invention overcomes the defects of asynchronous multi-field simulation, static and rigid stress loading, poor adaptability of rock breaking modes, incomplete data acquisition and low accuracy of mechanism inversion in existing testing methods, provides reliable testing support for the optimization of full-face rock breaking equipment, the improvement of rock breaking processes and the construction safety of deep underground engineering, and adapts to rock breaking testing requirements of different types of rock masses including sedimentary rocks, magmatic rocks and metamorphic rocks as well as deep underground engineering scenarios including deep-buried tunnels, shafts and chambers.

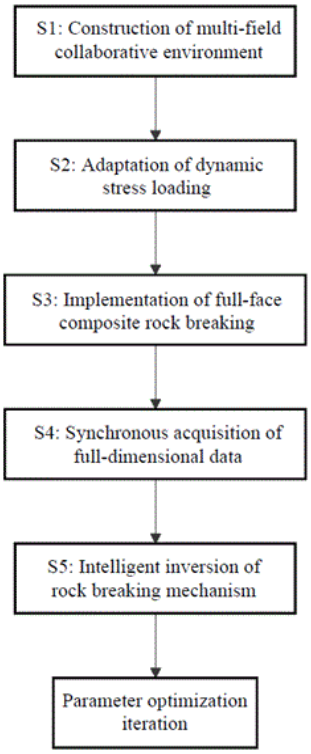

21: 2026/02299. 22: 2026/02/26. 43: 2026/10/16
51: G06F
71: China University of Mining and Technology
72: Zhang Chi, Zhou Min, Yang Weihao, Yang Zhijiang, Han Tao, Ren Yanlong

54: COMPREHENSIVE SIMULATION EXPERIMENTAL SYSTEM FOR MODULAR CONSTRUCTION TECHNOLOGY UNDER DEEP GROUND MULTI-FIELD COUPLING

00: -

The present invention relates to the technical field of scientific research equipment for deep ground engineering. Disclosed is a comprehensive simulation experimental system for a modular construction technology under deep ground multi-field coupling. The system includes a deep ground environment simulation system, a full-face mechanical rock-breaking tunneling simulation system, a stratum freezing and grouting simulation system, an underground structure axial load simulation system, a well-flushing system, and a testing system. The deep ground environment simulation system is configured as a closed reaction vessel to accommodate model rock and soil masses. The full-face mechanical rock-breaking tunneling simulation system is connected to an axial end of the vessel. A pipeline of the stratum freezing and grouting simulation system and a loading element of the underground structure axial load simulation system are pre-positioned inside the vessel. The present invention achieves full-process in-situ physical simulation of construction technologies under complex deep ground conditions.



21: 2026/02349. 22: 2026/02/27. 43: 2026/10/15

51: A61N
71: ZHONGSHAN HOSPITAL, FUDAN UNIVERSITY
72: WANG, Wenshuo, CONG, Shuo, WEI, Lai, WANG, Chunsheng
54: IMPLANTABLE CARDIAC PACEMAKER-BASED VENTRICULAR ELECTROGRAM-VENTRICULAR PRESSURE DUAL-SENSING SYSTEM AND METHOD
00: -
Disclosed is an implantable cardiac pacemaker-based ventricular electrogram-ventricular pressure dual-sensing system and method, pertaining to the technical field of medical devices. The system comprises a cardiac pacing module, and a ventricular electrogram sensing module, a ventricular pressure sensing module, a magnetic field signal processing module, and a central processor that are in signal connection with the cardiac pacing module, wherein the cardiac pacing module is used for controlling a cardiac pacemaker and detecting ventricular pressure and an external magnetic field; the ventricular electrogram sensing module is used for acquiring a ventricular electrogram signal; the ventricular pressure sensing module is used for acquiring a ventricular pressure signal; the magnetic field signal processing module is used for converting magnetic field strength into a magnetic field logic signal; and the central processor is used for generating a ventricular electrogram-sensing pacing signal or a ventricular pressure-sensing pacing signal according to the ventricular electrogram signal, the ventricular pressure signal, and the magnetic field logic signal which are received. The present disclosure maintains effective sensing of cardiac motion and demand pacing through a ventricular pressure signal, greatly improving surgical safety.

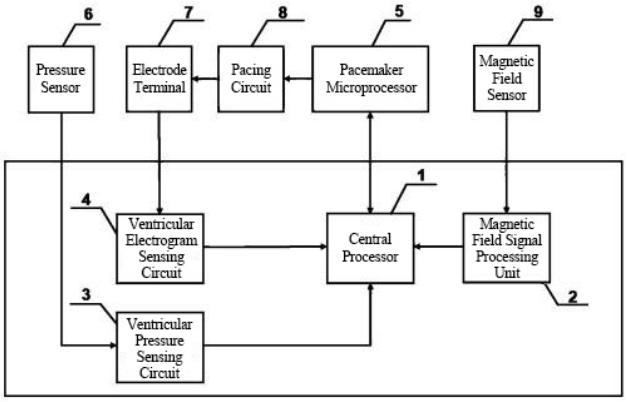

21: 2026/02350. 22: 2026/02/27. 43: 2026/10/16
51: E21B
71: ANHUI UNIVERSITY OF SCIENCE AND TECHNOLOGY
72: LI, Weili, WANG, Lei, CHEN, Lipeng
54: GAS EXTRACTION AND HOLE SEALING DEVICE
00: -
The present disclosure relates to the technical field of coal mine safety, and in particular to a gas extraction and hole sealing device. The gas extraction and hole sealing device includes a machine body. A sealing hole is fixedly mounted inside the machine body, a rotating column is fixedly mounted inside a rectangular mounting plate, and a reinforcing plate is fixedly mounted on one side of the rotating column away from the rectangular mounting plate. A sliding plate is fixedly mounted on one side of a sliding rail away from a slider, and a moving plate is fixedly mounted on one side of the sliding plate away from the sliding rail. A rotating shaft is fixedly mounted inside the moving plate, and a fixing plate is fixedly mounted at one end of the rotating shaft away from the moving plate. A small column is fixedly mounted on an outer surface of the reinforcing plate, and a suction cup is fixedly mounted at one end of the small column away from the reinforcing plate. A filter screen is fixedly mounted inside the machine body, to avoid not regulating a reinforcing position and achieve the stable reinforcement of various distances. The sliding rail, the slider, and the sliding plate are arranged inside the machine body. As the depth of the machine body inserted into the rock wall varies, the reinforcing device can move on the sliding rail according to the slider and the sliding plate, thus

achieving the function of reinforcing various distances.

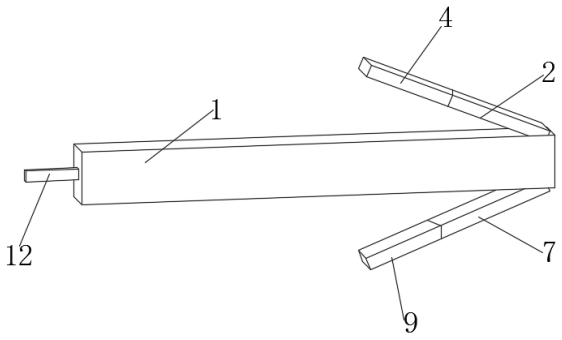

21: 2026/02360. 22: 2026/02/27. 43: 2026/10/16
51: H02J
71: SANMEN KANGCHUANG ELECTRONIC TECHNOLOGY CO., LTD
72: Chengyuan WANG
33: CN 31: 202311223405.7 32: 2023-09-21

54: BATTERY PACK SLEEP WAKE-UP METHOD AND CIRCUIT

00: -

The present invention relates to the technical field of batteries. Disclosed are a battery pack sleep wake-up method and a circuit. The method comprises the steps of: when a power supply switch switches from an off state to an on state, a wake-up circuit enters a first state and cuts off a starting current; using the energy storage characteristic of an energy storage capacitor in the wake-up circuit to perform loading time determination when the energy storage capacitor switches between charged and discharged states; when charging is finished, by means of change of the charged state of the energy storage capacitor before and after completion of energy storage of the energy storage capacitor, controlling the wake-up circuit to switch from the first state to a second state; and in the second state, the starting current being no longer cut off by the wake-up circuit and flowing into a main control chip. According to the present invention, the on/off characteristic in different charged and discharged states before and after the completion of the energy storage of the capacitor is used, so that control of on/off of a triode is achieved, the problem of starting failure caused by too small initial current of starting of a power tool without power dissipation is avoided, and rapid starting is achieved.

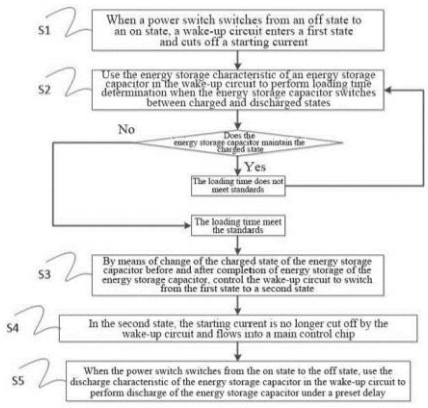

21: 2026/02415. 22: 2026/03/02. 43: 2026/10/27
51: A01G; A01N; A01P
71: Guangdong Institute of Tobacco Science
72: DENG, Haibin, WANG, Jun, WANG, Hang, SUN, Zheng, YANG, Liang, DING, Wei

54: A MICROBIAL PREPARATION, PREPARATION METHOD AND APPLICATION THEREOF

00: -

The present invention belongs to the field of microbial technology, and specifically relates to a microbial preparation and its preparation method and application. The effective components include Bacillus amyloliquefaciens LF-2 and Pseudomonas fluorescens LW-4. This microbial preparation has a good antagonistic effect on the bacterial wilt strain. It not only shows excellent control and growth promotion effects in indoor potted plants, but also its outstanding control effect has been confirmed in field experiments. It is a potential biological agent for the prevention and control of bacterial wilt disease and has a good prospect for development and application. Compared with chemical reagents, its control effect is greatly improved. It is expected to provide a new green and safe prevention and control solution for tobacco bacterial wilt.

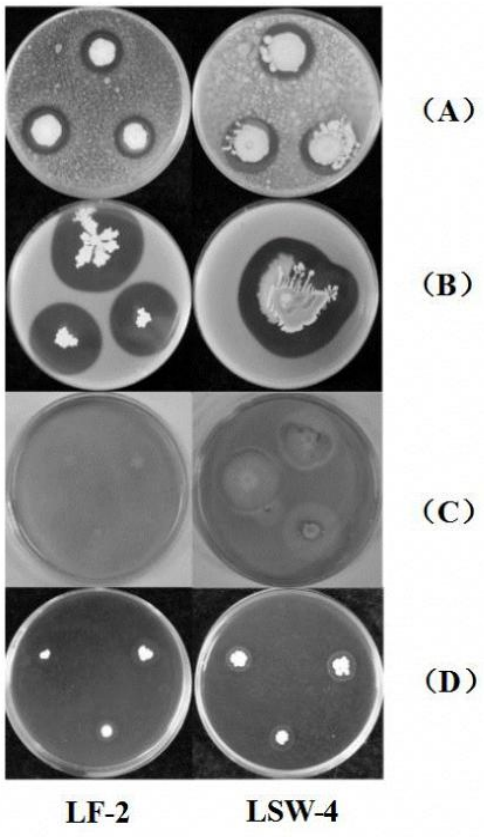

21: 2026/02416. 22: 2026/03/02. 43: 2026/10/27
51: G06N
71: Henan University of Urban Construction
72: ZHANG, Jingpu
54: METHOD AND SYSTEM FOR IDENTIFYING NCRNA PROTEIN-CODING POTENTIAL BASED ON MULTI-SCALE SEMANTIC AUGMENTATION AND FEATURE CALIBRATION
00: -
Disclose are a method and system for identifying noncoding RNA (ncRNA) protein-coding potential based on multi-scale semantic augmentation and feature calibration, relating to the field of bioinformatics, including: for an input ncRNA sequence, generating two augmented sequences through random data augmentation operation; performing multi-scale k-mer word segmentation for each augmented sequence to obtain a plurality of k-mer subsequence sets; inputting different k-mer subsequence sets into a pre-trained optimized Transformer encoder to obtain a sequence semantic representation vector; calculating multiple biostatistical features of the ncRNA sequence to form a statistical feature vector; performing bidirectional calibration and deep fusion on the statistical feature vector and the sequence semantic representation vector using a bidirectional feature calibration gating to obtain a fused feature vector; and inputting the fused feature vector into a classifier to predict the probability of ncRNA protein-coding potential. The present application improves accuracy of identification results of the ncRNA protein-coding potential.

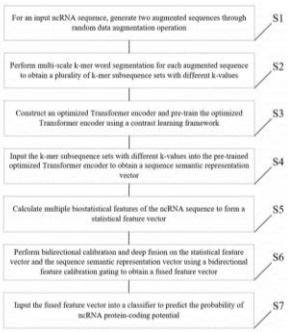

21: 2026/02417. 22: 2026/03/02. 43: 2026/10/27
51: G06Q
71: Huainan Normal University
72: Huanhuan Cheng, Bing Liu
54: MACHINE LEARNING-BASED PERSONALIZED PUSH SYSTEM FOR FINANCIAL SELF-SERVICE TERMINALS
00: -
The present invention relates to the technical field of financial data push, specifically a machine learning-based personalized push system for financial self-service terminals, comprising: a main control device in which a server unit and a main system are electrically connected, wherein the server unit is provided with a data processing unit and a database unit, the data processing unit is provided with a voice receiving module, and the main system is provided with a machine learning system. The beneficial effects are as follows: the voice receiving module arranged in the main control device can be used to conveniently receive user requirements; when a user needs to use or query certain data, operations can be performed according to voice prompts; when it is necessary to press a certain button, a lighting module is controlled to emit light, and the user only needs to press the illuminated button to complete the operation, so that even users with a low educational level can normally operate and learn the required data; in addition, the machine learning system can be used to learn and retrieve content

from the database unit, thereby making the push of required knowledge more convenient.

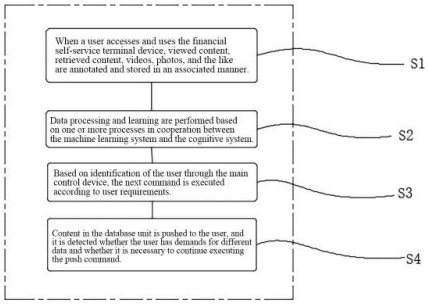

21: 2026/02419. 22: 2026/03/02. 43: 2026/10/06
51: F41B; F41F
71: CITIUS ALTIUS GMBH
72: HEINRICH, Frank
33: DE 31: 10 2023 123 898.1 32: 2023-09-05
54: DEVICE FOR LAUNCHING AIRBORNE OBJECTS
00: -
The invention relates to a device for launching airborne objects, in particular rockets and/or a capsule. In order to increase the payload of airborne objects or reduce the fuel consumption and/or increase the degree of reliability when launching airborne objects, a device is provided for launching an airborne object (20), comprising: a launch tube (10) which protrudes substantially vertically into the earth, said launch tube (10) being delimited in the lower region thereof, and at least one drive unit (30), which is separate from the airborne object (20) and which is arranged in the launch tube (10) below the airborne object (20), or a device for launching a flying object (20), comprising: a launch tube (10) which protrudes substantially vertically into the earth, said launch tube (10) being delimited in the lower region thereof, a cover device (40) at least in the upper region of the launch tube (10), and an air suction device (60) in order to evacuate air from the launch tube (10).

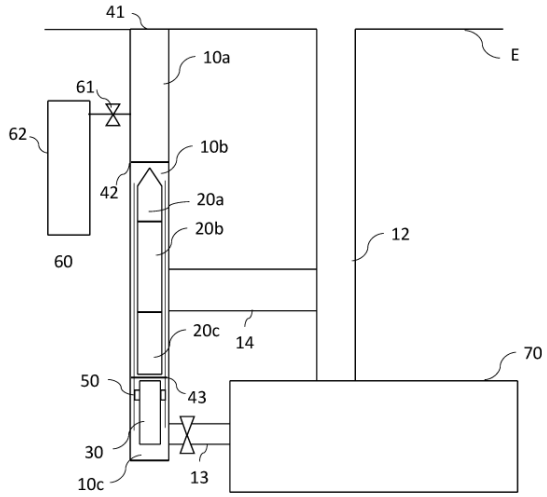

Fig. 1

21: 2026/02445. 22: 2026/03/03. 43: 2026/10/27
51: B02C
71: The First Affiliated Hospital of Chongqing Medical University
72: E Yang, Peng Chen, Xinhao Liu
54: MICRO-PARTICLE TISSUE PREPARATION DEVICE
00: -
A micro-particle tissue preparation device, comprising a charging port, a power handle, a power shaft, a sterile buffer, a cutting blade shaft, a cutting blade, and a tissue storage container. The power handle is provided with the charging port and has a built-in power system, one end of the power handle is connected to the power shaft, and the power shaft is fixed to the cutting blade shaft via a snap-fit structure, the cutting blade is installed at an end of the cutting blade shaft. The sterile buffer is sleeved over the exterior of the power shaft and the cutting blade shaft, with its two ends screwed respectively to the power handle and the tissue storage container. The power handle is made of a material suitable for low-temperature disinfection, the sterile buffer, the cutting blade shaft, the cutting blade, and the tissue storage container are disposable sterile medical materials, the tissue storage container is available in various capacity models. The device can efficiently prepare micro-particles from relatively tough or hard tissues, ensures sterility and tissue viability, offers convenient operation, and is adapted to the needs of autologous tissue transplantation in plastic surgery.

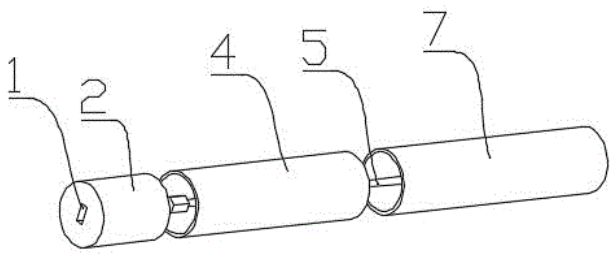

21: 2026/02446. 22: 2026/03/03. 43: 2026/10/27
51: A61B
71: Beijing Children's Hospital, Capital Medical University Baoding Hospital
72: Chen Chen

54: PORTABLE GAUZE COUNTING DEVICE FOR OPERATING ROOM

00: -

A portable gauze counting device for an operating room, which relates to the technical field of operating room auxiliary equipment. The device comprises a storage box and a hanging mechanism. The storage box includes a split-type storage housing and a movable side panel. One side of the storage housing is provided with an opening, and the hanging mechanism is assembled on the side of the storage housing away from the opening. The movable side panel can be movably closed over the opening. The hanging mechanism includes a reel box, inside which a retractable hanging rope is provided. One end of the hanging rope is fixed inside the reel box, and the other end passes through the side wall of the storage housing and is fixed to the movable side panel. The reel box is equipped with an elastic retraction component. Stretching the movable side panel causes the hanging rope to extend and tighten, forming a hanging station, which facilitates the differentiation of gauze of different length specifications for counting. The invention prevents gauze from falling to the ground and becoming contaminated, improves counting efficiency and accuracy, ensures surgical safety, reduces the workload of medical staff, and offers convenient operation and strong adaptability.

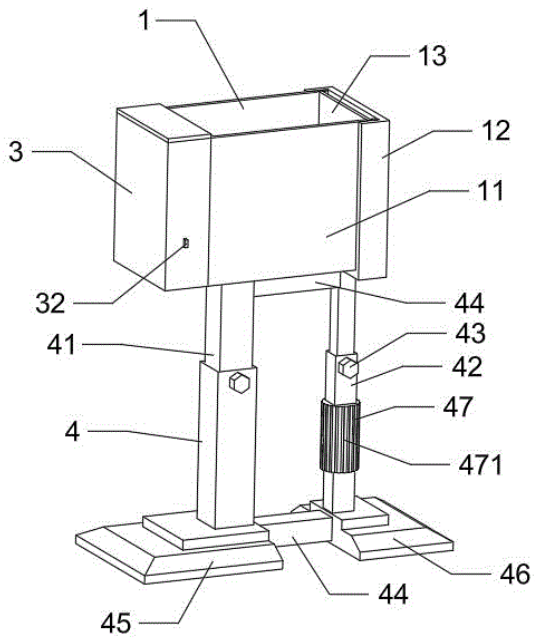

21: 2026/02447. 22: 2026/03/03. 43: 2026/10/27
51: A01G
71: Guangxi Academy Of Agricultural Sciences
72: ZHANG, Zongqiong, LI, Danting, NONG, Baoxuan, XIA, Xiuzhong, YANG, Xinghai, ZENG, Yu, FENG, Rui, GUO, Hui, XU, Zhijian, LEI, Dekun, WANG, Caixian, WANG, Hai, HE, Yi, LI, Weirong
33: CN 31: 202511756404.8 32: 2025-11-26

54: IDENTIFICATION METHOD FOR INCREASING THE INCIDENCE OF SOUTHERN RICE BLACK-STREAKED DWARF DISEASE

00: -

Provided is an identification method for increasing the incidence of southern rice black-streaked dwarf disease, including the following steps: (1) breeding of viruliferous white-backed planthoppers; (2) leaf sheath micro-wounding pretreatment for rice seedlings; (3) virus transmission of white-backed planthoppers, and inoculation to rice materials; and (4) rice transplanting and phenotypic statistical assessment of incidence. In terms of the overall synergistic effect, the selection of the viruliferous white-backed planthoppers provides the foundation for sufficient viral input; the leaf sheath micro-wounding pretreatment, combined with composite modified microneedles, ensures efficient virus translocation and tissue protection; and the optimized virus transmission environment creates conditions for a stable virus transmission process. These steps are mutually reinforcing and

progressively structured, ultimately leading to a stable increase in rice disease incidence. The identification period is shortened to be within 35 days. The problems of low incidence, long period, and poor accuracy of traditional methods are effectively solved.

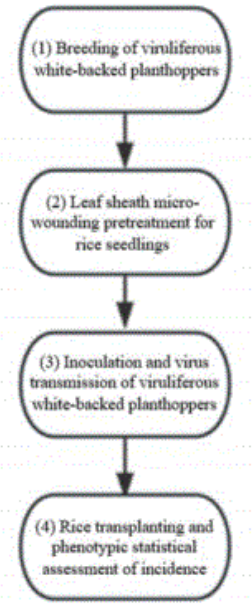

21: 2026/02448. 22: 2026/03/03. 43: 2026/10/27
51: C12N
71: Guangxi Academy Of Agricultural Sciences
72: ZHANG, Zongqiong, NONG, Baoxuan, XIA, Xiuzhong, YANG, Xinghai, LI, Danting, ZENG, Yu, FENG, Rui, CHEN, Can, LIANG, Yuntao, LIANG, Shuhui, JIANG, Xianbin, WANG, Caixian, HE, Yi, WANG, Hai, LI, Weirong
33: CN 31: 202511756503.6 32: 2025-11-26
54: METHOD FOR BREEDING RICE VARIETY RESISTANT TO SOUTHERN RICE BLACK-STREAKED DWARF DISEASE
00: -
Disclosed is a method for breeding a rice variety resistant to southern rice black-streaked dwarf disease, relating to the technical field of plant breeding. The method includes: subjecting rice seeds and seedlings to priming and combined stress treatment using a multi-stress mimicry trigger; then, applying a broad-spectrum epigenetic remodeling stabilizer to perform epigenetic modification fixation on a stress response state of plants to obtain F0-generation plants; and performing multi-generational planting and targeted screening of the F0-generation plants until a genetically stable line with stable traits is obtained. In the present invention, a heritable response memory against combined biotic and abiotic stresses is established and epigenetically fixed by sequentially applying specific chemical reagent combinations to parent plants within a specific time window. The final rice lines obtained by this method can stably inherit the combined traits of resistance to southern rice black-streaked dwarf virus and drought tolerance to progeny.

21: 2026/02449. 22: 2026/03/03. 43: 2026/10/27
51: A01G
71: Shandong Normal University
72: Zang Liguo, Fan Kun, Fu Li
33: CN 31: 2026101343622 32: 2026-01-30
54: A METHOD FOR CONSTRUCTING A GREEN PREVENTION AND CONTROL SYSTEM FOR WALNUT PESTS AND DISEASES
00: -
The present invention provides a method for constructing a green prevention and control system for walnut pests and diseases, relating to the technical field of walnut pest and disease control. It includes the following steps: establishing a feature database; the step of establishing the feature database includes collecting soil features, leaf surface features, trunk features, and fruit features of walnut pests and diseases and forming a feature database; determining high-incidence pest and disease types based on the feature database, and summarizing and presetting the causes of pests and diseases; establishing a prevention and control system according to the preset causes of pests and diseases; the step of establishing the prevention and control system includes a sky prevention system, a trunk prevention system, and a soil prevention system; establishing a feedback system; performing differentiated prevention and control according to the feedback results from the feedback system in step four; using a green utilization system. The present invention establishes a feature database, and based on the pest and disease characteristic data, summarizes and presets the causes of pests and diseases, which not only can control surface pests and diseases but also can prevent and control insect eggs.

21: 2026/02450. 22: 2026/03/03. 43: 2026/10/27
51: G06Q

71: Chengdu University of Information Technology
72: Yong Li
54: MULTI-SOURCE DATA FUSION RESOURCE ALLOCATION OPTIMIZATION DECISION SYSTEM
00: -
The invention provides a multi-source data fusion resource allocation optimization decision system, belonging to the technical field of data processing and resource allocation. The system comprises sequentially electrically connected modules: a data acquisition module, a data fusion module, a resource allocation analysis module, an optimization decision module, and an output module, which work collaboratively to achieve optimal resource allocation decision-making. The data acquisition module collects multi-type source data. The data fusion module integrates data through a weighted fusion algorithm. The optimization decision module derives the optimal plan based on quantitative objectives. The output module presents the plan and facilitates feedback iteration. The invention addresses the shortcomings of existing technologies, such as difficulties in integrating multi-source data and unscientific decision-making, adapts to multiple application scenarios, improves resource utilization and supply-demand matching, reduces costs, and features a simple structure and strong practicality, making it suitable for widespread adoption.

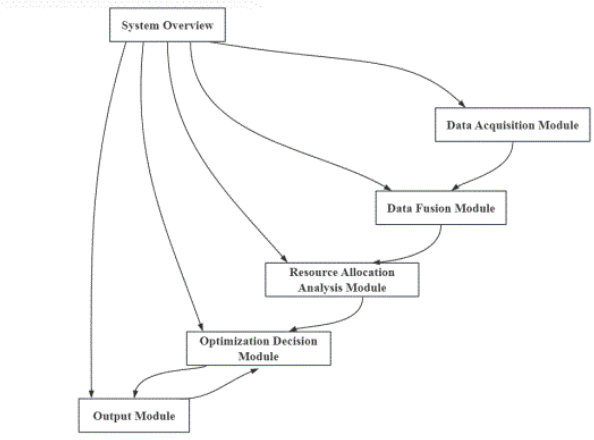

21: 2026/02451. 22: 2026/03/03. 43: 2026/10/27
51: F26B
71: MAYO MACS SA (PTY) LTD
72: GROBLER, Heinrich Christof, JOUBERT, Nicolaas Johannes Jackobus, JOUBERT, Johannes Wilhelmus
33: ZA 31: 2025/01565 32: 2025-02-20

54: DRYING BINS
00: -
This invention relates to a drying bin. In particular, the invention relates to a hexagonal drying bin for drying agricultural products, particularly nuts, that require controlled reduction of moisture content for storage or further processing. The drying bin includes a hexagonal prism shaped body, a product inlet, a product outlet, a deflection arrangement a ventilation system and an outlet. The hexagonal prism shaped body arranged in an operative upward orientation to define an enclosure. The product inlet, disposed towards a top of the body for feeding products to be dried into the body. The product outlet, disposed towards a bottom of the body for releasing products from the body. The deflection arrangement for deflecting products received from the product inlet before the product propagates to the product outlet. The ventilation system having an inlet for injecting heated air into the enclosure. The outlet for releasing heated air from the enclosure.

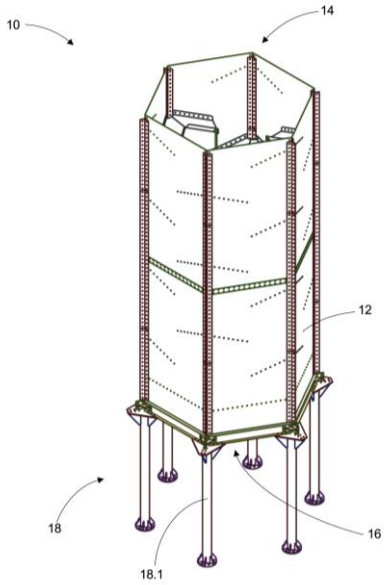

21: 2026/02454. 22: 2026/03/03. 43: 2026/10/27
51: B01J; G01N
71: GANSU ZHONGSHANG FOOD QUALITY INSPECTION AND TESTING CO., LTD.
72: WANG, Zongmei, XU, Ruotong, ZHOU, Hongxin, WU, Jianqiang, YUAN, Caixia, CHEN, Yanpeng
54: RAPID DETECTION KIT BASED ON B-CYCLODEXTRIN-FUNCTIONALIZED MAGNETIC MESOPOROUS CARBON COMPOSITE MATERIAL AND USE THEREOF

00: -
The present invention provides a rapid detection kit based on a ß-cyclodextrin-functionalized magnetic mesoporous carbon composite material and use thereof, and belongs to the technical field of analytical chemistry and food safety detection. The rapid detection kit of the present invention includes a dispersant, an extraction solution, an elution solution, and a magnetic separation tube, where the dispersant is the ß-cyclodextrin-functionalized magnetic mesoporous carbon composite material. The rapid detection kit of the present invention effectively addresses problems of complicated conventional pretreatment operations and large consumption of organic solvents, does not rely on complex equipment, greatly simplifies a sample pretreatment process, and significantly improves detection efficiency.

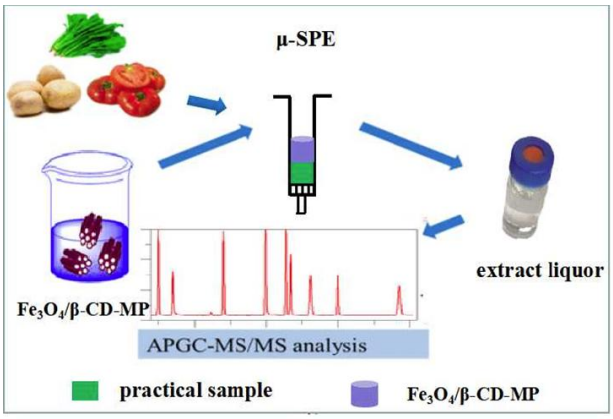

21: 2026/02455. 22: 2026/03/03. 43: 2026/10/29
51: G06T
71: HUNAN CANCER HOSPITAL
72: MAO, Xianhai, DUAN, Xiaohui, LUO, Jia, SHI, Lei, XIE, Wei, WANG, Xiaohui, CHEN, Pan, XIAO, Hua, LONG, Ying
33: CN 31: 2025119836704 32: 2025-12-25
54: HEPATOBILIARY IMAGE SEGMENTATION METHOD BASED ON 2.5D MODEL AND WATERSHED ANALYSIS
00: -
The invention provides a hepatobiliary image segmentation method based on a 2.5D model and watershed analysis, including: constructing a voxel-level liver segment label map through Couinaud liver segment structure analysis based on a portal vein center line; secondly, segmenting a hepatobiliary structure by using a 2.5D model guided by structure perception, wherein the model fuses three-dimensional context information and a structural attention mechanism to enhance the discrimination ability at complex junctions; then, in an intraoperative navigation stage, establishing a stable registration relationship between a structural numbering map and visual images acquired in real time, so as to realize dynamic posture adjustment and improve navigation stability; and finally, combining, by a postoperative lesion quantitative analysis module, the structural numbering map with a heat map of the model to perform attribution analysis, volume quantification and reliability calculation on a lesion area. The entire process integrates anatomical consistency, cross-stage adaptability and interpretability to meet the requirements of hepatobiliary surgery for precise surgical planning, real-time navigation and postoperative follow-up.

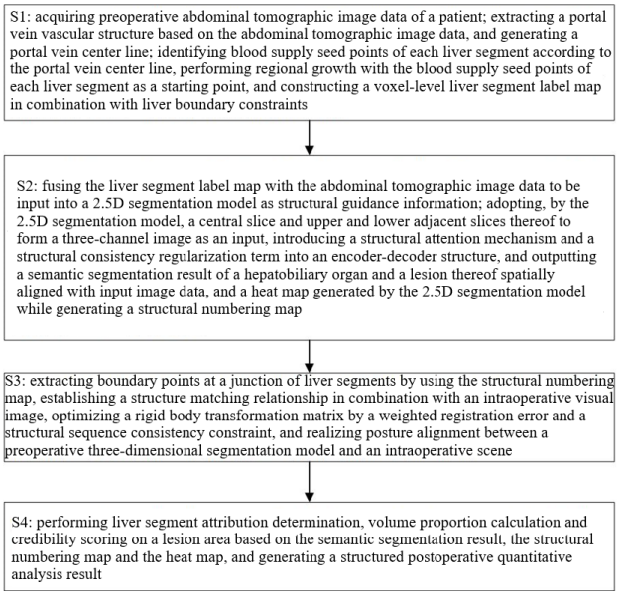

21: 2026/02456. 22: 2026/03/03. 43: 2026/10/29
51: A61K
71: GUANGXI BOTANICAL GARDEN OF MEDICINAL PLANTS
72: ZHAI, Yongjin, ZHANG, Zhanjiang, BAI, Longhua, PENG, Gaowei, WEI, Shugen, ZHU, Dan, LIN, Wei, LAN, Zuzai, PAN, Chunliu, LIANG, Wenjing, LI, Yuqiong, TAN, Guiyu, HUANG, Qi
54: METHOD FOR ENHANCING ROSMARINIC ACID CONTENT IN SARCANDRA GLABRA THROUGH VACUUM FREEZE DRYING PROCESSING
00: -

The present invention relates to the field of herb processing technology, and particularly to a method for enhancing rosmarinic acid content in Sarcandra glabra through vacuum freeze drying processing. The method specifically comprises the following steps: (1) harvesting aerial parts of Sarcandra glabra and removing impurities; (2) cutting the Sarcandra glabra obtained in step (1) into segments, sealing the segments, and freezing the sealed segments at -75 to -80°C for 24 to 30 hours; and (3) vacuum freeze drying the frozen Sarcandra glabra from step (2) for 40 to 55 hours to obtain dried Sarcandra glabra. The Sarcandra glabra medicinal herbs produced by the drying method of the present invention exhibits both a consistently high rosmarinic acid content and excellent process reproducibility.

21: 2026/02457. 22: 2026/03/03. 43: 2026/10/29
51: A61K
71: HUNAN CANCER HOSPITAL
72: MAO, Xianhai, DUAN, Xiaohui, LUO, Jia, SHI, Lei, XIE, Wei, WANG, Xiaohui, CHEN, Pan, XIAO, Hua, LONG, Ying
33: CN 31: 2025118067150 32: 2025-12-02
54: METHOD AND SYSTEM FOR QUANTITATIVE ASSESSMENT OF POSTOPERATIVE HEPATOBILIARY LESIONS BASED ON DLPE
00: -
The present disclosure relates to the technical field of biomedical engineering and artificial intelligence, and in particular, to a method and a system for quantitative assessment of postoperative hepatobiliary lesions based on a DLPE algorithm. The method includes: acquiring multimodal medical images at a plurality of time points and generating a spatially aligned four-dimensional dataset through deep learning-based registration; performing multimodal spatiotemporal feature fusion by using parallel 3D-CNNs and a cross-modal attention mechanism; inputting a fused feature sequence into a GRU network to model a dynamic evolution process of the lesion, and outputting a global evolution feature vector; and generating a voxel-level pathological evolution probability map through a three-dimensional decoder and extracting quantitative metrics such as volume, morphology, and signal intensity of each pathological state. Through the above technical solutions, the present disclosure enables precise differentiation and dynamic quantification of tumor recurrence, inflammatory edema, and scar tissue, and enhances the objectivity, accuracy, and clinical decision support capabilities of postoperative hepatobiliary efficacy assessment.

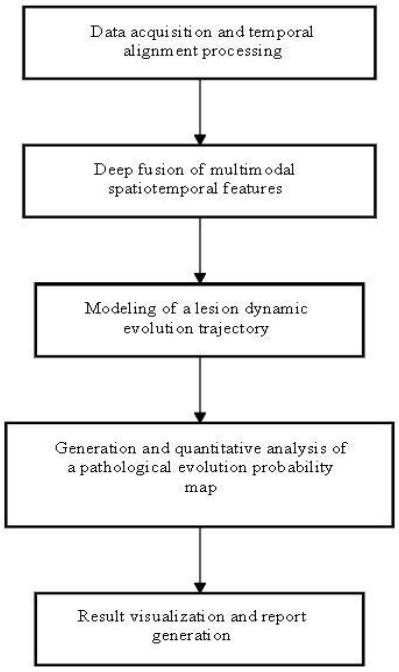

21: 2026/02461. 22: 2026/03/03. 43: 2026/10/16
51: H04W
71: NOKIA TECHNOLOGIES OY
72: DIMNIK, Riikka Karoliina, KOSKELA, Timo, DALSGAARD, Lars, KAINULAINEN, Jani-Pekka, GOYAL, Sanjay
33: US 31: 63/542,817 32: 2023-10-06
54: ENABLING SPECIAL UE MEASUREMENT BEHAVIOR
00: -
An apparatus configured to: perform candidate target cell measurements based, at least partially, on a first configuration; receive, from a network node, an indication to perform activation of at least one transmission configuration indicator state associated with at least one candidate target cell; determine a configuration for performing candidate target cell measurements in response to the indication to perform activation of the at least one transmission configuration indicator state; and use the configuration to measure a reduced set of candidate target cells indicated with the first configuration.

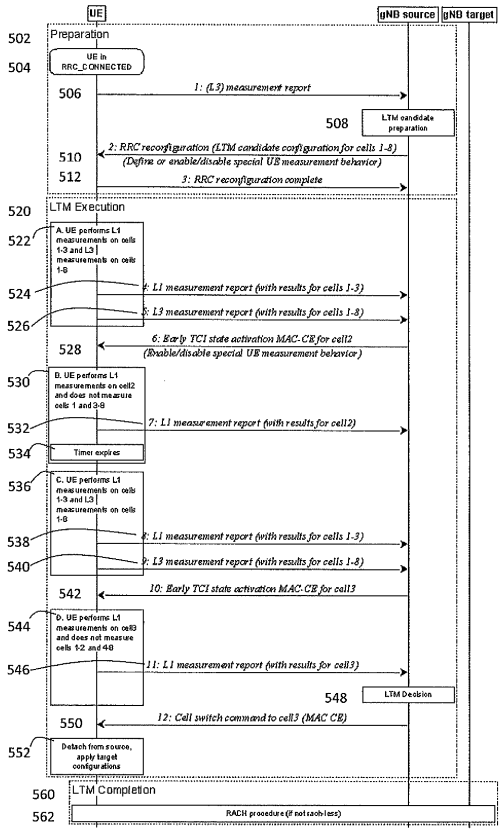

21: 2026/02473. 22: 2026/03/04. 43: 2026/10/29
51: A23L
71: Shandong Academy of Agricultural Sciences
72: WANG, Yansheng, WANG, Wenliang, GONG, Zhiqing, SONG, Shasha, ZHANG, Jian, CUI, Wenjia, JIA, Fengjuan, HOU, Furong, SHI, Junyan, JIA, Chengli

54: DRYING METHOD FOR IMPROVING FLAVOR AND QUALITY OF GARLIC SLICES

00: -

Disclosed is a drying method for improving flavor and quality of garlic slices, which significantly improves the flavor and quality of dried garlic products based on a combination of three key steps: refrigeration treatment, room temperature airflow drying, and catalytic infrared drying treatment. According to the present invention, refrigeration treatment is adopted first to inhibit the respiration of garlic; then, by utilizing the moisture content difference between the airflow and garlic slices at room temperature, moisture in the garlic slices is transferred to the airflow through osmosis and is removed by the turbulence of the airflow. Building on the slower and incomplete drying achieved in the first two steps, the present invention further introduces a catalytic infrared drying treatment step. Therefore, the garlic drying method of the present invention optimizes both the product quality and the drying speed.

21: 2026/02474. 22: 2026/03/04. 43: 2026/10/29
51: A23L
71: Shandong Academy of Agricultural Sciences
72: WANG, Wenliang, ZHANG, Jian, WANG, Yansheng, SONG, Shasha, GONG, Zhiqing, CUI, Wenjia, JIA, Fengjuan, HOU, Furong, SHI, Junyan, JIA, Chengli

54: EFFICIENT AND QUALITY-PRESERVING STERILIZATION METHOD FOR GINGER JUICE

00: -

Provided is an efficient and quality-preserving sterilization method for ginger juice. The method achieves the effect of efficient sterilization while ensuring the quality of the ginger juice by combining three non-thermal sterilization methods (i.e., ultrasonic sterilization, ultraviolet light irradiation, and low-temperature plasma treatment) to work cooperatively. The bacteria/fungi in ginger juice can be primarily killed by ultrasound and ultraviolet light. Residual stubborn bacteria/fungi can be deeply killed through the subsequent low-temperature plasma treatment, and a large number of high-activity particles (active oxygen and active nitrogen), charged particles, and a weak electric field generated by the low-temperature plasma treatment jointly destroy the cell structure of microorganisms. The more significant the sterilization efficacy can be achieved. The combined use of these three methods can greatly improve the sterilization efficacy without destroying the active ingredients in ginger juice.

21: 2026/02475. 22: 2026/03/04. 43: 2026/10/29
51: C08B
71: Shandong Academy of Agricultural Sciences
72: ZHANG, Jian, WANG, Wenliang, CUI, Wenjia, WANG, Yansheng, SONG, Shasha, GONG, Zhiqing, JIA, Fengjuan, HOU, Furong, SHI, Junyan, JIA, Chengli

54: METHOD FOR ENHANCING POLYSACCHARIDE CONTENT AND ANTIOXIDANT ACTIVITY OF EDIBLE MUSHROOM POWDER

00: -

The present invention belongs to the technical field of deep processing of agricultural products, and

provides a method for enhancing polysaccharide content and antioxidant activity of edible mushroom powder. The method combines three steps of composite enzymatic hydrolysis, ultrasonic treatment, and fermentation to achieve a synergistic effect, significantly enhancing the dissolution and release amount of polysaccharides and their antioxidant activity. In specific steps, optimization of compositions of the composite enzyme and the composite fermentation stain further improves polysaccharide content and antioxidant activity of the edible mushroom powder. The method of the present invention simultaneously ensures both polysaccharide content and quality in the edible mushroom powder.

21: 2026/02476. 22: 2026/03/04. 43: 2026/10/29
51: A61B
71: CHONGQING UNIVERSITY CANCER HOSPITAL
72: Duan huijun, Liu tingting, Lv jing, Xu luxiang, Ran xin, Wang xia, Huang qiuping

54: PRESS BAND SUITABLE FOR POST LUMBAR PUNCTURE IN HEMATOLOGY DEPARTMENT

00: -

The present invention provides a press band suitable for post lumbar puncture in hematology department, which includes a flexible belt body. A containing cavity is arranged inside the flexible belt body, a lumbar vertebra pressing bag connected to the flexible belt body is accommodated in the containing cavity, an air inlet connecting pipe extending out of a side edge of the flexible belt body is connected to an edge of the lumbar vertebra pressing bag, the air inlet connecting pipe is connected to a latex air bag through an inflation catheter, a liquid absorption layer is connected to an inner surface of the flexible belt body, a medical sterile gauze block is bonded to a position, opposite to the lumbar vertebra pressing bag, on an inner surface of the liquid absorption layer, a first connecting part is arranged at one end of the inner surface of the liquid absorption layer, a second connecting part is arranged at the other end of an outer surface of the flexible belt body, and the first connecting part and the second connecting part are detachably and fixedly connected. The press band can realize continuous and stable compression on a puncture point after a patient lies flat following lumbar puncture, saving time and labor, and meanwhile conduct disinfection and isolation protection on the puncture point and absorb sweat and other liquids on the patient's waist.

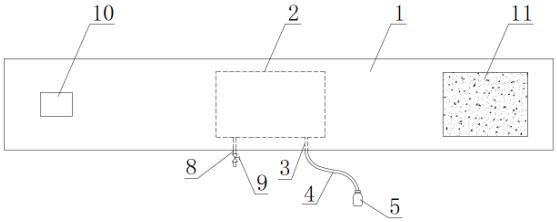

21: 2026/02477. 22: 2026/03/04. 43: 2026/10/29
51: A61F; B33Y
71: JILIN JIANZHU UNIVERSITY
72: FANG, Juan, XU, Cheng, WANG, Changpeng, REN, Xinyou, CAO, Mengshu

54: 3D PRINTING METHOD AND DEVICE BASED ON ACETABLAR BONE DEFECT MODEL

00: -

Disclosed is a 3D printing method and device based on an acetabular bone defect model, including: performing thin-layer scanning on a patient with an acetabular bone defect through CT and other equipment to obtain a precise size and shape of an acetabular bone of the patient, and completing a three-dimensional reconstruction and design through collected image data; importing relevant data of the three-dimensional reconstruction and design into a control unit of a support base, where the control unit makes a printing head move on a printing platform by controlling a movement of a gantry, the printing head and the printing platform, printing the acetabular bone layer by layer. By arranging an auxiliary assembly and a transport assembly, the invention can achieve the separation between an acetabular bone model and the printing platform after the acetabular bone model is successfully printed, avoiding damage to the acetabular bone model by the operator.

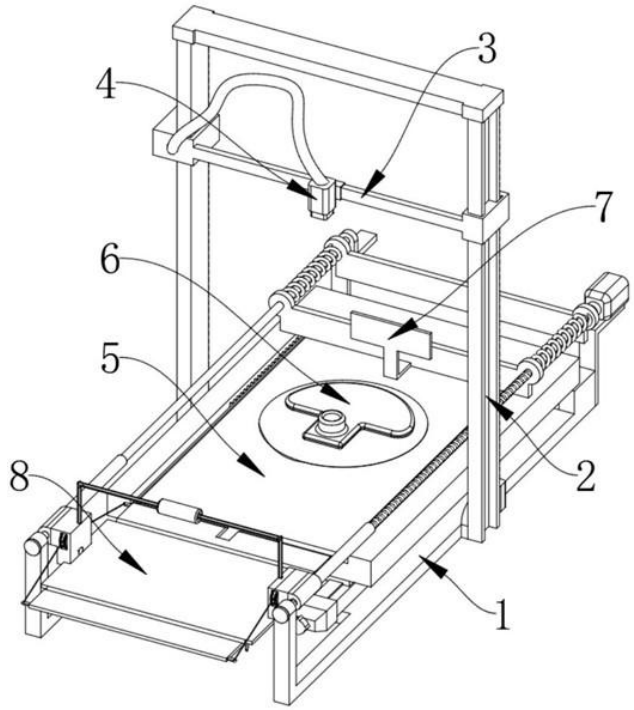

21: 2026/02479. 22: 2026/03/04. 43: 2026/10/29
51: E21D
71: CHONGQING UNIVERSITY, SICHUAN CHUANMEI SHIDONGGOU COAL INDUSTRY CO., LTD.
72: LIU, Huajun, JIANG, Yongdong, ZOU, Yong, LUO, Hongbin, YANG, Haibin, QIU, Quangang, HE, Linbo, YANG, Yongwei, ZHONG, Haotian, CHEN, Yutong, WANG, Yunhe, DONG, Taihua, YANG, Qijun, XIANG, Min, LI, Fangsheng, ZHANG, Xueliang, YUAN, Tinghao

54: BOW-SHAPED FLEXIBLE SHIELD SYSTEM AND SUPPORT FOR GOB-SIDE ENTRY RETAINING IN COAL MINES

00: -
The present invention discloses a bow-shaped flexible shield system and support for gob-side entry retaining in coal mines and belongs to the field of coal mining. The system includes a plurality of shield supports arranged sequentially along an extension direction of a roadway, with a spacing between adjacent shield supports of 0.15 m to 0.3 m. According to the present invention, the support body and the hydraulic prop are disposed in the roadway and can be retrieved and reused after the completion of the mining operation, thereby reducing mining costs.

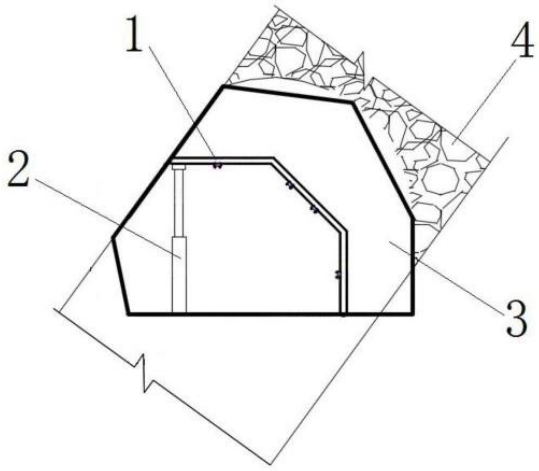

21: 2026/02480. 22: 2026/03/04. 43: 2026/10/29
51: G06F
71: SONG HAIYAN
72: SONG, Haiyan

54: COMMUNICATION SERVICE SYSTEM AND COMMUNICATION SERVICE PROCESSING METHOD

00: -
The present disclosure discloses a communication service system and a communication service processing method. The system includes: a first determining module, configured to determine service applicability based on service subscription data of all users; a second determining module, configured to determine a service demand degree based on service usage data of a target user; a third determining module, configured to determine a service interest degree based on subscription process data of the target user; and a recommendation module, configured to: integrate the foregoing three dimensions, and provide the user with accurate communication service recommendations by training and optimizing a recommendation model. Service applicability, a user demand degree, and a user interest degree for services are comprehensively considered in the present disclosure, thereby achieving personalized recommendation of communication services and improving recommendation accuracy and user satisfaction.

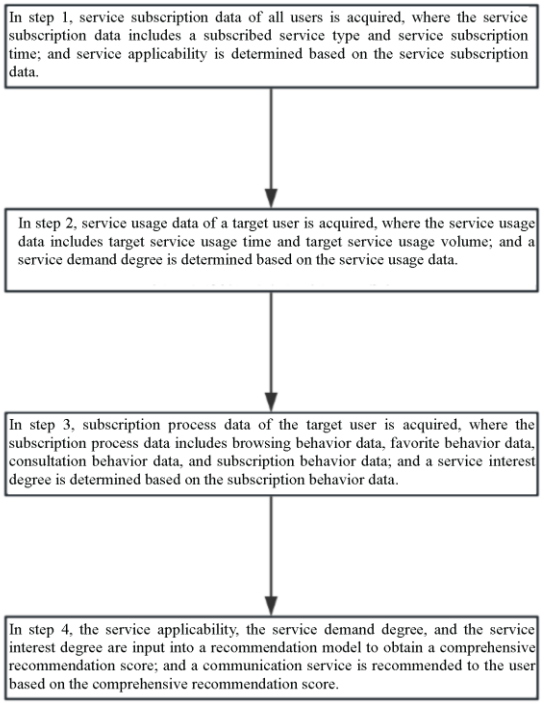

21: 2026/02481. 22: 2026/03/04. 43: 2026/10/29
51: F25B
71: QINGDAO BANKE FREQUENCY CONVERSION TECHNOLOGY CO., LTD.
72: LI, Guangming, GUAN, Yanbin, LIU, Xuxian
33: CN 31: 2026100557605 32: 2026-01-16
54: AI-BASED CONTROL METHOD FOR VARIABLE-FREQUENCY HEAT PUMPS AND CONTROL SYSTEM USING THE SAME
00: -
The disclosure provides an AI-based variable-frequency heat pump control method and system, including steps: S1: Data collection; S2: Data preprocessing. Using an AI model, it realizes heat demand load forecasting and dynamic optimization of operating parameters, enhancing response speed to ambient temperature and heat demand changes, improving parameter matching accuracy, and solving response lag and poor adaptability of traditional methods. A reinforcement learning algorithm reduces energy consumption under complex conditions, improving adaptive energy-saving capability. A CNN-Transformer fusion model enhances fault diagnosis accuracy and reduces false alarms, overcoming traditional threshold-based drawbacks. It also has model self-learning and online parameter updating to adapt to long-term operating condition changes and equipment aging.

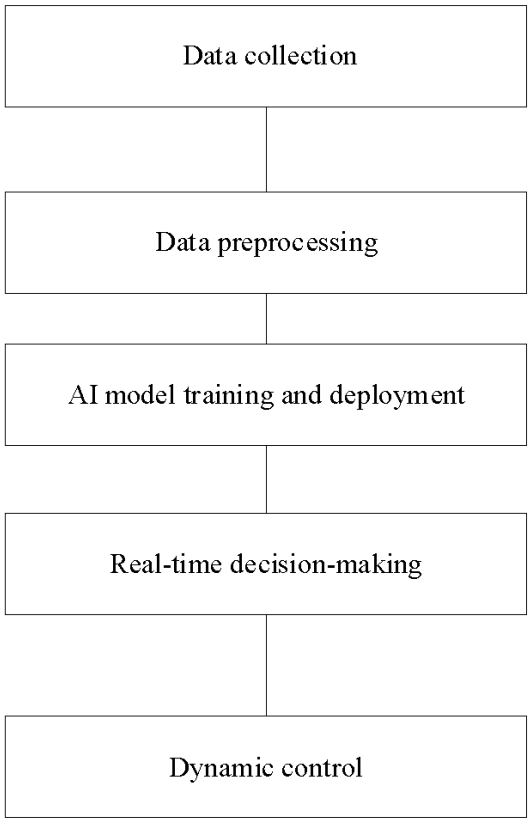

21: 2026/02485. 22: 2026/03/04. 43: 2026/10/29
51: A61F
71: SICHUAN CANCER HOSPITAL
72: LIANG, Ying, YI, Long
54: BREAST CARE DEVICE POST-BREAST TUMOR SURGERY
00: -
The present invention discloses a breast care device post-breast tumor surgery, relating to the field of breast care technology, comprising a positioning frame and a care cover. The top and bottom of the front of the positioning frame are fixedly connected to a positioning box. In the present invention, by setting the care cover, stable and fixed care can be provided for the patient's breasts. By setting the positioning band, the first Velcro hair surface, and the first Velcro hook surface, it is easy to install and fix the care cover, as well as to disassemble and change the dressing. By setting the sliding rod, sliding sleeve, and connecting plate, it is easy to adjust the distance between the two care covers, so that it can perfectly fit the patient's breasts and improve comfort.

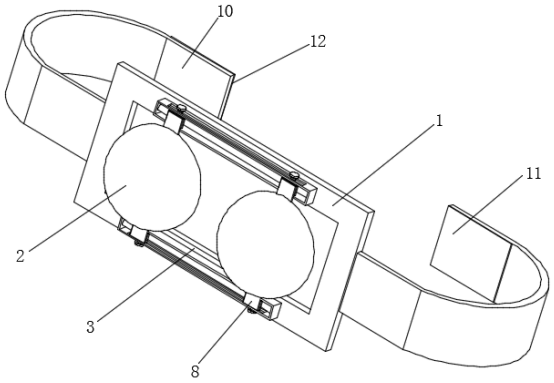

21: 2026/02486. 22: 2026/03/04. 43: 2026/10/29
51: A61M
71: SICHUAN CANCER HOSPITAL
72: YI Long, LIANG Ying
54: ADJUSTABLE ANGLE INFUSION STAND FIXATION DEVICE FOR ONCOLOGY DEPARTMENT
00: -
The present invention relates to the field of medical device technology and discloses an adjustable angle infusion stand fixation device for oncology department, comprising a base and a frame rod. The two sides of the inner cavity of the frame rod are slidably connected with adjustment rods. The present invention achieves smooth sliding and reliable multi gear locking of the adjustment rod through the adjustment rod, sliding groove, and sliding block set in the infusion stand, as well as the limit component composed of limit box, card block, spring, and card slot; Through the installation components fixed at the bottom of the infusion stand, specifically the concave frame, threaded sleeve, threaded rod, installation plate, and handle, and cooperating with the fixed block installed on the base, the infusion stand can be disassembled and fixed.

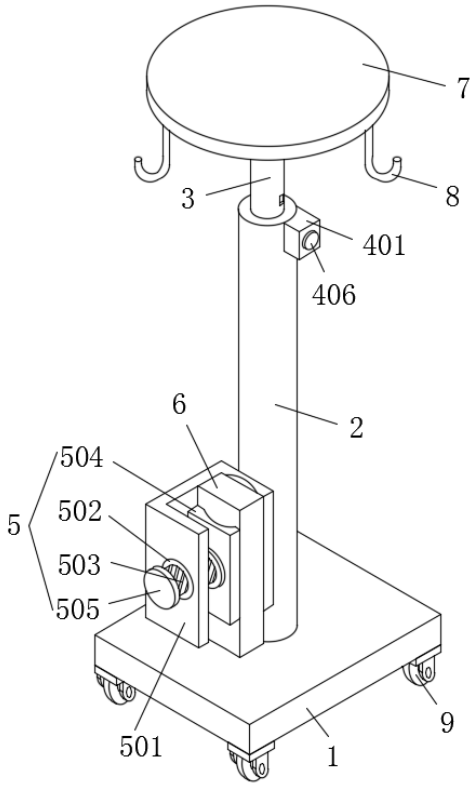

21: 2026/02487. 22: 2026/03/04. 43: 2026/10/29
51: G01N
71: BEIJING UNIVERSITY OF TECHNOLOGY, SHAANXI ACADEMY OF ARCHITECTURAL SCIENCES CO., LTD.
72: ZHOU, Chunjuan, DU, Xiuli, WU, Jinzhi, LIU, Mingliang, MIAO, Pengyong, GUO, Penggang, WU, Yanru, LI, Teng, HUANG, Sicong, LI, Jinru
33: CN 31: 2026100546390 32: 2026-01-15
54: CABLE MEMBRANE STRUCTURE TESTING DEVICE
00: -
The device comprises a rectangular device body with an open side wall and an arc-shaped groove arranged on the open side. A rectangular frame is arranged at the opening of the device body, and connecting columns are arranged on both sides of the rectangular frame near the lower portion of the opening. An adsorption component is arranged on the rectangular frame and comprises an adsorption tube provided with multiple adsorption holes and connected to a negative pressure component. Two flipping components are arranged on opposite sides of the device body and are connected to the rectangular frame to facilitate opening and closing

operations. A clamping component is arranged at the top of the device body to secure membrane materials during testing. The device enables rapid installation and fixation of membrane materials, improves operational convenience, and enhances automation efficiency during cable membrane structure testing procedures.

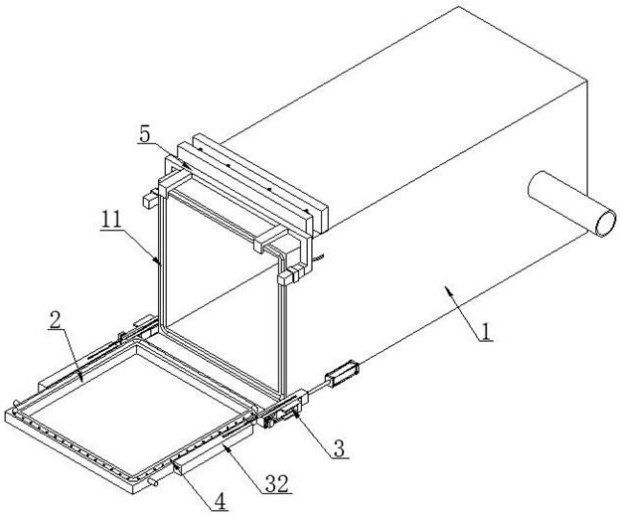

21: 2026/02488. 22: 2026/03/04. 43: 2026/10/29
51: A61K
71: ZHAO Wujin
72: ZHAO Wujin
54: HUJUN ZHENFAN DECOCTION AND USES THEREOF
00: -
The present invention discloses a Hujun Zhenfan Decoction and uses thereof, relating to the technical field of traditional Chinese medicinal preparation. The Hujun Zhenfan Decoction is composed of Astragalus membranaceus, Codonopsis pilosula, Angelica sinensis, Paeonia lactiflora, Hedyotis diffusa, Scutellaria barbata, Taraxacum mongolicum, Paris polyphylla, Curcuma zedoaria, Sparganium stoloniferum, Smilax glabra, Polygala tenuifolia, Poria cum Radix Pini, Curcuma aromatica and Acorus tatarinowii, combined in specific parts by weight. The invention is formulated on the basis of the traditional Chinese medical theory of "protecting and clarifying the sovereign, and harmonising both pacification and elimination", whereby the decoction as a whole exerts the functions of tonifying qi and nourishing blood, clearing heat and detoxifying, promoting blood circulation and removing stasis, and calming the mind while opening the orifices. Experimental results have demonstrated that the compound formula can effectively inhibit the growth of lung cancer, ameliorate chemotherapy-induced immunosuppression, reduce toxic side effects, and that the combination of medicinal ingredients within the formula exhibits synergistic and potentiating effects. The invention may be used in the preparation of medicaments for adjunctive treatment of lung cancer and for promoting post-chemotherapy recovery, offering the advantages of definite therapeutic efficacy and high safety.

21: 2026/02490. 22: 2026/03/04. 43: 2026/11/10
51: A61K; C07K; C12N; G01N
71: MINGHUI PHARMACEUTICAL (HANGZHOU) LIMITED, MINGHUI PHARMACEUTICAL (SHANGHAI) LIMITED
72: LIU, Bo, ZHU, Liyuan, CAO, Guoqing, SHI, Junwei, CAO, Yuting, WENG, Xialian
33: CN 31: 202311018785.0 32: 2023-08-14
54: ANTI-C-MET NANOBODY AND USE THEREOF
00: -
A nanobody specifically binding to c-MET or an antigen-binding fragment thereof, a composition containing the nanobody or the antigen-binding fragment thereof, and a nucleic acid molecule encoding the nanobody or the antigen-binding fragment thereof. Also provided is a use of the nanobody or the antigen-binding fragment thereof in the treatment and diagnosis of diseases.

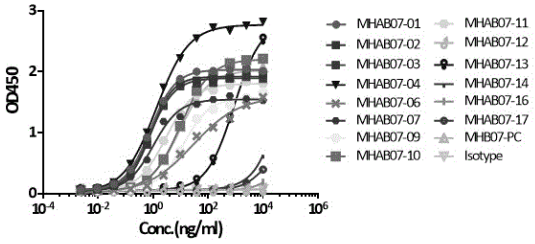

21: 2026/02530. 22: 2026/03/05. 43: 2026/10/16
51: A01G
71: Shanxi Academy of Forestry and Grassland Sciences
72: Wu Xiujuan, Ao Xiaoping, Yao Limin, Liu Xin
54: A FOREST SEEDLING ROOT CUTTING MACHINE
00: -
The present invention pertains to the field of seedling root cutting tools, and specifically relates to

a forest seedling root cutting machine, comprising a vehicle frame and a root cutting blade frame. Support legs of the vehicle frame are mounted with wheels. The root cutting blade frame is installed on the vehicle frame, and a rotating shaft at the bottom of the root cutting blade frame is mounted with a cutting blade. The root cutting blade frame can drive the cutting blade to move up and down, bringing the cutting blade close to the ground or lifting it. A torque output mechanism on the root cutting blade frame is used to drive the cutting blade to rotate, enabling the cutting blade to cut into the soil from one side of the forest seedling and emerge from the other side, completing one root cutting operation for the forest seedling. The forest seedling root cutting machine provided by the present invention can complete the root cutting operation for multiple rows of forest seedlings at one time, exponentially improving work efficiency. Operating this forest seedling root cutting machine requires only controlling a single handle to move the vehicle frame, lift the root cutting blade frame, and start/stop the torque output mechanism of the cutting blade, making it simple to use and low in labor intensity during operation. The entire forest seedling root cutting machine has no complex structures and is simple to manufacture.

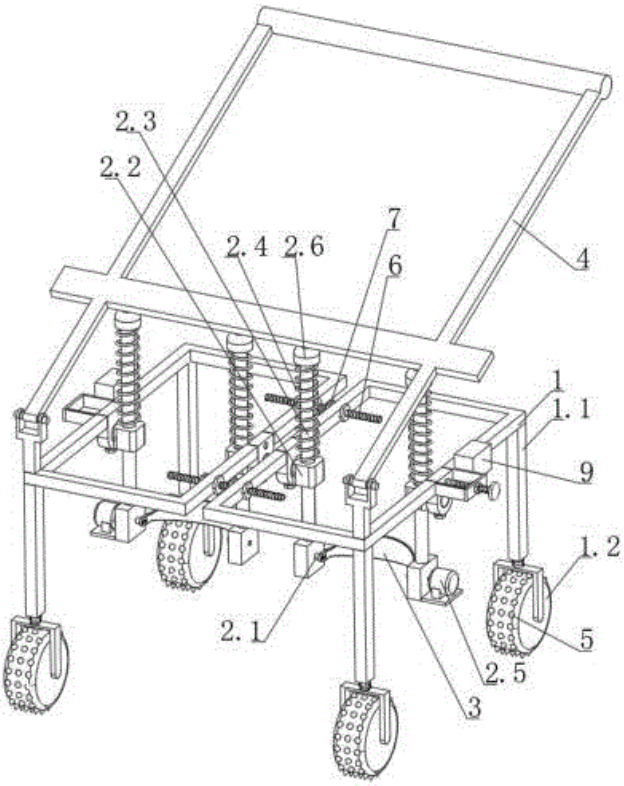

21: 2026/02534. 22: 2026/03/05. 43: 2026/10/16
51: C21D
71: Kunming University of Science and Technology
72: Biju Zheng, Xiangming Li, Dehong Lu, Zhenhua Li, Mojin Zhou
33: CN 31: 202512053589.2 32: 2025-12-31

54: A HEAT TREATMENT METHOD FOR A HIGH-STRENGTH AND HIGH-TOUGHNESS DUCTILE IRON CRANKSHAFT

00: -

The present invention relates to the technical field of heat treatment of ductile iron, and particularly to a heat treatment method for a high-strength and high-toughness ductile iron crankshaft, comprising: heating an as-cast ductile iron crankshaft to the ferrite–austenite two-phase region for incomplete austenitization, so as to form proeutectoid ferrite and incompletely transformed austenite; subsequently rapidly transferring the crankshaft into an isothermal medium at 280 °C-400 °C for isothermal quenching, such that the austenite is transformed into ausferrite composed of bainitic ferrite and high-carbon austenite. Through regulation by this process, a dual-phase microstructure with proeutectoid ferrite and ausferrite as the matrix is obtained. This method effectively overcomes the problem of low elongation in conventional austempered ductile iron, and the

prepared crankshaft exhibits a tensile strength of not less than 900 MPa and an elongation of not less than 10%, with a maximum of up to 18%, thereby achieving an excellent combination of high strength and high toughness.

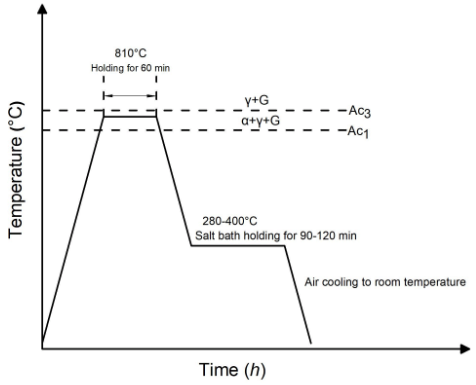

21: 2026/02535. 22: 2026/03/05. 43: 2026/10/16
51: A01C
71: Yancheng Teachers University
72: Guoliang Xiao, Yidan Kang, Xiaofeng An, Wucun Meng, Runping Zhang, Tianxiang Ren
54: A WATER-SAVING IRRIGATION SYSTEM FOR THE CULTIVATION OF FARMLAND CROPS
00: -
The present invention discloses a water-saving irrigation system for the cultivation of farmland crops, which primarily includes a rainwater collection device, a water storage device, and a pulse drip irrigation device. The water storage device is designed with a rectangular structure, with a ridge-shaped roof on top. One side of the roof is covered with solar panels to provide power for all electrical components of the system, while the other side is equipped with a rainwater collection board. Rainwater flows through a convergence channel and falls into the water storage tank. The upper sidewall of the water storage tank is provided with a water replenishment inlet to refill with well water or canal water as external water sources. Water level electrodes inside the storage tank control the opening and closing of the inlet valve based on the water level. Excess water is discharged through the overflow outlet. The bottom of the tank is sloped, with a sidewall drain for sludge removal, and the top sidewall is equipped with a water outlet. The water outlet is connected to the pulse drip irrigation device via a water distribution pipe. The pulse drip irrigation device uses underground irrigation, with a humidity sensor monitoring soil moisture in real time. This is linked with a pulse control valve to intermittently supply water to the soil via a capillary drip emitter.This invention is highly integrated and easy to operate, addressing the issue of traditional irrigation systems' heavy reliance on manual water sources and low rainwater resource utilization. It is particularly suitable for crop irrigation in farmland without electrical grid access.

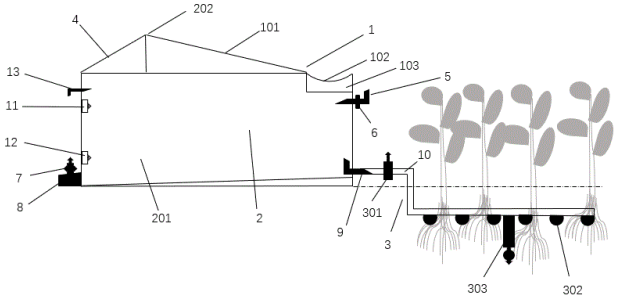

21: 2026/02544. 22: 2026/03/05. 43: 2026/10/16
51: G06F; H04L
71: VODAFONE GROUP SERVICES LIMITED
72: LYNCH, Pete, ARMSTRONG, Helen, BAYLISS, Ed
33: GB 31: 2312681.6 32: 2023-08-18
54: METHOD FOR SECURELY ASSESSING A DEVICE CONFIGURATION
00: -
A method for securely assessing device configuration is provided. Configuration data of a device is compared with a set of security configuration requirements. The set of security configuration requirements is retrieved based on the configuration data. Based on the comparison, it is determined whether the set of security configuration requirements is met. In response to the determination, a pass or fail result is generated and sent, via a communication channel and to an external device, without any reason for the pass or fail result.

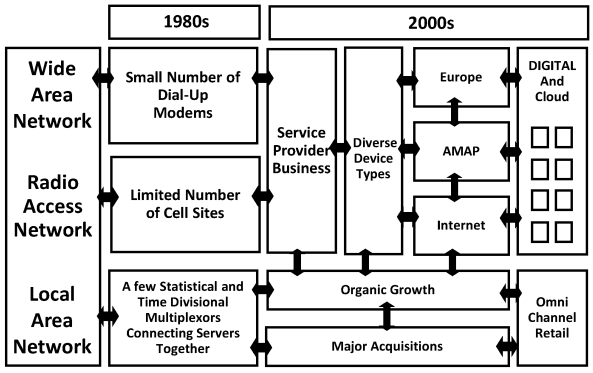

21: 2026/02545. 22: 2026/03/05. 43: 2026/10/16
51: G06F; H04L; H04W
71: VODAFONE GROUP SERVICES LIMITED
72: LYNCH, Pete, ARMSTRONG, Helen, BAYLISS, Ed
33: GB 31: 2312688.1 32: 2023-08-18
54: METHOD FOR SECURELY ASSESSING A DEVICE CONFIGURATION
00: -
Method for Securely Assessing a Device Configuration A method for securely assessing device configuration is provided. Configuration data of a device is compared with a set of security configuration requirements. The set of security configuration requirements is retrieved based on the configuration data. Based on the comparison, it is determined whether the set of security configuration requirements is met. In response to the determination, a result is generated and sent. A validation check is performed for the result and, if the result fails the validation check, the result is prevented from being sent.

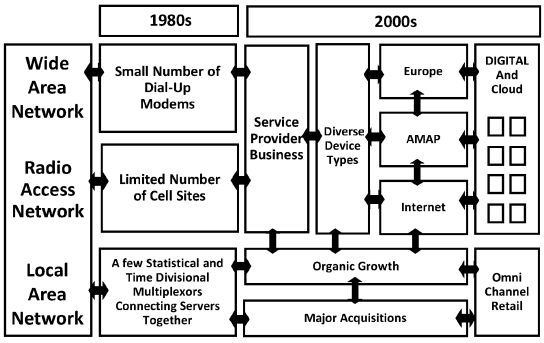

21: 2026/02546. 22: 2026/03/05. 43: 2026/10/16
51: B02C
71: METSO FINLAND OY
72: JUUTINEN, Tuomas, YLÄNNE, Sakari, KOSKINEN, Karri, RAJALA, Jouni T.
33: FI 31: 20236071 32: 2023-09-28
54: CRUSHER FEED CHUTE COVER
00: -
Crusher feed chute cover, comprising a first part (10) and a second part (20) attached to each other with a hinged connection and together forming a wall (10b,20b) around and a roof (10a,20a) on top of a crusher (100) feed chute; wherein the first part (10) is pivotable around a pivot point (30) into a first, a second and a third position; further comprising a biasing element (40) configured to provide a force assisting in pivoting the first part (10) from the first or third position to the second position; and to provide a force slowing down the pivoting of the first part (10) from the second position to the first or third position.

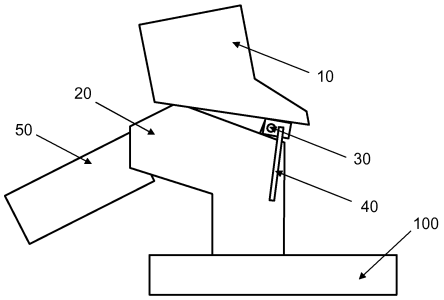

21: 2026/02551. 22: 2026/03/05. 43: 2026/10/26
51: H04Q
71: FRAMATOME
72: SALMON, Olivier
54: SYSTEM PROVIDING AN AUTOMATIC PATCH OF ELECTRICAL SIGNALS BETWEEN TWO DIFFERENT DEVICES AND ASSOCIATED METHOD
00: -
The invention concerns a system (10), providing a patch of electrical signals between at least two different devices (12, 14) presenting a different number of connecting points, and comprising: - a connecting panel (161) presenting connecting points of one (12) of these device, - a PCB configuration card (18) configured to route some of the connecting points to a free face comprising at least one board to board connector with a predetermined input/output connection pattern; - a flex PCB comprising two identical ends (20) connected by a flexible PCB link (22), each end presenting at least one flex PCB board to board connector configured to be plugged,

according to said predetermined input/output connection pattern, one end being connected to the board to board connector, the other end being connected to the other device (14).

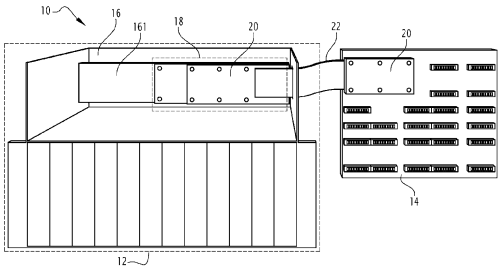

21: 2026/02573. 22: 2026/03/06. 43: 2026/10/19
51: A23L
71: Anhui Science and Technology University
72: LI Peiyan, WANG Zihao, JI Weifan, LIU Zhen, WU Xiaowei

54: COATING FOR OPTIMIZING QUALITY OF FRIED FRENCH FRIES, PREPARATION METHOD AND APPLICATION THEREOF

00: -

The present invention discloses a coating for optimizing quality of fried French fries, along with its preparation method and application, belonging to the field of food processing technology. The coating comprises the following ingredients: 11.58-34.74 parts of high-amylose corn starch, 23.16-46.32 parts of corn starch, 38.6 parts of low-gluten flour, and 3.5 parts of auxiliary materials. The present invention achieves significant improvement in quality of fried French fries by optimizing starch components in the coating formula. The coating effectively reduces infiltration of oil into the French fries during the deep-frying process, significantly lowers the fat content of the final product, while simultaneously inhibiting excessive moisture loss and maintaining a moist and soft interior of the French fries. The formula and process provided by the present invention are simple and cost-controllable, offering an effective technical solution for developing low-fat, high-quality fried French fries.

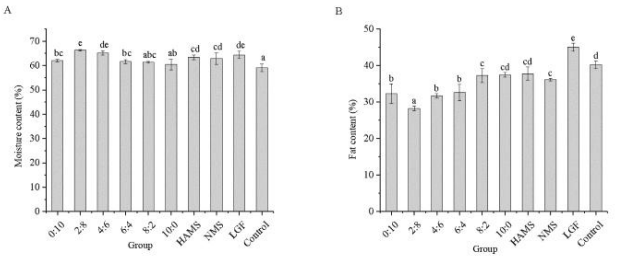

21: 2026/02575. 22: 2026/03/06. 43: 2026/10/19
51: A61H
71: Huizhou Sixth People's Hospital
72: Xiaoqiao Lin, Daoer Liu, Lihong Luo, Guifeng Li

54: PORTABLE ACUPUNCTURE NEEDLE BOX FOR ACUPUNCTURE

00: -

A portable acupuncture needle box for acupuncture, relating to the technical field of acupuncture medical instruments. The portable acupuncture needle box comprises a cylindrical box body, the box body being divided into an upper storage compartment and a lower fixing compartment, a top of the upper storage compartment is provided with a one-way downward-opening and automatically resetting needle access cover, a bottom of the lower fixing compartment is provided with a magnetic material layer and an openable and closable movable bottom plate, a side of the box body is provided with a switch, and a linkage mechanism is provided between the switch and the movable bottom plate; when the needle access cover is pressed, it opens downward for needle disposal, and automatically closes after the pressure is removed, the needles falling into the lower fixing compartment and being adsorbed and fixed by the magnetic material layer, pressing the switch controls the opening of the movable bottom plate via the linkage mechanism, and the needles are discharged centrally by gravity. The structure of the invention is compact and portable, enabling contactless safe disposal and centralized needle discharge, avoiding needlestick injuries throughout the entire process, dual protection prevents needles from falling out or spilling, making it suitable for mobile medical services in multiple scenarios, and enhancing the safety and convenience of acupuncture operations.

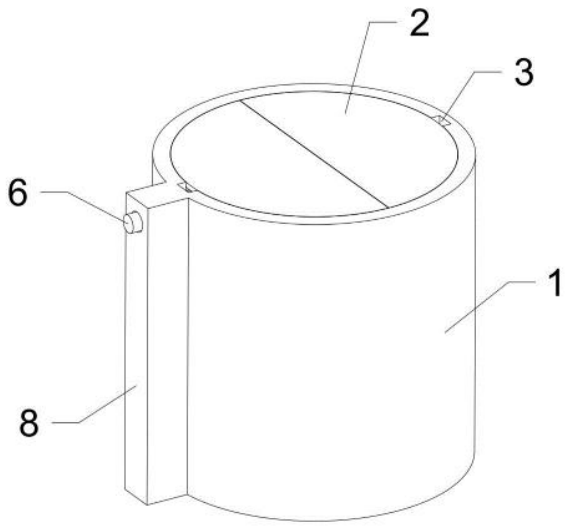

21: 2026/02576. 22: 2026/03/06. 43: 2026/10/19
51: A61M
71: Huizhou Sixth People's Hospital
72: Xiaorong Zeng, Daixiong Lian, Shanshan Liu
54: HAND WASHING DEVICE FOR NURSING IN INFECTIOUS DISEASE DEPARTMENTS
00: -

The invention provides a hand washing device for nursing in infectious disease departments, relating to the technical field of medical nursing cleaning. It comprises a box body, with a hand insertion frame and an openable and closable cover plate provided on the top of the box body, a sealing element provided on the inner side of the cover plate, forming an enclosed space when closed, a partition plate provided inside the box body dividing the interior into a hand cleaning area and a cleaning area, water-permeable holes provided on the partition plate, a disinfectant liquid outlet pipe and a cleaning water outlet pipe provided on the top of the box body, a stirring and cleaning mechanism composed of an electric motor, a rotating shaft, and a stirring impeller, and a drainage structure provided at the bottom of the box body. This device adopts a closed cleaning design, effectively preventing the splashing of bacteria-carrying water, reducing the risk of cross-infection, achieving contactless liquid dispensing to avoid secondary contamination, and having a device self-cleaning function without the need for manual cleaning. The layered structure ensures operational safety, and the drainage is smooth and not prone to clogging, highly suitable for the high protection and high cleanliness requirements of infectious disease departments.

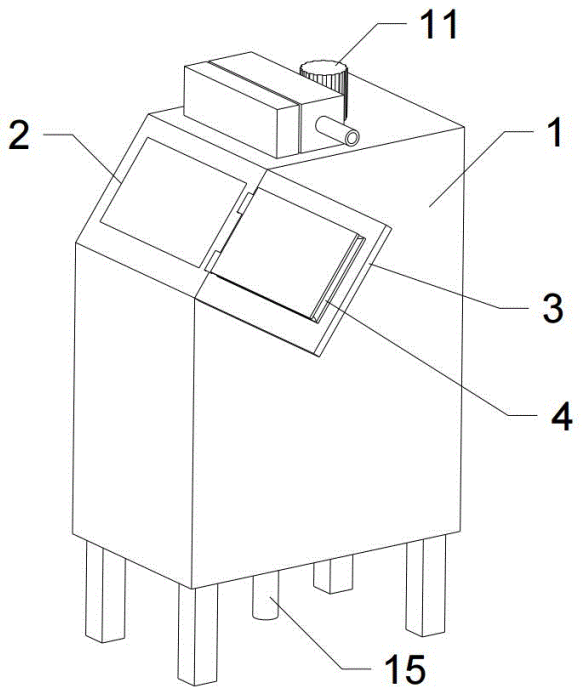

21: 2026/02577. 22: 2026/03/06. 43: 2026/10/19
51: H02B
71: Langshi New Material Technology (Chongqing) Co., Ltd., Chongqing Tianmeng Lidi Technology Co., Ltd.
72: Kai CEN, Xuelei ZHANG, Hongyun YANG
33: CN 31: 2026202070276 32: 2026-02-11
54: DUST-PROOF CABINET WITH ENERGY-SAVING DEVICE
00: -

The invention belongs to the technical field of electrical equipment, and discloses a dust-proof cabinet with an energy-saving device. In this solution, the ventilation fan is used to continuously provide clean airflow, and the airflow is guided to the nozzle through the air supply pipeline. The airflow ejected downward by the nozzle forms a continuous vertical air curtain at the door frame of the dust-proof cabinet, thereby preventing dust from entering the dust-proof cabinet with air and contacting the energy-saving device. The invention solves the problem of preventing dust from entering the dust-proof cabinet when the cabinet door of the dust-proof cabinet is open.

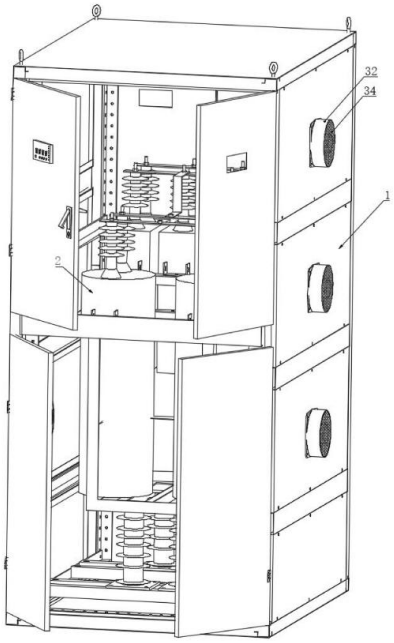

21: 2026/02579. 22: 2026/03/06. 43: 2026/10/19
51: H02J
71: Langshi New Material Technology (Chongqing) Co., Ltd., Chongqing Tianmeng Lidi Technology Co., Ltd.
72: Kai CEN, Xuelei ZHANG, Hongyun YANG
33: CN 31: 2026102525670 32: 2026-03-03
54: AN ENERGY-SAVING DEVICE AND A PRODUCTION METHOD THEREOF
00: -
The present invention belongs to the technical field of power equipment, and discloses an energy-saving device and a production method thereof. In the present solution, the driving assembly controls the adjacent clamping devices to clamp alternately, so that the contact positions between the outer wall of the energy-saving device and the clamping pieces are switched periodically. On the premise of not affecting the fixation of the energy-saving device, uniform heat dissipation of the energy-saving device is realized. The present invention solves the problem of non-uniform heat dissipation on the outer wall of the energy-saving device.

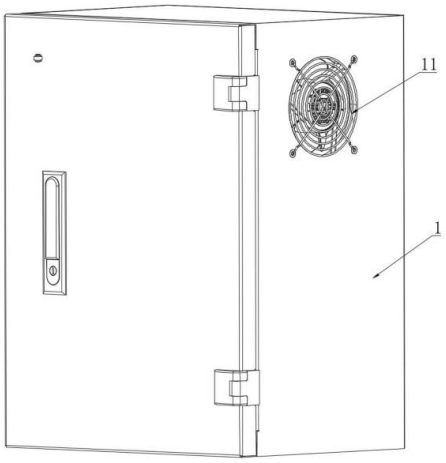

21: 2026/02583. 22: 2026/03/06. 43: 2026/10/20
51: A47K; A61G
71: HEFEI UNIVERSITY OF TECHNOLOGY
72: ZHEN, Shengchao, XU, Linmiao, SUN, Hao, LIU, Xiaoli, LIU, Xumeng, ZENG, Yuxin
33: CN 31: 202511581765.3 32: 2025-10-31
54: DEFORMABLE INTELLIGENT ELDERLY-CARE WHEELCHAIR ROBOT
00: -
Provided is a deformable intelligent elderly-care wheelchair robot, relating to the technical field of medical devices and rehabilitation engineering. A lower end of a base is provided with base wheels. A human body supporting frame is movably mounted on the base, and two ends of a base adjustment module are connected to the base and a back surface of the human body supporting frame, respectively. The base adjustment module is capable of driving the human body supporting frame to rotate with respect to the base under the control of a control module. A seat back cushion is mounted on the human body supporting frame, and the seat back cushion is configured to contact and support a head and a body of a user. A leg supporting frame adjustment module is mounted on the back surface of the human body supporting frame, and the leg supporting frame is capable of driving legs of the human body supporting frame to rotate with respect to a main body of the human body supporting frame under the control of the control module. A power module is configured to provide electric energy. The deformable intelligent elderly-care wheelchair robot not only facilitates movement of people with mobility difficulties, but also has functions of sitting, standing,

and lying, thereby achieving functional diversity of the wheelchair

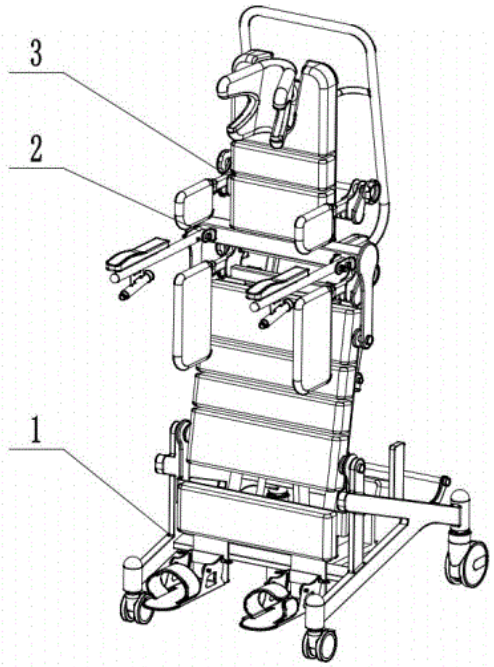

21: 2026/02626. 22: 2026/03/06. 43: 2026/10/19
51: G08G
71: VISHWAKARMA INSTITUTE OF TECHNOLOGY
72: SHARMA, Nakul, KALLAWAR, Prapti, WALKE, Harsh, WAGHMODE, Mayur, GOVINDPURKAR, Shambhavi, SAKHARE, Vedant

54: AN IOT-ENABLED MULTI-SENSOR SYSTEM FOR FOG AND OBSTACLE DETECTION ON HIGHWAYS

00: -

The present invention is related to an IoT-enabled multi-sensor system for fog and obstacle detection on highways. The invention associates with safety on highways and expressways through fog detection and data tracking of the roadways. This invention uses multiple sensors like DHT22, PIR, IR, Ultrasonic for multiple parameter detection and analysis. The data being collected is analyzed and displayed on the dashboard. Through the analysis, alerts are generated and sent to the user using devices like LEDs and LCD for visual impact and buzzer for audio alerts. The system offers a cost-effective and scalable solution for safety on the fog-prone highways.

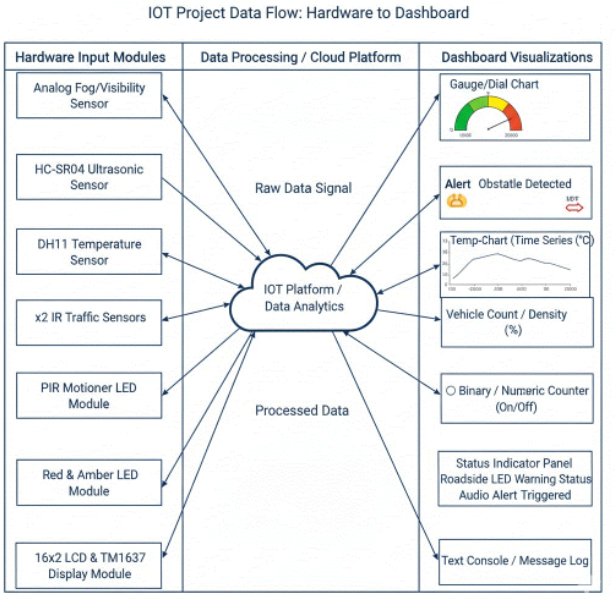

21: 2026/02627. 22: 2026/03/06. 43: 2026/10/19
51: C10L
71: MANGALAYATAN UNIVERSITY, ALIGARH, Dr. Shweta, Tanisha Goyal, Dr. Sakshi Saxena, Dr. Dinesh Kumar Sharma, Dr. Ravi Kant
72: Dr. Shweta, Tanisha Goyal, Dr. Sakshi Saxena, Dr. Dinesh Kumar Sharma, Dr. Ravi Kant

54: SUSTAINABLE AVIATION FUEL COMPOSITION COMPATIBLE WITH CONVENTIONAL AVIATION TURBINE FUEL

00: -

The present invention relates to a sustainable aviation fuel composition compatible with conventional aviation turbine fuel. The composition comprises a bio-derived aviation fuel fraction produced from one or more vegetable oils through chemical conversion followed by catalytic hydro-treatment and isomerization to yield kerosene-range hydrocarbons. The composition optionally includes a performance-enhancing package comprising an aviation-compatible additive package and/or a nanoparticle-based enhancer selected from ZnO, TiO2, SiO2, carbon nanotubes, graphene, or graphene oxide. Nanoparticles may be dispersed using ultrasonication, high-shear mixing, and/or fuel-compatible dispersants to resist settling during storage. In one embodiment, the composition is formulated as a drop-in blend with petroleum-derived aviation turbine fuel across a wide blending range while maintaining miscibility and suitability for aviation gas turbine engines. The composition is

configured to provide improved performance and sustainability compared to fossil-derived aviation fuels.

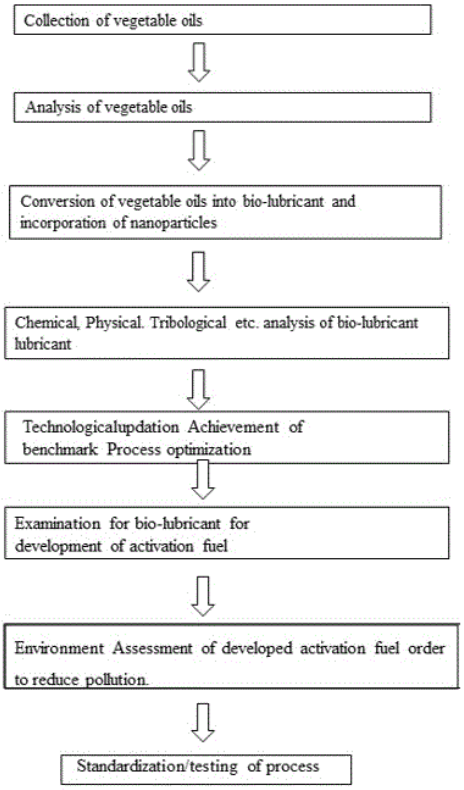

21: 2026/02628. 22: 2026/03/06. 43: 2026/10/19
51: G05B
71: MANGALAYATAN UNIVERSITY, ALIGARH, Mohd. Zuned, Sachin Kumar, Nitin Gautam, Gunjan Sharma, Umesh Chandra Sharma, Amit Kumar Upadhyay, Love Kumar, Vinay Singh, Sharmistha Roy, Nagma Khatoon
72: Mohd. Zuned, Sachin Kumar, Nitin Gautam, Gunjan Sharma, Umesh Chandra Sharma, Amit Kumar Upadhyay, Love Kumar, Vinay Singh, Sharmistha Roy, Nagma Khatoon

54: SECURE BLUETOOTH-ENABLED SMART HOME CONTROL SYSTEM WITH MOBILE APPLICATION PAIRING AND DEVICE MANAGEMENT

00: -

The present invention relates to a smart home automation system (100) for wireless operation of household electrical appliances through a Bluetooth-enabled mobile application (4). The system (100) includes a microcontroller unit (1), a Bluetooth communication module (2), one or more relay modules (3), a power supply unit (5), and an optional voice command interface (7). The mobile application (4) exchanges control signals with the microcontroller (1) via the Bluetooth module (2) to selectively energize or de-energize the relay modules (3), thereby turning connected appliances ON or OFF. For user safety and durability, the system (100) is provided within a protective housing (8) and may further incorporate opto-isolators (6) to enable safe switching of high-voltage loads. The system (100) is simple to install, cost-effective, and scalable, and provides convenient appliance automation without reliance on internet connectivity, making it suitable for contemporary home environments. The invention also supports future upgrades for IoT connectivity and AI-based automation.

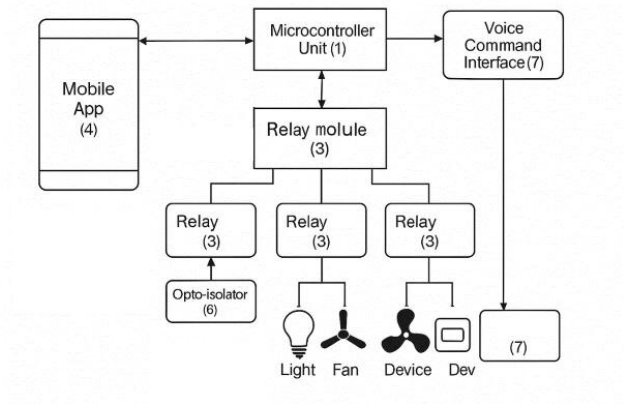

21: 2026/02629. 22: 2026/03/06. 43: 2026/10/19
51: G06Q
71: VISHWAKARMA INSTITUTE OF TECHNOLOGY
72: MORE, Pranav, MAHAJAN, Arnav, DHAGE, Mayank, SHARMA, Nakul, DEDGAONKAR, Suruchi, SHELKE, Priya

54: A MACHINE LEARNING BASED REAL-TIME BIODEGRADABLE WASTE CLASSIFICATION SYSTEM

00: -

The present invention is related to a machine learning based real-time biodegradable waste classification system. The invention is a real-time biodegradable waste classification system that incorporates MobileNet V2 deep learning architecture in combination with OpenCV and TensorFlow. The system classifies the captured image of waste into biodegradable and non-biodegradable classes and provides on-screen feedback in real-time. The invention improves

accurate waste sorting and facilitates sustainability and can be implemented in any waste management system and IoT based smart systems.

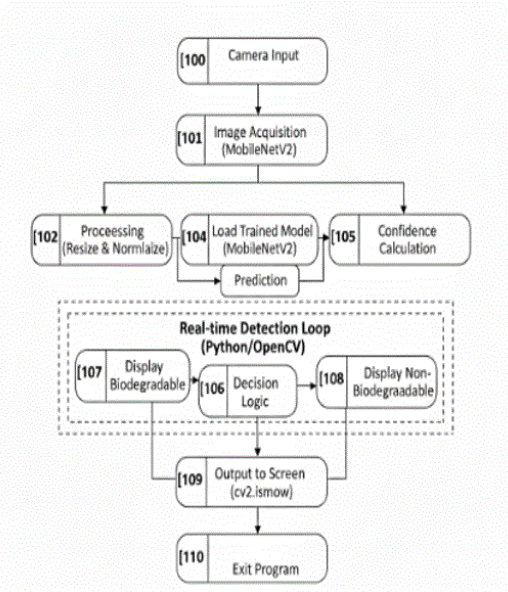

21: 2026/02630. 22: 2026/03/06. 43: 2026/10/19
51: B60W
71: VISHWAKARMA INSTITUTE OF TECHNOLOGY
72: SOUNDARRAJAN, Srinidhi, SHEDGE, Prachi, YEMUL, Arya, PATEL, Akash, SABLE, Nilesh, YENKIKAR, Anuradha, PANDIT, Pranjal, SHINDE, Gitanjali

54: A LOW-POWER NIGHTTIME PEDESTRIAN DETECTION AND INTENTION PREDICTION SYSTEM FOR AUTONOMOUS VEHICLES

00: -

The present invention is related to a low-power nighttime pedestrian detection and intention prediction system for autonomous vehicles. The invention describes a cost-effective, on-device approach for pedestrian detection and real-time intention prediction in low-light and adverse visibility scenarios, for the use of assisted or autonomous driving. The approach uses a RGB camera with passive near infrared (NIR) illumination and, in addition, it includes an AI-optimized exposure and gain control module to improve image quality in poor-lighting, while limiting the computational load. A unique temporal noise reduction approach that is specific to the bounding-box is applied selectively to the regions of interest that are detected in the camera streams, improving efficiency and recall, while maintaining the quality of the full video stream. In the case of fog, rain, and complete darkness, the constructed systems included an adaptive hybrid sensing architecture, that mixed the usage of 77 GHz automotive FMCW radar and uncooled long-wave infrared (LWIR) sensors. The system operated within an overall power envelope of =20 W and dynamically scaled the usage of the sensors. The pedestrian trajectories are incorporated through an ultra-lightweight vision and motion-history model (for example, a CNN-LSTM) to predict crossing intent, in an output time of less than 200 ms. The output is then provided using standard automotive interfaces including CAN bus and Automotive Ethernet, allowing integration with braking controllers and other high-level autonomous vehicle decisions. This invention provided high recall rates at night and eliminated false negatives, while improving the response timing of a vehicle to initiate braking before a pedestrian crossed in front of it—all without the expensive cost of using a thermal camera or cloud computation, while allowing a cost-effective and scalable solution for consumers and smart mobility applications.

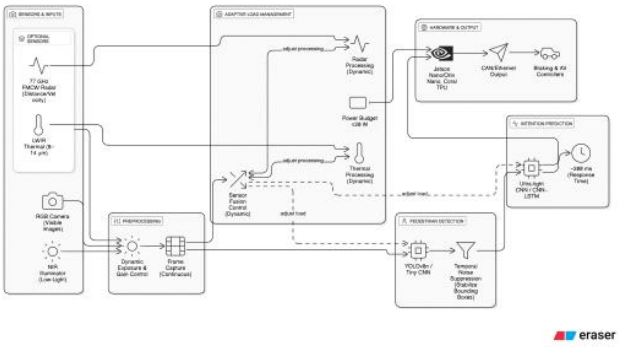

21: 2026/02631. 22: 2026/03/06. 43: 2026/10/19
51: A61K
71: MANGALAYATAN UNIVERSITY, ALIGARH, Syed Raashid Andrabi
72: Syed Raashid Andrabi

54: HERBAL FORMULATION COMPRISING DRIED QUINCE (CYDONIA OBLONGA) AND QUINCE SEED MUCILAGE FOR COUGH MANAGEMENT

00: -

The present invention relates to herbal formulation comprising dried quince (cydonia oblonga) and quince seed mucilage for cough management. The formulation exhibits dual activity as an antitussive and expectorant, achieved by the throat-coating

mucilage and bioactive antioxidants present in quince. It can be prepared in various dosage forms including syrups, lozenges, tea infusions, capsules, and dried slices. The formulation is safe, natural, cost-effective, and free from synthetic drugs, making it suitable for use in dry cough, productive cough, sore throat, bronchial irritation, asthma-related cough, and smoke-induced cough.

21: 2026/02632. 22: 2026/03/06. 43: 2026/10/19
51: G06Q
71: MANGALAYATAN UNIVERSITY, ALIGARH, Shweta, Kishan Pal Singh, Ashutosh Kumar
72: Shweta, Kishan Pal Singh, Ashutosh Kumar
54: ARTIFICIAL INTELLIGENCE ASSISTED SUPERCRITICAL TRANSESTERIFICATION SYSTEM FOR CONVERTING WASTE COOKING OIL TO BIODIESEL
00: -
Disclosed is an AI-optimized, catalyst-free system (100) for converting waste cooking oil into biodiesel via a multi-stage supercritical transesterification route. The system (100) includes a pre-treatment and heating unit (1), a multi-stage supercritical transesterification reactor (2), a methanol recovery unit (3), and a biodiesel separation and purification unit (4) operably coupled to a real-time AI control module (5). The AI control module (5) employs machine-learning models (51) including Adaptive Neuro-Fuzzy Inference System (ANFIS) and Random Forest Regression to continuously sense and regulate reaction temperature, pressure, oil-to-alcohol molar ratio, and residence time, thereby maximizing ester yield while reducing energy demand. A genetic algorithm executed in the module (5) further refines operating set-points. The purification unit (4) avoids water washing by using flash evaporation with vacuum distillation and/or adsorption. The system (100) provides biodiesel yields above 98% and supports scalable, sustainable, and cost-effective waste-to-energy production.

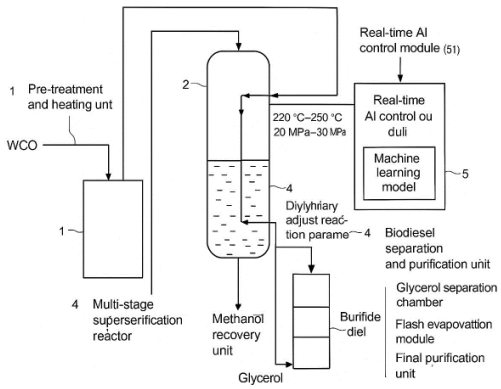

21: 2026/02634. 22: 2026/03/06. 43: 2026/10/19
51: F24F
71: VISHWAKARMA INSTITUTE OF TECHNOLOGY
72: HARIBHAU, Kuldeep, KAWARE, Abhishek Vijay, KATTI, Rohan, KALE, Atharav, SHARMA, Nakul, SHELKE, Priya, DEDGOANKAR, Suruchi
54: AN AI-ENHANCED AIR QUALITY MONITORING AND VENTILATION SYSTEM
00: -
The present invention is related to an AI-enhanced air quality monitoring and ventilation system. The invention provides an intelligent indoor air-quality monitoring, analysis, and automated ventilation system integrating multi-parameter sensing, real-time environmental correction, and a machine-learning-based anomaly detection module. It includes a microcontroller connected to a CO2/VOC sensor, a smoke and combustible-gas sensor, and a temperature-humidity sensor to continuously evaluate indoor air conditions with high precision. The sensed data is subsequently processed to determine pollutant concentration, humidity deviations, and thermal discomfort. Based on the values processed, a PWM-controlled fan and a servo-operated ventilation flap are actuated in order to regulate airflow and maintain healthy indoor air parameters. The system further includes an RGB LED and buzzer for localized visual and auditory alerts, along with an optional wireless communication interface to deliver mobile notifications and remote data access.

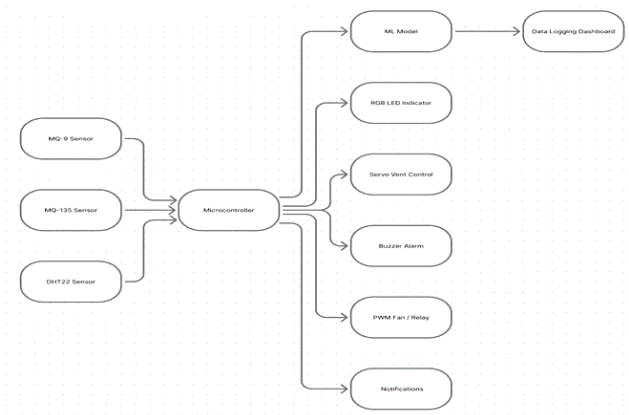

21: 2026/02635. 22: 2026/03/09. 43: 2026/10/19
51: A61M
71: Hangzhou Medical College
72: Qiuran Xu, Xiaoliang Zheng, Dongsheng Huang, Xiaoge Hu, Di Cui, Linglan Tu, Liyan Cheng
54: IN VITRO CONTROL SYSTEM FOR TARGETED DRUG DELIVERY MEDICAL DEVICE AND USE METHOD THEREOF
00: -

The invention proposes an in vitro control system for a targeted drug delivery medical device, comprising an in vitro control host, an implantable targeted drug delivery unit, a multi-axis magnetic field generation module, an imaging positioning and tracking module, and a closed-loop feedback regulation module. The multi-axis magnetic field generation module generates a controllable dynamic magnetic field outside the body, penetrating human tissue to achieve non-contact driving of the implantable targeted drug delivery unit. The imaging positioning and tracking module collects in vivo imaging data in real time and analyzes the spatial position and posture information of the implantable targeted drug delivery unit. Compared with the prior art, the invention has the advantage of providing an in vitro control system for a targeted drug delivery medical device and a method of using the same, achieving high-precision targeted locking and controllable drug release.

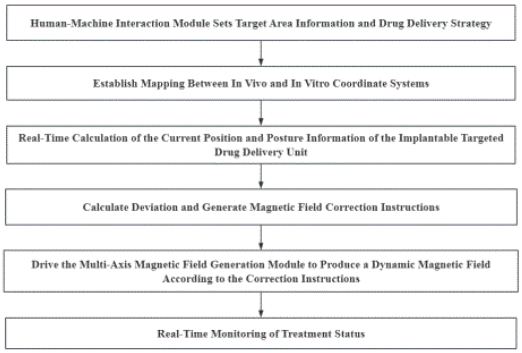

21: 2026/02636. 22: 2026/03/09. 43: 2026/10/19
51: F41H
71: Yang Liu
72: Yang Liu
54: NOVEL TANK
00: -

A novel tank, comprising a tank core section, a tank turret section, a missile launch silo, a missile, four driving compartment observation windows, a missile rotary loading mechanism, and running tracks. The tank turret section is fixedly installed above the tank core section in a truncated pyramidal shape, with its sloped armor surfaces enhancing protective capability. The missile launch silo is vertically arranged at the center of the tank turret section, the missile is adaptively installed within the missile launch silo, and the missile rotary loading mechanism replenishes ammunition for the missile. The four driving compartment observation windows are respectively arranged at the four corners of the tank core section, providing omni-directional visibility. The novel tank balances air defense and ground strike capabilities, enhances situational awareness, simplifies the structure, reduces costs, adapts to modern multi-dimensional battlefields, and facilitates mass production and deployment.

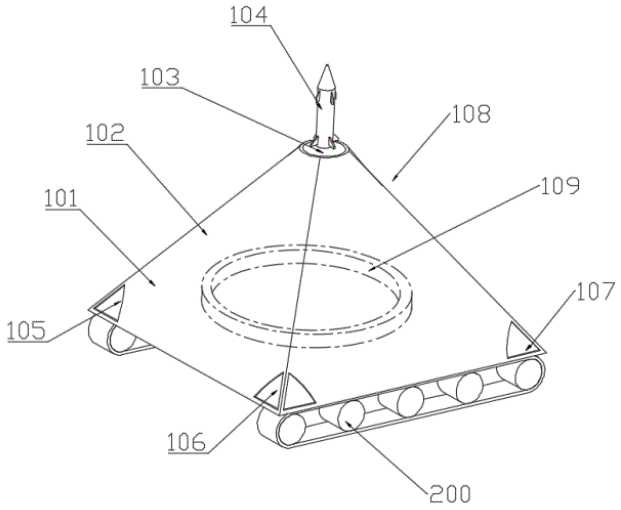

21: 2026/02637. 22: 2026/03/09. 43: 2026/10/19
51: G01D
71: Guangdong Zhongke Energy Storage Development Co., Ltd.
72: Guohui He
54: AN INTELLIGENT SUPERVISION METHOD AND SYSTEM FOR BIPV EQUIPMENT GROUPS
00: -

The present invention relates to the technical field of intelligent supervision, specifically to an intelligent supervision method and system for a BIPV equipment group. It includes stress topology construction: analyzing the cable materials, lengths, and channel types in the cable list, calculating the initial safety margin, and generating an equipment connection topology with stress tolerance thresholds; settlement compensation path decision - making: based on the equipment connection topology, acquiring real - time building settlement monitoring data and generating an anti - settlement dynamic path plan with the stress safety margin as a constraint; stress chain diagnosis: when the cable deformation is detected to exceed the limit, tracing back the high - risk channel sections according to the anti - settlement dynamic path plan, highlighting the stress - accumulation risk chain, and outputting the mechanical compensation plan. The present invention effectively avoids cable damage and equipment failure caused by long - term stress accumulation. The overall solution has the capabilities of structural self - perception, dynamic disturbance resistance, and pre - fault regulation and control, significantly improving the maintainability and full - life - cycle reliability of the BIPV system in building integration scenarios.

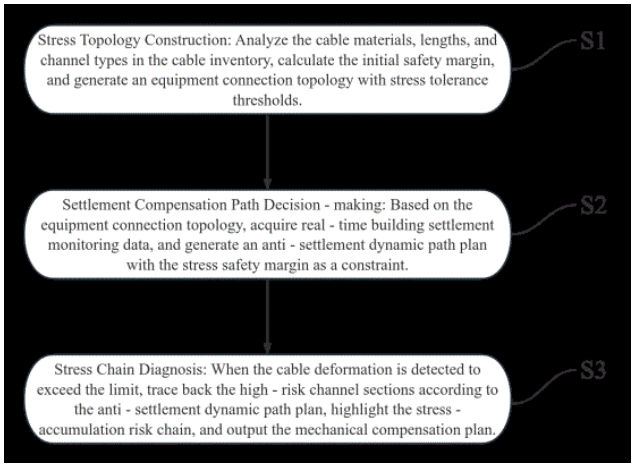

21: 2026/02639. 22: 2026/03/09. 43: 2026/10/19
51: A47B
71: Shandong University of Finance and Economics
72: Hui WU, Kai PEI
54: FINANCIAL AND ECONOMIC MATERIAL ORGANIZING APPARATUS
00: -

The present invention relates to the technical field of bookcases and discloses a financial and economic material organizing apparatus, including a support base, a sliding and pressing placement assembly, and a classification placement assembly, where an upper end of the support base is connected to the classification placement assembly through support rods; the classification placement assembly includes sliding rods and sliding bearing plates; two ends of the sliding rod are fixedly connected to the support base and the classification placement assembly, respectively, and the sliding bearing plate is slidably connected to the sliding rod; positioning apparatuses are provided on the sliding rod; a limiting baffle is rotatably connected to each of a lower surface of the classification placement assembly and a lower surface of the sliding bearing plate, and traveling apparatuses are provided at a lower end of the support base.

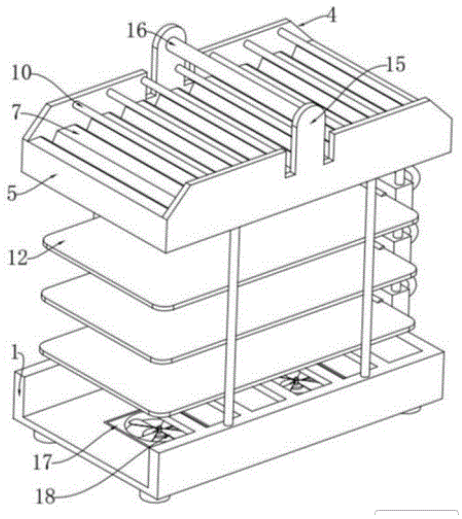

21: 2026/02640. 22: 2026/03/09. 43: 2026/10/19
51: B04B
71: Ningxia Silane Chemical and Environmental Technology Co., Ltd
72: SHEN, Jun, ZHAO, Yan
33: CN 31: 202511003656.3 32: 2025-07-21

54: ORGANOSILICON SLURRY SEPARATION METHOD AND SYSTEM

00: -

Disclosed are an organosilicon slurry separation method and system. The method includes: feeding the slurry into a high-speed centrifuge in batches, and determining a separation strategy based on slurry batches: acquiring the slurry batches and slurry batch parameters, and acquiring a corresponding separation strategy based on the slurry batch parameters; monitoring and acquiring sensing data of pressure sensing devices in real time, and performing time-series analysis on pressure sensing device array values to determine whether to adjust separation parameters; and determining a to-be-switched separation parameter set based on a current separation parameter set and a current separation strategy, and updating centrifuge parameters based on the to-be-switched separation parameter set. In the present invention, separation control big data information is integrated, and an interface compatible with an intelligent control model is provided. From a time-series perspective, data-driven separation control is adopted, thereby solving the problem of response lag in conventional methods.

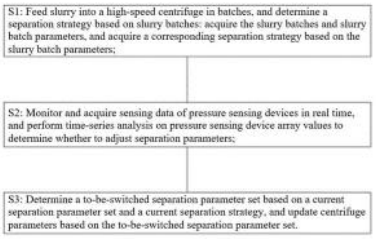

21: 2026/02647. 22: 2026/03/09. 43: 2026/10/19
51: G06Q
71: VISHWAKARMA INSTITUTE OF TECHNOLOGY
72: JAGTAP, Sahil Sachin, MARADE, Mayuresh Bhausaheb, SHINDE, Omkar Dilip, SAWANT, Rugved Tanaji, SABLE, Nilesh, MAHALLE, Parikshit, PANDIT, Pranjal S., YENKIKAR, Anuradha V.

54: AN AGRICULTURAL SYSTEM FOR CROP DISEASES DETECTION, PESTICIDES RECOMMENDATION AND MARKET PRICE FORECASTING

00: -

The present invention is related to an agricultural system for crop diseases detection, pesticides recommendation and market price forecasting. This innovation offers a single intelligent system that is intended to modernize agriculture using machine learning, high accuracy, deep learning, identify plant problems, with several comprehensive decision-support tools. The main idea was to provide farmers with one platform to identify and treat crop diseases in addition to various real-time information, such as weather forecasts for their local area, changing market prices for produce, and any applicable government support schemes to improve efficiency, profitability and sustainability of their farming.

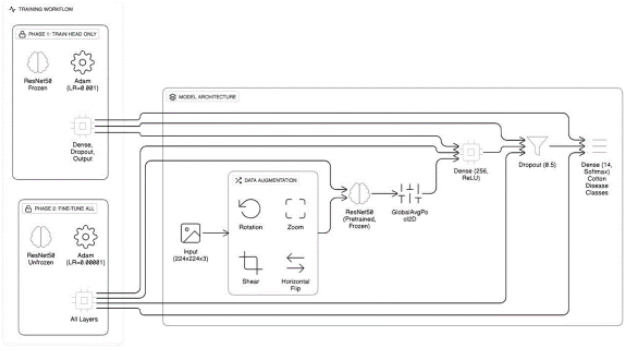

21: 2026/02648. 22: 2026/03/09. 43: 2026/10/19
51: G06F
71: VISHWAKARMA INSTITUTE OF TECHNOLOGY

72: GOYANKA, Ansh, SHAH, Neel, KAIRAMKONDA, Parth, SABLE, Nilesh, RAUT, Ketan, YENKIKAR, Anuradha, PANDIT, Pranjal

54: A SWARM-BASED EDGE COMPUTING SYSTEM FOR EFFECTIVE TASK MANAGEMENT

00: -

The present invention is related to a swarm-based edge computing system for effective task management. This invention discloses an intelligent swarm-based edge computing platform that enables a network of decentralized devices to function as a single, resilient computational entity. The platform overcomes the critical limitations of traditional edge computing, such as single points of failure, high latency, and security vulnerabilities in untrusted environments. It synergistically integrates three core components: (1) a Distributed Swarm Task Partitioning (STP) algorithm with predictive failure modeling to ensure operational continuity; (2) a Reputation-Based Task Assignment (RTA) protocol that establishes trust and assigns critical tasks to the most reliable nodes; and (3) a Cross-Device "Memory Fusion" mechanism that pools memory from multiple devices to execute resource-intensive tasks. This integrated system allows the swarm to securely and efficiently perform complex AI and data processing tasks that would be impossible for any single system, providing a robust solution for mission-critical applications in fields such as autonomous vehicles, Industrial IoT, and smart city infrastructure.

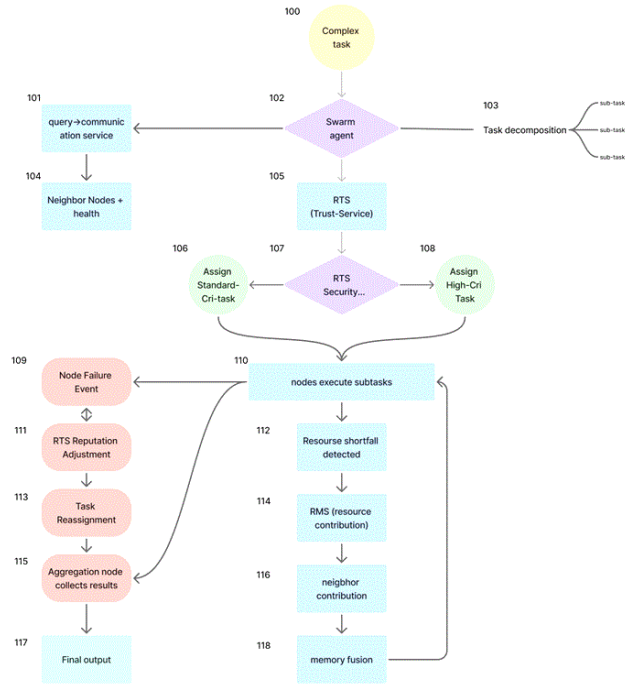

21: 2026/02649. 22: 2026/03/09. 43: 2026/10/19

51: G06Q

71: VISHWAKARMA INSTITUTE OF TECHNOLOGY

72: MOHAGAONKAR, Anvay Hrushikesh, GANDHI, Akshat Prashant, KALE, Shashwati Pritam, PANDIT, PranjaL, YENKIKAR, Anuradha, SABLE, Nilesh, CHAVAN, Umesh

54: AN AI-POWERED SHOPPING CART WITH TWO CAMERAS AND DYNAMIC QR FOR RETAIL CHECKOUT AND FRAUD PREVENTION

00: -

The present invention is related to an AI-powered shopping cart with two cameras and dynamic QR for retail checkout and fraud prevention. The modular architecture of the system preserves its essential fraud prevention features while enabling customized implementations across these various applications. Its usefulness may be expanded in the future to include related fields like automated rental systems and smart vending machines. Retail checkout is automated and theft is avoided with a smart cart equipped with dual cameras, weight sensors, and edge AI. By scanning products, verifying placements, and creating a secure QR code for payment, it cuts down on billing time by 70%. It is offline, supports regional languages, and identifies fraud attempts such as barcode swaps or unscanned items.

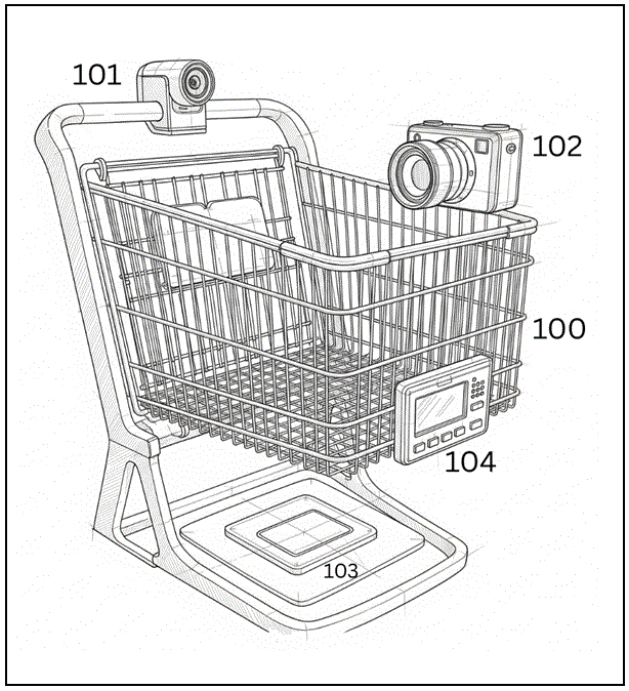

21: 2026/02650. 22: 2026/03/09. 43: 2026/10/19
51: H04L
71: VISHWAKARMA INSTITUTE OF TECHNOLOGY
72: KHAIRNAR, Shlok Pankaj, GORE, Shirdhar Ganesh, SHINDE, Aditya, PANDIT, Pranjal S, YENKIKAR, Anuradha, SABLE, Nilesh P

54: A DECENTRALIZED WEB3-BASED CAPTIVE PORTAL SYSTEM FOR TOKEN-GATED NETWORK ACCESS CONTROL

00: -

The present invention is related to a decentralized Web3-based captive portal system for token-gated network access control. The invention relates to a decentralized, Web3-based wireless access control system that utilizes blockchain assets—such as tokens and non-fungible tokens (NFTs)—as authentication credentials for granting internet access via a captive portal. The system comprises a hardware device, such as a Raspberry Pi, configured with open-source networking tools including OpenNDS, hostapd, and dnsmasq to create a wireless access point and manage network services. A custom captive portal, developed using modern web technologies (Next.js and Node.js), prompts users to connect their Web3 wallets and cryptographically sign a message. The backend service then verifies ownership of blockchain-based assets (ERC20, ERC721, or ERC1155) by querying public blockchains. Based on predefined access rules—such as holding specific NFTs or token balances—the system determines whether to authorize or deny internet access. The invention securely integrates blockchain authentication at the network layer using forward authentication mechanisms and operates without reliance on centralized identity providers or external servers. It supports flexible, rule-based access policies and is deployable in localized environments such as events, transportation hubs, and decentralized venues, thereby enabling a novel application of token-gated network access.

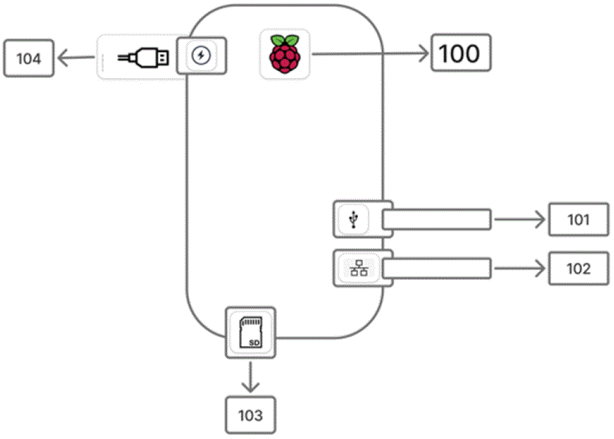

21: 2026/02651. 22: 2026/03/09. 43: 2026/10/19
51: G06Q
71: VISHWAKARMA INSTITUTE OF TECHNOLOGY
72: BADGUJAR, Krish Govinda, MHASALKAR, Om Ajay, RAUT, Sahil Kisan, GHADAGE, Samarth, WAWAGE, Pawan

54: AN AI BASED PERSONALIZED VEHICLE ACCESSORY CUSTOMIZATION & RECOMMENDATION SYSTEM

00: -

The present invention is related to an AI based personalized vehicle accessory customization & recommendation system. An artificial intelligence-powered hybrid recommendation system provides personalized vehicle accessory recommendations integrating multiple advanced techniques: TF-IDF-based content similarity analysis, multi-aspect sentiment analysis evaluating eight product dimensions using hybrid VADER and TextBlob algorithms achieving 87.5% accuracy, emotion detection identifying five emotional states, technical

compatibility verification, and weighted hybrid scoring combining six normalized components (0.15 content, 0.30 compatibility, 0.25 sentiment, 0.15 emotion, 0.10 budget, 0.05 category). An explainable AI module generates human-readable explanations through score decomposition showing factor contributions. System achieves 86.8% recommendation precision and sub-300ms response times. Validation studies on 500 vehicle-accessory-review combinations demonstrate 84% user preference over competitors, 92% explanation helpfulness rating, 23% conversion rate increase, and 31% return reduction in pilot automotive retail deployments. Modular microservice architecture scales to 10,000+ accessories and 500,000+ reviews. Cross-compatibility detection identifies multi-model compatible accessories. Applications include automotive e-commerce platforms, manufacturer programs, dealerships, multi-brand marketplaces, and fleet management systems.

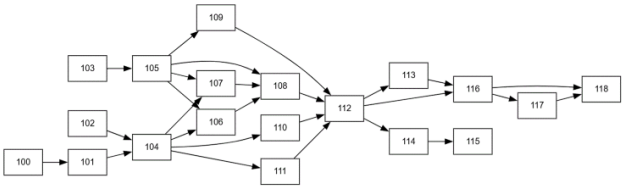

21: 2026/02652. 22: 2026/03/09. 43: 2026/10/19
51: G06Q
71: VISHWAKARMA INSTITUTE OF TECHNOLOGY
72: KUNEKAR, Pankaj, GIRAME, Mrunmai, Kadam, Sai, Shaikh, Ifra

54: AN AI-DRIVEN ETL (EXTRACT-TRANSFORM-LOAD) AUTOMATION & REAL-TIME ANALYTICS SYSTEM

00: -

The present invention is related to an AI-driven ETL (Extract-Transform-Load) automation & real-time analytics system. The invention combines and process data in various heterogeneous databases through a schema-agnostic architecture. It automates the entire ETL process extraction, transformation and loading, and uses a Hybrid Anomaly Detection Algorithm which is a statistical analysis combined with a semantic reasoning Transformer based on Large Language Models. An Automated Monitoring Plan Generator is a dynamically changing thresholds and alerts based on historical trends and a Universal LLM Analysis Algorithm allows users to ask questions of the data in natural language. The system also includes an AI-based visualization engine to create context-sensitive dashboards and a collaborative interface combined with communication applications like Slack and Microsoft Teams. This invention guarantees the existence of low-latency, explainable and scalable analytics which allow organizations to take data-driven decisions in real-time without writing queries manually or needing subject-domain knowledge.

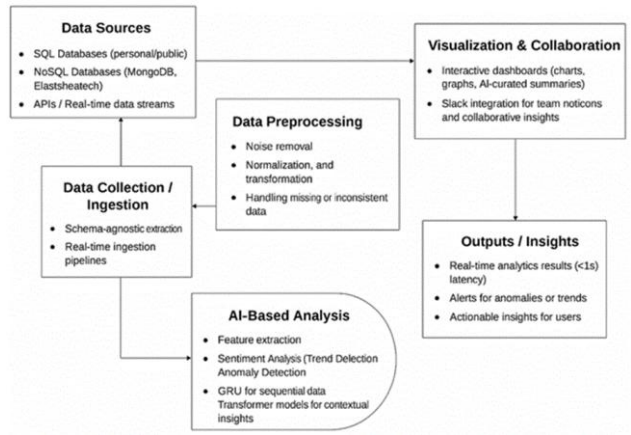

21: 2026/02653. 22: 2026/03/09. 43: 2026/10/19
51: G06F
71: VISHWAKARMA INSTITUTE OF TECHNOLOGY
72: KUNEKAR, Pankaj, KHAN, Ayaan, VERMA, Kshitij, CHILLALE, Krish, KULKARNI, Samarth Prasheel, KOLPAKWAR, Shrawan Sunil

54: A SYSTEM FOR AUTOMATED MULTIMODAL MEDIA GENERATION FROM A TEXTUAL DATA SOURCE

00: -

The present invention is related to a system for automated multimodal media generation from a textual data source. A system for automatically transforming textual news articles into engaging multimodal media, such as memes and short videos. The system addresses the declining engagement with traditional text-based reports by catering to modern content consumption preferences. The invention comprises a multi-stage pipeline that first retrieves and filters real-time news headlines. A large language model then processes a selected headline to generate a structured concept containing a humorous caption and a visual description. A generative image model synthesizes an image from

this description, onto which the caption is overlaid. The final media is automatically checked for ethical compliance and published to social media platforms. This automated process enhances information accessibility, boosts audience engagement, and significantly reduces manual content creation efforts.

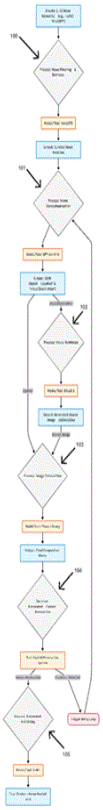

21: 2026/02654. 22: 2026/03/09. 43: 2026/10/19
51: G01S
71: VISHWAKARMA INSTITUTE OF TECHNOLOGY
72: GAVIT, Pavan Babulal, SHINDE, Ashutosh Shantaram, REWADE, Divya Subhash, WARME, Kaustubh Ravindra, SABLE, Nilesh, RAUT, Ketan, YENKIKAR, Anuradha, PANDIT, Pranjal

54: A DEEP LEARNING–BASED DIRECTION FINDER SYSTEM FOR CLASSIFICATION OF LPI SIGNALS INTO BURST AND FREQUENCY HOPPING WITH HOP RATE ESTIMATION

00: -

The present invention is related to a deep learning–based direction finder system for classification of LPI signals into burst and frequency hopping with hop rate estimation. This invention introduces a deep learning-based direction finder system designed to classify low probability of intercept (LPI) signals and estimate hop rates. It is made up of an antenna array, RF front-end, preprocessing unit, and a deep learning module. The system turns I/Q samples into spectrograms, which are then processed by a multi-task CNN architecture to figure out if signals are fixed frequency, burst, or frequency hopping, and it also estimates the hop rates for frequency hopping signals. Outputs are added into the DF stacks to make geolocation more accurate and things run smoother. The invention works really well even when there is noise or signal fading, so it is especially useful for things like electronic warfare, keeping an eye on the range, adaptive radios, and secure communication monitoring.

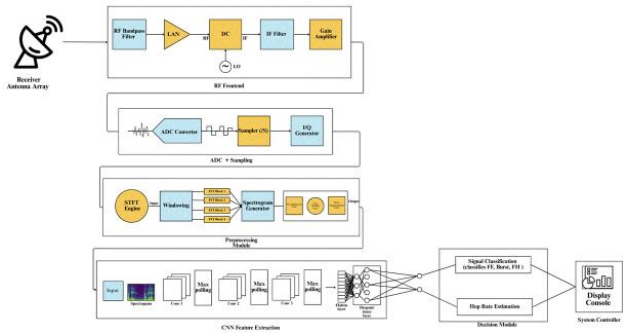

21: 2026/02655. 22: 2026/03/09. 43: 2026/10/19
51: G06N
71: VISHWAKARMA INSTITUTE OF TECHNOLOGY
72: KUNEKAR, Pankaj, LANKE, Atharva Popat, KARHADKAR, Aditya, KHAIRNAR, Atharva, LANGHE, Swaraj Ashok, LONKAR, Anuraj

54: AN AI POWERED PREDICTIVE AND REINFORCEMENT LEARNING SYSTEM FOR ENERGY OPTIMIZATION IN INDUSTRIAL AND COMMERCIAL BUILDINGS

00: -

The present invention is related to an AI-powered predictive and reinforcement learning system for energy optimization in industrial and commercial buildings. The invention provides an AI-powered hybrid framework that integrates LSTM-based predictive modeling with PPO-based reinforcement learning for energy optimization in buildings. The system forecasts short-term energy demand, dynamically adjusts device operations, and provides real-time visualization via a web dashboard. This invention offers a scalable, self-learning, and environmentally sustainable solution for intelligent

energy management across industrial and commercial infrastructures.

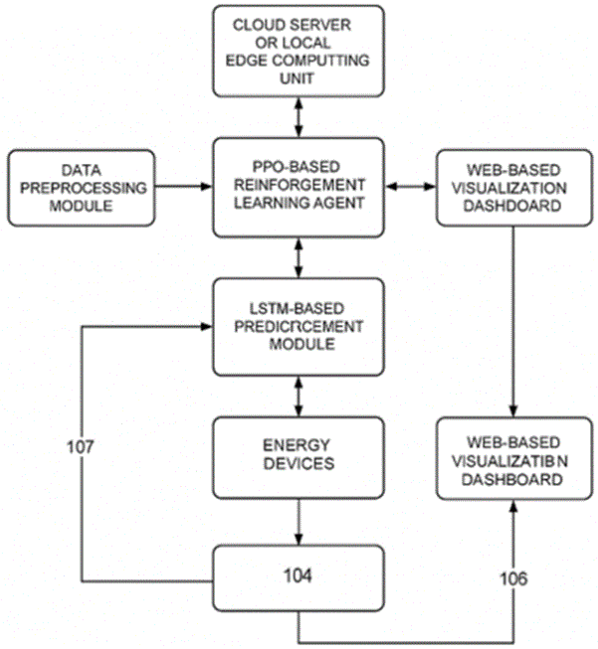

21: 2026/02656. 22: 2026/03/09. 43: 2026/10/19
51: G06T
71: VISHWAKARMA INSTITUTE OF TECHNOLOGY
72: KALE, Aditya Prashant, SATALKAR, Tanmay Bharat, PAWAR, Swaraj Rajendra, PANDIT, Pranjal, YENKIKAR, Anuradha, SABLE, Nilesh, GADGE, Mahendra

54: AN AI-POWERED AUGMENTED REALITY SYSTEM FOR RETAIL NAVIGATION AND PRODUCT INFORMATION

00: -

The present invention is related to an AI-powered augmented reality system for retail navigation and product information. The current invention relates to an Augmented Reality (AR) software platform equipped with Artificial Intelligence (AI) with a particular focus on improving retail shopping and mall navigation. The software runs on smart glasses and smartphones allowing users to see and interact with real time product details, pricing, and AR-enabled virtual shopping carts using AI object recognition. The system offers AR-enabled indoor routing and navigation to help users find stores and product categories within shopping malls. Businesses can manage and control product information, stock, and even the arrangement of different stores from a central web portal which is connected to a cloud backend. This invention eliminates the complexity and convenience of barcode scanning, costly store hardware, and system provides a ready-to-operate AR shopping ecosystem, all while lowering operational costs and enhancing user convenience.

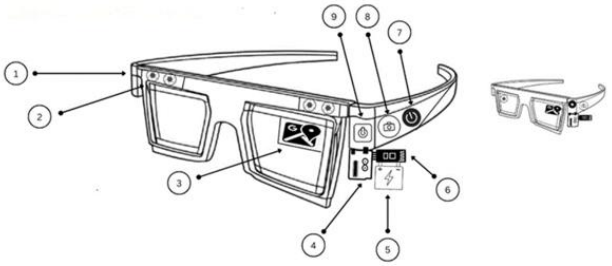

21: 2026/02657. 22: 2026/03/09. 43: 2026/10/19
51: A61B
71: VISHWAKARMA INSTITUTE OF TECHNOLOGY
72: KUNEKAR, Pankaj, PADATE, Gargi Sitaram, PAGARIYA, Arham Paresh, NARLAWAR, Vedika Pravin, SHARMA, Nidhi, CHOUDHARY, Nimita Sanjeev Kumar

54: A NOISE-TOLERANT MULTI-DATASET EEG BASED SYSTEM FOR EPILEPTIC SEIZURE PREDICTION AND MULTI-TYPE CLASSIFICATION

00: -

The present invention is related to a noise-tolerant multi-dataset EEG based system for epileptic seizure prediction and multi-type classification. This invention is a computer-implemented system for noise-tolerant electroencephalogram (EEG)-based seizure detection and multi-type classification. Multi-channel EEG from Indian (BEED, Delhi EEG) and global (Bonn, UCI, CHB-MIT) datasets is processed by a three-stage pipeline—0.5–50 Hz Butterworth bandpass, 50/60 Hz notch, and Daubechies-4 wavelet denoising—to suppress EMG, EOG, motion, and powerline artifacts. Multi-domain features (time, frequency, entropy) are reduced via PCA (=95% variance) and LASSO to 15–20 features and classified by an ensemble of SVM, Random Forest, and XGBoost with logistic stacking. The framework provides dual-mode output: binary seizure detection (99.9% accuracy) and five-type seizure classification (96.5% accuracy). Cross-patient generalization is established via Leave-One-Subject-Out, averaging 91.2% across datasets. A SHAP-based module supplies per-decision feature attributions for clinical

transparency. The system operates in real time on low-cost edge devices (e.g., Raspberry Pi/Jetson), supports offline-first workflows with cloud synchronization, and is tailored to India's 50 Hz electrical environment to reduce deployment cost and enable scalable adoption in hospitals and telemedicine.

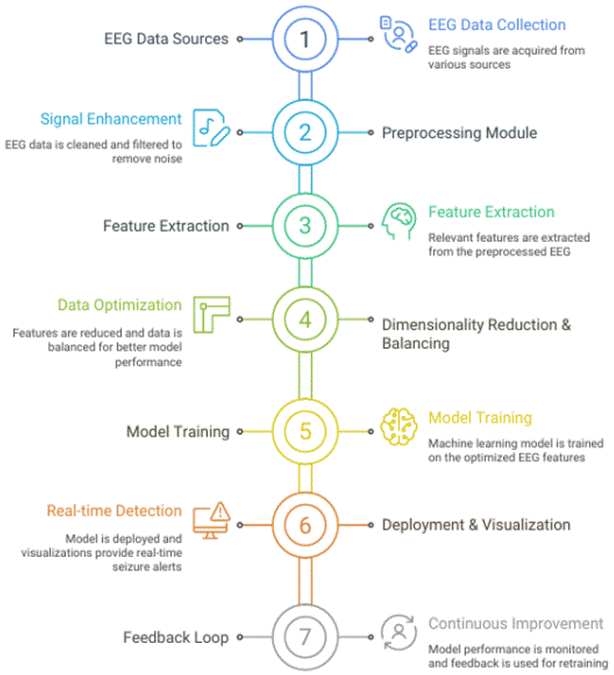

21: 2026/02658. 22: 2026/03/09. 43: 2026/10/19
51: G06T
71: VISHWAKARMA INSTITUTE OF TECHNOLOGY
72: KUNEKAR, Pankaj, YADAV, Aditya Rahul, YADAV, Abhishek Avadesh, DUSANKAR, Yash Ajit, NALAWADE, Yashraj Sopan, YAWALE, Swarnim Prafull

54: A HYBRID SWIN TRANSFORMER-EFFICIENTNET-U-NET SYSTEM FOR ENHANCED BRAIN TUMOR SEGMENTATION

00: -

The present invention is related to a hybrid Swin Transformer-EfficientNet-U-Net system for enhanced brain tumor segmentation. The invention introduces the Hybrid Swin Transformer–EfficientNet–U-Net model for precise brain tumor segmentation from MRI scans. By integrating the global contextual strength of Swin Transformer with the computational efficiency of EfficientNet and the spatial precision of U-Net, the model achieves superior segmentation accuracy with an average Dice score of 0.7086. It effectively delineates multiple tumor subregions while maintaining computational efficiency, making it suitable for clinical diagnostic applications and automated medical imaging system.

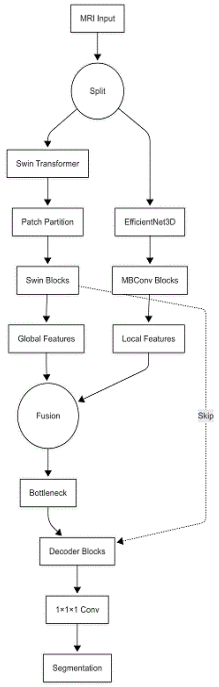

21: 2026/02659. 22: 2026/03/09. 43: 2026/10/19
51: G06Q
71: VISHWAKARMA INSTITUTE OF TECHNOLOGY
72: DONGARE, Prema Tukaram, AWASARMAL, Urmila Vikas, PANDIT, Pranjal, YENKIKAR, Anuradha, SABLE, Nilesh, AMBHORE, Vishal, GADGE, Mahendra

54: AN IOT INTEGRATED ARTIFICIAL INTELLIGENCE BASED AGRICULTURAL WASTE FORECASTING SYSTEM

00: -

The present invention is related to an IOT integrated artificial intelligence based agricultural waste forecasting system. A machine learning-based agricultural waste prediction system is developed to help farmers handle leftovers wastage efficiently after harvest. It forecasts the quantity and price of crop wastage, such as husks, straw, stalks, and leaves, through machine learning. Farmers can use the platform to connect with authenticated buyers, post categorized wastage for sale, and receive real-time price notifications. It also offers carbon credit tracking and bi-lingual voice assistance to promote sustainable practices and increase farmer revenues.

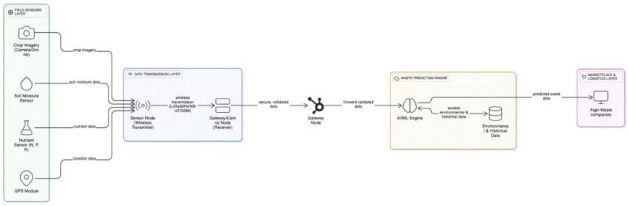

21: 2026/02660. 22: 2026/03/09. 43: 2026/10/19
51: G06N
71: VISHWAKARMA INSTITUTE OF TECHNOLOGY
72: CHINCHOLE, Atharva Ajay, JAGTAP, Dhananjay Siddhanath, PANDIT, Pranjal, YENKIKAR, Anuradha Vishwajit, SABLE, Nilesh Popat, CHOUDHARI, Prasad

54: AN AI-POWERED REFEREE AND COACHING SYSTEM FOR KHO-KHO USING COMPUTER VISION AND WEARABLE MOTION SENSORS

00: -

The present invention is related to an AI-powered referee and coaching system for Kho-Kho using computer vision and wearable motion sensors. This invention relates to an AI-referee system that is specifically developed for the traditional Indian game of Kho-Kho. The system combines state-of-the-art computer vision algorithms with wearable sensor technology to precisely identify player movements, touches, and fouls, preventing human bias in decision-making. By employing a blend of TimeSformer and Pose-based Transformer models, the system processes live video feeds in real time to monitor player locations and recognize pose-based actions. HRNet is utilized to derive high-resolution keypoints of player joints to accurately perceive posture and contact events. Also, wrist-worn sensor bands with motion and touch detection modules confirm physical interactions among players. The combination of visual and sensor data allows the system to identify valid touches, attempted tagging, zone violations, and other rule infractions automatically. A decision engine then produces instant referee calls and match updates. The system is also equipped with data logging and performance analysis, thus being a useful tool for live match refereeing as well as coaching sessions. This invention will introduce transparency, accuracy, and impartiality to Kho-Kho, modernizing the game with artificial intelligence power and wearable technology.

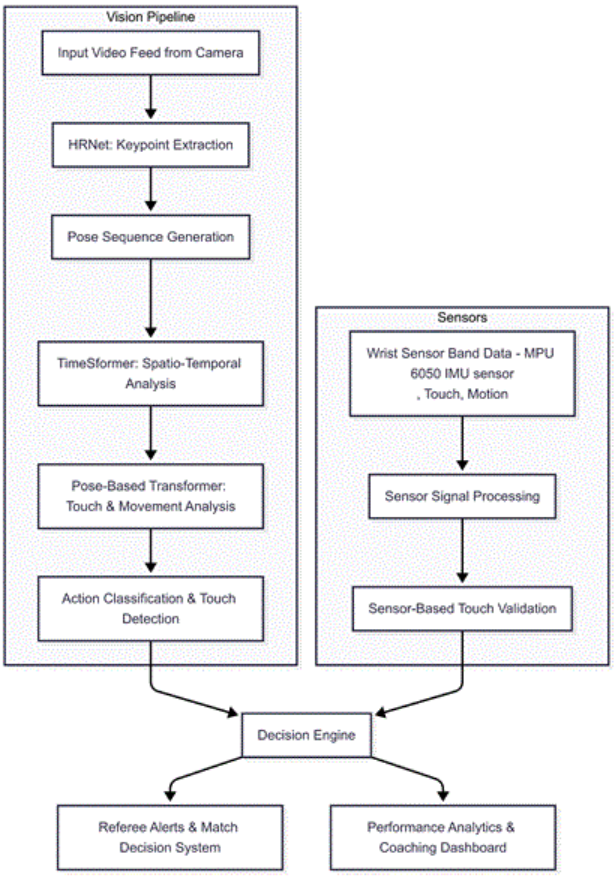

21: 2026/02661. 22: 2026/03/09. 43: 2026/10/19
51: A61B
71: VISHWAKARMA INSTITUTE OF TECHNOLOGY
72: PANDIT, Pranjal, PISE, Reshma, YENKIKAR. Anuradha, BHANGALE, Dev Dipak, PRASAD, Prachee Sunil Kumar, SAYYAD, Aziz Abdulhamid, MULE, Vivek Vinayak

54: AN AI AND MULTI-SENSORY REGULATION BASED WEARABLE DEVICE FOR EARLY ANXIETY ANTICIPATION

00: -

The present invention is related to an AI and multi-sensory regulation based wearable device for early anxiety anticipation. The device concurrently acquires heart rate variability, skin conductance, and fine tremor signals, extracts fused features, and applies a layered detection algorithm combining fast rule-based triggers, anomaly scoring, and lightweight classification to identify imminent anxiety. On detection, the device automatically delivers graded multi-sensory interventions including rhythmic haptic breathing, mild thermal modulation, gentle pressure, subtle light pulsing, brief guided audio which

escalate progressively if physiological markers persist. The invention continuously adapts itself for individual baselines, employs motion and contact filtering to reduce the false positives, and logs events locally with configurable privacy controls. An opt-in emergency escalation pathway can notify trusted contacts. This integrated anticipatory approach will enable discreet, early intervention that will reduce symptom escalation, improve user adherence, and support wellness and clinical applications. The invention is suitable for consumer and clinical deployment.

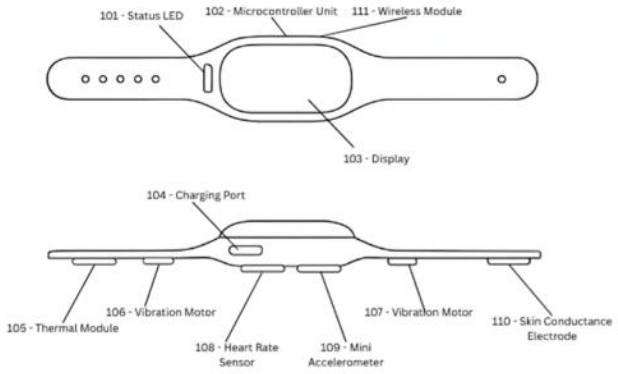

21: 2026/02662. 22: 2026/03/09. 43: 2026/10/19
51: G06F
71: VISHWAKARMA INSTITUTE OF TECHNOLOGY
72: AGRAWAL, Krish Anurag, BHANOSE, Rujuta Rahul, JOGLEKAR, Niranjan Manish, BODKE, Partha Ashish, PANDIT, Pranjal, YENKIKAR, Anuradha, SABLE, Nilesh, SURYAWANSHI, Amol

54: AN NLP BASED REAL-TIME MULTI-DOMAIN COMPARATIVE DATA AGGREGATION SYSTEM

00: -

The present invention is related to an NLP based real-time multi-domain comparative data aggregation system. This invention is basically a smart system that helps people compare information from different apps and services in real time. Instead of forcing users to use strict commands or dig through a dozen apps, they can just ask a question in plain, everyday language as well as can type it or even speak it. The system understands what users mean, figures out the important details including what they want, their preferences, or where they are and then instantly checks multiple services at once. For example, it can pull prices from shopping sites, fares and wait times from ride-hailing apps, menus and delivery times from food apps, or hotel and travel options from booking platforms. It then gathers all that scattered information, organizes it, and shows it back to them in one clear view. On top of that, it uses machine learning to filter and rank the results so that the most useful and reliable options come up first.

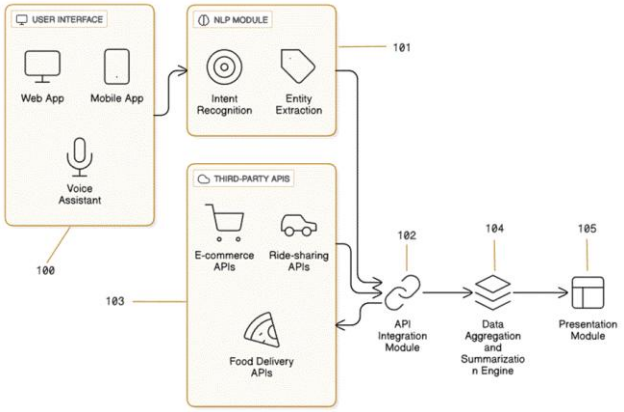

21: 2026/02663. 22: 2026/03/09. 43: 2026/10/19
51: G06F
71: VISHWAKARMA INSTITUTE OF TECHNOLOGY
72: VAIDYA, Varad Digambar, TALIKOTI, Mrunal Ajay, BOTHARA, Harsh Sagar, JAISINGPURE, Harsh Ganesh, SABLE, Nilesh, MAHALLE, Parikshit, YENKIKAR, Anuradha, PANDIT, Pranjal

54: AN INTELLIGENT ACOUSTIC SURVEILLANCE SYSTEM FOR UNAUTHORIZED HONKING WITH AUTO-FINE MECHANISM

00: -

The present invention is related to an intelligent acoustic surveillance system for unauthorized honking with auto-fine mechanism. The invention incorporates AI-enabled intelligent acoustic surveillance systems designed specifically to monitor and sanction unauthorized or unneeded vehicle honking in real time. The system combines the use of directional microphones, honk filtering algorithms, and vehicle identification via camera technologies to capture the source of honking with precision, classify the honked as permitted or unpermitted, and automatically document the evidence. The vehicle and honk recognition are done separately using machine learning algorithms as well as OCR and ANPR for categorizing the license plates. Once the violation is identified, the system interfaces with a central traffic violation database for automated sanction generation and payment, fully eliminating the need for manual processing. Reducing the violations of traffic laws quoted in the system

enhances smart city and traffic management systems while simultaneously alleviating urban noise pollution and traffic discipline at a low cost and high scalability.

21: 2026/02666. 22: 2026/03/09. 43: 2026/10/16
51: H04N
71: NOKIA TECHNOLOGIES OY
72: ASTOLA, Pekka, LAINEMA, Jani
33: US 31: 63/589,483 32: 2023-10-11
54: A METHOD, AN APPARATUS AND A COMPUTER PROGRAM PRODUCT FOR VIDEO ENCODING AND DECODING
00: -
The embodiments concern an apparatus comprising means for processing an image to predict a block according to prediction samples of two prediction blocks; for determining when both of the two prediction blocks for the block are within boundaries of the image, and for applying a bi-prediction based on said two prediction blocks for the block resulting in a bi-prediction block; for determining when one of the two prediction blocks is at least partially out of the image's boundaries, and for applying a uni-prediction based on the prediction block within image boundaries resulting in a uni-prediction block; for deriving filter coefficients based on selected set of samples of the bi-prediction block, wherein the selected set of samples comprises samples that have been subsampled in the bi-prediction block according to a subsampling method; and for filtering at least a part of the uni-prediction block according to the filter coefficients.

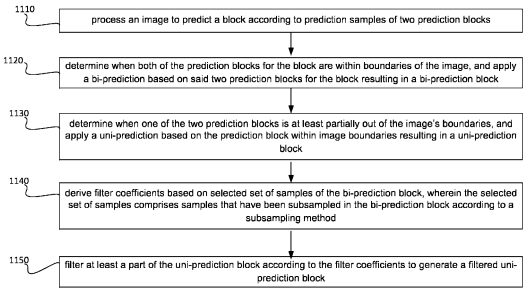

21: 2026/02670. 22: 2026/03/09. 43: 2026/10/19
51: C12N
71: JHAVER, Madhu, JU Agri Sciences Private Limited
72: JHAVER, Madhu, CHAUHAN, Dinesh Kumar, REDDY, Srinivasa L.
33: IN 31: 202441076523 32: 2024-10-09
54: FUNGICIDAL COMPOSITION AND PROCESS OF PREPARATION THEREOF
00: -
An agrochemical composition comprising at least one strobilurin fungicide; and at least one triazole fungicide. The invention further relates to formulations comprising the composition of the present invention and a method of controlling pests infesting plants, especially crops.

21: 2026/02671. 22: 2026/03/09. 43: 2026/10/21
51: H02J
71: DYNESS DIGITAL ENERGY TECHNOLOGY CO., LTD.
72: HUANG, Wei, LI, Cheng, LIU, Yang
33: CN 31: 202311476281.3 32: 2023-11-08
54: HYBRID ENERGY STORAGE SYSTEM AND CONTROL METHOD THEREFOR
00: -
The present application relates to the technical field of energy storage control. Disclosed are a hybrid energy storage system and a control method therefor. The hybrid energy storage system comprises a photovoltaic power generation unit, a battery unit, an oil engine power generation unit, a load, a bi directional converter and a direct current bus. The control method comprises: on the basis of a power generation state of a photovoltaic power generation unit, determining an energy input state of a hybrid energy storage system, wherein the energy input state comprises the presence of a photovoltaic input and the absence of a photovoltaic input; and on the basis of the energy input state of the hybrid energy storage system and a pre constructed energy interaction control model, controlling an operation mode of the hybrid energy storage system, wherein the operation mode of the hybrid energy storage system comprises one or more of an operation mode of the photovoltaic power generation unit, an operation mode of a battery unit, and an operation mode of an oil engine power generation unit. The energy storage system and the control method therefor solve the problems of requirements for the collection and control over the frequency, phase and amplitude of a system energy source being relatively high, and the energy utilization rate being relatively low.

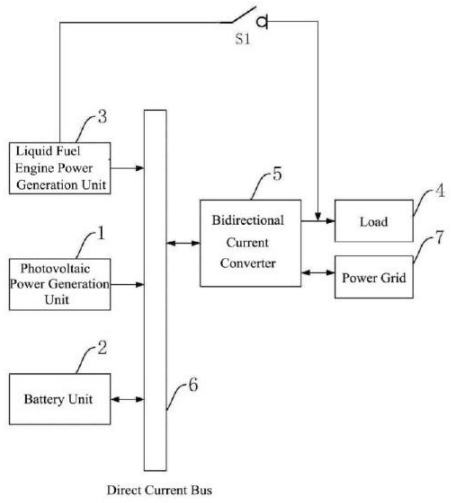

21: 2026/02673. 22: 2026/03/09. 43: 2026/10/21
51: A61K; A61Q
71: L'OREAL
72: LIANG, Jun, SHAH, Vibha
33: US 31: 18/490,618 32: 2023-10-19
33: FR 31: FR2400601 32: 2024-01-22
54: HAIR TREATMENT COMPOSITION WITH CATIONIC SURFACTANT, FATTY ALCOHOLS, AND LOW POLAR OIL
00: -
Hair treatment compositions and methods for treating hair using the compositions are disclosed. The hair treatment compositions include: (a) one or more cationic surfactants; (b) one or more solid fatty alcohols; (c) one or more liquid fatty alcohols; (d) one or more low polar oils having a Polarity Index of about 23 mN/m to about 40 mN/m; and (e) water; wherein a weight ratio of a combination of (c) and (d) to a combination of (a) and (b) is from about 0.5:1 to about 3:1 (((c)+(d)):((a)+(b))). The hair treatment compositions are particularly useful in methods for detangling, aligning, and smoothing the hair.

21: 2026/02675. 22: 2026/03/09. 43: 2026/10/21
51: E05B
71: ABLOY OY
72: AITTOKOSKI, Pyry, MALINEN, Perttu
33: FI 31: 20236012 32: 2023-09-08
54: DISC TUMBLER CYLINDER LOCK AND KEY COMBINATION
00: -
An invention concerns a disc tumbler cylinder lock (3) and key (2) combination, wherein the disc tumbler cylinder lock (3) comprises rotation limiting means (10) for the key. The rotation limiting means comprise a body (13) having a key profile opening (34), a guiding element (12) connected to the body. The key (2) comprises guiding grooves (21) at both sides of the key in a longitudinal direction of a key shank (2A), and a transversal groove (19), which is transverse in relation to a longitudinal axis of a shank (2A) of the key (2). The rotation limiting means (10) comprises one or two plates (14).

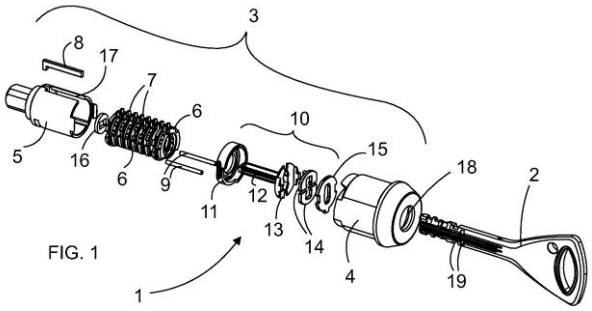

FIG. 1

21: 2026/02718. 22: 2026/03/10. 43: 2026/10/21
51: G06F
71: Shanxi Yuke Technology Development Co., Ltd.
72: Longlong ZHAO, Yuxuan ZHAO, Yuxin ZHAO, Yuke ZHAO
54: CLOUD-BASED INTELLIGENT FUSION ANALYSIS PLATFORM FOR HETEROGENEOUS DATA SOURCES
00: -
Disclosed is a cloud-based intelligent fusion analysis platform for heterogeneous data sources, belonging to the technical field of data processing and cloud computing. The platform adopts a layered cloud-native architecture, including: a resource scheduling layer, used to provide containerized deployment and elastic resource scheduling; a data access layer, connecting to heterogeneous data sources such as relational databases, non-relational databases, APIs, and real-time data streams through various protocol adapters, and equipped with a metadata management center; a fusion service layer, used to perform standardization, entity identification and conflict resolution on original data, and generate a logically consistent unified data view; and an intelligent engine layer, integrated with distributed machine learning and knowledge graph analysis tools to perform in-depth mining and prediction on the unified data view. The present disclosure realizes unified access, intelligent fusion, and elastic cloud-based analysis of heterogeneous data,

effectively solving the problems of difficult data fusion and high analysis thresholds, and improving the automation and intelligence level of data analysis and the efficiency of application construction.

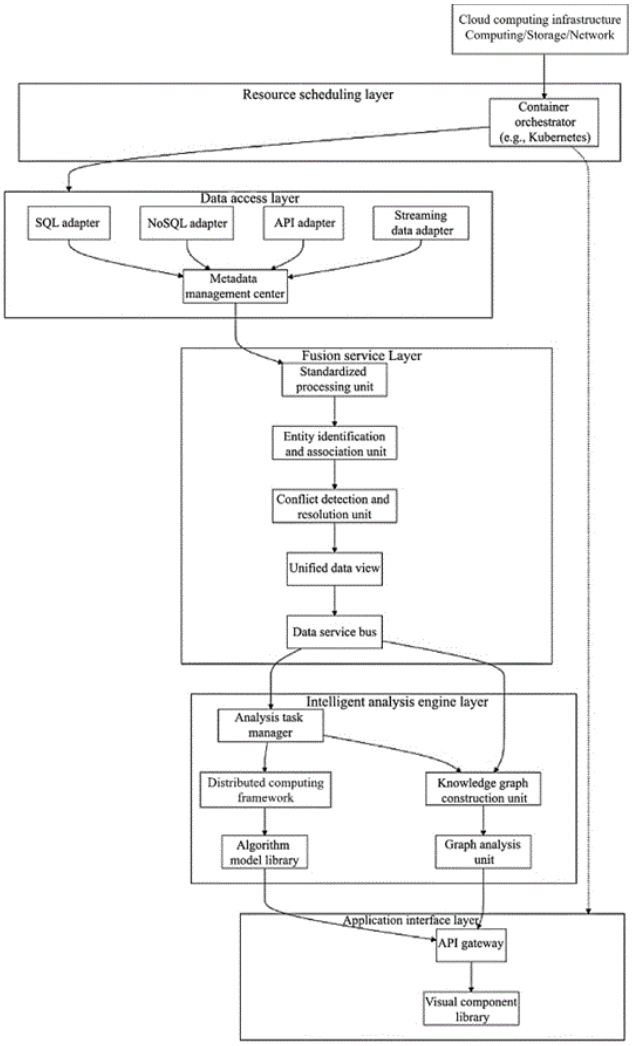

21: 2026/02720. 22: 2026/03/10. 43: 2026/10/21
51: G06T
71: AFFILIATED HOSPITAL OF ZUNYI MEDICAL UNIVERSITY
72: Kui Tu, Dianbei Wang, Zhengjun Zhou

54: HEPATIC VESSEL THREE-DIMENSIONAL RECONSTRUCTION SYSTEM BASED ON IMAGE SEGMENTATION

00: -

A hepatic vessel three-dimensional reconstruction system based on image segmentation, comprising a medical image preprocessing module, a multi-scale adaptive image segmentation module, a vascular topology optimization module, and a three-dimensional visualization and reconstruction engine. The medical image preprocessing module performs noise suppression and intensity normalization on original liver tomographic images, and repairs image artifacts caused by respiratory motion through a pseudo-artifact recognition and compensation mechanism based on a generative adversarial network; the multi-scale adaptive image segmentation module employs a three-dimensional U-Net variant network integrating an attention mechanism and a multi-scale feature pyramid to achieve accurate segmentation of liver parenchyma and vascular structures; the vascular topology optimization module constructs a vascular skeleton graph, introduces a physiological plausibility scoring function, and performs automatic verification and optimization of a vascular network in combination with liver segment anatomical rules.

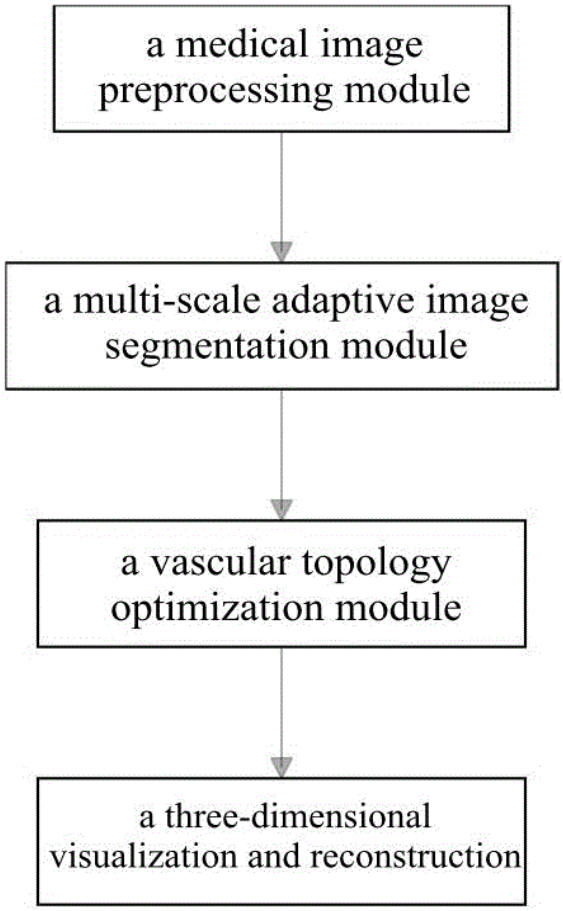

21: 2026/02724. 22: 2026/03/10. 43: 2026/10/21
51: G01V
71: WEST YUNNAN UNIVERSITY OF APPLIED SCIENCES

72: CHEN Yuhan, DENG Yongxin, XIAO Zhuohui

54: SEISMIC RUPTURE DISTRIBUTION INVERSION METHOD WITH INSAR RELATIVE PHASE OBSERVATIONS

00: -

The present invention discloses an InSAR seismic rupture distribution inversion method based on island relative phase observation, including: collecting reference-free InSAR deformation observation data of a target area using a data acquisition device; removing the flat-earth effect and topographic relief influence from the reference-free InSAR deformation observation data of the target area using a data processing device to obtain a mathematical expression of observed values; based on the mathematical expression of observed values, optimizing the InSAR topographic deformation observation equation by acquiring the relative deformation between a reference point and any other point on the island, incorporating the reference-free InSAR relative phase difference of the island as observation data into inversion, taking the integer ambiguity of the InSAR line-of-sight deformation observation of the reference point as an unknown parameter, and solving it with the objective function of nonlinear inversion being the minimum residual of the relative phase difference.

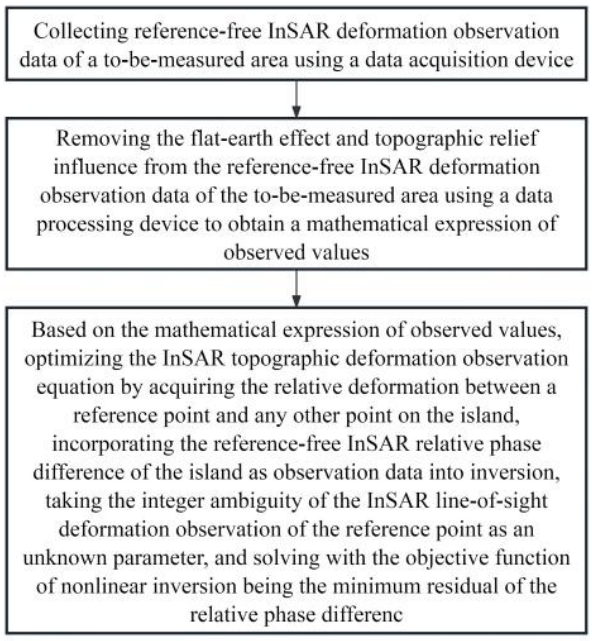

21: 2026/02725. 22: 2026/03/10. 43: 2026/10/21

51: C12N

71: Gansu Agricultural University, Lanzhou Customs Technology Center, Lanzhou Veterinary Research Institute, Chinese Academy of Agricultural Sciences

72: ZHANG, Xiaoxia, XIE, Yingshuang, HE, Jijun, WANG, Bo, ZHANG, Xiangle, GOU, Huitian, LEI, Chunni, JIANG, Yubao, WANG, Xiqiao

54: RPA PRIMER-PROBE SET AND KIT FOR DETECTING PORCINE EPIDEMIC DIARRHEA VIRUS, TRANSMISSIBLE GASTROENTERITIS VIRUS, AND PORCINE DELTACORONAVIRUS, DETECTION METHOD THEREFOR AND APPLICATION THEREOF

00: -

The present invention provides a recombinase polymerase amplification (RPA) primer-probe set and kit for detecting porcine epidemic diarrhea virus, transmissible gastroenteritis virus, and porcine deltacoronavirus, a detection method therefor and an application thereof, belonging to the field of biotechnology. The present invention provides an RPA primer-probe set, including at least one of the following: a primer-probe for detecting porcine epidemic diarrhea virus, a primer-probe for detecting transmissible gastroenteritis virus, and a primer-probe for detecting porcine deltacoronavirus. The RPA primer-probe set provided in the present invention is capable of specifically detecting porcine epidemic diarrhea virus, transmissible gastroenteritis virus, and porcine deltacoronavirus. Results of a fluorescent quantitative RPA detection show that a detection limit ranges from 31.25 copies/microliter to 62.5 copies/microliter, and virus detection may be achieved within 20 minutes without complex equipment, such that the primer-probe set is suitable for grassroots promotion and application.

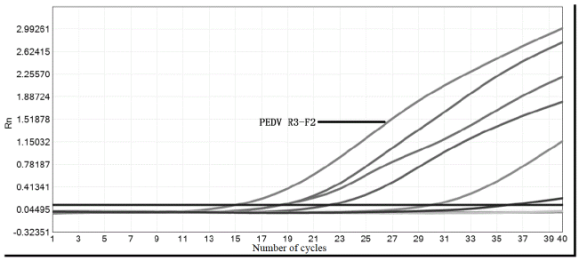

21: 2026/02726. 22: 2026/03/10. 43: 2026/10/21

51: E21C

71: HEIFEI DESIGN AND RESEARCH INSTITUTE OF COAL INDUSTRY CO., LTD., CHINA COAL NO.3 CONSTRUCTION GROUP COMPANY LIMITED, CHINA COAL MINE CONSTRUCTION (ANHUI) TECHNOLOGY CO., LTD.

72: ZHANG, Aiyong

54: SUPPORT COMBINATION STRUCTURE FOR REPLACING BEAM NEST OF TUBE SUPPORTING BEAM IN VERTICAL SHAFT OF POTASH MINE

00: -

A support combination structure for replacing a beam nest of a tube supporting beam in a vertical shaft of a potash mine is provided, including combined tube supporting main beams. The total quantity of the tube supporting main beams is three. The two tube supporting main beams on an upper part such as a first master tube supporting main beam and a second master tube supporting main beam are of combined structures, and are in bolted connection with welding end plates of four vertical support columns by using bolts. The first master tube supporting main beam, the second master tube supporting main beam, and the support columns jointly resist and distribute all pipeline weight and water hammer pressure of the entire shaft. Another shaft bottom tube supporting main beam on a lower part is disposed below a base plate of a shaft bottom ingate, and mainly bears partial stress support for a pipeline to enter and leave the ingate. Tube supporting secondary beams are disposed on top surfaces of the first master tube supporting main beam and the shaft bottom tube supporting main beam. A tube supporting secondary beam base is disposed on a top surface of the tube supporting secondary beam. The tube supporting secondary beam base is configured to fasten and support backfill and drainage pipelines. The first master tube supporting main beam, the second master tube supporting main beam, and the shaft bottom tube supporting main beam are fastened by using support brackets, so as to replace a conventional shaft-reserved beam nest that runs through a shaft wall by means of layered stress distribution. According to the support combination structure for replacing a beam nest of a tube supporting beam in a vertical shaft of a potash mine, by means of a combined effect of the first master tube supporting main beam, the second master tube supporting main beam, the support columns, the shaft bottom tube supporting main beam, support secondary beams, pipeline branch seats, and the like, support and stress distribution under pipeline weight and huge water hammer pressure of the entire shaft are implemented. The structure can effectively solve a problem of a conventional pipeline support main beam in a potash ore vertical shaft that it is necessary to reserve huge beam nests that run through the shaft wall on both sides of the shaft wall, and can avoid structural defects of the shaft wall caused by construction of the beam nests, thereby preventing breakage of the shaft wall and a salt rock corrosion damage caused by water gushing, and improving overall safety of a potash ore shaft.

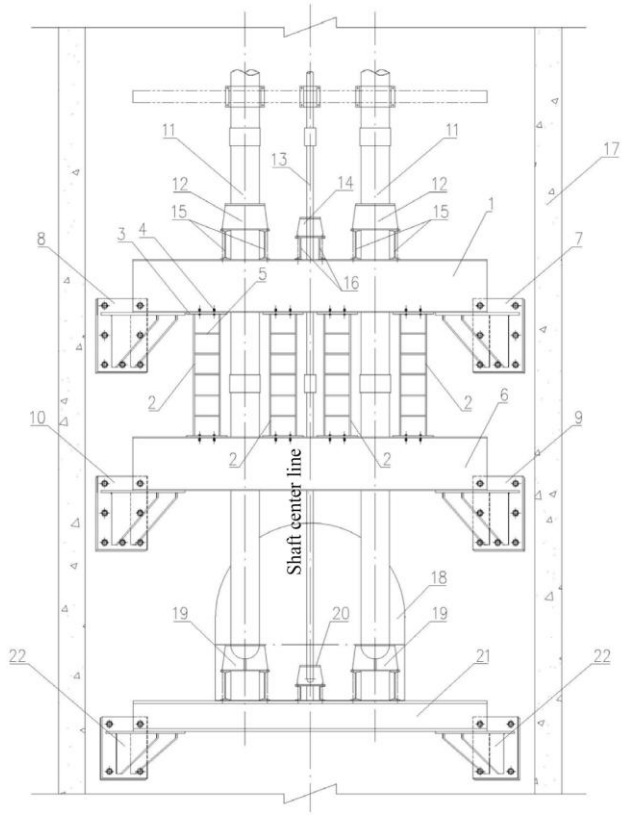

21: 2026/02727. 22: 2026/03/10. 43: 2026/10/21

51: E02D

71: HEIFEI DESIGN AND RESEARCH INSTITUTE OF COAL INDUSTRY CO. , LTD., CHINA COAL NO.3 CONSTRUCTION GROUP COMPANY, CHINA COAL MINE CONSTRUCTION (ANHUI) TECHNOLOGY CO., LTD.

72: LI, Weili, LIU, Zhengchun, GAO, Mingsong

54: WATER LEVEL MONITORING APPARATUS FOR UNDERGROUND PUMP ROOM

00: -

A water level monitoring apparatus for an underground pump room is provided, and relates to the field of water level monitoring technologies for pump rooms. The water level monitoring apparatus

for an underground pump room includes a rectangular block and a water level monitor body. A fixing sleeve is fastened on a top of the water level monitor body. A cavity is formed in an inner side of the rectangular block. A circular slot runs through an inner bottom of the cavity. Two clamping slots are relatively formed in an inner wall of the circular slot. The fixing sleeve cooperates with the circular slot mutually. Two clamping strips are relatively fastened to an outer wall of the fixing sleeve. The clamping strip is in clearance fit with the clamping slot. Two through slots relatively run through an inner bottom of the cavity. A supporting rod is disposed in the through slot. A movable plate is slidably disposed on the supporting rod. A curved plate is fastened to a bottom of the movable plate to cooperate with the water level monitor body. A first spring is connected between the movable plate and an inner wall of the through slot, so as to extrude the movable plate toward the water level monitor body. And then, the curved plate is driven to be clamped at an outer edge of the water level monitor body, so as to achieve a purpose of limiting and fastening the water level monitor body.

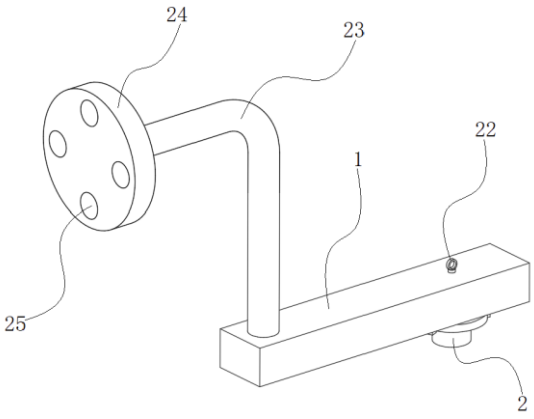

21: 2026/02728. 22: 2026/03/10. 43: 2026/10/21
51: G06F
71: Shandong Jianzhu University
72: SU Beile, ZHANG Zhiwei, ZHANG Lili, LV Xiaoyuan, QIU Ning, HAN Xinyu
33: CN 31: 2026101286812 32: 2026-01-27

54: METHOD AND SYSTEM FOR DYNAMIC PRESENTATION OF LANDSCAPE DESIGN BASED ON VIRTUAL REALITY

00: -

The present invention discloses a method and system for dynamic presentation of landscape design based on virtual reality (VR), comprising the following steps: acquiring real-time environmental data and plant growth cycle information through multi-source sensors, and processing the data and information using a particle filtering algorithm to obtain a preliminary spatiotemporally aligned dynamic dataset; training mutual influence relationships among key feature parameters using a neural network model according to the preliminary spatiotemporally aligned dynamic dataset, and determining a coupling coefficient matrix; obtaining logical rules of environmental interaction from the coupling coefficient matrix, and obtaining an interaction graph containing spatiotemporal consistency; updating dynamic state values of each node through iterative simulation equipment based on the node connection structure in the interaction graph, and obtaining an optimized scene evolution sequence; if data-inconsistent portions exist in the optimized scene evolution sequence, determining a collaborative driving model; generating a rendering data stream for virtual presentation according to the collaborative driving model, and producing continuous landscape dynamic results.

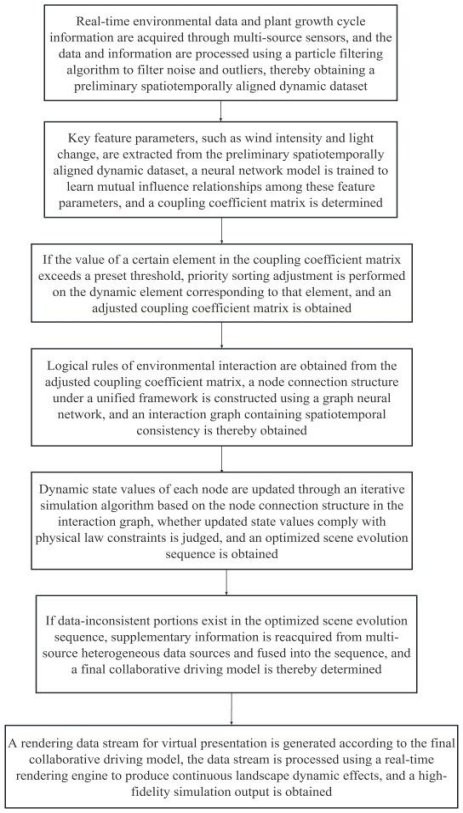

21: 2026/02729. 22: 2026/03/10. 43: 2026/10/21
51: B65G
71: HEIFEI DESIGN AND RESEARCH INSTITUTE OF COAL INDUSTRY CO. , LTD., CHINA COAL NO.3 CONSTRUCTION GROUP COMPANY LIMITED, CHINA COAL MINE CONSTRUCTION (ANHUI) TECHNOLOGY CO., LTD.
72: ZHANG, Aiyong, WANG, Dayu
54: WATERPROOF AND EFFICIENT DUST FALL CLEANING AND CYCLING COMBINED DEVICE FOR POTASH MINE BELT CONVEYOR
00: -
A waterproof and efficient dust fall cleaning and cycling combined device for a potash mine belt conveyor is provided, including underframes. The total quantity of the disposed underframes is two. A cyclic sewage receiving conveyor belt is disposed on tops of the two underframes. A variable frequency motor is fixedly installed on a top of a rear end of the disposed underframe located on one side. A support plate is fixedly connected between the two underframes at a position near a center. An impurity receiving tank is fixedly installed on a top of the support plate. A coarse filter screen is disposed in the impurity receiving tank at a position near a top. A trapezoidal frame is clamped to a top of the impurity receiving tank. According to the waterproof and efficient dust fall cleaning and cycling combined device for a potash mine belt conveyor, by means of a combined effect of a water tank, a water pump, a water collection bucket, a first spray head, and a second spray head, continuous spraying of floating materials above an upper potash ore conveyor belt is implemented, thereby effectively atomizing and adhering materials and reducing flying dust. Sewage is continuously and cyclically collected by using the cyclic sewage receiving conveyor belt. This mechanism significantly reduces a dust concentration in an operation area, and the cyclic sewage receiving conveyor belt effectively isolates spray water from making contact with potash ore on the belt conveyor, so that continuous conveying of the potash ore is not affected, and air quality can be significantly improved, and a risk that a worker suffers from occupational diseases due to dust inhalation is reduced.

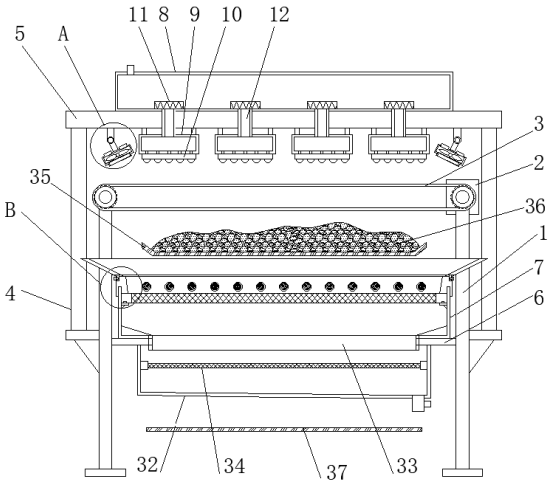

21: 2026/02730. 22: 2026/03/10. 43: 2026/10/21
51: G06F
71: GUIZHOU YOUPIN SLEEP HEALTH INDUSTRY CO., LTD.
72: YANG, Dingguang, LIU, Enping, TIAN, Yan, LIU, Sujun, LIN, Yongming
54: BREADTH DATA COLLECTION METHOD
00: -
The present invention discloses a breadth data collection method, and relates to the technical field of data collection. The breadth data collection method includes: automatically matching an access protocol according to a type of data source, establishing a connection, and parsing the data into a unified intermediate data format; constructing a dynamic weight evaluation model to adaptively adjust a data collection sequence and a transmission strategy; preprocessing multi-dimensional data in the unified intermediate data format; extracting feature vectors of the preprocessed multi-dimensional data and integrating the feature vectors into a unified feature vector through weighted fusion; calculating a comprehensive quality score of the collected data based on preset quality evaluation metrics combined with the unified feature vector, thereby achieving closed-loop optimization of the collection strategy. The present invention enables adaptive access and unified parsing of data sources, improves collection efficiency and resource utilization through dynamic adjustment of the collection strategy, and ensures reliability of the collected data through a data quality closed-loop feedback mechanism. The present

invention is applicable to breadth data collection in multi-source heterogeneous scenarios.

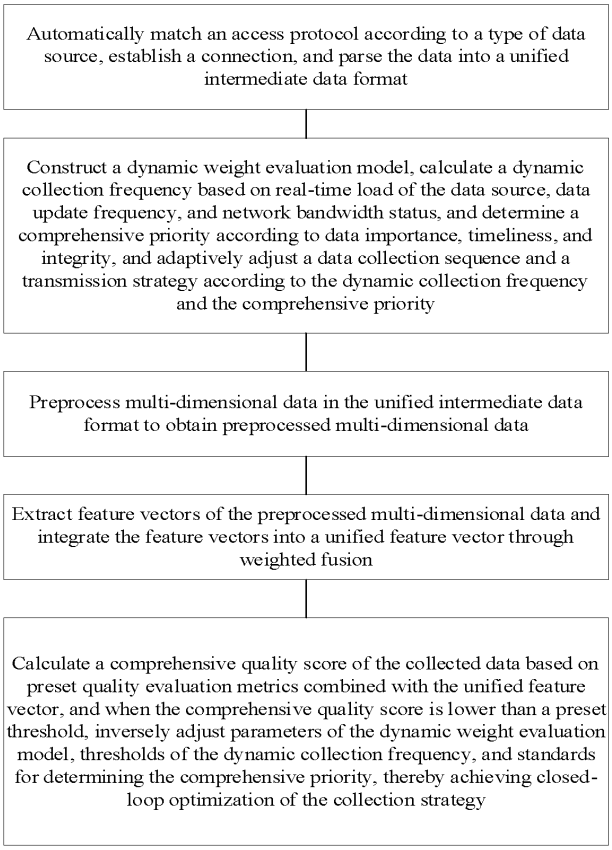

21: 2026/02731. 22: 2026/03/10. 43: 2026/10/21
51: G06T
71: GUIZHOU YOUPIN SLEEP HEALTH INDUSTRY CO., LTD.
72: LIU, Sujun, LIU, Enping, WANG, shengxiang, TANG, fei

54: INTELLIGENT ISOLATED DYNAMIC HARDWARE PARTITIONING SYSTEM FOR CLOUD SERVERS

00: -

The present invention discloses an intelligent isolated dynamic hardware partitioning system for cloud servers, and relates to the technical field of cloud computing hardware resources. The system includes a processor core, a distributed virtual memory intermediary layer, an interrupt intermediary layer, a load awareness module, a partition trusted root component, a shared resource scheduler, a system address mapping module, and a partition collaboration interface. The elastic scaling of partitioned resources is achieved through the load awareness module and a dynamic adjustment protocol to adapt to dynamic changes of business loads, and the high-efficiency scheduling and authorization collaboration on the basis of isolation are implemented through the shared resource scheduler and the partition collaboration interface, thereby improving resource utilization and significantly enhancing management efficiency of cloud server hardware resources and adaptability to application scenarios.

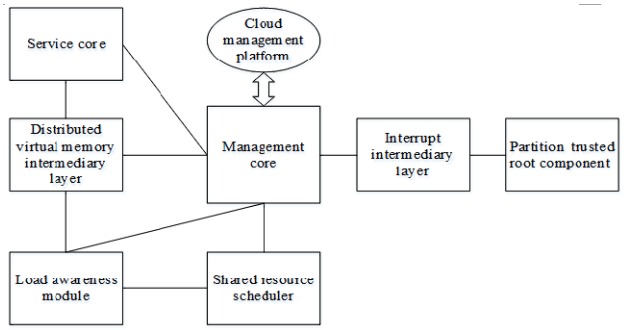

21: 2026/02732. 22: 2026/03/10. 43: 2026/10/21
51: B66B
71: GUIZHOU YOUPIN SLEEP HEALTH INDUSTRY CO., LTD.
72: LIU, Sujun, LIU, Enping, WANG, Shengxiang, TANG, Fei

54: INTELLIGENT ENERGY LOSS CALCULATION METHOD AND COMPENSATION APPARATUS THEREOF

00: -

The present invention discloses an intelligent energy loss calculation method and a compensation apparatus thereof, and relates to the technical field of the Internet of Things. The method includes: acquiring energy network basic data, multidimensional dynamic influencing data, and energy type parameters of a to-be-calculated region; standardizing the energy network basic data and constructing a standardized energy network structure diagram based on energy types; calculating an energy loss value of the to-be-calculated region based on the standardized energy network structure diagram, the multidimensional dynamic influencing data, and a preset dynamic loss calculation model; and generating and outputting a loss compensation strategy according to the energy loss value. The present invention achieves multi-energy adaptation by constructing an energy type parameter database, introduces a dynamic loss coefficient model to improve calculation accuracy,

and combines anomaly diagnosis with a compensation strategy to extend functional value, thereby achieving full-process energy loss precise calculation, anomaly diagnosis, and effective compensation, and significantly improving the intelligence level and practical application value of energy loss management.

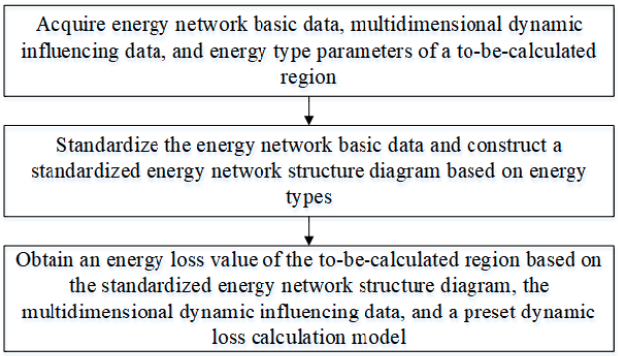

21: 2026/02733. 22: 2026/03/10. 43: 2026/10/21
51: B60W; G06V
71: ZHEJIANG UNIVERSITY OF SCIENCE AND TECHNOLOGY, "HANGZHOU MUCHUANG INTELLIGENT TECHNOLOGY CO., LTD "
72: ZHANG, Zhang, HU, Bingyang
33: CN 31: 2026102020375 32: 2026-02-11
54: MACHINE VISION-BASED INTELLIGENT WAREHOUSING MULTI-VEHICLE AUTONOMOUS DRIVING COLLABORATIVE DECISION-MAKING SYSTEM AND METHOD
00: -
The present invention discloses a machine vision-based intelligent warehousing multi-vehicle autonomous driving collaborative decision-making system and method, relating to the technical field of intelligent warehousing and automated logistics. A multi-vision perception module, a collaborative decision-making module, an onboard execution module, and a warehousing environment mapping module that are connected in sequence are comprised. The present invention constructs a multi-dimensional machine vision perception system, integrates perception resources of an onboard binocular RGB-D camera, a shelf-end vision sensor, and an aisle-side panoramic camera, and achieves comprehensive perception of multiple elements such as vehicles, slots, cargo, and aisles in a warehousing environment. Compared with an existing single vision or laser positioning solution, the multi-dimensional machine vision perception system has more comprehensive perception range and stronger dynamic adaptability, and can effectively address dynamic changes in the warehousing environment.

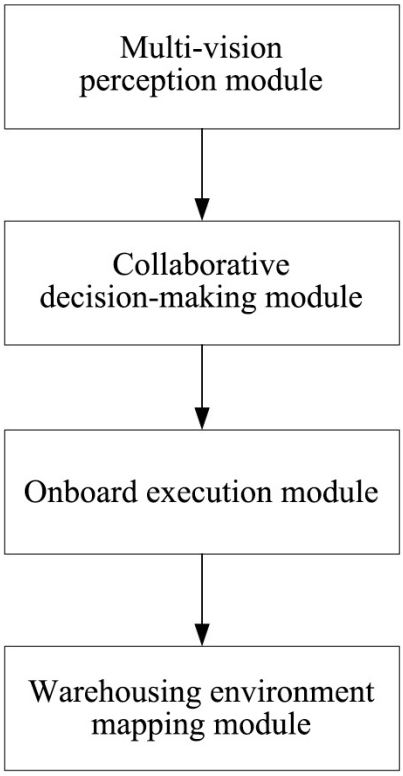

21: 2026/02734. 22: 2026/03/10. 43: 2026/10/21
51: G05B
71: ZHENGZHOUUNIVERSITY
72: LU, Shuxiang, YANG, Jie, GU, Xiaofei
54: PASSIVE DETECTION CONTROL SYSTEM FOR FUEL ROD ENRICHMENT BASED ON INTELLIGENT OPTIMIZATION
00: -
The present invention relates to a passive detection control system for fuel rod enrichment based on intelligent optimization, comprising: a detector array with signals being connected to amplifiers, outputs of the amplifiers being connected to a pulse amplitude analyser, an output of the pulse amplitude analyser being connected to a data acquisition card, and the pulse amplitude analyser transmitting energy spectrum data to a software system; an intelligent optimization module integrating three types of correction units and bidirectionally linked with the software system, a multi-channel high/bias-voltage power supply and control system being connected to the array and the software system to achieve drift

compensation and gain calibration, and the software system being responsible for data processing and instruction issuing. This solves the problem of energy spectrum drift in a detection device after long-term operation, effectively improves detection accuracy, and reduces system calibration frequency. High-precision and high-stability detection of fuel rod enrichment is achieved by integrating energy spectrum drift compensation, automatic calibration of the detector array, intelligent identification of nuclear pulse peaks, and pellet age correction technologies.

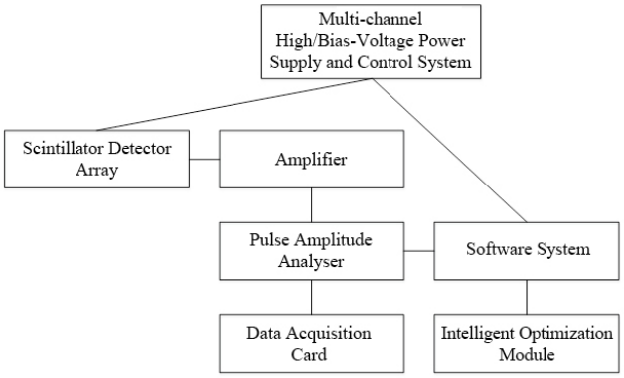

21: 2026/02735. 22: 2026/03/10. 43: 2026/10/21
51: A01K
71: INSTITUTE OF POULTRY SCIENCE, SHANDONG ACADEMY OF AGRICULTURAL SCIENCES, SHANDONG BLUE HORIZON ECOLOGICAL AGRICULTURE CO.LTD
72: LI, Fuwei, LIU, Wei, HAN, Haixia, LIU, Jie, LI, Dapeng, WANG, Jie, SUN, Yan, HAO, Dan, PENG, Haiqing, LEI, Qiuxia, ZHOU, Yan, CAO, Dingguo, LIU, Yameng, WANG, Yunchao, ZHU, Yingbo

54: POULTRY HOUSE COMPRISING HEATING STRUCTURE

00: -

The present invention discloses a poultry house comprising a heating structure, relating to the technical field of breeding. The poultry house comprises a heating house and a heating structure, the heating structure comprises a heat supply device and a heat dissipation device, and the heat supply device and the heat dissipation device are respectively disposed outside and inside the heating house; the heat dissipation device comprises floor heating, water heating, and air heating, the floor heating comprises a floor heating pipe disposed below a floor of the heating house, the water heating comprises a warm water pipe disposed below poultry cages of the heating house, and the air heating comprises radiators disposed on an outer side of a wall of the heating house; the heat supply device comprises a boiler, the floor heating pipe, the warm water pipe, and the radiators are respectively connected to the boiler through pipelines, and the boiler is used for conveying hot water to insides of the floor heating pipe, the warm water pipe, and the radiators. The poultry house comprising a heating structure provided by the present invention has scientific and reasonable design, excellent heating effects, and uniform heat, and is energy saving.

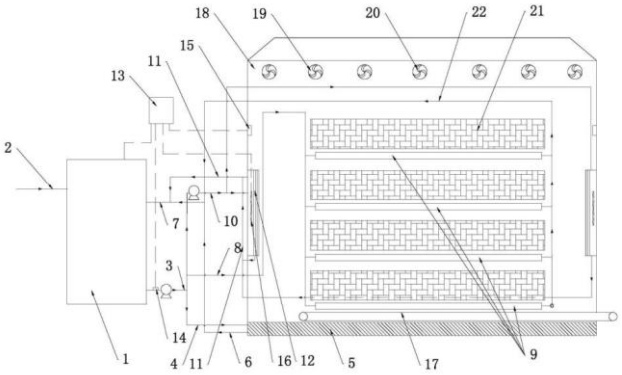

21: 2026/02736. 22: 2026/03/10. 43: 2026/10/21
51: A61B
71: SHANGHAI HUAXIU INDUSTRIAL GROUP CO., LTD.
72: CUI, Hairu

54: SKIN ANTI-AGEING TREATMENT METHOD USING HYDRODISSECTION AND DETECTION SYSTEM

00: -

The present invention discloses a skin anti-ageing treatment method using hydrodissection and a detection system, and belongs to the technical field of skin anti-ageing. The method comprises: firstly, collecting ageing degree information of a plurality of detection positions on facial skin; selecting at least one of the detection positions as a skin age restoration position according to the ageing degree information; and injecting a composite nutrient agent into a subcutaneous region from the skin age restoration position. The present invention utilises a "hydrodissection" effect to enable the injected composite nutrient agent to automatically bypass blood vessels and nerves in the subcutaneous region. This activates the skin's self-repair capability and stimulates significant collagen tissue proliferation, thereby increasing the thickness of

subcutaneous tissue and rendering the skin denser and firmer. Additionally, rich nutrients contained in the composite nutrient agent can replenish those lost in depressed skin areas, significantly plumping, smoothing, firming, and lifting the skin.

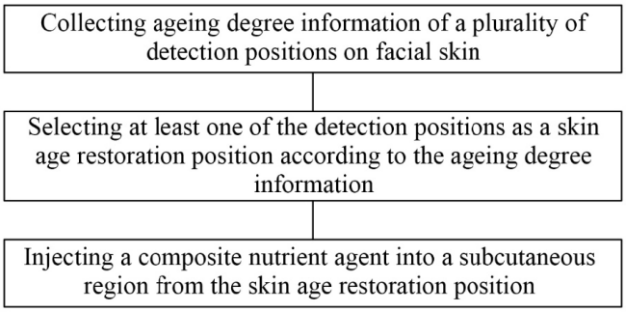

21: 2026/02742. 22: 2026/03/10. 43: 2026/10/21
51: H04L
71: VISHWAKARMA INSTITUTE OF TECHNOLOGY
72: CHAUDHARI, Prasad, CHAVHAN, Pranali, JAGTAP, Gaurav Yuvraj, KAVHAT, Narendra Rajendra, KHANDARE, Harshdeep Baburao, KONDHAWALE, Aditya Eknath

54: A CLOUD-BASED INTEGRATED ENVIRONMENTAL MONITORING SYSTEM

00: -

The present invention is related to a cloud-based integrated environmental monitoring system. This invention presents an all-in-one IoT environmental monitoring system built around an ESP32 microcontroller with a built-in web server that hosts a real-time HTML dashboard. It gathers data from multiple sensors measuring temperature, humidity, air quality, and light intensity. Unlike typical setups that rely on external cloud services, this system serves an interactive web interface directly from the ESP32, allowing users to view live data, track historical trends, and export data easily. With efficient power management for long battery life and a modular design for easy sensor addition, this affordable system is ideal for applications in agriculture, building management, environmental research, and educational use.

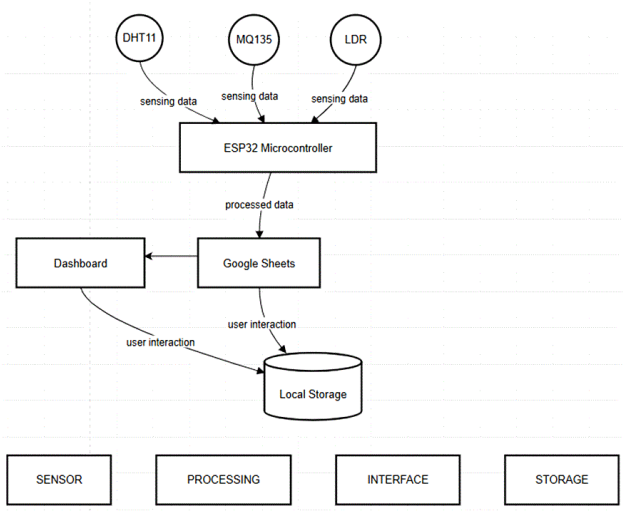

21: 2026/02743. 22: 2026/03/10. 43: 2026/10/21
51: G08B
71: VISHWAKARMA INSTITUTE OF TECHNOLOGY
72: KALSHETTI, Sarita Sanjay, AMBHORE, Pruthviraj Arun, INGLE, Samar Rajesh, INGALE, Indranil Maheshkumar, CHAUDHARI, Prasad, SURYAWANSHI, Amol Shivajirao, PATIL, Vivek

54: A GAS LEAKAGE AND HUMAN OCCUPANCY DETECTION SYSTEM FOR ENHANCED SAFETY

00: -

The present invention is related to a gas leakage and human occupancy detection system for enhanced safety. The invention presents a smart IoT-based gas and occupancy detection system that enhances safety by integrating gas leakage detection and human presence monitoring. Using a dual-stage detection mechanism, it sends instant IoT alerts, activates alarms, and can control appliances. The system minimizes false alarms and provides data-driven safety management for homes and industries.

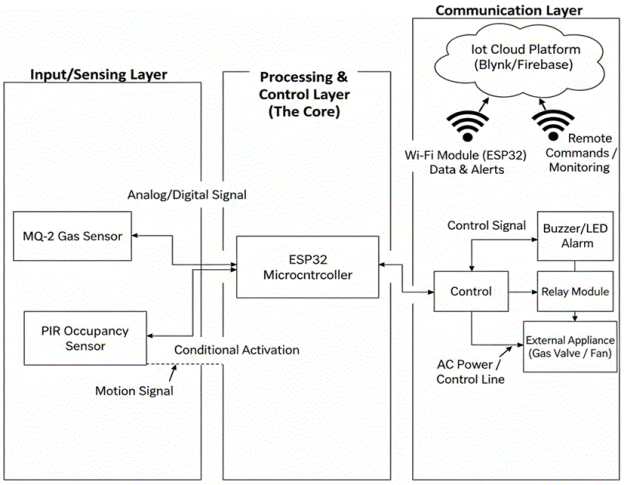

21: 2026/02744. 22: 2026/03/10. 43: 2026/10/21
51: G08B
71: VISHWAKARMA INSTITUTE OF TECHNOLOGY
72: AGRAWAL, Sanjana Sunil, SINGH, Ayush Lokesh, BADADALE, Arya Anand, BIJWE, Aditya Manish, CHAUDHARI, Prasad Bhata, SURYAWANSHI, Amol, CHAVHAN, Pranali

54: AN IOT-BASED INDOOR OCCUPANCY DETECTION AND ANALYTICS SYSTEM

00: -

The present invention is related to an IoT-based indoor occupancy detection and analytics system. The invention is designed to monitor and analyze human presence in enclosed spaces such as classrooms, offices, and laboratories. The system utilizes PIR sensors and ultrasonic/IR sensors to detect both moving and stationary occupants, ensuring accurate occupancy detection while maintaining user privacy. An ESP32 or ESP8266 microcontroller processes sensor signals in real time, and the collected data is analyzed to generate insights on space utilization, peak occupancy, and energy optimization. The system is low-cost, scalable, and adaptable to multiple rooms or zones, offering a practical solution for smart building management and energy-efficient automation.

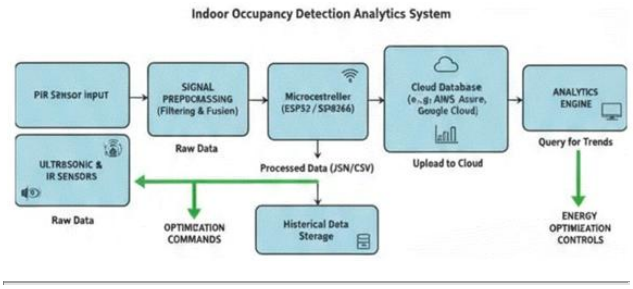

21: 2026/02745. 22: 2026/03/10. 43: 2026/10/21
51: E05B
71: VISHWAKARMA INSTITUTE OF TECHNOLOGY
72: KATTI, Rohan Rajesh, KALE, Atharva Ramesh, KANDEKAR, Snehal Pappu, CHAUDHARI, Prasad, CHAVHAN, Pranali

54: A DOOR LOCK SYSTEM USING ESP32 WITH OFFLINE TIME-BASED OTP VERIFICATION

00: -

The present invention is related to a door lock system using ESP32 with offline time-based OTP verification. The invention relates to an offline smart door lock system that operates using a Time-Based One-Time Password (TOTP) mechanism without requiring continuous internet connectivity. The system utilizes an ESP32 microcontroller, a 4×4 matrix keypad, a 16×2 I2C LCD display, and a servo motor to achieve secure and automated door access. A shared secret key between the ESP32 and a mobile application allows both devices to independently generate identical OTPs every 30 seconds. The user enters the OTP displayed on the mobile app through the keypad, and the ESP32 verifies it against its internally generated OTP. Upon successful verification, the servo motor rotates to unlock the door and automatically returns to the locked position after a delay. This innovation provides a low-cost, energy-efficient, and fully offline smart locking solution that enhances both security and reliability compared to traditional internet-dependent systems.

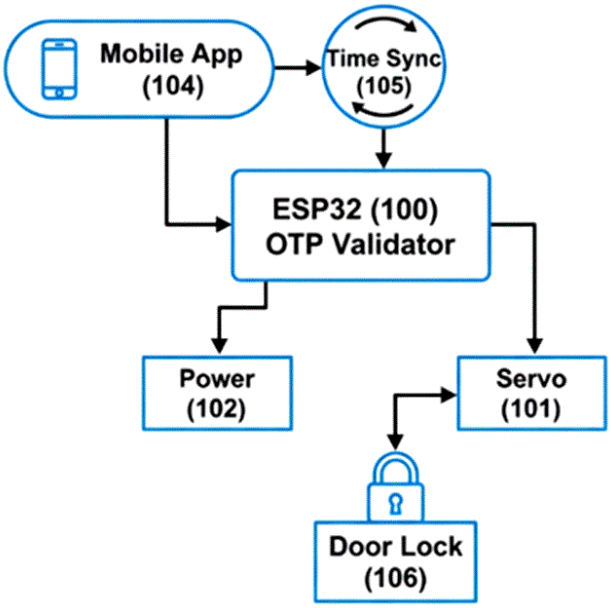

21: 2026/02746. 22: 2026/03/10. 43: 2026/10/21
51: G08B
71: VISHWAKARMA INSTITUTE OF TECHNOLOGY
72: KOUL, Palash, HIROLIKAR, Ojas Sandeep, PALOD, Raghav Shivdayal, PAWAR, Trunal Hanumant, CHAUDHARI, Prasad B., SHARMA, Nakul Satpaul, SHELKE, Priya, MATE, Anuja D., CHAVHAN, Pranali G

54: AN IOT-BASED SMART DROWSINESS DETECTION AND VEHICLE SAFETY SYSTEM

00: -

The present invention is related to an IoT-based smart drowsiness detection and vehicle safety system. A webcam continuously monitors the driver's face to detect fatigue via Eye and Mouth Aspect Ratios and head tilt angles. Upon detecting drowsiness, the Python module sends a serial command to an Arduino microcontroller, which activates visual and audible alerts, cuts motor power via relay, logs the event to ThingSpeak Cloud, and sends a WhatsApp alert with timestamp and geolocation. The system ensures immediate driver response, automatic vehicle safety control, and remote emergency awareness.

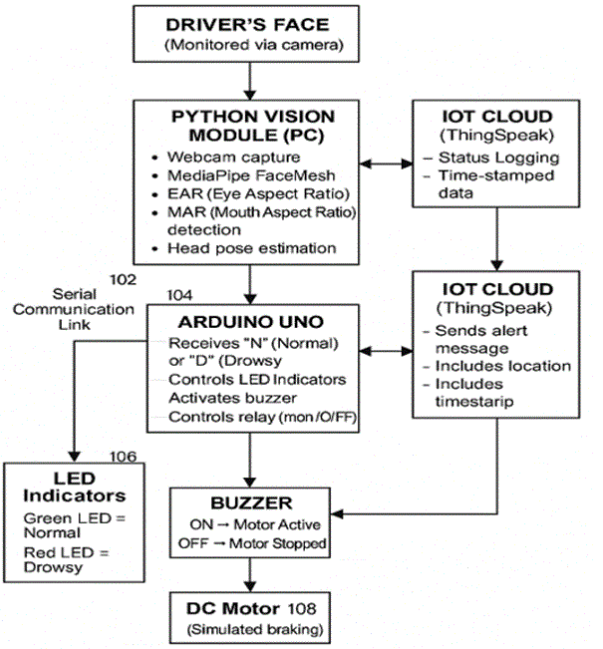

21: 2026/02747. 22: 2026/03/10. 43: 2026/10/21
51: G01N
71: VISHWAKARMA INSTITUTE OF TECHNOLOGY
72: BHALERAO. Ayush Mangesh, BHOYAR, Hemant Chandu, CHAVADE, Aditya Balasaheb, CHAVAN, Rahul Dhanaji, CHAUDHARI, Prasad Bhata, SURYAWANSHI, Amol Shivajirao

54: AN IOT-BASED REAL-TIME WATER QUALITY MONITORING AND ALERT SYSTEM

00: -

The present invention is related to an IoT-based real-time water quality monitoring and alert system. The system integrates multiple sensors—pH, turbidity, temperature, and total dissolved solids (TDS)—with a NodeMCU (ESP8266) microcontroller for data acquisition, processing, and wireless communication. The collected data is transmitted via Wi-Fi to cloud platforms such as ThingSpeak and Blynk, where it is stored, analyzed, and visualized through graphical dashboards. When any water quality parameter exceeds the predefined safety threshold, the system automatically sends alerts to users, enabling prompt corrective action. The invention provides a low-cost, energy-efficient, and scalable solution for continuous monitoring in domestic, industrial, municipal, agricultural, and environmental applications, ensuring sustainable and safe water management.

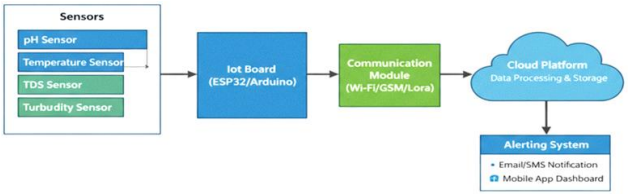

21: 2026/02748. 22: 2026/03/10. 43: 2026/10/21
51: G06F
71: VISHWAKARMA INSTITUTE OF TECHNOLOGY
72: MAHALAXME, Anish Mangesh, MAHAJAN, Arnav Kishor, DHAGE, Mayank Prashant, MORE, Pranav Sahebrao, SURYAWANSHI, Amol, CHAUDHARI, Prasad, CHAVHAN, Pranali

54: AN IOT-ENABLED VIEWER PROXIMITY DETECTION AND AUTOMATIC DISPLAY CONTROL SYSTEM FOR EYE STRAIN PREVENTION IN CHILDREN

00: -

The present invention is related to an IoT-enabled viewer proximity detection and automatic display control system for eye strain prevention in children. The invention presents an IoT-based system that protects children from eye strain by automatically turning off or controlling display devices based on viewer proximity and AI-driven age estimation. By distinguishing between child and adult users, the system ensures targeted safety interventions while maintaining usability for adult viewers. The system supports implementations using mobile device cameras, cloud-based AI services, and ultrasonic sensors to measure proximity in varied environments.

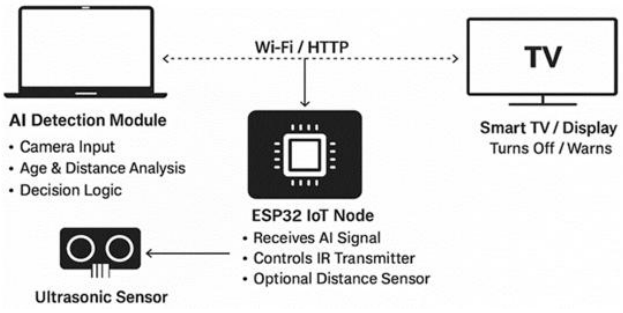

21: 2026/02749. 22: 2026/03/10. 43: 2026/10/21
51: G06F
71: VISHWAKARMA INSTITUTE OF TECHNOLOGY
72: GORE, Shweta, INAMDAR, Adi, GONGE, Shalin, BANEKAR, Rushi, CHAUDHARI, Prasad B., SURYAWANSHI, Amol

54: AN IOT-BASED FARM PROTECTION AND AUTOMATION SYSTEM

00: -

The present invention is related to an IoT-based farm protection and automation system. The system is an IoT-based integrated farm automation solution that performs smart irrigation, environmental monitoring, and intrusion detection. It utilizes an ESP8266 NodeMCU microcontroller with connected sensors – DHT11 (temperature/humidity), Soil Moisture, PIR Motion, Ultrasonic radar (mounted on servo), and Relay-controlled water pump. The system hosts a web server that displays real-time data accessible through any Wi-Fi-enabled device. If Wi-Fi connectivity fails, the device automatically switches to hotspot mode for local control. This system provides 24/7 monitoring, efficient water usage, and security alerts, enhancing productivity and sustainability for farmers.

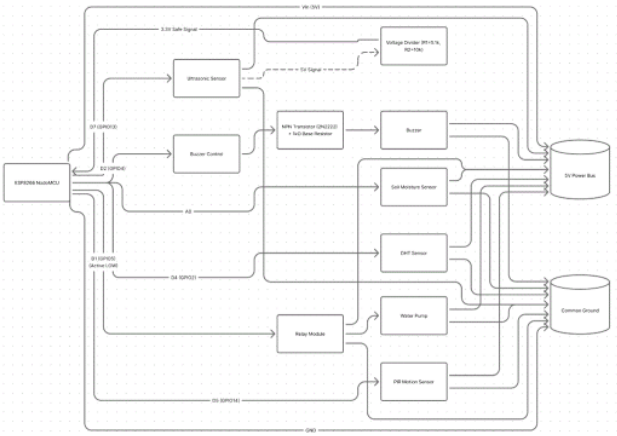

21: 2026/02750. 22: 2026/03/10. 43: 2026/10/21
51: B63B
71: VISHWAKARMA INSTITUTE OF TECHNOLOGY
72: LAD, Prem Navin, LOHAR, Dhruv Madanlal, MALI, Purva Amarnath, MAKODE, Anushka Shyam, CHAUDHARI, Prasad, CHAVHAN, Pranali

54: AN IOT-ENABLED FLOATING BUOY FOR REAL-TIME DETECTION AND MONITORING OF MICROPLASTICS IN WATER

00: -

The present invention is related to an IoT-enabled floating buoy for real-time detection and monitoring of microplastics in water. The invention provides a microplastic-sensing IoT buoy that enables real-time detection and monitoring of microplastic contamination in aquatic environments. Using optical

sensing (LEDs and photodiodes/turbidity sensors), the buoy detects light attenuation and scattering patterns caused by microplastic particles. An ESP32 microcontroller processes the data and transmits results wirelessly via Wi-Fi or LoRa to a cloud dashboard. Powered by a solar-charged rechargeable battery and enclosed in a waterproof floating body, the device enables long-term autonomous deployment. This invention delivers a low-cost, scalable, and autonomous solution for continuous monitoring, overcoming the limitations of laboratory-based techniques, with strong applicability in environmental protection, research, industry, and smart city water management systems.



21: 2026/02751. 22: 2026/03/10. 43: 2026/10/21
51: G06Q
71: VISHWAKARMA INSTITUTE OF TECHNOLOGY
72: KODE, Pratham Parag, GOJE, Nayan Balaji, SONAWANE, Swayam Sandeep, PATHAN, Saad Ansar, CHAUDHARI, Prasad, SURYAWANSHI, Amol

54: AN IOT-BASED PARKING SYSTEM WITH REAL-TIME SLOT DETECTION AND INTELLIGENT RESERVATION MANAGEMENT

00: -

The present invention is related to an IoT-based parking system with real-time slot detection and intelligent reservation management. The invention is an IoT-enabled smart parking system capable of real-time slot occupancy detection and automated billing, accessible through a QR-code based web application. The system comprises: ultrasonic sensors deployed in parking slots; ESP32 microcontroller units connected to said sensors and adapted to transmit slot status via Wi-Fi to a Supabase cloud backend; and a Next.js web application configured to display availability maps, initiate billing sessions upon occupancy detection, and process cashless payments. An administrator dashboard within the web app provides real-time monitoring, usage statistics, billing logs, and analytics. The novelty lies in combining low-cost ESP32 sensing, cloud-native Supabase synchronization, and app-free QR-code access into a single modular platform, adaptable to varied deployment environments such as malls, campuses, and smart city infrastructures.

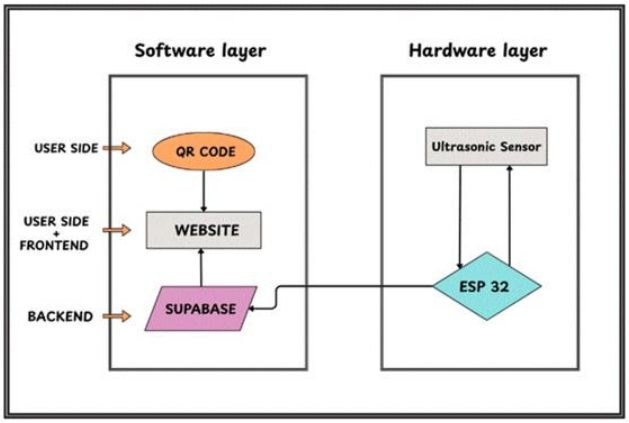

21: 2026/02763. 22: 2026/03/10. 43: 2026/10/16
51: B65B
71: CHAIRMAN, DEFENCE RESEARCH & DEVELOPMENT ORGANISATION (DRDO)
72: GHOSE, Bikash, SANE, Anirudha, KUMAR, Ajeet, ANSARI, Mohammed Siddique, PUNDALE, Sriniwas Shankar, KANKANE, Devendra Kumar, KROTHAPALLI, Prabhakara Subrahmanya Murthy
33: IN 31: 202311054550 32: 2023-08-14

54: A SYSTEM FOR AUTOMATED LAYERING AND FILLING OF MULTIPLE GRAINS AND ASSEMBLY IN A CONFINED REGION AND A METHOD THEREOF

00: -

Embodiments relate to a system and a method to facilitate automated control for filling, assembly and integration of Charge Module, CM, with all the safety and operational interlocks, especially dispensing layers of pallets in a vertically aligned manner in quick succession to build a stack of layers of pallets, wherein the number of grains dispensed in each layer can be decided at the design stage or controlled through a flapper during operation.

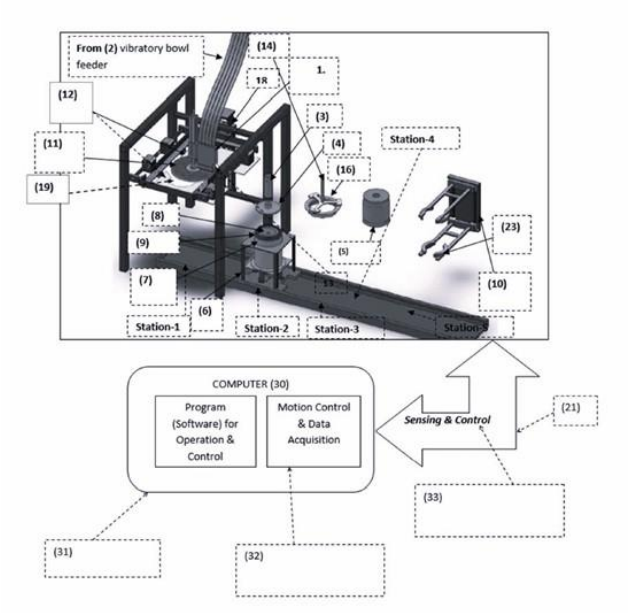

21: 2026/02771. 22: 2026/03/10. 43: 2026/10/22
51: G01V
71: VISHWAKARMA INSTITUTE OF TECHNOLOGY
72: PATIL, Kundan Sachin, SURVE, Omkar Baliram, NALEGAONKAR, Prathmesh Gajanan, PANDARKAR, Shivprasad Bhaskar, CHAUDHARI, Prasad Bhata, CHAVHAN, Pranali Gajanan

54: AN IOT-ENABLED GEOPHONE-BASED SEISMIC DETECTION AND ALERT SYSTEM

00: -

The present invention is related to an IoT-enabled geophone-based seismic detection and alert system. The invention presents an IoT-enabled vibration monitoring and alert system employing underground soil-coupled geophone sensors. Each node performs on-board preprocessing through band-pass filtering and feature extraction, transmitting data wirelessly to an edge gateway. The gateway executes an adaptive signal-analysis and consensus-based decision algorithm that validates vibration events only when multiple nodes detect correlated patterns within defined spatial (= 50 m) and temporal (= 500 MS) limits, thereby minimizing false alarms. The adaptive algorithm continuously adjusts detection thresholds using a 24-hour baseline updated every six hours via an exponential moving average to compensate for environmental drift. Validated events are transmitted to cloud dashboards and communicated in real time through SMS or email. Powered by a hybrid solar–vibration energy subsystem, the system operates continuously without external maintenance. This invention provides a low-cost, scalable, and energy-efficient solution for reliable vibration monitoring in industrial, environmental, and infrastructural domains.

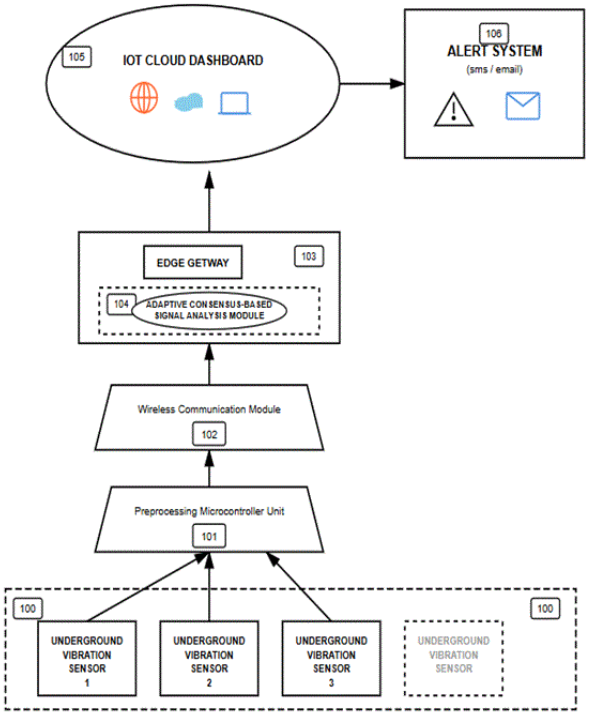

21: 2026/02772. 22: 2026/03/10. 43: 2026/10/22
51: G06F
71: VISHWAKARMA INSTITUTE OF TECHNOLOGY
72: CHAUDHARI, Prasad Bhata, BALSARAF, Soham, BAWANKAR, Shardul, BHATE, Om, BUVA, Utkarsh, SURYAWANSHI, Amol, CHAVHAN, Pranali G

54: A GESTURE BASED LOCKING SYSTEM FOR AUTHENTICATION OF ELECTRONIC DEVICES

00: -

The present invention is related to a gesture based locking system for authentication of electronic devices. The invention provides a gesture-based authentication mechanism where users draw custom free-form gestures to unlock an electronic device. The system captures and normalizes gesture input, compares it using a tolerance-based matching algorithm, and stores gesture templates securely in encrypted form. The method provides enhanced usability, smudge resistance, and high security without requiring specialized biometric hardware. It is applicable across a wide range of electronic and IoT devices.

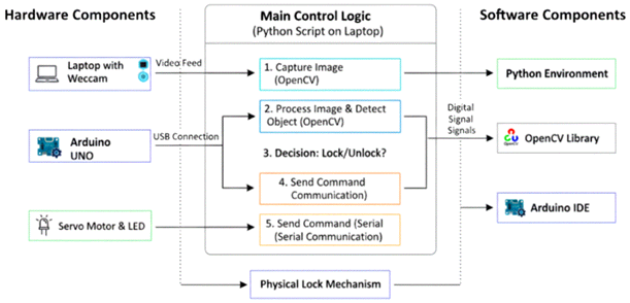

21: 2026/02773. 22: 2026/03/10. 43: 2026/10/22
51: H04L
71: Zhengzhou University of Aeronautics
72: Yang Xiping

54: RANDOM DATA GENERATION METHOD AND SYSTEM FOR MATHEMATICAL STATISTICS

00: -

The present invention relates to the field of mathematical statistics and provides a random data generation method and system for mathematical statistics. The present invention is suitable for simulation tests in social mathematical statistics. Prior to deploying a statistical survey, potential outcomes of a statistical scheme are simulated through random data generation. This is achieved by reading random noise data from randomly sampled objects and performing value mapping thereon. Consequently, the method and system can replace the high logical predictability inherent in program-generated random numbers, enhance the randomness characteristics of the obtained random numbers, and endow the final statistical results with more effective randomness expression.

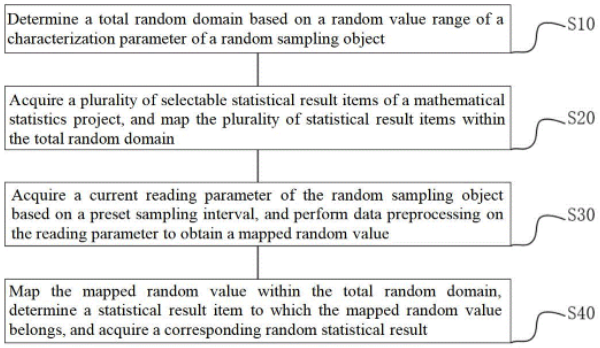

21: 2026/02774. 22: 2026/03/11. 43: 2026/10/22
51: G06F
71: Guangdong Zhongke Energy Storage Development Co., Ltd.
72: Guohui He

54: INTELLIGENT ZONING - CONTROLLED BIPV CURTAIN WALL COMPREHENSIVE UTILIZATION SYSTEM

00: -

The present invention discloses an intelligent zoned - controlled BIPV curtain - wall comprehensive utilization system, which relates to the technical field of BIPV curtain - walls. In this system, a multi - dimensional sensing module is set up. Temperature - humidity, heat - flow and differential thermocouple sensor groups are arranged in each curtain - wall area. Through a high - frequency data collection cycle of 5 - second level, continuous monitoring of condensation sensing data is achieved. Meanwhile, in the central control system, the central control processing module conducts synchronous alignment, abnormal data elimination and dimensionless normalization on the collected data. In combination with the feature extraction unit, it calculates the humidity fluctuation range (delta)RH and heat - flux offset (delta)Q to form a standardized data set, and further calculates and outputs the dew - point temperature Tdp of each zone. This process realizes accurate data modeling of the air state at the zonal level of the BIPV curtain - wall and the construction of a basis for trend identification, providing high - timeliness and high - precision data support for subsequent condensation potential analysis and response control.

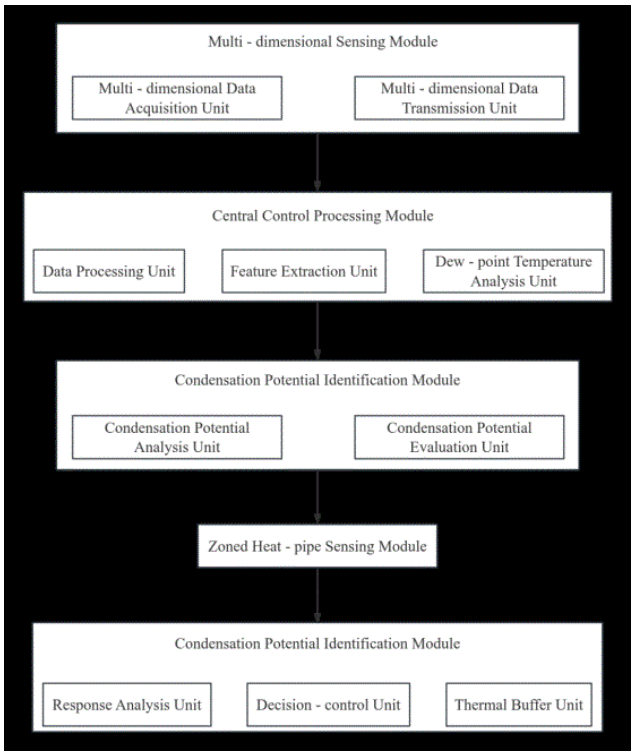

21: 2026/02775. 22: 2026/03/11. 43: 2026/10/22
51: A01G
71: Yangtze Normal University
72: Sai Ying, Yapeng Cao, Cezheng Wang, Ruizhe Wang, Hongxi Yang, Yuhang Li, Xiaokun Tang, Man Zhang, Wenshun Hu, Zhijie Hu, Yanghong Chen

54: A DEGRADABLE VEGETATIVE SUBSTRATE FIXING DEVICE SUITABLE FOR SLOPE ECOLOGICAL RESTORATION

00: -

The invention relates to the field of slope ecological restoration and discloses a degradable vegetative substrate fixing device suitable for slope ecological restoration. In the present invention, multiple rotating shaft mounting plates are fixedly connected to the side of a first mounting plate. A rotating shaft is rotatably connected at the middle position between adjacent rotating shaft mounting plates. A side bolt is threadedly connected to the side of each rotating shaft mounting plate, and the other end of the side bolt passes through the rotating shaft mounting plate to bear against the rotating shaft.The technical solution proposed by the present invention provides a first mounting plate and a second mounting plate to connect adjacent fixing frames. In ecological restoration operations, multiple fixing frames are used to secure the positions of the fixing grooves, ensuring the stability of the vegetative substrate and facilitating subsequent planting of vegetation. By adjusting the angle between the first mounting plate and the second mounting plate, the device can be adapted to different slope conditions, facilitating the placement and use of the fixing frames.

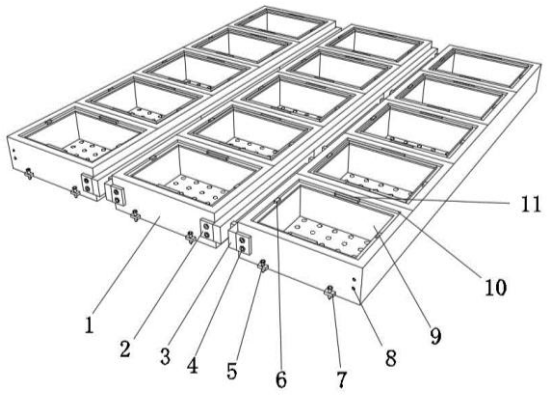

21: 2026/02777. 22: 2026/03/11. 43: 2026/10/22
51: G06K
71: Henan University of Urban Construction
72: Yifei Chu, Xiaxiao Tian, Siyu Guo, Beibei Fu

54: AN INTELLIGENT MONITORING SYSTEM FOR PLAYERS' PHYSIOLOGICAL CONDITIONS

00: -

The present invention relates to the field of sports monitoring technology and discloses an intelligent monitoring system for players' physiological conditions. The system includes a physiological data acquisition module, a sports parameter acquisition module, an intelligent monitoring module and an intelligent early warning module. The invention collects the physiological data and sports data of players during the game, evaluates and analyzes the collected data to obtain the physiological health assessment coefficient and the sports fatigue assessment coefficient of the players respectively, calculates the comprehensive assessment coefficient based on the physiological health assessment coefficient and the sports fatigue assessment coefficient, and determines whether to issue an early warning based on the comprehensive assessment coefficient. If the comprehensive assessment coefficient does not reach the safety threshold standard, an early warning is issued. The physiological state of the players is comprehensively analyzed based on multi-dimensional data, which

improves the accuracy of the analysis results and realizes intelligent early warning.

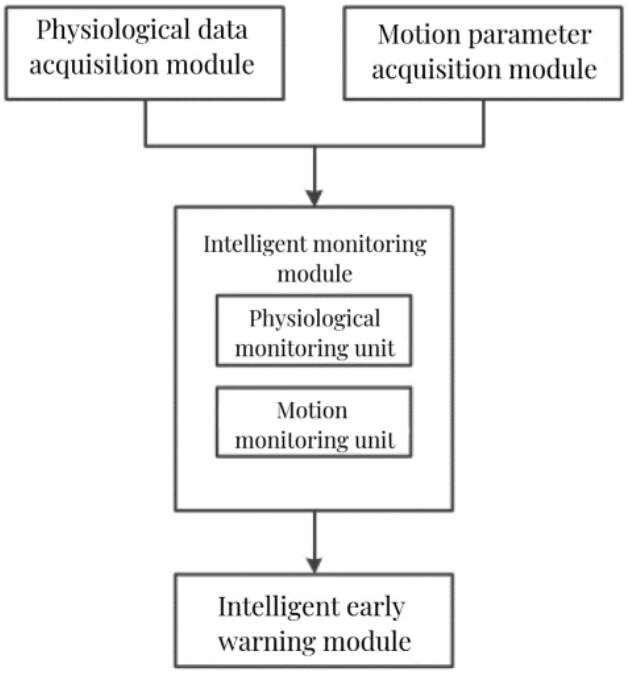

21: 2026/02778. 22: 2026/03/11. 43: 2026/10/22
51: B66F
71: Zhejiang Industry and Trade Vocational College
72: Chen Suilei, Chen Qin, Chen Lei
54: LOGISTICS FORKLIFT HAVING COLLISION AVOIDANCE
00: -

The present invention relates to the technical field of logistics vehicles. Disclosed is a logistics forklift having collision avoidance. The forklift comprises a vehicle body, a cab, a fork frame, a fork plate, and an anti-collision mechanism provided on the left, right, and rear sides of the vehicle body. the anti-collision mechanism comprises a base, an anti-collision housing, a baffle, a first anti-collision assembly and a second anti-collision assembly. The anti-collision housing uses a multi-layer buffer structure between the inner and outer rubber shells and the middle interlayer; the first anti-collision assembly realizes multi-stage buffering with the compression spring by means of the elastic stretching assembly and triggers the first pressure sensor to alarm; and the second anti-collision assembly is arranged on two sides of the plane, and achieves planar collision detection and buffering by means of the second pressure sensor. According to the present invention, the collision protection capability of the forklift on the side surface and the rear side is significantly improved by means of the anti-collision structure with multi-orientation and multi-stage buffering, and the collision occurs in time when the collision occurs, thereby improving the operation safety.

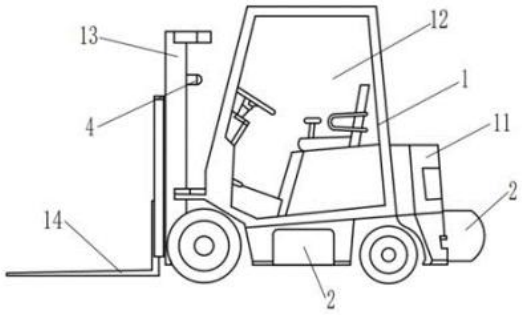

21: 2026/02779. 22: 2026/03/11. 43: 2026/10/22
51: C12N; C12Q
71: YUNNAN ACADEMY OF AGRICULTURAL SCIENCES SUGARCANE RESEARCH INSTITUTE
72: LIU, Hongbo, LU, Xin, LI, Chunjia, MAO, Jun, LI, Xujuan, LIN, Xiuqin, XU, Chaohua, KONG, Chunyan, LIU, Xinlong, CHEN, Shengxian
54: IDENTIFICATION AND APPLICATION OF HAP19 GENOTYPE OF SPSB GENE
00: -

The present invention belongs to the technical field of plant molecular breeding, and particularly relates to identification and application of a Hap19 genotype of an SPSB gene. The present invention provides a method for identifying a sugarcane SPSB gene isoform 2, comprising the following steps: extracting total RNA from a sample to be detected, and performing reverse transcription to obtain cDNA; using the cDNA as a template to perform PCR amplification; and detecting a PCR amplification product by agarose gel electrophoresis, followed by verification through sequencing. The present invention successfully identifies the expression of the SPSB gene isoform 2. This isoform retains a 29 bp fragment at the end of the 5th intron in an mRNA sequence; and the length of this inserted fragment is not a multiple of three, resulting in an alteration of a coding structure of an SPSB protein after translation. By designing specific primers based on this unique sequence, detection and marker development of this isoform can be achieved at the cDNA level,

providing a specific target for distinguishing different alleles and isoforms of SPSB.

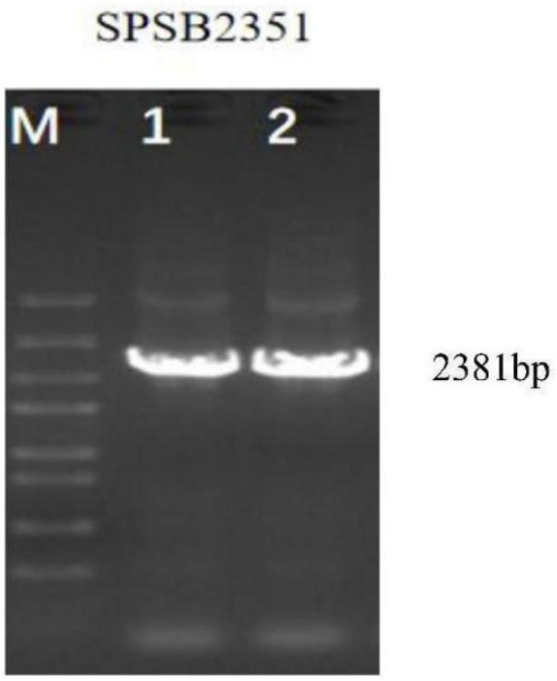

21: 2026/02780. 22: 2026/03/11. 43: 2026/10/22
51: G01N
71: LESHAN NORMAL UNIVERSITY
72: HUANG, Wangyin

54: ACTIVE SAMPLING DEVICE FOR PERSISTENT ORGANIC POLLUTANTS (PAHS) IN THE ATMOSPHERE

00: -

The invention relates to sampling device technology and discloses an active sampling device for persistent organic pollutants (PAHs) in the atmosphere. The device comprises a bottom plate and a column fixed to the top of the bottom plate. A lifting mechanism is arranged in an inner cavity of the column and is connected to a protective box. A filter box is arranged at a top of the inner cavity of the protective box, and positioning frames are fixed at upper and lower portions inside the filter box. A filter mold frame is inserted in the positioning frames for sampling. An extraction mechanism draws ambient air containing PAHs into the filter box so that particulate pollutants are captured by the filter frame. Structural elements including a through hole, limit rod, pull block, clamp plate, and compression spring enable convenient installation, fixation, and removal of the filter frame.

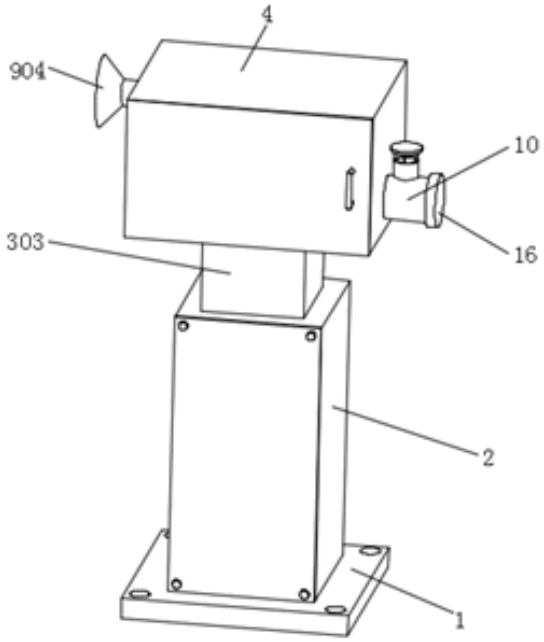

21: 2026/02781. 22: 2026/03/11. 43: 2026/10/22
51: B65G
71: NANJING VOCATIONAL COLLEGE OF INFORMATION TECHNOLOGY
72: ZHU, Chunyan, WANG, Wanjun, ZHOU, Linyong, SUN, Lei, XUAN, Yan
33: CN 31: 2026102203215 32: 2026-02-24

54: DAMAGE-PREVENTION PRODUCT PLACEMENT DEVICE FOR LOADING/UNLOADING AND TEMPORARY STORAGE AREAS IN AN INTELLIGENT MANUFACTURING LINE

00: -

Disclosed is a damage-prevention product placement device for loading, unloading, and temporary storage areas in an intelligent manufacturing line. The device comprises a main frame in which a lifting plate is arranged to slide vertically. A linkage locking assembly is arranged on the lifting plate and includes a movable platform, lifting locking plates arranged to slide vertically on the movable platform, and an arc-shaped pushing frame arranged below the lifting locking plates. Through cooperation between the linkage locking assembly and a pull-out carrier plate, the locking structure can be automatically triggered by movement and extrusion without requiring an

additional driving mechanism. The extrusion linkage mechanism enables automatic locking during operation, thereby stabilizing the pull-out carrier plate and preventing product displacement or damage. The structure reduces system complexity, lowers manufacturing cost and precision requirements, and improves operational reliability in loading, unloading, and temporary storage processes within intelligent manufacturing systems.

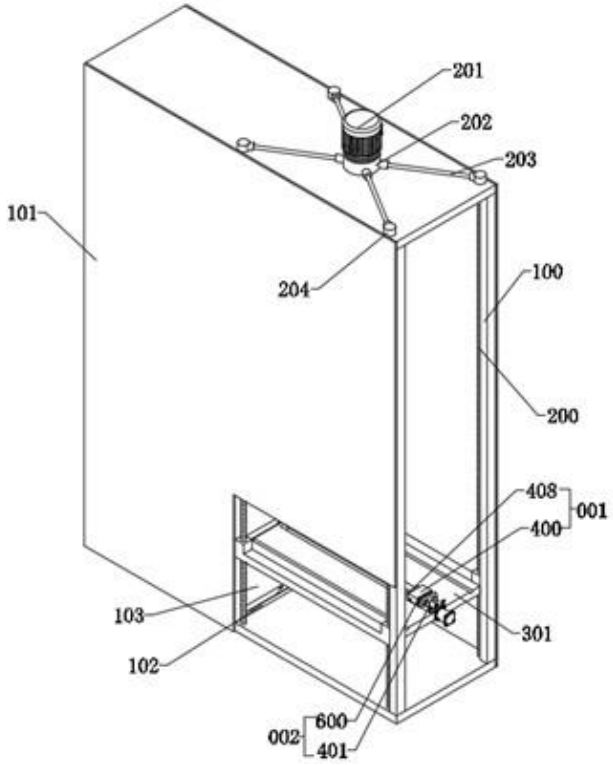

21: 2026/02783. 22: 2026/03/11. 43: 2026/10/22
51: G06Q
71: LIUZHOU POLYTECHNIC UNIVERSITY
72: HUANG, Fang
54: MUSIC RECOMMENDATION SYSTEM BASED ON BIG DATA
00: -

The invention relates to computer information processing technology and discloses a music recommendation system based on big data. The system comprises a three-dimensional data acquisition and processing module configured to collect real-time physiological data, dynamic contextual data, and music behavior data. Millisecond-level timestamp alignment is used to achieve temporal coupling among multiple data sources, and a mutual information entropy algorithm is applied to screen association features and construct a three-dimensional data association rule library. A distributed processing and privacy protection module performs hierarchical processing of large-scale data through an end-to-end cloud collaborative architecture while ensuring data security and privacy protection. By dynamically integrating physiological state, environmental context, and user behavior information, the system performs precise temporal correlation analysis and redundant feature denoising. The system improves the accuracy, personalization, and real-time performance of music recommendation and provides more adaptive and intelligent music content delivery.

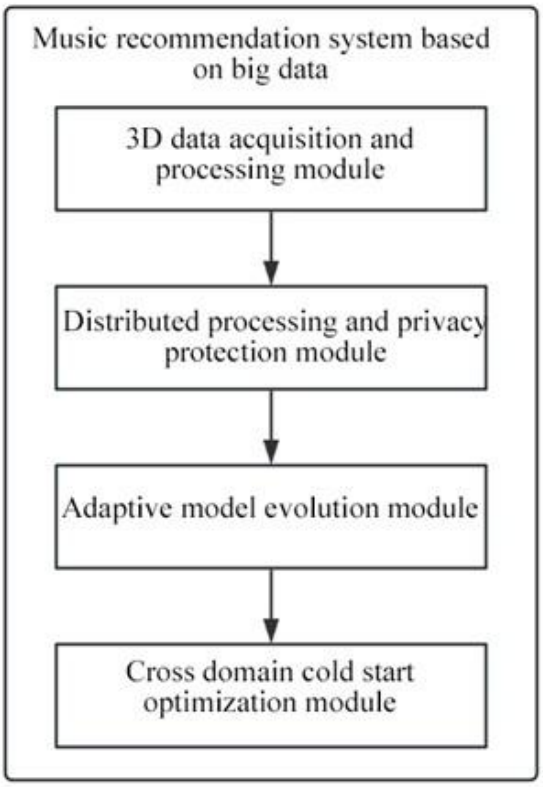

21: 2026/02784. 22: 2026/03/11. 43: 2026/10/22
51: H02G
71: HUAINAN NORMAL UNIVERSITY, HEFEI ZHONGJIYUAN TECHNOLOGY CO., LTD.
72: SONQ, Qiang, MENG, Deshuo, LI, Chuang, LV, Zhaocheng, WU, Shenbing
54: CABLE CLAMPING DEVICE FOR ELECTRONIC INFORMATION COMMUNICATION
00: -

Disclosed is a cable clamping device for electronic information communication compriseing a base and a cable body, wherein three support plates are fixed on the top of the base at equal intervals. An adjustment box is fixed at a central position on the support plates, and an adjustment component is arranged inside the adjustment box. Concave frames are arranged on both sides of the support plates, and positioning components are arranged on both sides of the adjustment box. By operating the adjustment component, the positioning components move vertically so that conical plates can adapt to cable bodies of different diameters. A spring and damper mechanism provides elastic buffering and continuous clamping force when the handle is pressed, preventing rigid impact and improving stability. The device enables reliable fixation of cables with multiple specifications using a single structure, reducing material types and inventory costs in communication installations

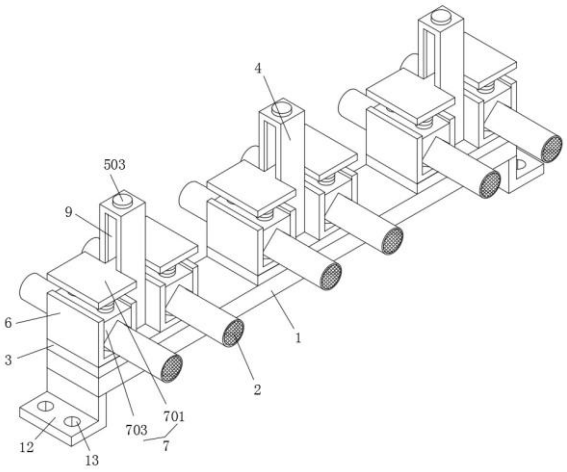

21: 2026/02785. 22: 2026/03/11. 43: 2026/10/22
51: E21D
71: SOUTHWEST UNIVERSITY OF SCIENCE AND TECHNOLOGY
72: LUO, Yaodong, LIAO, Chuankang, YANG, Shaoping, ZHANG, Bihe, MA, Luyao, ZHANG, Haoyan, DAI, Qunwei, HE, Lisha

54: REAL-TIME DETECTION AND ACTIVE PRESSURE RELIEF INTEGRATED DEVICE FOR ROCK BURST RISK DURING TUNNEL CONSTRUCTION

00: -

Disclosed is a real-time detection and active pressure relief integrated device for rock burst risk during tunnel construction comprising a base provided with walking components arranged on both sides of an inner cavity of the base. A first electric push rod is fixedly connected between the walking components. A detection box carrying a detection sensor is movably arranged on the device to perform real-time monitoring of rock wall stress conditions. The first electric push rod and an adjustment component drive vertical and lateral movement of a detection cylinder so that the detection sensor can be positioned against rock walls at different heights and locations. A pressure relief component integrated with the detection system to immediately perform pressure relief operations once abnormal stress conditions indicating rock burst risk are detected. The device integrates movement, detection, pressure relief functions in a single structure, improving operational efficiency and enhancing safety during tunnel construction.

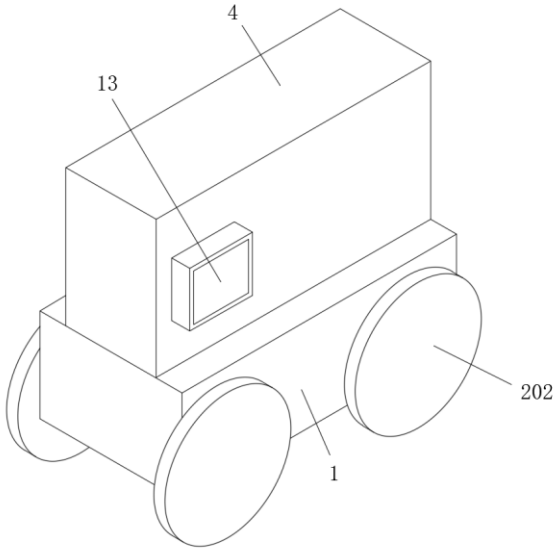

21: 2026/02794. 22: 2026/03/11. 43: 2026/10/23
51: G01M
71: Gansu Agricultural University
72: YU, Yanping, MA, Rui, ZHANG, Wenjie, LI, Xinchun
33: CN 31: 202610055400.5 32: 2026-01-15

54: VIADUCT WIND TUNNEL MODEL AND TEST METHOD

00: -

This application belongs to the technical field of wind tunnel test, and discloses a viaduct wind tunnel model and a test method. The viaduct wind tunnel model includes a test platform and at least two mutually interlocking model units provided on the

test platform. The model unit includes telescopic support columns and a deck structure provided on the top of the telescopic support columns. The deck structure includes a girder and a deck panel provided on the girder. The deck panel includes a lower plate fixedly provided on the girder, height adjustment devices provided on the lower plate, an upper plate provided n the height adjustment devices, and side plates provided between the upper plate and the lower plate. The girder is slidably connected to the telescopic support columns, and the telescopic support columns are movable along a bridge-longitudinal direction for adjustment.

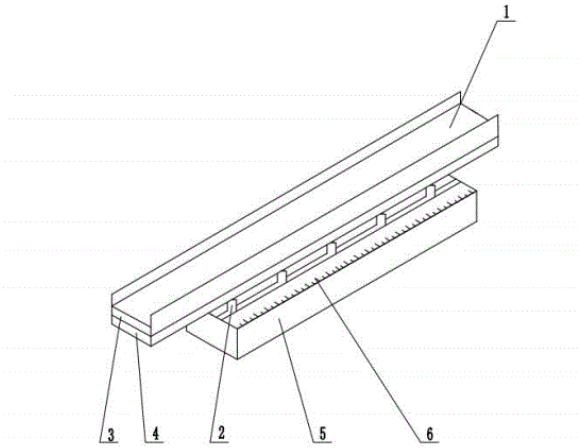

21: 2026/02795. 22: 2026/03/11. 43: 2026/10/22
51: A23K; A61K; C07C
71: ANIPHA TECHNOLOGIES PTY LTD
72: PENG, Xianfeng
33: CN 31: 202311269788.1 32: 2023-09-28

54: AMMONIUM FERRIC CITRATE-ORGANIC ACID COMPLEX, AND PREPARATION METHOD THEREFOR AND USE THEREOF

00: -

The present invention relates to an ammonium ferric citrate-organic acid complex or a salt thereof and a preparation method therefor, further relates to a composition comprising the ammonium ferric citrate-organic acid complex or the salt thereof and the use of the complex as an animal feed additive and a food additive, and further relates to the use of the ammonium ferric citrate-organic acid complex or the salt thereof in the preparation of a drug for preventing and treating diarrhea in a farmed animal.

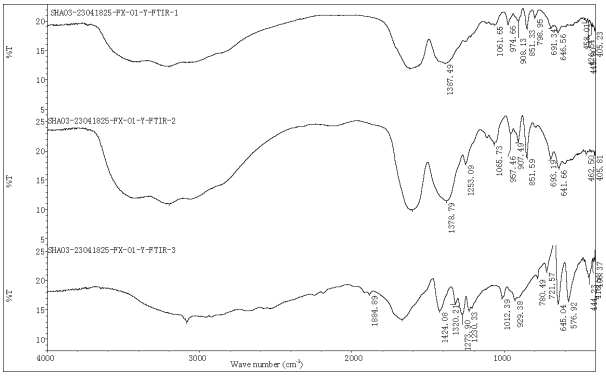

21: 2026/02796. 22: 2026/03/11. 43: 2026/10/22
51: G06F; H03L
71: RAYSTAR MICROELECTRONICS TECHNOLOGY CO., LTD
72: HUANG, Daliang, MA, Huaichang, MAO, Xin, GU, Ming
33: CN 31: 202311257393.X 32: 2023-09-27

54: CLOCK SWITCHING CONTROL CIRCUIT AND CONTROL METHOD

00: -

The present invention discloses a clock switching control circuit and control method. The control circuit includes: a plurality of clock sources, a clock source selection circuit, a clock source synchronization circuit, a switching control module, and an output clock switching circuit. The clock source selection circuit is configured to select a clock source according to input signal statuses and priorities of the priority of clock sources, input a clock source selection signal into the switching control module, and input a selected clock source signal into the clock source synchronization circuit; the clock source synchronization circuit is configured to synchronize an input clock source with an output clock source and output a jitter indication signal; the switching control module is configured to output, according to the jitter indication signal and the clock source selection signal, a logic control signal for controlling output clock switching; and the output clock switching circuit is configured to switch an output clock according to the logic control signal. This solution can reduce jitter in a clock switching process and achieve seamless clock switching.

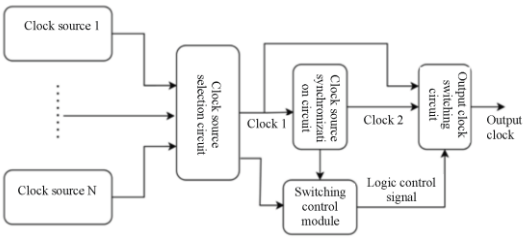

21: 2026/02811. 22: 2026/03/11. 43: 2026/10/22
51: A23J
71: NEXNOA GMBH
72: EMIN, Azad
33: DE 31: 10 2023 127 054.0 32: 2023-10-04
54: METHOD FOR GENERATING A SOYA PROTEIN TEXTURATE
00: -
The invention relates to a method for producing an anisotropic plant-based soya texturate, the texturate comprising a water proportion of less than 50 wt.% and more than 50 wt.% soya-based ingredients based on the dry mass, wherein a protein proportion comprises more than 30 wt.% based on the dry mass. In the method, a soya protein mixture with more than 50% of the dry mass is provided and from this a basic mix-ture is generated such that a water proportion of the basic mixture is in the range from 25 wt.% to 55 wt.%. The basic mixture is extruded. Then, a first axial and/or transversal stretch is exerted on the ex-trudate, in particular in a channel with a changing cross section, to generate a texturate. Finally, the texturate can be rolled or cut.

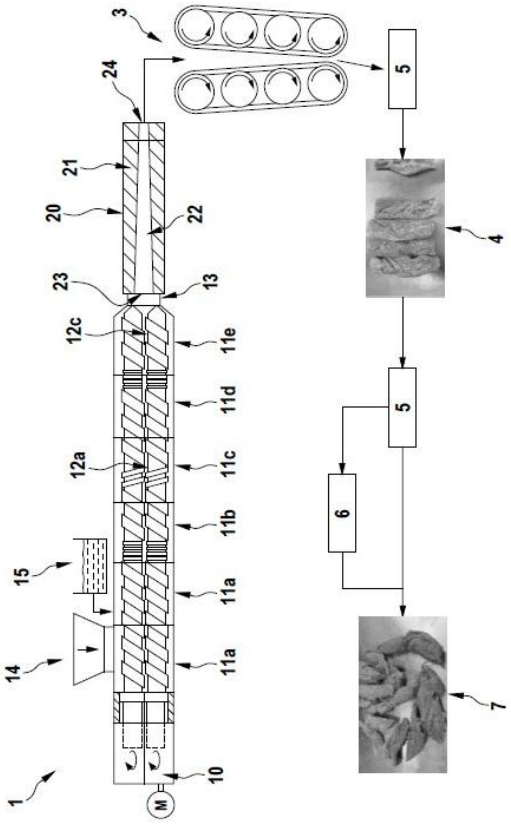

21: 2026/02813. 22: 2026/03/11. 43: 2026/10/22
51: A61K; C07C; C07K; A61P
71: YANTAI LANNACHENG BIOTECHNOLOGY CO., LTD.
72: CHEN, Xiaoyuan, YANG, Hongzhang, ZHOU, Zijian, SHU, Linlin, WEN, Xuejun, WU, Xiaoming, ZHANG, Jingjing
33: CN 31: 202311212336.X 32: 2023-09-20
54: DANSYLAMIDE-MODIFIED COMPOUNDS TARGETING PSMA, PREPARATION METHOD THEREFOR, AND USE THEREOF
00: -
having a structure thereof as represented by formula A or formula I, where R1 is of an amino acid analog structure; R2 is of a prostate-specific membrane antigen-targeting compound structure; R3 is a nuclide chelating group; and L is (X)n (CH2)m (Y)q , where X and Y are independently selected from lysine, glutamic acid, or a derivative structure containing lysine or glutamic acid, n is an integer from 0 to 10, m is an integer from 0 to 20, and q is an integer from 0 to 6, and where each CH2 may be individually replaced with OCH2 , NH(CO) , or (CO) NH . The present invention further provides a

radionuclide-labeled compound based on the structure of the compound. The compound and the radionuclide-labeled compound exhibit relatively high tumor uptake and retention time, making them suitable for use in nuclide therapy and imaging of PSMA-highly expressing tumors.

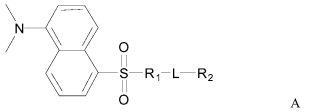

A

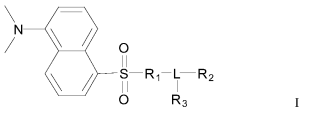

I

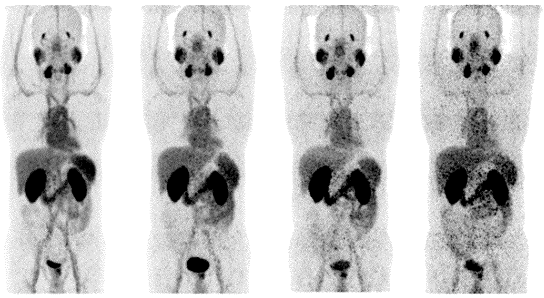

21: 2026/02832. 22: 2026/03/12. 43: 2026/10/23
51: C03C
71: Henan University of Urban Construction
72: GUO Junji, WANG Chaoyong, WANG Wenfang, ZHAO Jun, LIU Zhiqing
54: TEMPERATURE DIFFERENCE SELF-POWERED ELECTROCHROMIC INTELLIGENT WINDOW AND PREPARATION METHOD THEREOF
00: -
The invention discloses a temperature difference self-powered electrochromic intelligent window and preparation method thereof, belonging to the technical field of functional materials. The electrochromic intelligent window includes the following structures: two glass plates with transparent bottom electrodes, on which electrochromic functional film layers are deposited, are symmetrically arranged at intervals; the hollow part between the two glass plate structures is used for filling electrolyte/electrolyte solution materials; a sheet electrode is supported by a structural support, one end of which is connected to the inside of a window frame and part of which is immersed in the electrolyte/electrolyte solution material; a temperature difference power generation element is arranged at a local position of the window frame on the surrounding sides, and two ends of the temperature difference power generation element, namely a cold end and a hot end, face the indoor and outdoor respectively; a sheet lithium battery energy storage element is integrated inside the window frame on the surrounding sides (replaceable), the input end of which is connected with the cold end and the hot end of the temperature difference power generation element, and the output end of which is connected with the bottom electrode and the sheet electrode. Through the integration of the temperature difference power generation element and the lithium battery energy storage element, the electrochromic intelligent window realizes self-power supply by utilizing the natural temperature difference between the inside and outside of the window, and achieves zero energy consumption operation.

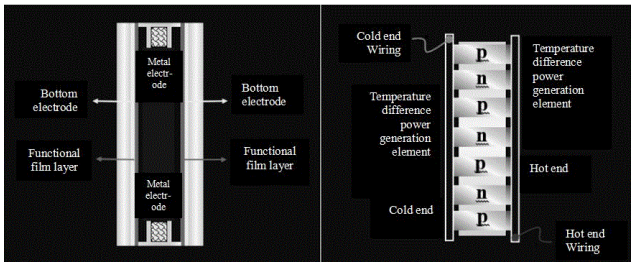

21: 2026/02833. 22: 2026/03/12. 43: 2026/10/23
51: G01N
71: China Machinery Huanyu(Shan Dong)Vehicle Certification And Testing Co., Ltd
72: HUANG, Xiaobo, TIAN, Xiaochong, ZHU, Zhangling
33: CN 31: 202510795490.7 32: 2025-06-16
54: A BATTERY PRESSURE DETECTION DEVICE
00: -
The present invention belongs to the technical field of battery pressure detection, particularly a battery pressure detection device, which includes a pressure detection box. One side of the outer wall of the pressure detection box is provided with a point-surface switching mechanism. One end of the outer

wall of the point-surface switching mechanism is fixedly connected with a hydraulic push rod through a flange, and the piston rod of the hydraulic push rod is fixedly connected with a pressure sensor through bolts. One side of the outer wall of the pressure sensor is welded with a threaded sleeve, and the inner wall of the threaded sleeve is screwed with a needle. One end of the outer wall of the needle is provided with a protrusion.

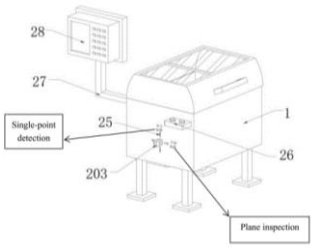

21: 2026/02834. 22: 2026/03/12. 43: 2026/10/23
51: A01M; B62K
71: Shiguo Zhang
72: Shiguo Zhang, Yan Zhang, Shuyue Zhang
54: SPRAYING AND FERTILIZING METHOD, SYSTEM, AND MOTORCYCLE FOR AIR-GROUND DUAL-USE MANNED UNMANNED FLYING MOTORCYCLE
00: -
A spraying and fertilizing method, system, and motorcycle for an air-ground dual-use manned unmanned flying motorcycle, relating to the cross-technical field of agricultural plant protection and aircraft, the system integrates six electrically connected modules: an air-ground traveling module, a manned module, a spraying and fertilizing module, an environment perception module, a central control module, and an energy module, three control modes are supported, and a hybrid oil-electric system achieves long endurance; the spraying module can dynamically adjust parameters, and the environment perception module ensures operational accuracy. The method is divided into four stages: preparation, traveling, spraying/fertilizing, and ending, spraying parameters are dynamically adjusted through an algorithm, and precise supplementary spraying is achieved. The invention solves the problems of poor terrain adaptability, single control mode, and low precision of traditional equipment, realizes integrated operation, greatly improves plant protection operation efficiency, and reduces labor and agricultural material costs.

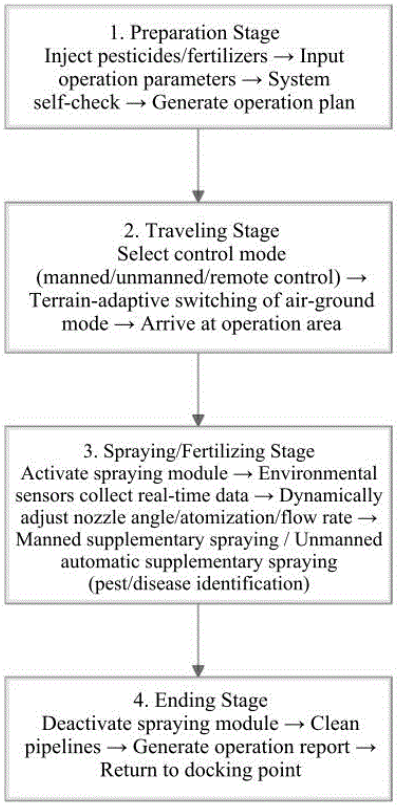

21: 2026/02867. 22: 2026/03/13. 43: 2026/10/30
51: G01N
71: Zunyi Vocational and Technical College
72: ZHU Chongli, JIANG Xi, LIU Bing
54: NON-DESTRUCTIVE TESTING DEVICE FOR DEFECTS IN REINFORCED CONCRETE STRUCTURES
00: -
The present invention relates to the technical field of concrete testing, and provides a non-destructive testing device for defects in reinforced concrete structures. The device includes a storage box, support mechanisms, an adjusting mechanism, a lifting mechanism, and a control device. The support mechanisms are rotatably connected to four corners of a bottom of the storage box; the adjusting mechanism is fixedly connected to a front side of a bottom of an inner cavity of the storage box by bolts; the lifting mechanism is rotatably connected to a rear side of a left side wall of the adjusting mechanism; the control device is located on a right side of the inner cavity of the storage box; and the control device is electrically connected to the adjusting mechanism and the lifting mechanism via wires. This non-destructive testing device for defects in

reinforced concrete structures is reasonable in structural design, which enables the testing device to be easy to carry and more convenient to use, makes the testing process time-saving and labor-saving, and simultaneously improves the testing accuracy and expands the testing range.

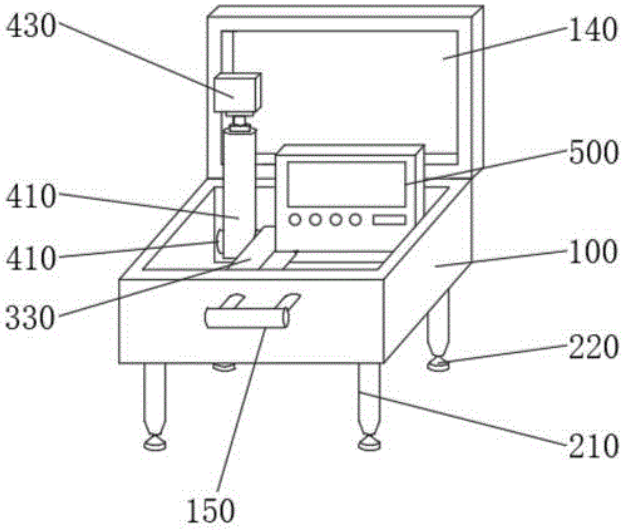

21: 2026/02868. 22: 2026/03/13. 43: 2026/10/23
51: G05D
71: Henan University of Urban Construction
72: LIU Zhiqing, GUO Junji, LI Wei, ZHANG Renqi, WANG Chaoyong, REN Yixin

54: IMAGE-BASED VISIBLE FAULT DETECTION METHOD FOR PHOTOVOLTAIC MODULES

00: -

The present invention discloses an image-based visible fault detection method for photovoltaic modules, comprising: using an unmanned aerial vehicle platform equipped with an imaging camera to acquire an image of a photovoltaic array; uploading the photovoltaic array image to a computer processing terminal in real time; performing a preprocessing operation on the uploaded photovoltaic array image via the computer processing terminal; training a YOLACT neural network, pre-trained on a public dataset, using a photovoltaic module instance segmentation dataset to obtain a trained YOLACT instance segmentation model; inputting the preprocessed photovoltaic array image into the trained YOLACT instance segmentation model; training a YOLOv8 neural network, pre-trained on a public dataset, using a photovoltaic module fault detection dataset; inputting the segmented and labeled individual photovoltaic module images one by one into the trained YOLOv8 fault detection model to perform fault detection on the individual photovoltaic module images.

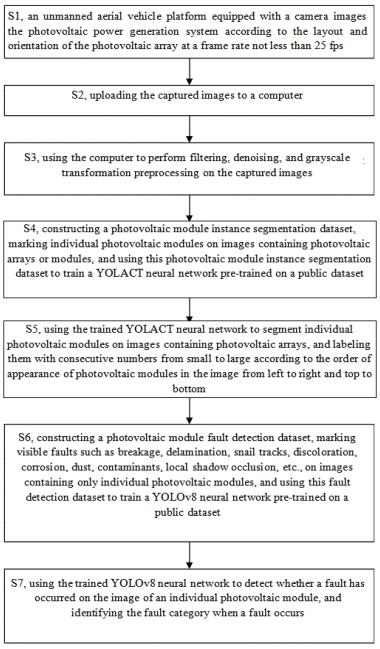

21: 2026/02871. 22: 2026/03/13. 43: 2026/10/23
51: B03D
71: Beijing Research Institute of Chemical Engineering and Metallurgy, China Nuclear Mining Science and Technology Corporation
72: Yuhui TIAN, Chunfeng LI, Guang LI, Jia MA, Chen ZHANG, Shouxun ZHANG, Xianming HOU, Zhuo LI
33: CN 31: 202510314412.0 32: 2025-03-17

54: BENEFICIATION METHOD FOR FINE-GRAINED CYANIDE TAILINGS

00: -

The present application provides a beneficiation method for fine-grained cyanide tailings, comprising the following steps: S1, grading cyanide tailings by means of a hydrocyclone, where ore particles having a particle size of less than 20 micrometers enter overflow tailings, and ore particles greater than 20 micrometers enter a cyclone underflow; S2, grinding the cyclone underflow slurry to a target particle size, feeding the ground slurry into a flotation cell, adding a flotation reagent, and performing a flotation stage to obtain flotation concentrate 1 and flotation tailings 1; S3, adding the flotation tailings 1 to a collector and feeding the mixture into a scavenger flotation stage. The beneficial effects of the present invention include: taking account of the close association

between gold minerals and sulfide minerals like pyrite, along with the partial oxidation characteristics, gangue minerals are removed efficiently by means of a multi-stage slurry conditioning-flotation system, thereby significantly improving the efficiency of precious metal enrichment; and by introducing a low-intensity magnetic separation and purification process after flotation of the concentrate, magnetite and mechanical iron filings are separated from the concentrate effectively, further improving the quality of the concentrate.

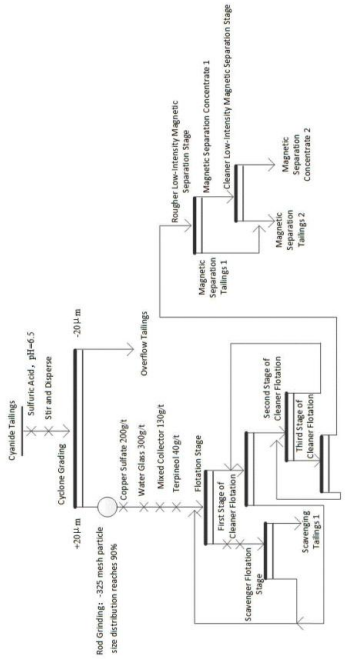

21: 2026/02872. 22: 2026/03/13. 43: 2026/10/23
51: A23L
71: ZHEJIANG BIYANG YOUXIAN FOOD CO., LTD., ZHEJIANG GONGSHANG UNIVERSITY
72: HU, Jianbo, CHEN, Yuewen, HU, Jianxia, MAO, Yiting, LONG, Yongjie, CAI, Wenqiang, NI, Yishu, YUAN, Yanwei, MAO, Junlong

54: HARPADON NEHEREUS FLOSS PREPARED BY MICROWAVE-ASSISTED HOT AIR DRYING AND VACUUM FRYING AND PREPARATION METHOD THEREOF

00: -

The present invention belongs to the technical field of food processing, and provides a Harpadon nehereus floss prepared by microwave-assisted hot air drying and vacuum frying and a preparation method thereof. The method of the present invention includes the following steps: (1) mixing an eviscerated Harpadon nehereus with a marinating solution for marination, to obtain the marinated fish; (2) subjecting the marinated fish to microwave-assisted hot air drying; (3) freezing the dried marinated fish to obtain the frozen fish; (4) placing the frozen fish in palm oil for vacuum low-temperature frying, to obtain the fried fish; and (5) centrifuging the fried fish for de-oiling, to obtain a Harpadon nehereus floss. The Harpadon nehereus floss prepared by the method of the present invention exhibits advantages such as desirable shape, low oil content, and good shelf-life stability.

21: 2026/02873. 22: 2026/03/13. 43: 2026/10/23
51: A61K
71: MA YONGJUN
72: MA, Yongjun

54: PREPARATION METHOD AND USE OF ANTI-AGING FERMENTATION EXTRACT

00: -

The present invention relates to a preparation method and use of an anti-aging fermentation extract, and belongs to the field of traditional Chinese medicine fermentation technology. The present invention provides a preparation method of an anti-aging fermentation extract, which includes the following steps: mixing Angelica dahurica, Poria cocos, Bletilla striata, Typhonium giganteum, Leonurus japonicus, Agastache rugosa, and Aquilaria sinensis, crushing the mixture to obtain a blended material, mixing the blended material with water to obtain a mixed solution, performing ultrasonic treatment, filtering to obtain a filtrate, and mixing the filtrate with a composite probiotic culture for anaerobic fermentation, thereby obtaining the anti-aging fermentation extract. The present invention performs anaerobic fermentation on the traditional Chinese medicines using specific probiotics based on traditional Chinese medicines and following the monarch-minister-assistant-messenger compatibility principle of traditional Chinese medicine, thereby obtaining an anti-aging fermentation extract that integrates active components of the traditional Chinese medicines, prebiotics, and metabolites of probiotics. The extract is easily recognized and utilized by the skin, exerts a synergistic skin-rejuvenating effect exceeding the sum of individual components, and significantly improves skin aging.

21: 2026/02874. 22: 2026/03/13. 43: 2026/10/23
51: G16H; G16B
71: YUNNAN ACADEMY OF AGRICULTURAL SCIENCES SUGARCANE RESEARCH INSTITUTE
72: LIU, Hongbo, LIN, Xiuqin, MAO, Jun, XU, Chaohua, LI, Xujuan, LI, Chunjia, KONG, Chunyan, LIU, Xinlong, LU, Xin, CHEN, Shengxian

54: IDENTIFICATION AND APPLICATION OF HAP1 GENOTYPE OF SPSB GENE

00: -

The present invention relates to the technical field of plant molecular breeding, in particular to identification and application of a Hap1 genotype of an SPSB gene. Provided is a method for identifying a sugarcane SPSB gene isoform 1, comprising the following steps: extracting total RNA from leaves at a mature stage of a sugarcane sample to be detected, and performing reverse transcription to obtain cDNA; using the cDNA as a template to perform PCR amplification; detecting a PCR amplification product, wherein if a fragment comprising a sequence of SEQ ID NO: 2 can be specifically amplified, the sugarcane SPSB gene isoform 1 is determined to be present in the sample. The method of the present invention facilitates the development of tools for marker-assisted selection of sugar traits, thereby rapidly constructing high-sugar sugarcane germplasm with excellent genetic resources. Based on this, specific primers can be designed using the retained sequence of the 9th intron of this isoform to achieve allele typing of SPSB genes at the expression level, thereby promoting expression studies of this isoform and the development of markers for molecular-assisted breeding.

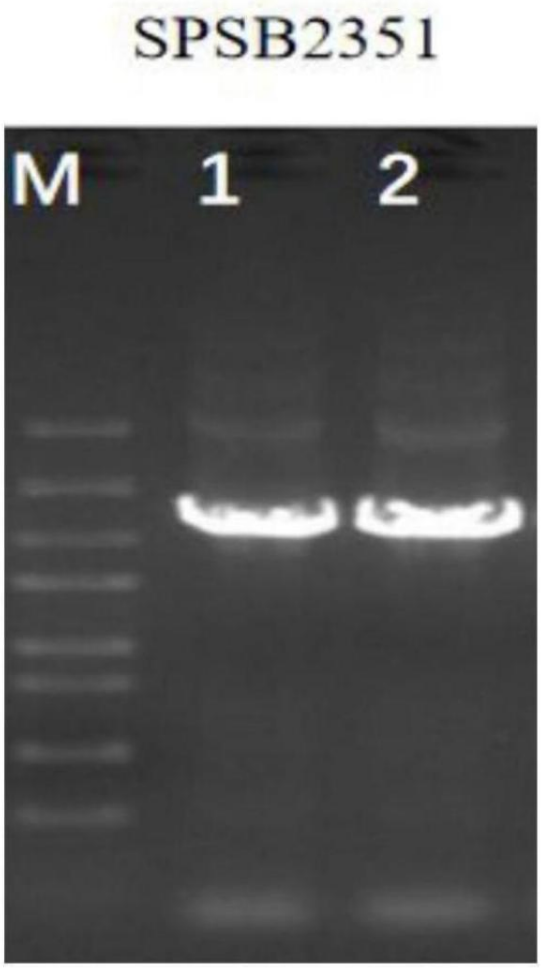

21: 2026/02877. 22: 2026/03/13. 43: 2026/10/23
51: G06F
71: Kunming University of Science and Technology
72: ZHANG, Quan, CHEN, Zhongyuan, ZHAO, Dong, REN, Tao, SUN, Long, GUAN, Shenjin
33: CN 31: 202510598659.X 32: 2025-05-09

54: METHOD FOR DISTINGUISHING ORE DEPOSIT TYPES BY USING MACHINE LEARNING AND SPHALERITE TRACE ELEMENTS

00: -

Disclosed in the present invention is a method for distinguishing ore deposit types by using machine learning and sphalerite trace elements, which relates to the technical field of resource exploration of lead and zinc ore deposits. This method constructs a dataset by using multi-element data of sphalerite from various types of lead and zinc ore deposits worldwide. A support vector machine (SVM) machine learning algorithm optimized by a Tree-

structured Parzen Estimator (TPE) is utilized to build a classification model of the sphalerite trace elements. Sphalerite samples are classified and predicted on the basis of the trained TPE-SVM model, the probability and classification results for various deposit types are output, and the performance of the model is evaluated by using various evaluation indexes.

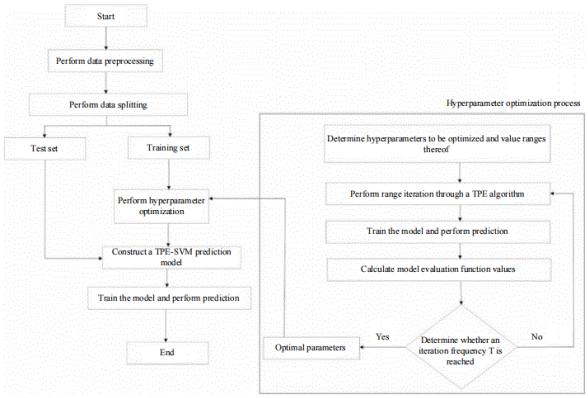

21: 2026/02879. 22: 2026/03/13. 43: 2026/10/23
51: E21B
71: HENAN UNIVERSITY OF URBAN CONSTRUCTION
72: ZHU Wenjie, MA Xingtao, YAN Jiahe
54: METHOD FOR ANALYZING DUCTILITY INDICATORS OF METALLIC MATERIALS
00: -

The present invention relates to the field of metallic material property detection, and provides a method for analyzing ductility indicators of metallic materials. The method includes: firstly applying a normal load on a surface of a metal strip and exciting high-frequency elastic stress waves in the subsurface thereof to acquire a time-domain signal; performing frequency-domain conversion and denoising on the time-domain signal, and extracting a dislocation slip frequency band and a fracture twin frequency band; then discretizing the frequency bands into frequency intervals and calculating an energy probability distribution, and calculating a dislocation slip energy spectrum entropy and a fracture twin energy spectrum entropy respectively; and finally calculating and outputting a dynamic ductility indicator according to a ratio of the dislocation slip energy spectrum entropy to the fracture twin energy spectrum entropy, a linear velocity and the normal load. The present invention accomplishes denoising processing of the time-domain signal by extracting an effective power spectrum, provides a quantitative basis for ductility analysis of metallic materials by calculating the dynamic ductility indicator, and transmits the dynamic ductility indicator to a control system to adjust production line parameters, thereby establishing a closed-loop feedback control process.

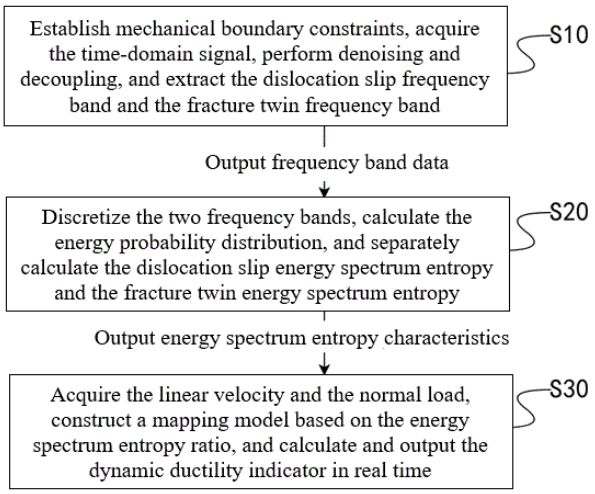

21: 2026/02881. 22: 2026/03/13. 43: 2026/10/23
51: G06T
71: Henan University of Urban Construction
72: MA Zhanlin, LIU Zhan, CHANG Li, YIN Shouqiang, ZHANG Yinglei, WEN Feng, LU Chunyang, LIU Yuhong
54: A METHOD FOR RAPID ESTIMATION OF REGIONAL WINTER WHEAT YIELD BASED ON CROP GROWTH MODEL AND MULTI-SOURCE REMOTE SENSING ASSIMILATION
00: -

The present invention provides a rapid estimation method of regional winter wheat yield based on crop growth model and multi-source remote sensing assimilation, and relates to the technical field of agricultural remote sensing yield estimation. The present invention firstly acquires multi-source remote sensing data during the reproductive period to form a feature vector time series and carry out growth classification; constructs a crop growth model and sets the a priori range of sensitive parameters; constructs an assimilation time window and forms multi-source observation vectors at the key reproductive stage; adopts an ensemble Kalman filter to jointly assimilate the representative samples into the raster unit and outputs assimilated yields, and constructs a regional yield response library; and

trains a rapid estimation of regional yields based on assimilated yields and feature compression indexes. A rapid regional yield estimation model is trained with the assimilated yield and the characteristic compression index, and the regional winter wheat yield is obtained by raster inference in the target year and aggregation at the administrative unit scale. This method combines high accuracy and timeliness.



21: 2026/02882. 22: 2026/03/13. 43: 2026/10/23
51: B65F
71: VISHWAKARMA INSTITUTE OF TECHNOLOGY
72: KOTHARI, Rohit Jitendra, KHANZODE, Nimisha Manoj, KHEDLEKAR, Nirgun Nitin, CHAUDHARI, Prasad, CHAVHAN, Pranali G

54: AN ARDUINO BASED SYSTEM FOR AUTOMATIC AND CONTACTLESS WASTE DISPOSAL

00: -

The present invention is related to an Arduino based system for automatic and contactless waste disposal. The invention is an automated contactless waste disposal bin which provides a hygienic, sensor-based waste management solution that operates automatically when a user approaches. The system employs an ultrasonic sensor, microcontroller, servo motor, LED, and LCD display to ensure touchless operation, reducing germ transmission and promoting public hygiene. It is simple, low-cost, and suitable for widespread use in homes and public spaces.

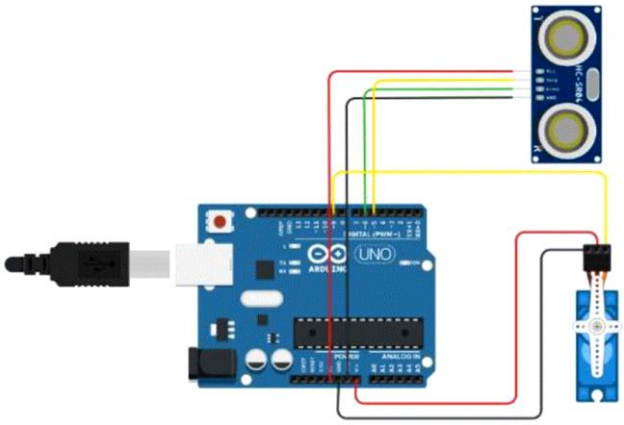

21: 2026/02883. 22: 2026/03/13. 43: 2026/10/23
51: F24F
71: VISHWAKARMA INSTITUTE OF TECHNOLOGY
72: KULKARNI, Sumedha Sudhakar, KUSHWAHA, Sumit Jainath, LALWANI, Parth Anand, MORE, Swanand Prashant, CHAUDHARI, Prasad, CHAVHAN, Pranali G

54: A VENTILATION AND AIR PURIFICATION SYSTEM WITH INTEGRATED OCCUPANCY AND ENVIRONMENTAL SENSING

00: -

The present invention is related to a ventilation and air purification system with integrated occupancy and environmental sensing. The invention discloses a smart ventilation and air purification control system that autonomously adjusts air quality based on occupancy and environmental conditions. The system integrates multiple sensors (PIR, IR beam, gas, temperature, humidity, and dust) connected to an ESP32 microcontroller. Using IoT connectivity, it monitors air parameters and controls fans or purifiers dynamically. Data is transmitted to a cloud dashboard for visualization and alerts. This system offers an energy-efficient, low-cost, and scalable solution for maintaining healthy indoor environments in residential, commercial, and industrial spaces.

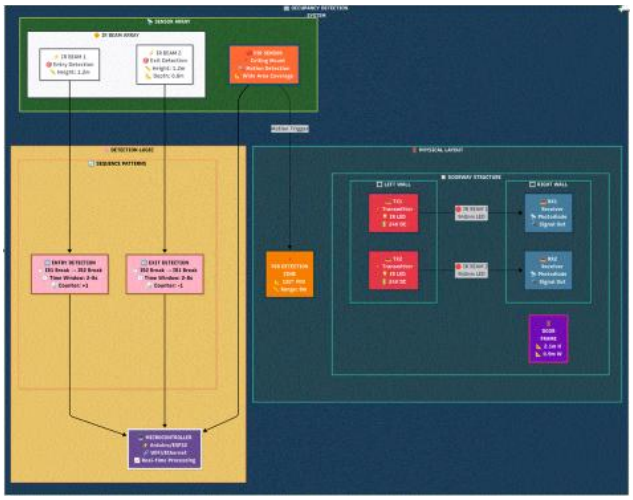

21: 2026/02885. 22: 2026/03/13. 43: 2026/10/23
51: G06Q
71: BHALERAO, Veena Sakharam, BANGALE, Jaya Ravindra, DESETTY, Ramana Venkatadri, GAWALE, Pratiksha Tukaram
72: BHALERAO, Veena Sakharam, BANGALE, Jaya Ravindra, DESETTY, Ramana Venkatadri, GAWALE, Pratiksha Tukaram
54: A COMPREHENSIVE QUALITY ASSESSMENT SYSTEM FOR PRE-PRIMARY EDUCATIONAL INSTITUTIONS
00: -
The present invention is related to a comprehensive quality assessment system for pre-primary educational institutions with interconnected modules including a physical infrastructure assessment module that records environmental conditions such as indoor facilities, outdoor areas, sanitary provisions, and designated play areas; an equipment and materials assessment module that catalogs educational resources; a pre-primary school staff assessment module for monitoring teacher–child ratios, qualifications, and experience; a curriculum design and pedagogy assessment module; an observation of daily activities module for tracking routine practices; and a safety, health, hygiene, and nutritional care module. A scoring and data integration module applies a weighted scoring algorithm to generate an overall quality index aligned with standards like NEP 2020 and NCERT Minimum Specifications.

21: 2026/02886. 22: 2026/03/13. 43: 2026/10/23
51: G06Q
71: VISHWAKARMA INSTITUTE OF TECHNOLOGY
72: SABADE, Shailesh Vishnu, SANGOLE, Sarvajit Pravin, SAPKAL, Shivam Sachin, DESHPANDE, Pallavi, RATNAPARKHI, Archana, GHULE, Gauri
54: AN IOT BASED SHELF INVENTORY MONITORING AND REFILL ALERT SYSTEM
00: -
The present invention is related to an IoT based shelf inventory monitoring and refill alert system. The system uses an ESP32 microcontroller, a load cell with an HX711 amplifier, and an RFID module to track and identify products in real time. A 16x2 LCD display shows stock levels and alerts, while an RTC module records each stock change with the date and time. When inventory goes below a certain level, the ESP32 triggers a refill alert and uploads data to cloud platforms like Firebase or ThingSpeak. This invention offers an affordable and scalable solution for automated inventory control and refill notifications in various industrial and commercial settings.

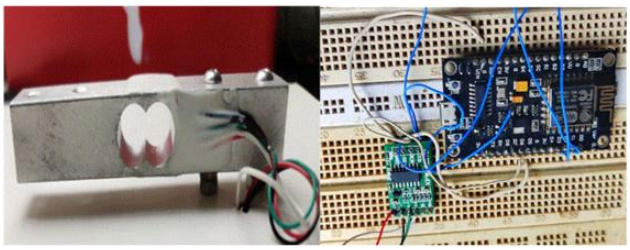

21: 2026/02891. 22: 2026/03/13. 43: 2026/10/23
51: H03B
71: SHANGHAI RAYSTAR MICROELECTRONICS TECHNOLOGY CO., LTD.
72: MAO, Xin, HUANG, Daliang, MA, Huaichang, FANG, Yue
33: CN 31: 202311338549.7 32: 2023-10-17
54: REAL-TIME CLOCK CIRCUIT, INTEGRATED CIRCUIT, ELECTRONIC DEVICE, AND DESIGN METHOD
00: -
The present invention discloses a real-time clock circuit and chip. Three independent LDOs supply power to a temperature sensor, an analog-to-digital converter, and a non-volatile memory of the real-time clock circuit and chip, respectively, to isolate noise interference between different circuit modules. Meanwhile, an innovative low-power replica regulator combined with a current source supplies power to a digital logic control module and an oscillator of the real-time clock circuit respectively, and an intermittent start-stop temperature sensor

controlled by digital logic is employed to implement temperature compensation, thereby achieving ultra-low power consumption with an average operating current of 500 nA, and ultra-high frequency stability of ±2 ppm over a temperature range of -20°C to 50°C and ±2.5 ppm over a temperature range of -40°C to 85°C. The real-time clock circuit and chip meet the requirements of electronic systems for high-standard and accurate time references, and can be widely applied in various industrial and civilian fields.

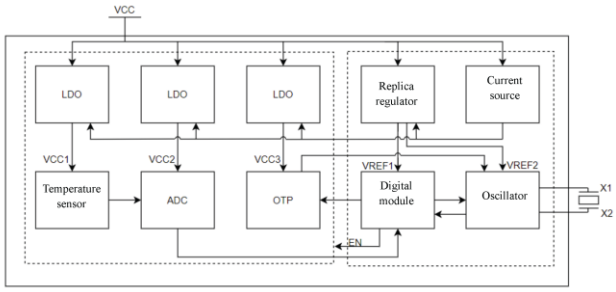

21: 2026/02912. 22: 2026/03/13. 43: 2026/10/23
51: A23L
71: FERTIS INDIA PVT. LTD
72: KANUMURU, Rahul Raju
33: IN 31: 202341010310 32: 2023-08-16
54: FORMULATION FOR IMPROVING SWEETNESS OF THE RARE SUGARS WITHOUT ALTERING THE TEXTURE AND FLAVOUR AND TO THE METHOD THEREOF
00: -
Disclosed herein is a formulation comprising sweet protein with rare sugars for improving the sweetness of the rare sugars with low glycemic index without changing the texture and flavours of said rare sugars and to the method for improving the sweetness of the rare sugars. More particularly, the present invention discloses method for improving the sweetness of the rare sugars without changing the sweetness profile, texture and flavours of the primary sugars. The present invention further discloses addition of Brazzein with Liquid Rare sugars before crystallization or at pre caramalization stage or post caramalization stage of rare sugars at different temperatures during the synthesis of rare sugars to increase the sweetness. Brazzein increases the sweetness of Rare sugars but not limited to D-Allulose, D-tagatose, D-Allose, Isomaltulose, Trehalulose, Sorbose, turanose, Leucrose, etc. The present invention further provides evaluation of non-nutritive sweeteners such as aspartame, acesulfame-K, Cyclamate, Neotame, Saccharin, Sucralose, Stevia etc., as each one has limitations for taste quality if used with Rare sugars. However, the use of Brazzein did not change the flavour and texture of the rare sugars and the taste profile matches the sucrose.

21: 2026/02958. 22: 2026/03/16. 43: 2026/10/23
51: H01F
71: SHANDONG XUNCHI ELECTRIC CO., LTD.
72: LIU, Mingguang, HUANG, Rushuai, LIU, Yushun, LI, Wei, GUO, Wentao, CHEN, Meiying, LI, Xianliang
33: CN 31: 202511442920.3 32: 2025-10-10
54: AUTOMATIC WINDING DEVICE FOR POWER TRANSFORMER PRODUCTION
00: -
The present application relates to the technical field of transformer winding devices, and discloses an automatic winding device for power transformer production. The automatic winding device comprises an outer frame, wherein a first motor is fixedly installed at a top end of the outer frame. This automatic winding device for power transformer production is provided with a winding support assembly capable of conveying and having an outer cylinder sleeved thereon. The provided side assembly can be used to dock and lock with the winding support assembly after the winding support assembly moves to a corresponding position. Then, the side assembly drives the winding support assembly and the outer cylinder to rotate, so as to wind the wire harness released from the wire harness placement cylinder. Moreover, the wire harness placement cylinder can be driven by the first motor to rotate the driving screw, then the wire harness placement cylinder can move slowly and uniformly on the driving screw. The winding requirements of various wire harnesses can be met simply by replacing and adjusting the pitch of the driving screw and the rotational speed of the first motor, thereby greatly increasing the applicable scope of the device.

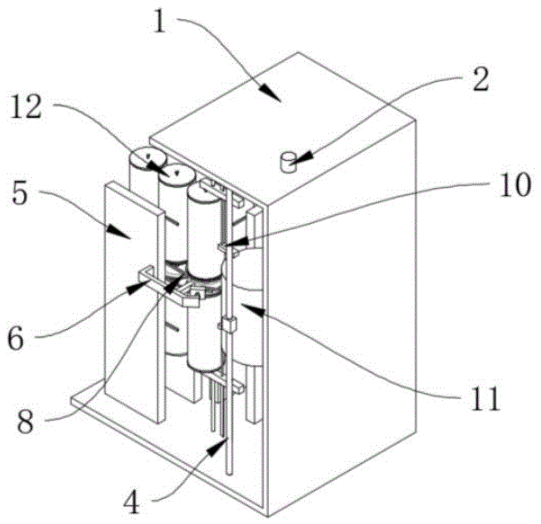

21: 2026/02959. 22: 2026/03/16. 43: 2026/11/03
51: G01M; G04F; H01F
71: SHANDONG XUNCHI ELECTRIC CO., LTD.
72: HUANG, Rushuai, LIU, Yushun, LIU, Mingguang, LI, Wei, ZHU, Heping, LIU, Fen, LI, Xianliang
33: CN 31: 202511910956.X 32: 2025-12-17
54: OIL LEAKAGE DETECTION DEVICE FOR TRANSFORMER OIL USED IN OIL-IMMERSED TRANSFORMER
00: -

The present application relates to an oil leakage detection device for transformer oil used in an oil-immersed transformer, belonging to the technical field of oil-immersed transformers. The oil leakage detection device comprises a detection box, wherein a push assembly for transporting transformers is arranged below a rear side of an inner wall of the detection box; a nitrogen delivery tank for nitrogen delivery is arranged on a right side of the detection box; a communication chamber for communication is formed on a left side above the inner wall of the detection box; and a sliding plate for sealed sliding is arranged at a center of an inner wall of the communication chamber. The device in the present application changes the traditional way of fixing with bolts. Although the operation is somewhat cumbersome, the device can greatly avoid the problem that the detection data is affected by over-tightening or under-tightening of bolts during the traditional bolt fixing process, and improve the accuracy of the device during the detection process. Moreover, the device uses the change of air pressure to push the reflecting assembly to move, so as to reflect whether the transformer oil leakage of the oil-immersed transformer is qualified, and further improve the convenience during detection.

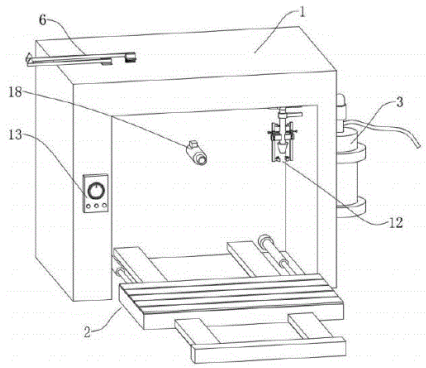

21: 2026/02961. 22: 2026/03/16. 43: 2026/11/03
51: B01D; H01F
71: SHANDONG XUNCHI ELECTRIC CO., LTD.
72: LIU, Mingguang, HUANG, Rushuai, LIU, Yushun, LI, Wei, GUO, Wentao, CHEN, Meiying, LI, Xianliang
33: CN 31: 202511649798.7 32: 2025-11-12
54: DRY-TYPE TRANSFORMER FOR SMART GRID
00: -

The present application discloses a dry-type transformer for a smart grid, and relates to the technical field of dry-type transformers. The dry-type transformer comprises an iron core body, wherein an upper positioning frame is arranged at a top end of the iron core body; a lower positioning frame is arranged at a bottom end of the iron core body; the iron core body is detachably connected to the upper positioning frame and the lower positioning frame; three low-voltage windings are sleeved on an outer side of the iron core body; a high-voltage winding is sleeved on each of the three low-voltage windings; a base is fixedly installed on a lower end surface of the lower positioning frame; a cooling fan is fixedly installed on the base; and a dust screen is fixedly installed on the cooling fan. In the present application, through the coordinated use of the cooling fan, the water cooling assembly and the auxiliary assembly, the heat dissipation efficiency of the dry-type transformer is improved, and equipment failures caused by overheating or uneven heat dissipation are avoided. Meanwhile, the dust screen is automatically cleaned to ensure continuous and

effective operation of the cooling fan, thereby guaranteeing long-term stable operation of the transformer and greatly improving the operational performance of the dry-type transformer.

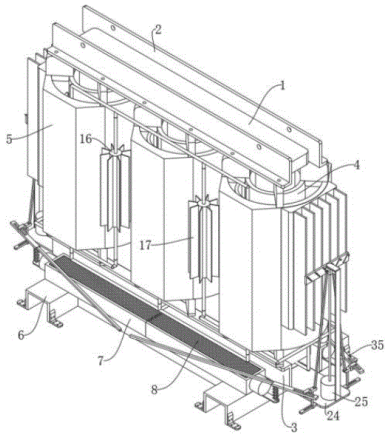

21: 2026/02962. 22: 2026/03/16. 43: 2026/10/23
51: G06F
71: HENAN UNIVERSITY OF URBAN CONSTRUCTION
72: HE Yawei, HAN Zongyuan
54: INTELLIGENT PRICING AND DYNAMIC REVENUE MANAGEMENT OPTIMIZATION SYSTEM
00: -
The present invention relates to the technical field of coordinated scheduling between charging stations and distribution networks, and provides an intelligent pricing and dynamic revenue management optimization system, including a state sensing and modeling module, a collaborative optimization and solution module, and a pricing synthesis and control module. The state sensing and modeling module collects basic state parameter data, calculates dynamic virtual boundaries, and transmits the dynamic virtual boundaries to the collaborative optimization and solution module. The collaborative optimization and solution module establishes a nonlinear programming problem constrained by the dynamic virtual boundaries, calculates an optimal control sequence, extracts Lagrange multipliers, and transmits control commands to the pricing synthesis and control module. The pricing synthesis and control module synthesizes a terminal dynamic pricing rate by combining a basic electricity price and the Lagrange multipliers, and issues the rate and optimal commands when a protection dead zone boundary is not triggered. The present invention realizes collaborative scheduling optimization of multiple devices and ensures the operational safety of underlying hardware of the system.

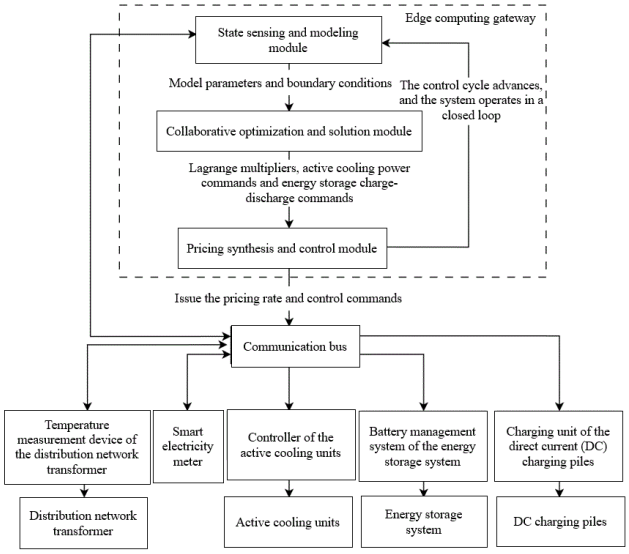

21: 2026/02964. 22: 2026/03/16. 43: 2026/10/23
51: H01M
71: KUNMING UNIVERSITY OF SCIENCE AND TECHNOLOGY
72: ZHOU Huangkai, YANG Keqiang, LI Linhui, ZHANG Yanjia, LIU Jintao, XIAO Jie, ZENG Xiaoyuan
33: CN 31: 2026101329748 32: 2026-01-30
54: LITHIUM-RICH CATION-DISORDERED ROCKSALT POSITIVE ELECTRODE MATERIAL AND PREPARATION METHOD AND APPLICATION THEREOF
00: -
The present invention discloses a lithium-rich cation-disordered rocksalt positive electrode material and its preparation method and application, belonging to the technical field of lithium-ion battery positive electrode material preparation. The method includes: mixing a lithium source, a vanadium source, and a titanium source according to a stoichiometric ratio of a general formula Li1+xVyTizO2; after wet grinding with ethanol and drying, pressing the mixture into a pure inorganic precursor green compact without adding a carbon source; clamping the green precursor compact between two carbon plates; utilizing Joule heat conducted by the external carbon plates to trigger a reaction; and executing multi-cycle short-time pulse heating to achieve ultra-fast high-temperature sintering. After the product is cooled, it

is composited with conductive carbon by ball milling to obtain a target positive electrode material. The material prepared by this method is highly consistent with traditional solid-state method products in terms of crystal structure, microscopic morphology, and electrochemical performance, and is an efficient, low-energy consumption alternative solution with great industrialization prospects.

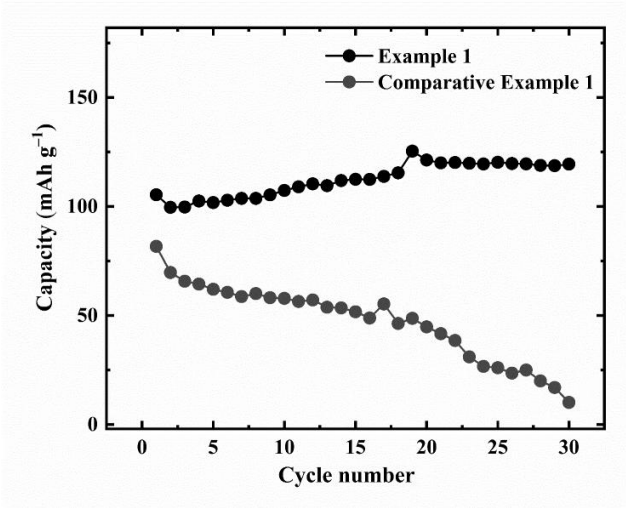

21: 2026/02966. 22: 2026/03/16. 43: 2026/10/23
51: A01G
71: Institute of Nanfan & Seed Industry, Guangdong Academy of Sciences
72: XIE Jing, WU Jiantao, CHANG Hailong, ZHANG Chuiming, CHENG Yinjie, CHEN Junlv, ZHOU Feng, LIU Zhuang, WU Qiwei

54: AN INTEGRATED DRIP IRRIGATION CULTIVATION METHOD FOR SUGARCANE

00: -

The present invention provides an integrated drip irrigation cultivation method for fruit cane, which relates to the field of fruit cane planting technology. The integrated drip irrigation cultivation method for fruit cane of the present invention includes six steps: selecting, processing and soaking seedlings, planting seedlings, applying base fertilizer and pesticides, drip irrigation cultivation, covering with plastic film, and setting wind resistant columns. The drip irrigation cultivation uses fruit cane seedling disinfectant and fruit cane drip irrigation fertilizer to carry out drip irrigation cultivation in an integrated drip irrigation system. The present invention effectively prevents and treats common diseases of sugarcane through the development of a seed disinfectant and drip irrigation fertilizer, combined with an integrated drip irrigation system, achieving precise control of water and fertilizer, and significantly improving sugarcane yield and quality.

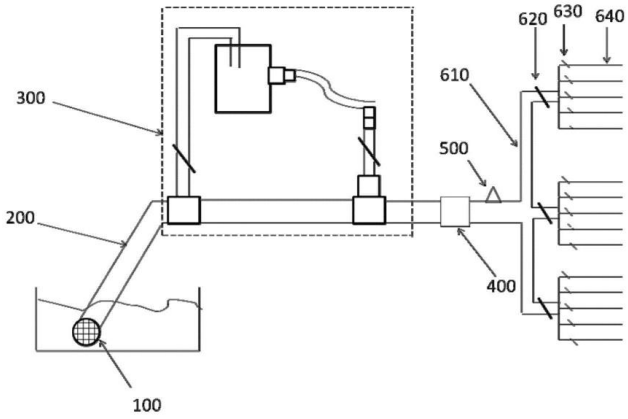

21: 2026/02994. 22: 2026/03/17. 43: 2026/10/23
51: H01M
71: KUNMING UNIVERSITY OF SCIENCE AND TECHNOLOGY
72: ZHANG Yanjia, TANG Luxin, ZHOU Huangkai, XIAO Jie, ZENG Xiaoyuan
33: CN 31: 2025116426623 32: 2025-11-11

54: NITROGEN-DOPED HARD CARBON SUITABLE FOR USE AS ANODE MATERIAL FOR SODIUM-ION BATTERIES AND PREPARATION METHOD THEREOF

00: -

The invention provides N-doped hard carbon usable as an anode material for sodium-ion batteries and a preparation method thereof, belonging to the technical field of biomass carbon and electrochemical energy storage. The invention first washes, dries, crushes and grinds waste biomass shells, pretreats the powder with sodium chlorite and acetic acid to obtain a first precursor, washes and dries the first precursor, mixes the washed and dried first precursor with a carboxyl-containing nitrogen source under the action of a crosslinking agent, performs drying and grinding treatment to obtain a second precursor, then pre-carbonizes the second precursor in a nitrogen atmosphere, and carbonizes the pre-carbonized second precursor in an argon atmosphere to obtain the N-doped hard carbon. The method is simple in process, low in cost, green and efficient, and the obtained material has high specific capacity and excellent rate performance, being suitable for high-performance sodium-ion battery anodes.

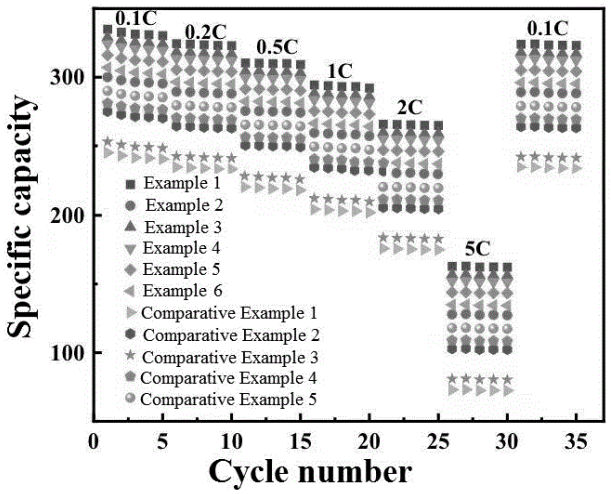

21: 2026/02995. 22: 2026/03/17. 43: 2026/10/23
51: B66B
71: Wuxi University
72: JIANG Xiaoyuan, ZHENG Yutong, XIE Minyu, XIE Yuxin

54: FIRE SAFETY RESCUE ELEVATOR

00: -

The invention belongs to the technical field of fire safety and emergency rescue, and in particular to a fire safety rescue elevator, which includes an electric trolley. a scissor-type lifting platform is arranged on the body of the electric trolley, a rotating mechanism is arranged on the platform of the scissor-type lifting platform, the output end of the rotating mechanism is connected with an extended platform, the extended platform comprises a supporting plate, a sliding plate is slidably connected to one side of the supporting plate, a driving assembly is arranged between the sliding plate and the supporting plate, the driving assembly is used for controlling the working position of the sliding plate on the supporting plate, and a lifting fence is further arranged on the sliding plate, the lifting fence is used for preventing personnel on the sliding plate from falling. The invention improves the accuracy and safety of rescue operations.

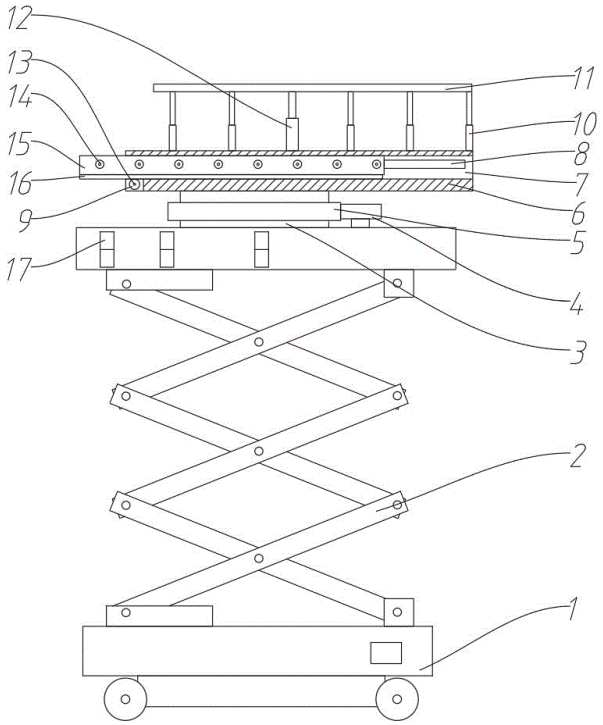

21: 2026/02996. 22: 2026/03/17. 43: 2026/10/23
51: A61K; G01N; A61P
71: Dr. Chiranjib Chakravartty, Dr. Manojit Bhattacharya, Anindita Sarkar, Argajit Sarkar, Dr. Surajit Bhattacharjee
72: Dr. Chiranjib Chakravartty, Dr. Manojit Bhattacharya, Anindita Sarkar, Argajit Sarkar, Dr. Surajit Bhattacharjee

54: A SYSTEM AND METHOD FOR DEVELOPING AND SIMULATING AN EFFECTIVE NEOANTIGEN MULTI-EPITOPIC COLORECTAL CANCER VACCINE

00: -

This invention relates to the field of computational immunoinformatics and bioinformatics for cancer vaccine design. The system comprises a user interface 101 and client application 102 that collect cancer-specific genomic, proteomic, and immunologic data transmitted via a network 103 to a processor 104 with memory 105 housing executable instructions. A vaccine development module 106 integrates an epitope identification module 202 utilizing machine learning to predict candidate 9-mer peptide epitopes, a vaccine formulation module 203 to concatenate epitopes with peptide linkers and adjuvant sequences, and a vaccine characterization module 204 including a structure validation submodule 205 and a physicochemical properties analysis submodule 206. Additionally, molecular

docking 207 with normal mode analysis 208 and an immune simulation profiling module 209 simulate binding and immunological responses for colorectal cancer.

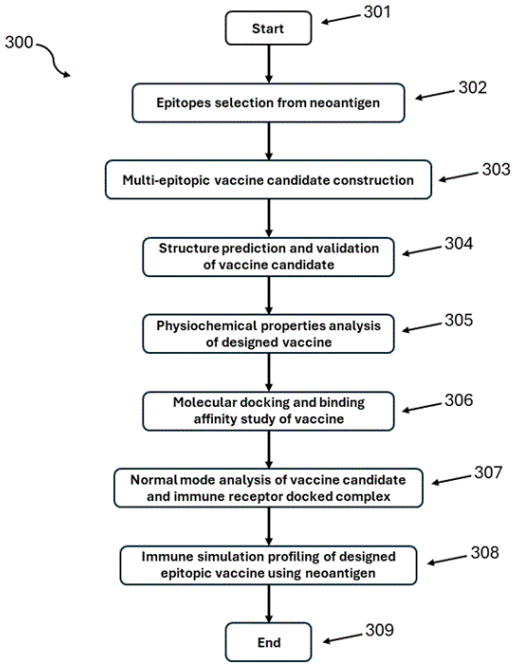

21: 2026/02997. 22: 2026/03/17. 43: 2026/10/23
51: B60L
71: Ligang Liu
72: Ligang Liu
54: HYBRID CHARGING NEW ENERGY VEHICLE
00: -
A new type of hybrid charging new energy vehicle, belonging to the technical field of new energy vehicles. It comprises a solar power generation device, a friction power generation device, a charging port, a first battery pack, a second battery pack, a third battery pack, a fourth battery pack, a transformer, and a current divider. It is also equipped with auxiliary components such as an emergency front-wheel drive, a central control console, and a cooling system. Each power generation and charging component is electrically connected to the transformer, supplying power through the current divider to the battery packs arranged in different zones. The power battery packs alternate charging and discharging, and the fourth battery pack is detachable for energy replenishment. This solution achieves efficient integration and utilization of multi-source electrical energy, extends battery service life, effectively solves the range limitation issue of new energy vehicles, and improves vehicle power supply stability and practical usability.

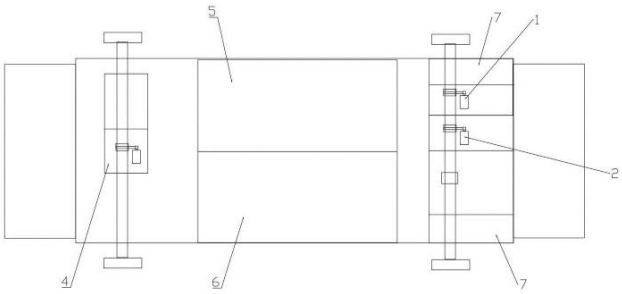

21: 2026/03003. 22: 2026/03/17. 43: 2026/10/23
51: F03D
71: GABRICI, Leonello
72: GABRICI, Leonello
33: IT 31: 102023000019914 32: 2023-09-27
54: WIND TURBINE
00: -
The present invention concerns a wind turbine (1) with a horizontal axis (X) which comprises a first rotor (13) having a center of rotation (130) and configured to rotate around a support rod (11) in a first direction of rotation arranged along an axis of rotation parallel to said horizontal axis (X), a second rotor (14) operatively coupled to said first rotor (13) and configured to rotate around said axis of rotation in said first direction of rotation, at least one further rotating member (15) operatively coupled to said support rod (11), a structure (3) having a first (33) and a second (34) vertical pillar sized to contain said first and second rotors, said at least one further rotating member (15) and said rod (11), a counter-rotation mechanism (12) arranged between said at least one further rotating member (15) and at least one of said first or second rotor, to invert the direction of rotation of said at least one further rotating member (15) with respect to said first and second rotors, said first rotor comprising a first plurality of blades (131), and said second rotor comprising a second plurality of blades (141), wherein said structure (3) comprises a conveyor (32) configured to convey the wind between a first blade (1ST, 14T) and a second blade (131", 141") of each of said plurality of blades, to modulate a rotation speed of at least one of said first and second rotor with respect to said at least one further rotating member (15).

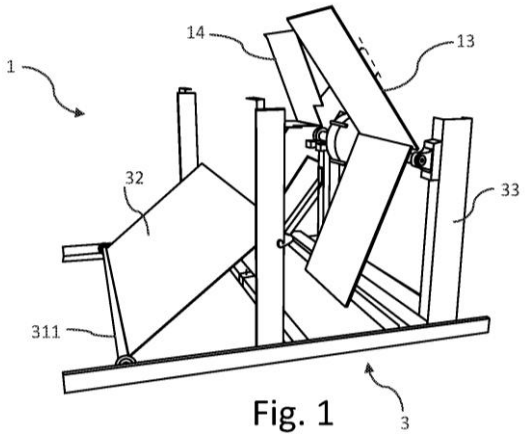

Fig. 1

21: 2026/03033. 22: 2026/03/18. 43: 2026/10/26
51: G06F
71: Jinggangshan University
72: LIU, Rui
54: AIGC-BASED DYNAMIC GENERATION SYSTEM FOR ENGLISH GRADED READING TEXTS
00: -
Disclosed is an artificial intelligence-generated content (AIGC)-based dynamic generation system for English graded reading texts, which relates to the technical field of natural language processing. The system includes a learner profile construction module, a graded prompt generation module, an AIGC core generation module, and a multi-dimensional adaptability optimization module which are connected in sequence. The present invention solves the technical problems of update lag and low personalization of traditional graded reading materials, thereby achieving real-time and dynamic matching between reading text difficulty and learner proficiency

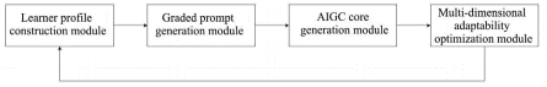

21: 2026/03034. 22: 2026/03/18. 43: 2026/10/26
51: G06F
71: Guangdong University of Petrochemical Technology
72: LIU, Haoran, CUI, Delong, MA, Ding, PENG, Zhiping, LI, Qirui, HE, Jieguang, QIU, Jinbo, LUO, Xinlong, LIN, Bao'an
54: FAULT DIAGNOSIS METHOD AND SYSTEM FOR OFFSHORE WIND TURBINES BASED ON MULTI- SOURCE HETEROGENEOUS TIME SERIES AND ONLINE UPDATE MECHANISM, AND MEDIUM
00: -
The present application discloses a fault diagnosis method and system for offshore wind turbines based on multi-source heterogeneous time series and an online update mechanism, and a medium. The method includes: constructing a dynamic spatiotemporal graph; inputting the dynamic spatiotemporal graph into a spatiotemporal graph neural network to obtain a deep feature of each node and a global deep feature of the dynamic spatiotemporal graph, and then inputting such features into a multi-level fault diagnosis network to determine a potential fault type and a confidence of each node, as well as a health state and a fault type of an entire offshore wind turbine, and generating a fault diagnosis report; and when the confidence is continuously less than a set threshold or conflicts with an alarm logic of a supervisory control and data acquisition (SCADA) system, triggering an online update mechanism, and regenerating the fault diagnosis report.

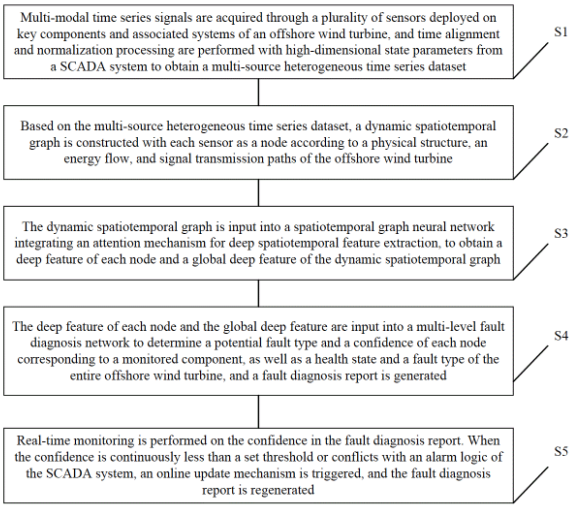

21: 2026/03035. 22: 2026/03/18. 43: 2026/10/26
51: G01D
71: Wuxi University
72: YUAN Pengpeng, HUANG Hui, DOU Chenlu, ZHANG Guqin
54: ENVIRONMENT MONITORING DEVICE
00: -
The present invention belongs to the technical field of environment monitoring, and in particular relates

to an environment monitoring device. The device comprises a housing, a cover plate rotatably connected to a top end of the housing, a plurality of wheels disposed at an outer bottom end of the housing, a driving mechanism fixedly connected to an inner bottom wall of the housing, a bottom end of a lifting mechanism rotatably connected to the driving mechanism, a top end of the lifting mechanism rotatably connected to a support plate, a fixing frame fixedly connected to a top end of the support plate, a clamping mechanism disposed on the fixing frame, and a monitor detachably mounted in the clamping mechanism. The present invention enables continuous environment monitoring.

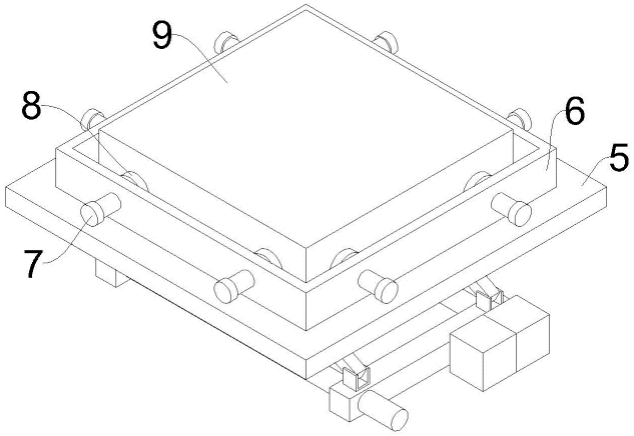

21: 2026/03037. 22: 2026/03/18. 43: 2026/10/26
51: G06N
71: Jinggangshan University
72: LIU, Rui, GAO, Fei

54: GENERATIVE AI-BASED ENGLISH SITUATIONAL DIALOGUE SIMULATION INTERACTIVE SYSTEM

00: -

Disclosed is a generative artificial intelligence (AI)-based English situational dialogue simulation interactive system, which relates to the technical field of natural language processing. The system includes a situation construction and management module, a user interaction interface module, a generative dialogue core engine, a situation feedback and analysis module, and a data storage module. The present invention combines situational AI simulation with real-time feedback to significantly enhance the immersion and relevance of English dialogue practice, and solves a problem that a traditional practice method is mechanical and rigid, thereby effectively improving learning efficiency and users' oral English proficiency.

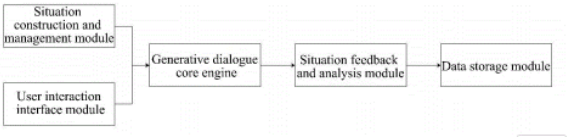

21: 2026/03038. 22: 2026/03/18. 43: 2026/10/26
51: G16H
71: QINGDAO UNIVERSITY OF TECHNOLOGY, BEIJING FENGLIN SOCIAL WORK DEVELOPMENT CENTER, PARTY SCHOOL OF XIAYI COUNTY COMMITTEE OF THE CPC
72: WANG, Chengcheng, YANG, Fan, LIU, Xu, XIA, Fengran

54: SCIENCE POPULARIZATION METHOD FOR NON PHARMACOLOGICAL CARE OF ELDERLY PEOPLE WITH COGNITIVE IMPAIRMENT IN THE COMMUNITY

00: -

Disclosed is a science popularization method for non pharmacological care of elderly people with cognitive impairment in the community comprising the steps based on cameras, obtain objects with cognitive impairments in elderly community activities and residences, and construct a database; based on the database, obtain the frequency of cognitive impairment in the elderly, calculate and count the frequency of cognitive impairment in the elderly, and based on the frequency calculation results, combined with the practical experience of caring for elderly people with cognitive impairment in the community, develop grading thresholds for classification, comprising low cognitive impairment, moderate cognitive impairment, and high cognitive impairment. The present invention customizes differentiated science popularization programs for low/medium/high cognitive impairment groups based on the frequency of obstacles combined with practical experience grading, adapting to the cognitive acceptance ability and care focus of elderly people with different levels of obstacles.

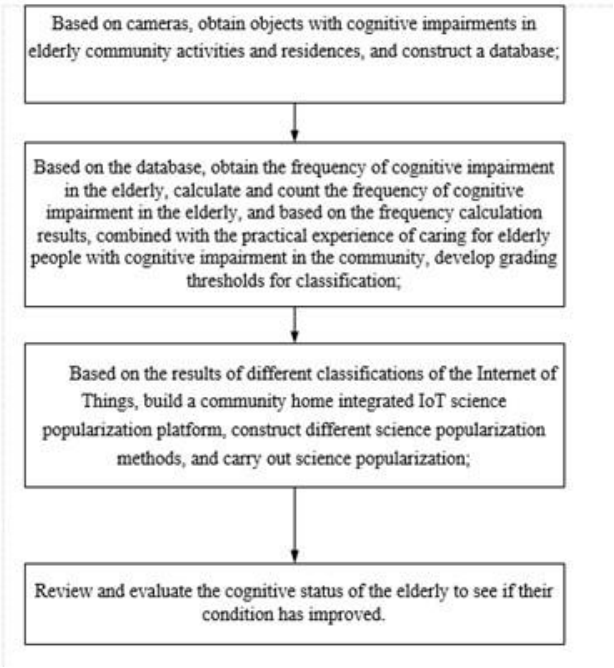

21: 2026/03039. 22: 2026/03/18. 43: 2026/10/26
51: G09B
71: NINGBO UNIVERSITY OF FINANCE & ECONOMICS
72: ZHU, Muxiu, ZHANG, Xianjiu, ZHOU, Kaige, LIU, Hong

54: SIMULATION DEMONSTRATION DEVICE FOR THE DIGITAL EFFECTIVENESS OF TRADITIONAL INDUSTRIES

00: -

Disclosed is a simulation demonstration device for the digital effectiveness of traditional industries, and improves the problem of inconvenient rapid adjustment of display height and angle. The device comprises a base, wherein the bottom of the inner cavity of the base is provided with a lifting mechanism, and the top of the lifting mechanism is fixedly connected to a protective box. The present invention achieves parallel simulation demonstrations of two industrial modes in the same temporal and spatial dimension by setting a traditional mode demonstration disk and a digital mode demonstration disk. By setting a drive motor, a driving gear, and a driven gear, the column and the bearing plate can be horizontally rotated, making it easy for the operator to adjust the orientation of the traditional mode demonstration disk and the digital mode demonstration disk according to the different directions of the audience.

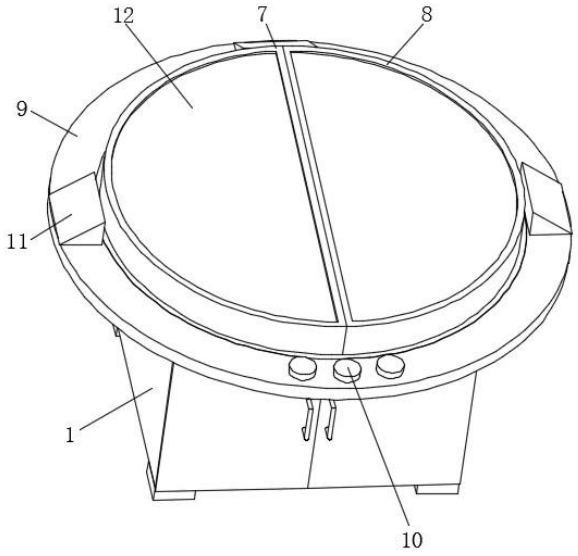

21: 2026/03040. 22: 2026/03/18. 43: 2026/10/26
51: A61G
71: HUZHOU THIRD MUNICIPAL HOSPITAL
72: ZHANG, Na

54: PSYCHIATRIC TRANSFER BED WITH LIMB ASSISTED FIXATION FUNCTION

00: -

The present invention relates to the field of medical auxiliary equipment technology and discloses a psychiatric transfer bed with limb assisted fixation function, comprising a transfer bed. The left side of the top of the transfer bed is provided with a head limit component, and the right side of the top of the transfer bed is slidably connected with a foot limit component. The back of the transfer bed is fixedly connected with a first electric push rod, and the telescopic end of the first electric push rod is fixedly connected with an adjustment box. The present invention achieves all-round fixation of multiple parts of the patient, including the head, hands, belly and crotch, and legs, through the coordinated cooperation of head limit components, foot limit components, and belly and crotch limit components. This effectively prevents the patient from breaking free during agitation and ensures safe transportation. The first electric push rod, second electric push rod, third electric push rod, and adjustment motor are used as electric components. Medical staff can quickly adjust and position the fixing devices of various parts by controlling the switch, greatly reducing operation time and minimizing the risk of direct contact with the patient.

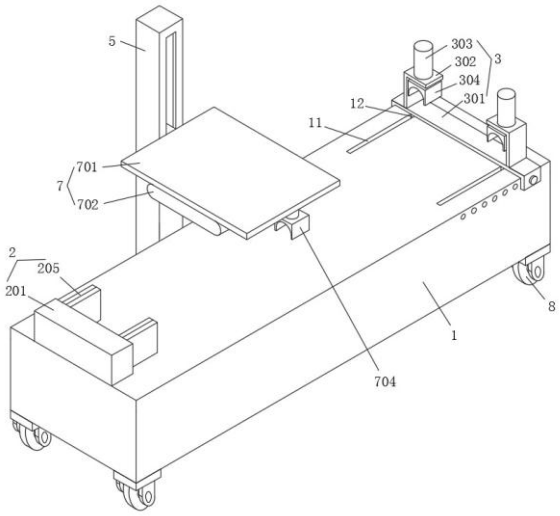

21: 2026/03044. 22: 2026/03/18. 43: 2026/10/26
51: G05G; G06C; G06F
71: AZOTEQ HOLDINGS LIMITED
72: RADEMEYER, Daniel Barend, DU TOIT, Riaan, WOLMARANS, Wikus
54: CAPACITIVE SENSING STRUCTURE
00: -
A capacitive sensing structure is disclosed, which may be used to replace mechanical switches in user input devices such as keyboards. It improves upon the expected lifetime of the key switches, adds proximity functionality and the ability of liquid rejection with a single sensor structure that is low-cost and robust.

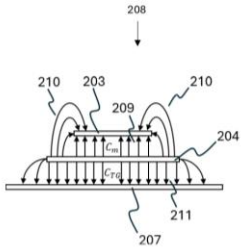

21: 2026/03045. 22: 2026/03/18. 43: 2026/10/26
51: G06F
71: VISHWAKARMA INSTITUTE OF TECHNOLOGY
72: CHAVAN, Rohini Abhijeet, RAJPUT, Vaishali Sham, VIHIRKAR, Jay Sharadrao, BRADOO, Vivaan, YEOKAR, Suyash Sanjay
54: A WEARABLE HAPTIC BAND FOR OBSTACLE DETECTION AND PROVIDING TACTILE FEEDBACK FOR VISUALLY IMPAIRED USERS
00: -
The present invention is related to a wearable haptic band for obstacle detection and providing tactile feedback for visually impaired users. The device uses VL53L0X and ultrasonic sensors interfaced with a microcontroller that runs a threshold-based algorithm to activate a vibration motor via a transistor driver. The system detects obstacles within 30–120 cm with 95 % accuracy and offers real-time vibration feedback with 30–40 ms latency. The invention ensures hands-free, silent operation, long battery life, and cost-effective construction for daily use.

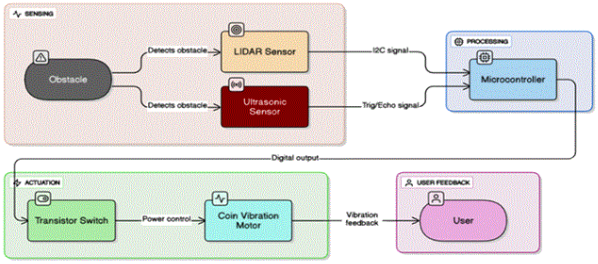

21: 2026/03046. 22: 2026/03/18. 43: 2026/10/26
51: B25J
71: VISHWAKARMA INSTITUTE OF TECHNOLOGY
72: PENDSE, Esha Mandar, SAPKAL, Vaibhav Anil, SANGALE, Suyog Sudam, DESHPANDE, Pallavi, RATNAPARKHI, Archana, GHULE, Gauri
54: A VOICE-BASED DIRECTION DETECTING ROBOTIC SYSTEM
00: -
The present invention is related to a voice-based direction detecting robotic system. The invention relates to a mobile-app–controlled voice command robot equipped with a camera-based intruder detection system. The robot receives voice commands through a smartphone application, which are converted into control signals and transmitted via a Bluetooth module to the Arduino Uno microcontroller. The microcontroller processes the commands in real time and drives the L298N motor driver to control the robot's DC motors, enabling smooth movement and directional control. For security applications, an ESP32-CAM module continuously monitors the surroundings, performing real-time face and motion detection. Upon detecting an intruder, the system triggers an audible alarm via a buzzer and can optionally capture images for monitoring. The design is compact, self-contained,

and energy-efficient, eliminating the need for external computing or cloud-based processing. This system finds applications in service and hospitality robotics, home and industrial security, assistive and healthcare robotics, and educational platforms, offering a versatile, interactive, and intuitive human–robot interface that combines mobile voice control with autonomous surveillance capabilities.

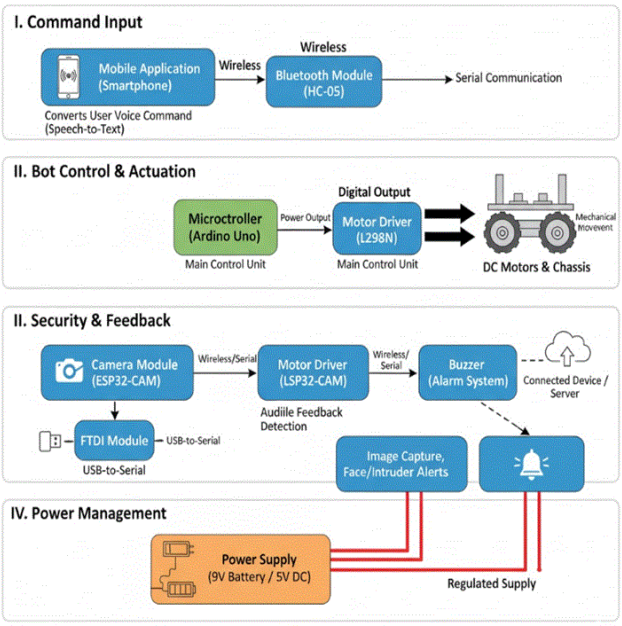

21: 2026/03047. 22: 2026/03/18. 43: 2026/10/26
51: G06F
71: VISHWAKARMA INSTITUTE OF TECHNOLOGY
72: JAGDALE, Vinit Vijay, KHANAJ, Tejas Parmanand, TEKE, Omshree Rahul, UDGAVE, Harsh Pravin, CHAVAN, Rohini, NAVGHANE, Ashwini

54: AN AUTOMATED, AI-ENABLED BACKGROUND REMOVAL SYSTEM FOR DIGITAL IMAGES

00: -

The present invention is related to an automated, AI-enabled background removal system for digital images. The invention includes safe authentication of users, efficient processing on the backend, and seamless connectivity through APIs. The program leverages the Clipdrop API to execute non-manual background extraction and quality segmentation. Fair use and revenue are guaranteed by a credit-based transaction model powered by a Clerk-based JSON Web Token system for user authentication and session management, using the Razorpay payment gateway. The invention's responsive and user-friendly design attests to the work of these tools, though the frontend is created with React.js and Tailwind CSS. The backend, developed using Spring Boot and Feign clients, is responsible for all data operations and integrations with third-party services. MySQL is responsible for managing user profiles, transaction records, and metadata of processed images in persistent storage. Experimental results prove that the integration of AI services with scalable web technologies enables an automated, safe, and accessible solution for e-commerce, digital marketing, and creating original content.

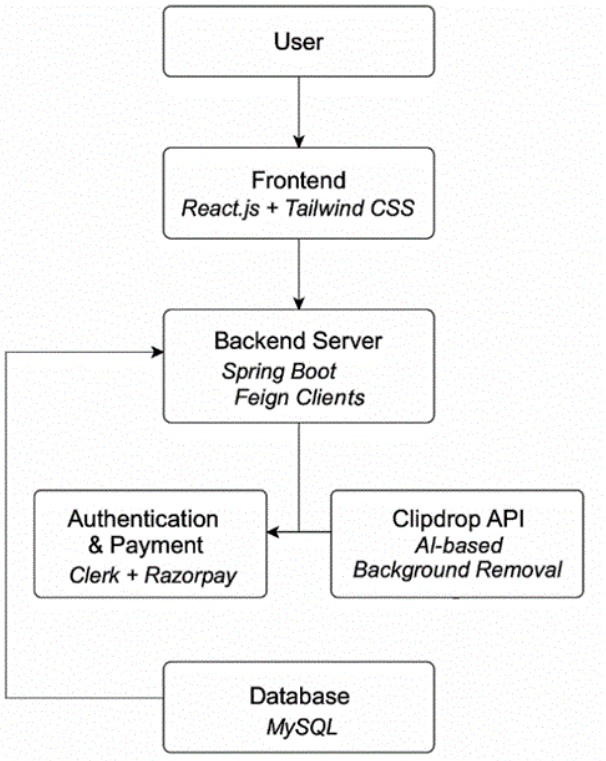

21: 2026/03048. 22: 2026/03/18. 43: 2026/10/26
51: G01R
71: VISHWAKARMA INSTITUTE OF TECHNOLOGY
72: BHOSALE, Sai Suhas, SABLE, Ajinkya Amol, SHINDE, Prathmesh Pradeep, RATNAPARKHI, Archana, DESHPANDE, Pallavi, GHULE, Gauri, PATIL, Deepak, KHUMBHAR, Prathmesh

54: AN ADVANCED CIRCUIT BREAKER SIMULATION SYSTEM FOR PROTECTION RELAY TESTING AND BREAKER OPERATION TRAINING

00: -
The present invention is related to an advanced circuit breaker simulation system for protection relay testing and breaker operation training. The circuit breaker simulation system is a low-voltage yet highly realistic training and testing invention that replicates the electrical, mechanical, and timing characteristics of real circuit breakers. It simulates tripping and closing operations, auxiliary and main contacts, contact bounce, contact travel, and selectable coil currents. The system supports up to six independent timing contacts, allowing users to study complex breaker behavior without the risks associated with high-voltage equipment. This invention is well-suited for educational institutions, relay testing laboratories, and power system training programs.

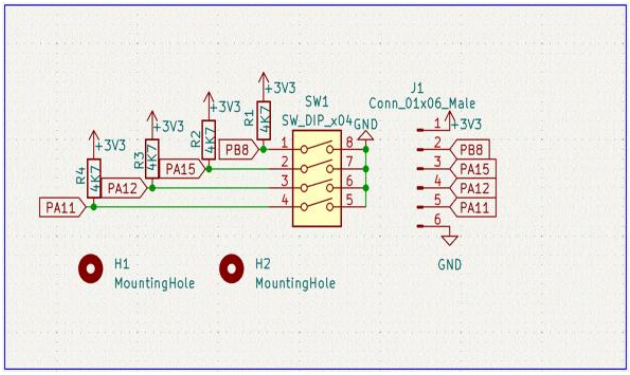

21: 2026/03049. 22: 2026/03/18. 43: 2026/10/26
51: H04L
71: VISHWAKARMA INSTITUTE OF TECHNOLOGY
72: MOGHE, Rudrakshi Himanshu, SAID, Saumitra Devidas, SARODE, Sarthak Kiran, RATNAPARKHI, Archana, DESHPANDE, Pallavi, GHULE, Gauri

54: A DUAL NETWORK MOTOR AUTOMATION SYSTEM WITH POWER CONSUMPTION MONITORING

00: -
The present invention is related to a dual network motor automation system with power consumption monitoring. In this invention, the microcontroller and energy monitor system will be based on the ESP32 microcontroller with a SIM7600E 4G LTE module, ACS712 current sensor, and a relay. It also allows remote operation of the motors by use of phone calls, SMS and local web interface to allow one to start and stop the motor as well as to schedule the motor run time at their convenience. The system constantly monitors the amount of current passing through it to determine power used, provide data on energy used daily, weekly and monthly, and provides the data in graphic format to analyze and bill automatically. This solution is developed to work in industries and on farms to improve efficiency in operations, allow remote control, and save energy in the settings where the manual control is challenging or expensive.

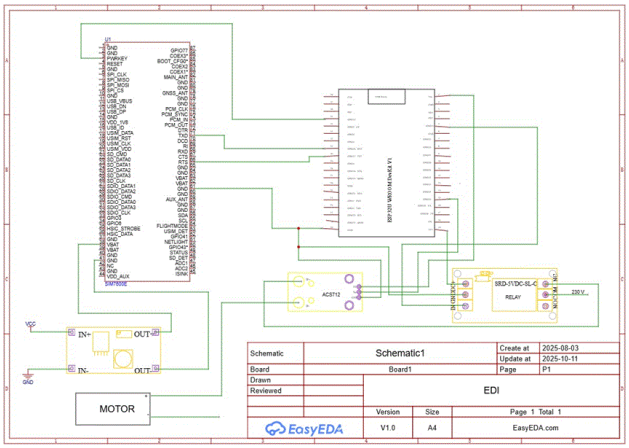

21: 2026/03050. 22: 2026/03/18. 43: 2026/10/26
51: G01N
71: Hangzhou Institute for Food and Drug Control(Hangzhou Center for Adverse Drug and Medical Device Reaction Monitoring)
72: WU Xun, ZHANG Jiafeng, SHEN Guofang, DU Lidan, LIU Yuwen

54: METHOD FOR DIRECT LIQUID CHROMATOGRAPHY-TANDEM MASS SPECTROMETRY DETECTION OF PUBERULIC ACID WITHOUT DERIVATIZATION

00: -
Disclosed is a method for direct liquid chromatography-tandem mass spectrometry (LC-MS/MS) detection of puberulic acid without derivatization, including the steps of sample pretreatment and direct LC-MS/MS detection, without any derivatization of puberulic acid throughout the entire process. The present invention relates to the technical field of analytical detection. With this method, direct detection of puberulic acid is achieved without derivatization. By incorporating methylenediphosphonic acid into an extraction solvent, a dilution solvent, and a mobile phase, adsorption of puberulic acid onto instrument tubing and chromatographic columns is effectively eliminated, resolving the technical challenge of weak MS signals in direct detection. Compared to

traditional derivatization-based methods, the pretreatment procedure is simplified, detection efficiency is improved by over 50%, and the use of derivatization reagents is avoided, reducing experimental errors and operational safety risks.

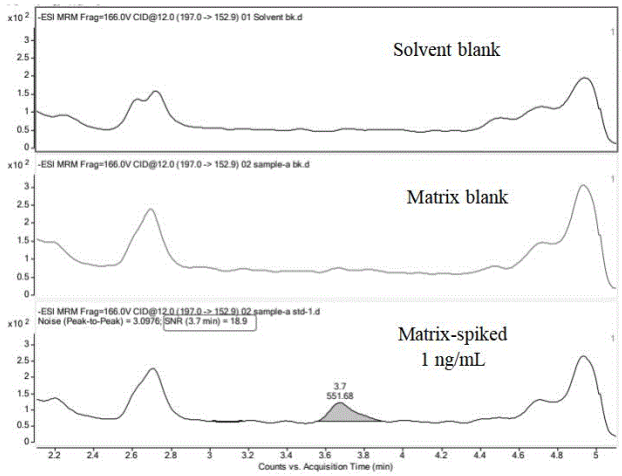

21: 2026/03051. 22: 2026/03/18. 43: 2026/10/26
51: E02B
71: VISHWAKARMA INSTITUTE OF TECHNOLOGY
72: CHAVAN, Rohini Abhijeet, BHAGWAT, Smita, SOMASE, Sairaj Dashrath, ZUNJE, Omkar Avinash, YERULE, Shreyas Shivanand, WASULE, Mangalya Narayan

54: AN ESP32-BASED RIVER CLEANING SYSTEM WITH CONVEYOR MECHANISM FOR FLOATING WASTE REMOVAL

00: -

The present invention is related to an ESP32-based river cleaning system with conveyor mechanism for floating waste removal. The invention is a semi-autonomous water surface cleaning robot designed to remove floating waste such as plastics, leaves, and debris from water bodies. It operates using an ESP32 microcontroller that provides wireless control through built-in Wi-Fi and Bluetooth connectivity. The system includes DC motors with propellers for navigation, a conveyor belt mechanism for waste collection, and a rechargeable battery as its power source. The lightweight sunboard structure ensures buoyancy and portability, while the automated operation reduces human effort and promotes environmental sustainability. This invention provides a low-cost, efficient, and eco-friendly solution for maintaining clean and healthy water resources.

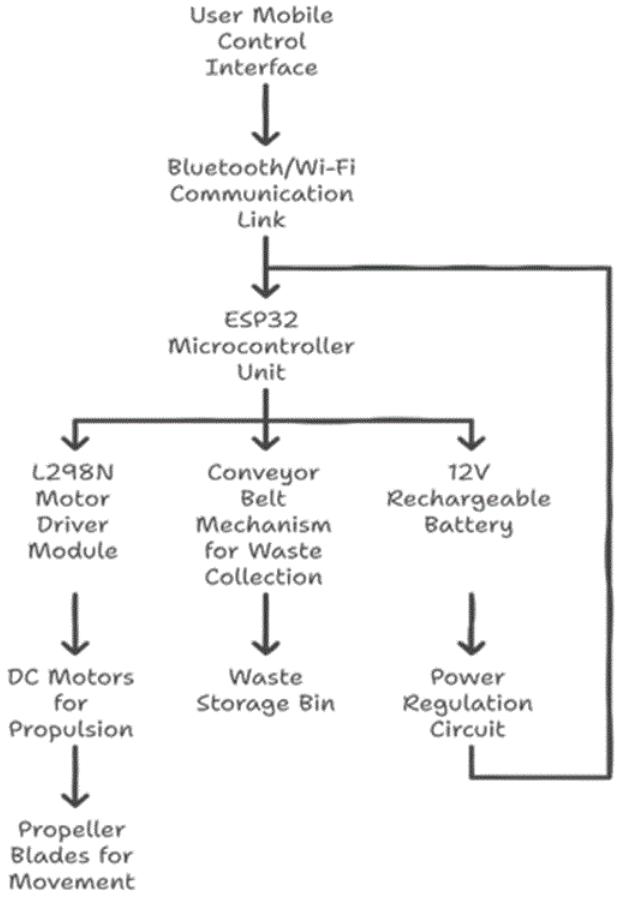

21: 2026/03052. 22: 2026/03/18. 43: 2026/10/26
51: G01S
71: VISHWAKARMA INSTITUTE OF TECHNOLOGY
72: CHAVAN, Rohini Abhijeet, RAJPUT, Vaishali Sham, WAKCHAURE, Aaditya Vasant, WAGDALE, Yogiraj Dhanraj, WAKHURE, Parth Pradeep

54: AN AI-POWERED ROVER FOR METAL DETECTION AND SOIL SAMPLING

00: -

The present invention is related to an AI-powered rover for metal detection and soil sampling. The invention presents an AI-powered rover capable of metal detection and soil sampling using an electromagnet and gripper mechanism. The rover employs a passive PVC-based suspension system that adapts to uneven terrain without requiring active servos, thus reducing cost and complexity. The rover automatically detects metals, stops movement, collects samples, and resumes motion under AI-based control. Designed for low-cost lunar surface simulation, it serves as a scalable educational and

research tool for resource identification and planetary surface exploration.

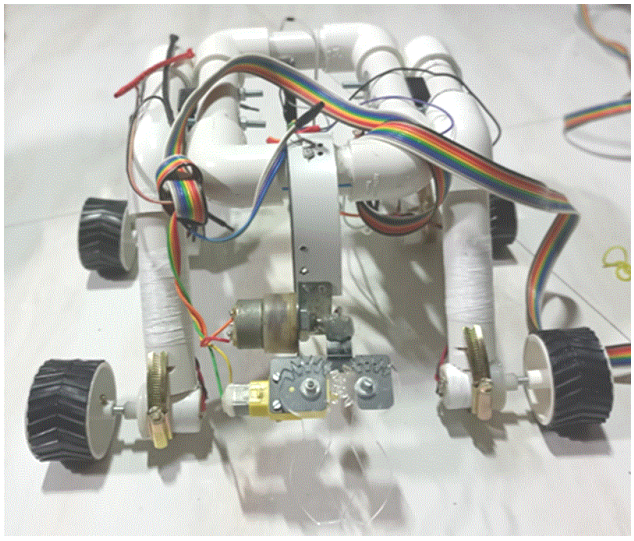

21: 2026/03053. 22: 2026/03/18. 43: 2026/10/26
51: B81B
71: Guangxi University
72: AYANTOBO Olusola Olaitan, WEI Jiahua, ZHANG Shengjun, XING Yufei

54: REAL-TIME MONITORING SYSTEM FOR ATMOSPHERIC RIVER WATER VAPOR TRANSPORT BASED ON QUANTUM SENSING AND INTERNET OF THINGS

00: -

The present invention relates to the technical field of atmospheric river monitoring and provides a real-time monitoring system for atmospheric river water vapor transport based on quantum sensing and Internet of Things (IoT). The system includes: a quantum sensing module, configured to construct sensors to acquire core monitoring parameters of an atmospheric river; an IoT access module, configured to transmit the core monitoring parameters of the atmospheric river to a data fusion module; the data fusion module, configured to fuse the core monitoring parameters of the atmospheric river with radar monitoring data, satellite monitoring data, and meteorological observation data to construct a multi-dimensional monitoring dataset; an identification and analysis module, configured to construct an atmospheric river identification model, output an atmospheric river intensity index, and determine an atmospheric river path and an affected area thereof; and a visualization and early warning module, configured to display prediction results and issue early warning signals under abnormal conditions. The system solves the problems of significant variations in path direction and impact boundaries, as well as the inability to precisely delineate the spatial boundaries of affected zones of different intensity levels.

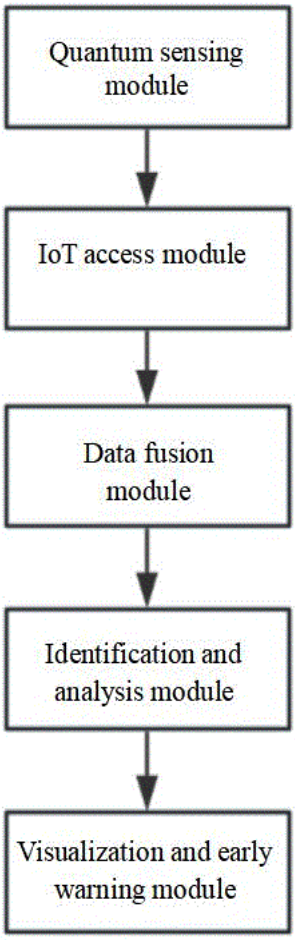

21: 2026/03054. 22: 2026/03/18. 43: 2026/10/26
51: G06Q
71: VISHWAKARMA INSTITUTE OF TECHNOLOGY
72: BHAGWAT, Smita, CHAVAN, Rohini, GUPTA, Pragati, HANDE, Anvay, JADHAV, Hari, GOYANKA, Devansh, HADE, Vaibhav

54: A COMPREHENSIVE BLOOD DONATION MANAGEMENT SYSTEM

00: -

The present invention is related to a comprehensive blood donation management system. The invention is an AI-powered, cloud-based blood donation management system designed to optimize donation, storage, and distribution processes. It employs

Artificial Intelligence for predictive matching of donors and recipients, Blockchain for secure record-keeping, and IoT devices for monitoring blood storage conditions in real-time. It automates donor registration, eligibility verification, appointment scheduling, and communication while managing blood stock in hospitals and providing analytical reporting. Its AI engine prioritizes donor availability during emergencies, and it uses blockchain for tamper-proof donation tracking and donor rewards through smart contracts. This system aims to enhance efficiency, transparency, and reliability in blood donation operations, applicable in hospitals and healthcare organizations.

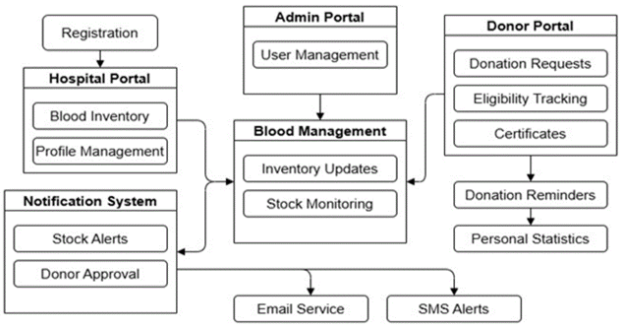

21: 2026/03081. 22: 2026/03/19. 43: 2026/10/26
51: E02B
71: China University of Mining and Technology
72: Shao Jiang, Cao Wenjing, Jiang Shangsong, Zhang Peiyao, Lou Xuanfu, Chen Zhiyong, Ma Guoping, He Xinjian, Li Shihang, Zhu Jintuo
33: CN 31: 2025119922606 32: 2025-12-26
54: AN INTEGRATED DEVICE FOR HARVESTING, DEWATERING, AND CLOSED-LOOP RECOVERY OF PRESSED LIQUID FROM ENTEROMORPHA
00: -
The present invention discloses an integrated device for the harvesting, dewatering, and closed-loop recovery of Enteromorpha, comprising a double-roller traction mechanism, a conveying mechanism, a dewatering and volume reduction mechanism, and a liquid treatment and recovery mechanism. The double-roller traction mechanism efficiently harvests Enteromorpha through wide-mouth suction and double-roller traction; the conveying mechanism uses a shaftless screw conveyor to prevent entanglement while performing preliminary dewatering; the dewatering and volume reduction mechanism achieves initial solid-liquid separation by combining screw extrusion dewatering with an optimized screen, producing formed algae cakes and pressed liquid; the liquid treatment and recovery mechanism utilizes a drum screen to remove residues from the pressed liquid, and after buffering and pressure stabilization, a reverse osmosis membrane module separates the liquid into freshwater and concentrated nutrient solution, realizing water reuse and nutrient resource recovery. This integrated device enables continuous full-process handling of Enteromorpha, features strong anti-entanglement performance and significant dewatering and volume reduction effects, and combines environmental protection with resource recovery value, making it suitable for large-scale emergency handling of Enteromorpha blooms and resource utilization scenarios.

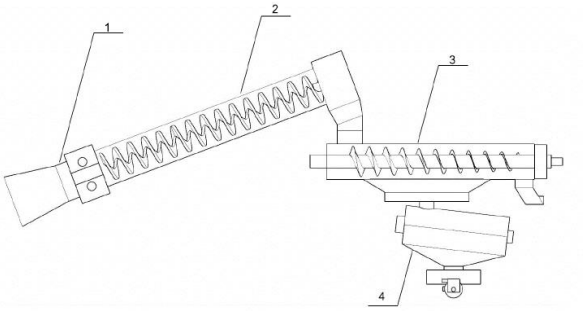

21: 2026/03082. 22: 2026/03/19. 43: 2026/10/26
51: A61B
71: Anhui University of Chinese Medicine
72: Xiao Wang, Zheyuan Xia, Leran Tang, Haoxian Du, Shuang Yu, Yuxiang Guan, Jinglin Wang
54: PERSONALIZED OBESITY WEIGHT LOSS EFFECTIVENESS TRACKING AND EVALUATION SYSTEM
00: -
A personalized obesity weight loss effectiveness tracking and evaluation system, which belongs to the technical field of weight loss. The system adopts a cloud-edge-end collaborative architecture, comprising a data layer, a core layer, and an application layer. The data layer collects multi-source data through smart hardware, a client application, and a hospital system integration module, and is paired with an encrypted transmission module and an edge node preprocessing module to ensure security and efficiency. The algorithm engine in the core layer incorporates machine learning models and neural network models to achieve personalized goal

generation and plan adjustment, while the evaluation module quantifies effectiveness across multiple dimensions. The application layer addresses the needs of various user types, enhancing user experience and system stability. This system addresses the shortcomings of traditional weight loss tools, enables precise tracking and scientific evaluation, and facilitates personalized weight loss.

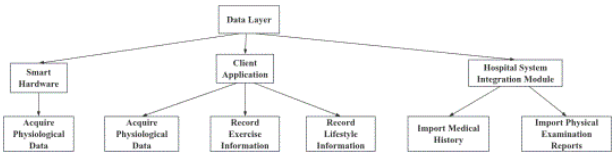

21: 2026/03083. 22: 2026/03/19. 43: 2026/10/29
51: G06F
71: Guangdong University of Petrochemical Technology
72: XU, Qing, CUI, Delong, PENG, Zhiping, LI, Qirui, HE, Jieguang, QIU, Jinbo, LUO, Xinlong, LIN, Bao'an
33: CN 31: 202511322152.8 32: 2025-09-16

54: MULTI-MODAL COLLABORATION-BASED FAULT DIAGNOSIS METHOD AND SYSTEM FOR OFFSHORE WIND TURBINE GEARBOX

00: -

Disclosed is a multi-modal collaboration-based fault diagnosis method and system for an offshore wind turbine gearbox. The method includes: collecting time domain signals of a plurality of several sensors; preprocessing the time domain signals to obtain a spectrogram; performing block division on the spectrogram to obtain local blocks, and performing spatial downsampling processing on the local blocks to obtain a downsampled input feature map; extracting features from the input feature map via a cascaded heterogeneous convolution channel, and fusing the features to obtain an initial fused feature; performing multi-scale feature extraction and fusion processing on the initial fused feature to obtain a multi-scale fused feature; constructing a spatial reconstruction module, and processing, by the spatial reconstruction module, the multi-scale fused feature by utilizing an adaptive gate threshold to obtain enhanced features; and classifying the enhanced features to obtain a fault classification result of the wind turbine gearbox.



21: 2026/03084. 22: 2026/03/19. 43: 2026/10/26
51: B08B
71: Huadian Yili Coal and Power Co., Ltd.
72: Teng Cao, Haiqiang Ma, Lizhi Cui

54: FURNACE-TOP MOUNTED COKING CRUSHING AND CLEANING DEVICE

00: -

A furnace-top mounted coking crushing and cleaning device, the device comprises a hoisting gantry assembly, a multi-degree-of-freedom actuator, an acoustic-mechanical coupled crushing assembly, and an intelligent interlock control unit; the hoisting gantry assembly is fixed to a furnace wall at the top of the furnace. The multi-degree-of-freedom actuator is slidably connected to the hoisting gantry assembly, the acoustic-mechanical coupled crushing assembly is disposed on a terminal mounting seat of the multi-degree-of-freedom actuator., the intelligent interlock control unit is electrically connected to each functional component; through a three-layer progressive technical architecture, the invention sequentially achieves full-area, blind-spot-free online cleaning of coking at the top of the furnace, efficient collaborative coking removal via acoustic-mechanical coupling, and intelligent interlocking closed-loop control integrated with existing coking treatment systems, the device can be seamlessly connected to a visual coking analysis and determination system for the furnace, and is suitable for online coking cleaning and prevention operations in various types of coal-fired power plant boilers.

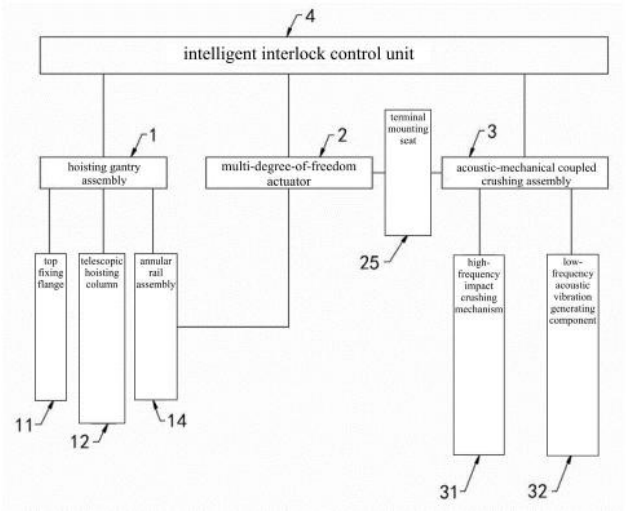

21: 2026/03085. 22: 2026/03/19. 43: 2026/10/26
51: A61B
71: Anhui University of Chinese Medicine
72: Zheyuan Xia, Huiling Zhang, Xiang Wang, Shuang Yu, Yuxiang Guan, Ting Yao, Qiao Hu, Yudie Wang, Fengni He

54: MULTI-DIMENSIONAL HYPERTENSION DATA ACQUISITION SYSTEM AND INTELLIGENT INTERVENTION METHOD THEREOF

00: -

A multi-dimensional hypertension data acquisition system and an intelligent intervention method thereof, belonging to the technical field of hypertension management. The multi-dimensional hypertension data acquisition system includes a terminal layer, a data processing layer, and a security module. The terminal layer collects basic data and clinical data to form a multi-dimensional dataset. The data processing layer preprocesses the data and analyzes it through a risk prediction model. The security module ensures data security and traceability. The intelligent intervention method is based on the aforementioned system and initiates a three-level intervention after data collection and analysis. This solution achieves multi-dimensional data acquisition and personalized intervention, enhancing the precision and efficiency of hypertension management while complying with medical data regulatory requirements.

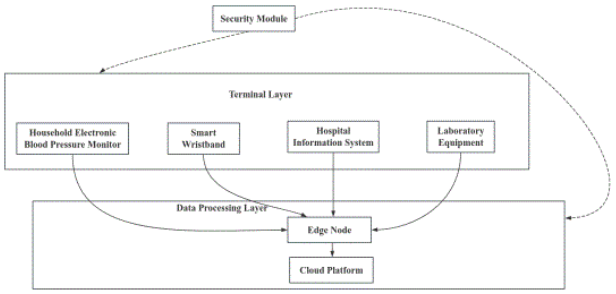

21: 2026/03086. 22: 2026/03/19. 43: 2026/10/26
51: A61B
71: Anhui University of Chinese Medicine
72: Xiao Wang, Kecui Hu, Leran Tang, Haoxian Du, Yuxiang Guan, Juan Yuan, Sijing Peng, Jinglin Wang

54: ARTIFICIAL INTELLIGENCE-BASED ARTHRITIS REHABILITATION TRAINING SYSTEM AND EFFICACY ASSESSMENT METHOD

00: -

An artificial intelligence-based arthritis rehabilitation training system and an efficacy assessment method, the system comprises a hardware part and a software part, the hardware part includes a depth camera, a pressure sensor, and a smart wearable device, the software part includes a data collection module, a training planning module, and an efficacy assessment module. The data collection module collects patient data to build a rehabilitation database, the training planning module generates personalized training plans and corrects action deviations in real time, the efficacy assessment module performs assessments by combining objective indicator data and subjective indicator data, and also supports remote monitoring by medical staff. This solution achieves personalized training and precise assessment, improves rehabilitation safety and efficiency, and enhances the patient rehabilitation experience.

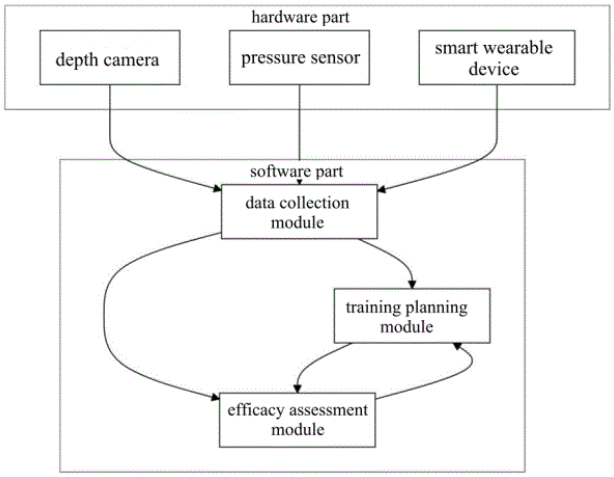

21: 2026/03087. 22: 2026/03/19. 43: 2026/10/26
51: A61B
71: Anhui University of Chinese Medicine
72: Zheyuan Xia, Yukuan Miao, Xiao Wang, Hui Shi, Yuxiang Guan, Ruixi Ma, Haoxian Du, Jinglin Wang
54: INTELLIGENT EARLY WARNING SYSTEM FOR FALL RISK BASED ON ENVIRONMENTAL INTERACTION BEHAVIOR OF THE ELDERLY
00: -
An intelligent early warning system for fall risk based on environmental interaction behavior of the elderly, the system comprises a sensing layer, a transmission layer, an analysis layer, and an early warning and linkage layer, which are sequentially connected in communication. The sensing layer includes multiple devices such as millimeter-wave radar and high-definition network cameras, enabling comprehensive data collection and supporting a low-power mode; the transmission layer employs hybrid networking and edge gateways to achieve efficient data transmission; the analysis layer performs risk analysis and rating through an edge-cloud collaborative computing architecture; the early warning and linkage layer includes multi-level response mechanisms and a self-check module. The system can accurately identify fall risks, balances privacy protection with multi-scenario adaptability, achieves early warning and intervention, ensures the safety of the elderly, and reduces maintenance costs.

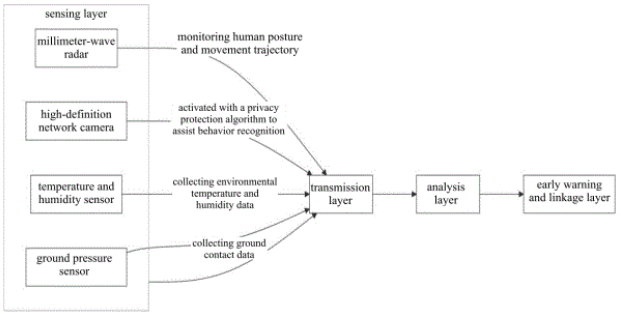

21: 2026/03088. 22: 2026/03/19. 43: 2026/10/26
51: A61B
71: Anhui University of Chinese Medicine
72: Xiang Wang, Miaomiao Li, Qiao Hu, Ting Yao, Xianqing Yang, Yanyan Shao, Yuxiang Guan
54: INTELLIGENT MONITORING SYSTEM FOR SYSTEMIC SCLEROSIS SKIN CARE
00: -
An intelligent monitoring system for systemic sclerosis skin care and an application method thereof. The system comprises a hardware acquisition module, an edge computing module, and a cloud management platform. The hardware acquisition module collects skin-related data from patients in a non-invasive manner. The edge computing module processes the data, compares it with a systemic sclerosis skin lesion database, and outputs preliminary results. The cloud management platform enables data management and delivers personalized care plans. The application method forms a closed-loop management process through data collection, report generation and synchronization, care recommendation delivery, and effectiveness feedback. This solution enables precise monitoring, provides data support for medical staff, enhances the targeting and effectiveness of patient care, improves patient prognosis, and holds significant application value.

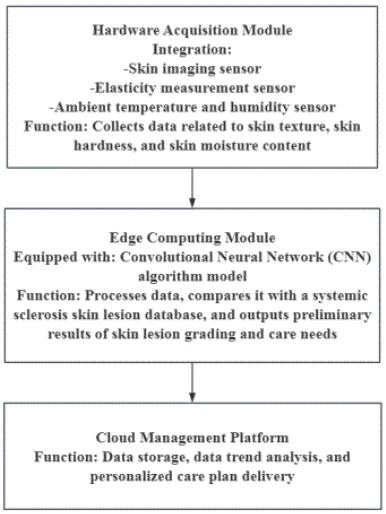

21: 2026/03089. 22: 2026/03/19. 43: 2026/10/26
51: A61F
71: Timebase Medical Science & Technology (Jiangsu) Co., Ltd.
72: Huaqing YANG, Bo XU, Limin LIU, Liang LIU, Hongxing SONG, Qiang LI, Wei CUI, Tao CHEN, Yi WANG, Ning XU
54: PREPARATION METHOD FOR STERILE SODIUM CARBOXYMETHYL CELLULOSE LIQUID DRESSING
00: -
The present invention relates to the technical field of medical dressings and discloses a preparation method for a sterile sodium carboxymethyl cellulose liquid dressing, comprising Step 1: Formulation design, Step 2: Raw material pretreatment and sterile preparation, Step 3: Preparation system sterilization, Step 4: Colloidal solution preparation, Step 5: Sterile fine filtration, Step 6: Sterile filling, Step 7: Terminal moist heat sterilization, and Step 8: Post-sterilization inspection and packaging. This method ensures sterility throughout the entire process, significantly reduces infection risk, and achieves comprehensive sterile control by "raw material pretreatment sterilization + in-place preparation system disinfection + two-stage sterile filtration + terminal moist heat sterilization," blocking microbial contamination pathways at the source. Raw material drying pretreatment achieves preliminary sterilization, 0.22micrometre fine filtration + terminal sterilization with F value [greater than or equal to] 12 ensures stable sterility of the product, effectively reduces the probability of wound contact infection, and improves clinical safety.

21: 2026/03090. 22: 2026/03/19. 43: 2026/10/26
51: A61K
71: HENAN UNIVERSITY OF URBAN CONSTRUCTION
72: WU Miao, WEI Pengfei, LIU Huiyuan, CHANG Huihui, ZHANG Ge, FANG Weixun, LI Guantao, XIE Zhaohui, YANG Shijie
54: EXTRACTION METHOD FOR IMPROVING TOTAL PHENOLIC YIELD OF FLOS SOPHORAE IMMATURUS
00: -
The present invention discloses an extraction method for improving total phenolic yield of Flos Sophorae Immaturus, belonging to the technical field of natural product extraction. The present invention, for the first time, elevates the physical state of the cell wall from a passively adapted variable to an actively controlled variable. By precisely regulating the swelling degree of the Flos Sophorae Immaturus cell wall, high selectivity and high-speed mass transfer of total phenolic compounds are achieved while maintaining cell wall skeleton integrity. Compared with traditional methods, the method of the present invention improves yield, enhances purity, and shortens extraction time. The process of the invention is simple, has extremely low energy consumption, good reproducibility, and possesses extremely high industrial application value.

21: 2026/03091. 22: 2026/03/19. 43: 2026/10/26
51: B65G
71: Shandong Xinhao Industrial and Mining Equipment Co., Ltd
72: Zaijun Yang, Chengyu Liu, Qiang Li, Chuanhai Zhou, Guochen Wang, Feng Ji, Lizhi Wang, Lingjian Bu, Haiyang Xu
54: AUTOMATIC BELT CENTERING DEVICE
00: -
An automatic belt centering device, belonging to the technical field of auxiliary equipment for conveyor belts. The device comprises a conveyor belt assembly, a centering mechanism, an actuator, a sensor, and a control module. The centering mechanism is arranged on the support frame at a side of the conveyor belt. The actuator drives the centering mechanism to act. The sensor detects the deviation position of the conveyor belt. The control

module receives the signal and controls the actuator to act, achieving automatic centering of belt deviation. The invention features a reasonable structure, precise monitoring, and adaptive adjustment. It can avoid rigid collision between the conveyor belt and the centering mechanism, protect the conveyor belt from damage, improve equipment operational stability, and reduce maintenance costs. It is suitable for various material conveying systems.

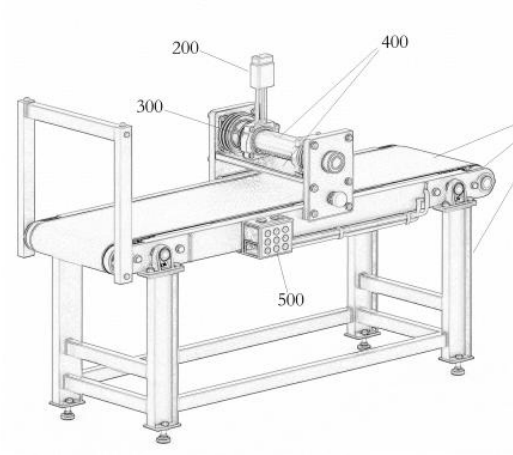

21: 2026/03092. 22: 2026/03/19. 43: 2026/10/26
51: A61K
71: The Second Affiliated Hospital of Fujian University of Traditional Chinese Medicine
72: Pengsheng Zhang, Yongzhi Li, Weinan Zheng, Fei Wu

54: NEPHRITIS PRURITUS DECOCTION AND PREPARATION METHOD AND USE THEREOF

00: -

A Nephritis Pruritus Decoction and a preparation method and use thereof. In the invention, Angelicae Sinensis Radix is used to tonify blood and activate blood circulation, Chuanxiong Rhizoma to move qi and activate blood, Paeoniae Radix Rubra to clear heat, dissipate stasis, and cool blood; Rehmanniae Radix to clear heat, nourish yin, and cool blood, these are combined with Persicae Semen and Carthami Flos to enhance blood activation and stasis transformation, supplemented by Eupolyphaga Steleophaga, Cicadae Periostracum, and Vaccariae Semen to resolve stasis and unblock collaterals, penetrating and moving to strengthen the effect of unblocking collaterals; Scutellariae Radix, Lonicerae Japonicae Flos, Rhapontici Radix, and Moutan Cortex clear heat and resolve toxin; Schizonepetae Herba and Saposhnikoviae Radix, combined with Dictamni Cortex, enhance the effect of dispelling wind and relieving itching; Trichosanthis Radix, Mori Folium, Ligustri Lucidi Fructus, and Ecliptae Herba dispel wind, clear heat, nourish yin, and moisten dryness; Poria, Atractylodis Macrocephalae Rhizoma, Arecae Pericarpium, and Galli Gigerii Endothelium Corneum strengthen the spleen and eliminate dampness, fortify the middle jiao, and emphasize protecting and supporting the spleen and stomach; Sennae Folium and Cannabis Fructus moisten the intestines and unblock the bowels, providing an outlet for pathogenic factors, the combined use of all the medicinals achieves the effects of tonifying blood, dispelling wind, moistening dryness, and unblocking collaterals, thereby effectively treating chronic kidney disease-associated pruritus of the blood deficiency with wind dryness complicated by blood stasis syndrome.

21: 2026/03094. 22: 2026/03/19. 43: 2026/10/26
51: H01M
71: China Silicon Corporation Ltd.
72: WAN, Ye, LIU, Jianhua, LI, Xuerong, CAO, Ke, ZHAO, Xizhe, YU, Shaofeng, XING, Xiaoyun
33: CN 31: 202511516112.7 32: 2025-10-23

54: LOW-COST SILICON-CARBON ANODE MATERIAL AND MANUFACTURING METHOD THEREFOR

00: -

The present application provides a low-cost silicon-carbon anode material and a manufacturing method therefor, which belong to the field of anode materials for lithium-ion batteries. The manufacturing method for a low-cost silicon-carbon anode material provided by the present application includes the following steps: introducing a gaseous silicon source and a first protective gas into a reactor, and performing silicon deposition on a pore wall surface of porous carbon to obtain a silicon-carbon composite material; and introducing a gaseous organic carbon source and a second protective gas into the reactor for carbon deposition to obtain the low-cost silicon-carbon anode material, where residence time of the gaseous organic carbon source in the reactor is 20-95 s. In the present application, the gaseous silicon source and the first protective gas are introduced into the reactor, and silicon deposition is performed on the surface of the porous carbon to obtain the silicon-modified porous

carbon. By controlling the residence time of the organic carbon source in the reactor, the present application effectively increases the deposition rate of the organic carbon source, and solves the problems of a low carbon deposition rate, a poor coating effect and a high production cost in a manufacturing process of a low-cost silicon-carbon anode material by a vapor deposition method.

21: 2026/03103. 22: 2026/03/19. 43: 2026/10/26
51: B66F
71: HANGZHOU FORKLIFT MAST CO., LTD.
72: DUAN,Quanjun, DING, Liang, ZHANG, Jie, CHEN, Yuandong
33: CN 31: 202522467100.1 32: 2025-11-20

54: OIL CYLINDER STRUCTURE CONVENIENT FOR ADJUSTMENT

00: -

The present application relates to an oil cylinder structure convenient for adjustment and belongs to the technical field of hydraulic transmission, which includes a gantry, a support base and an oil cylinder. The oil cylinder structure further includes a buffer mechanism on a top of the support base and a lubrication mechanism connected between the oil cylinder and the support base. The buffer mechanism includes a slider on a movement path of the gantry, and the slider is connected with connecting rod assemblies. Springs are provided inside the buffer mechanism. When the slider is impacted, the connecting rod assemblies drive the springs to compress to achieve buffering. The lubrication mechanism includes an adjusting bolt, and rotation of the adjusting bolt adjusts a relative position between the oil cylinder and the support base. By providing the buffer mechanism, the present application effectively absorbs an impact force when the gantry moves to a top end, protecting the oil cylinder and the gantry structure. Meanwhile, integrating the lubrication mechanism on the adjusting bolt achieves synchronization of adjustment and lubrication, reduces adjustment difficulty, prevents component wear, and features a compact structure, facilitating maintenance.

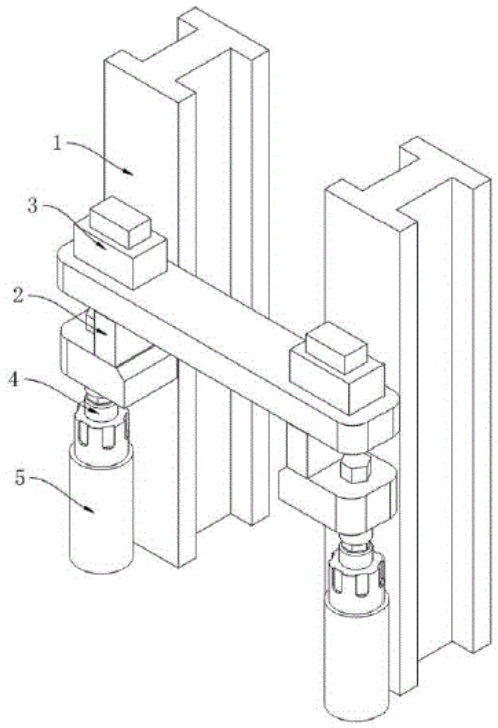

21: 2026/03128. 22: 2026/03/20. 43: 2026/10/27
51: E04B
71: Henan University of Urban Construction
72: Yanwei CUI, Yuan MAN, Weiwei GUO, Luke SHI, Xiaojing YIN, Jiangle LI

54: STEEL STRUCTURE PREFABRICATED BUILDING WITH DAMPING FUNCTION

00: -

The present invention provides a steel structure prefabricated building with damping function, relating to the technical field of steel structure buildings. The prefabricated steel structure building with shock absorption function comprises a plurality of steel structure main bodies, the plurality of steel structure main bodies are arranged laterally, first connectors are provided at the front and rear ends of each of the plurality of steel structure main bodies, a second connector is provided at the upper position inside each of the plurality of steel structure main bodies, bases are fixedly connected at the front and rear ends of the lower end surface of each of the plurality of steel structure main bodies, a crossbar structure is provided at the upper position inside each of the plurality of steel structure main bodies, taking one of the plurality of steel structure main bodies as an example, the steel structure main body comprises a steel structure support, and a triangular roof truss is

provided at the upper end surface of the steel structure support. Through the shear thickening effect of the non-Newtonian fluid, it remains in a liquid state at low speed and instantly hardens under high-speed impact, absorbing impact energy, dispersing concentrated stress to the tube wall, reducing the peak stress at the node, and decreasing stress damage at the node.

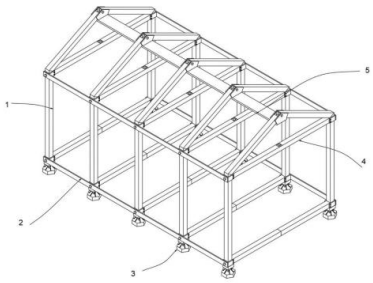

21: 2026/03129. 22: 2026/03/20. 43: 2026/10/27
51: A61K; A61P
71: Crop Research Institute, Shandong Academy of Agricultural Sciences
72: LI, Jihu, LI, Genying, LI, Yulian, GAO, Jie, ZHANG, Rongzhi, ZHANG, Shujuan, SONG, Guoqi, LI, Wei

54: CODON-OPTIMIZED TREX2 GENE AND APPLICATION THEREOF IN IMPROVING EFFICIENCY OF MULTIPLEX GENOME EDITING IN TRITICUM AESTIVUM

00: -

The present invention relates to a codon-optimized Trex2 gene and application thereof in improving an efficiency of multiplex genome editing in wheat (Triticum aestivum L.). The present invention performs codon optimization on a nucleic acid exonuclease Trex2-encoding gene, thereby obtaining an optimized Trex2 gene with a nucleotide sequence as set forth in SEQ ID NO: 1. Driving expressions of both the optimized Trex2 gene and a Cas9 protein-encoding gene in a Triticum aestivum strain may improve an efficiency of multiplex genome editing in Triticum aestivum. Example results show that driving the expression of the optimized Trex2 gene and the Cas9 protein-encoding gene in the Triticum aestivum genome is capable of significantly increasing a probability of simultaneous mutation of homologous genes on A, B, and D genomes of three target genes in a single Triticum aestivum line, thereby increasing a probability of obtaining a mutant phenotype in a T0 generation.

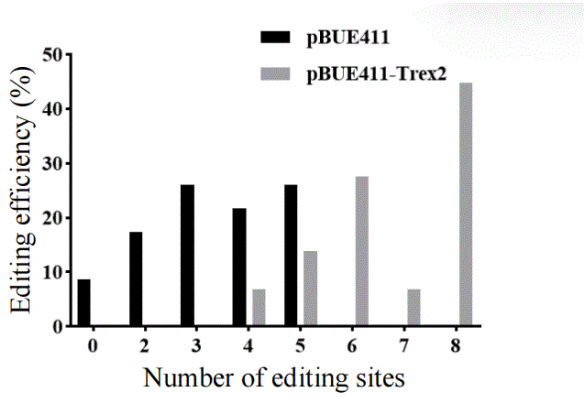

21: 2026/03130. 22: 2026/03/20. 43: 2026/10/27
51: B07B
71: Changjiang River Scientific Research Institute, Changjiang Water Resources Commission
72: PAN, Jiajun, ZHU, Yue, YI, Shun, GUO, Xiling, ZHOU, Yuefeng, ZUO, Yongzhen, WANG, Yanli, LU, Yiwei, LIU, Teng, WAN, Hang, HAN, Bing

54: A MULTI-MODE COUPLED VIBRATING SCREEN AND A METHOD FOR SCREENING NANO-SCALE FINE SOIL PARTICLES

00: -

This patent discloses a multi-mode coupled vibrating screen and a nanoscale fine soil particle screening method, pertaining to particle analysis. The system comprises: a multi-stage filter cloth switching unit installed at the screening position within the vibrating screen body;an ultrasonic vibration unit and a negative pressure auxiliary unit respectively positioned below the screen frame inside the vibrating screen body; a laser particle size monitoring module installed on the discharge flow path of the vibrating screen body.The multi-stage filter cloth switching unit, ultrasonic vibration unit, negative pressure auxiliary unit, and laser particle size monitoring module are all connected to the control unit within the vibrating screen body. The multi-stage filter cloth switching unit automatically switches between filter cloths with different nanometer pore sizes during fine soil particle screening. The ultrasonic vibration unit disrupts agglomeration of the screening sample through high-frequency micro-vibrations. This invention achieves nanoscale efficient screening of fine soil particles

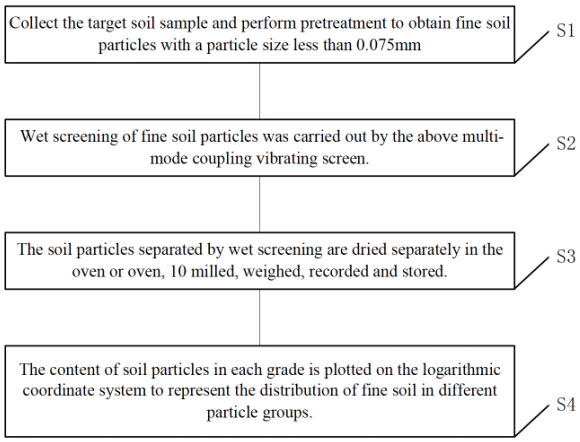

21: 2026/03131. 22: 2026/03/20. 43: 2026/10/27
51: E21F
71: China Railway 17th Bureau Group Electrification Engineering Co., Ltd.
72: Wei, Le, Ding, Xiaoqiang, He, Leigang, Chen, Wanqin, Li, Yang, Gao, Jin, Chen, Yan
33: CN 31: 2025205297291 32: 2025-03-25
54: INTERLOCKING CONTROL SYSTEM FOR ROLLING SHUTTER DOORS AND LIGHTING IN VEHICLE CROSS-PASSAGES OF EXPRESSWAY TUNNELS
00: -
The present invention relates to the technical field of roller shutter door control, and particularly to an interlocking control system for roller shutter doors and lighting in vehicle cross-passages of expressway tunnels, including a control cabinet, button boxes and a circuit structure. The circuit structure includes a main circuit, a control circuit and a status indication and lighting interlocking circuit of a roller shutter door control cabinet. A panel of the control cabinet is arranged with an uplink stop button, an uplink lift button, an uplink lower button, a downlink stop button, a downlink lift button and a downlink lower button. The button boxes are arranged with stop buttons, lift buttons and lower buttons. The control cabinet is mounted inside a vehicle cross-passage, an uplink button box is mounted at an uplink roller shutter door outside the vehicle cross-passage, and a downlink button box is mounted at a downlink roller shutter door outside the vehicle cross-passage. The present invention can control two sets of uplink and downlink roller shutter doors simultaneously and interlock lighting fixtures at a top of the vehicle cross-passage, which is mainly applied to the interlocking control of roller shutter doors and lighting in vehicle cross-passages in tunnel electromechanical engineering, and has strong popularization value.

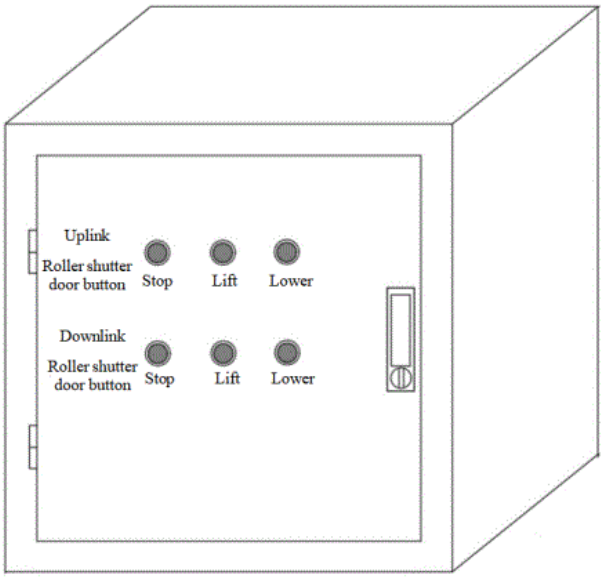

21: 2026/03136. 22: 2026/03/20. 43: 2026/10/27
51: B23K
71: Jiangsu Wetown New Material Technology Co., Ltd.
72: Kai YAO, Panpan ZHU, Jun REN
33: CN 31: 2025104312852 32: 2025-04-08
54: COPPER WIRE LOADING RACK FOR WELDING STRIP PROCESSING
00: -
A copper wire loading rack for welding strip processing is provided, belonging to the technical field of welding strip processing equipment. The copper wire loading rack includes a peripheral frame. An inner winding frame is arranged inside the peripheral frame, the peripheral frame and a lower end of the inner winding frame are fixedly connected to a bottom plate, and a space for winding the copper wire is reserved between the peripheral frame and the inner winding frame. The present disclosure solves the problem that in the existing welding strip processing, the copper wire is mostly paid off and loaded by a wire coil wound with the copper wire, although the wire coil can perform a certain amount of loading, the quantity of the copper wire wound on the wire coil is less, and thus the wire coil needs to be replaced frequently to meet continuous production, leading to a great labor intensity; and in addition, a shutdown operation is

also required when replacing the wire coil, which also reduces the welding strip processing efficiency.

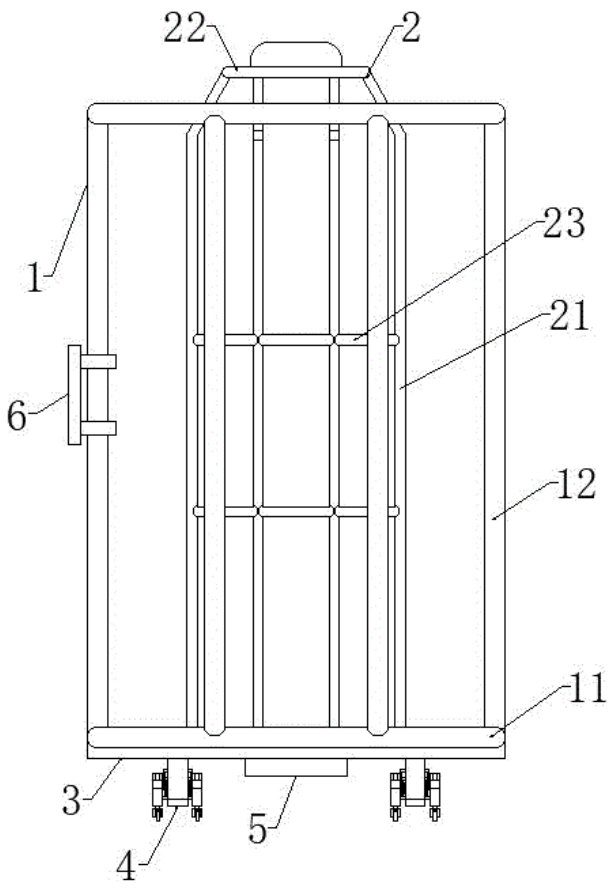

21: 2026/03137. 22: 2026/03/20. 43: 2026/10/29
51: B05B; E21D; G05D
71: JOY GLOBAL UNDERGROUND MINING LLC
72: TYLER, Callum K., PATEL, Zubin N., AHMED, Mohammed K., RIZVI, Syed Raazi Ur-Rehman, HELM, Dustin M., KOEKEMOER, Renier
33: US 31: 63/578,352 32: 2023-08-23
54: BULK RESIN INJECTION SYSTEM
00: -
The present disclosure is directed to a resin injection system for a mining operation that includes a first tank configured to hold a first viscous fluid, a second tank configured to hold a second viscous fluid, a wand in communication with the first tank and the second tank, a first pump configured to drive the first viscous fluid from the first tank to the wand, and a second pump configured to drive the second viscous fluid from the second tank to the wand. The wand is configured to extend or retract from an initial position and to inject the first viscous fluid and the second viscous fluid into a hole. The first pump and the second pump are configured to operate independently.

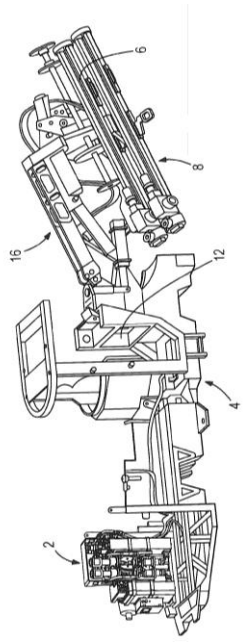

21: 2026/03196. 22: 2026/03/23. 43: 2026/10/27
51: C22B
71: Kunming University of Science and Technology, Yunnan Chihong Zinc & Germanium Co., Ltd.
72: ZHANG Chaobo, DENG Zhigan, WEI Chang, LU Zhanqing, WANG Weicheng, DAI Xingzheng, LI Xingbin, FU Guang, LI Minting, ZHANG Te, CHEN Xianyou, LUO Xingguo, GAO Wei, BAI Jinlong, XIONG Fengyu, YU Jie
33: CN 31: 202510343706.6 32: 2025-03-22
54: A METHOD FOR EXTRACTING GERMANIUM FROM COAL ASH CONTAINING GERMANIUM
00: -
This invention discloses a germanium leaching method using germanium-containing coal ash, belonging to the field of germanium extraction technology. The method comprises the following steps: (1) Mixing germanium-containing coal ash with alkaline solution in a primary reactor for stirring reaction to obtain alkaline leaching pulp; (2) Adding mixed acid to the alkaline leaching pulp and stirring it in a secondary reactor for mixed acid leaching to produce acid leaching pulp; (3) Performing liquid-solid separation on the acid leaching pulp to obtain slag primarily composed of silica and germanium-rich leaching solution. By replacing alkaline melting with high-temperature alkaline leaching and directly applying mixed acid leaching to the alkaline leaching

pulp, the method converts insoluble silicates and silica into soluble silicates in mixed acid, effectively addressing technical challenges in efficient germanium extraction. The method demonstrates high germanium leaching efficiency, simplified process flow, and effective control of silicon content in the leaching solution, facilitating comprehensive resource recovery and utilization.

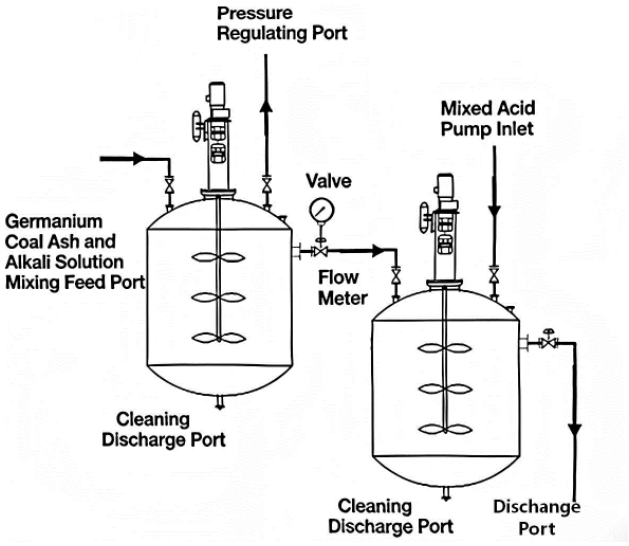

21: 2026/03197. 22: 2026/03/23. 43: 2026/10/27
51: A61K
71: Shanxi Zhendong Health Care Technology Co., Ltd.
72: LU Zirui, ZHANG Hongqiang, YANG Tao, CAO Fumin, WANG Xiaolu, LI Xiaohong, ZHANG Jiamei, WANG Jiahui
33: CN 31: 202610147293.9 32: 2026-02-02

54: COMPOUND RADIX SOPHORAE FLAVESCENTIS CREAM FOR TREATING ECZEMA AND PREPARATION METHOD THEREFOR

00: -

A compound Radix Sophorae Flavescentis cream for treating eczema and a preparation method therefor fall within the technical field of medicine, and the cream includes the following components in percentage by mass: glycerol monostearate 3.0-6.0%, cetostearyl alcohol 2.0-6.0%, sodium lauryl sulfate 1.0-2.0%, light liquid paraffin 1.0-6.0%, dimethicone 750 0.5-2.0%, glycerol 15.0-20.0%, propylene glycol 3.0-5.0%, Radix Sophorae Flavescentis extract 0.1-0.3%, Herba Centellae extract 0.2-0.4%, and the balance of purified water. The present invention provides a safe and mild topical cream for childhood eczema with anti-inflammatory and antipruritic effects, skin barrier repair, long-term moisturization and synergistic effect of microecological regulation, and at the same time provides a preparation method which is simple in operation, controllable in parameters and suitable for industrial production, achieves the therapeutic goal of child eczema "rapidly relieving symptoms, repairing the barrier at the root causes and reducing the recurrence rate", and fills the technical blank of existing preparations for child eczema.

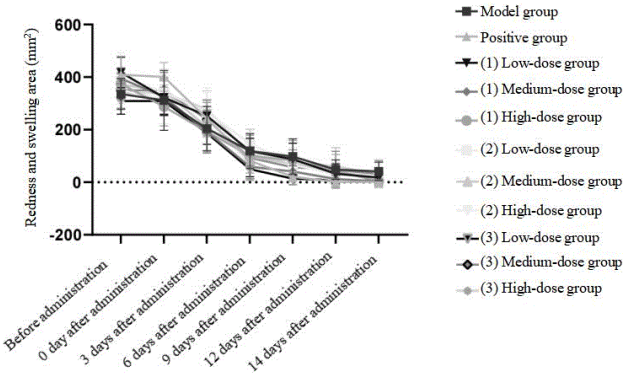

21: 2026/03198. 22: 2026/03/23. 43: 2026/10/27
51: E04H
71: Dr Amanjeet Kaur
72: Dr Amanjeet Kaur

54: METHOD FOR PREDICTING TRANSFORMATIONS IN TRADITIONAL HOUSE FORMS BASED ON SOCIO-CULTURAL FACTORS IN RURAL HILL REGIONS

00: -

The present invention relates to a method for predicting transformations in traditional house forms based on socio-cultural factors in rural hill regions. The invention assesses qualitative research tools in architecture for Kangra houses using a mixed method approach: focus group interviews, morphological studies, and photographic surveys documenting facades, roofs, materials, and interiors. Data is sorted, inductively coded into themes like migration and joint families, graphically analyzed into five transformation phases, and triangulated for reliability. This reveals socio-cultural drivers of house form evolution, enabling prediction of built form changes and protection of local identity.

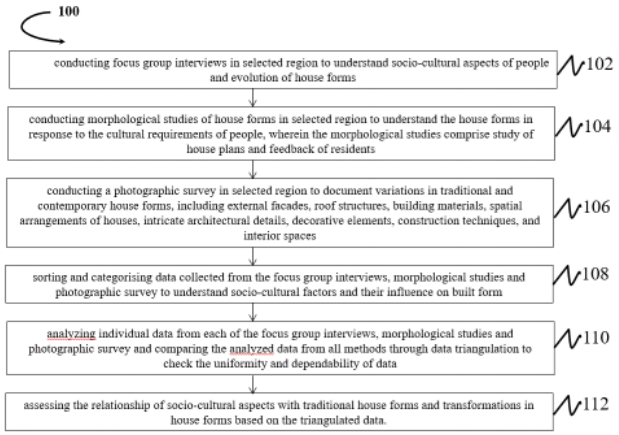

21: 2026/03199. 22: 2026/03/23. 43: 2026/10/27
51: G06F
71: Prof. Dr Bimal Kumar Mishra, Prafful Mishra
72: Prof. Dr Bimal Kumar Mishra, Prafful Mishra

54: A SYSTEM AND METHOD FOR PREVENTING CYBER-ATTACKS IN AN ELECTRONIC COMMERCE PLATFORM

00: -

The present invention relates to a system and method for preventing cyber-attack in an electronic commerce platform. The system integrates artificial intelligence based relational modeling, privacy-preserving cryptographic computation, blockchain-anchored trust ledgers, and supply-chain validation. The system constructs dynamic interaction networks among users, sellers, devices, payment instruments, products, and logistics entities to identify coordinated cyber-attacks as propagating processes. Privacy-preserving modules evaluate risk within secure execution environments using cryptographic proofs without exposing sensitive data. A distributed ledger maintains behavioral trust indicators and signed supply-chain provenance records. An autonomous response controller applies preventive measures including delayed settlement, escrow enforcement, verification requirements, shipment suspension, or entity isolation prior to transaction completion, thereby preventing cybercrime while minimizing legitimate commerce disruption.

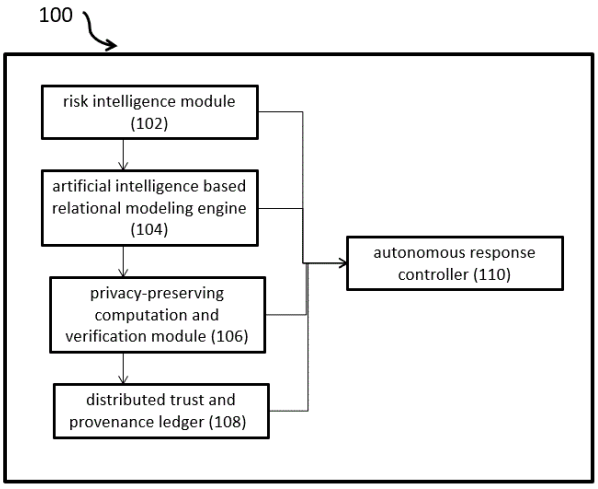

21: 2026/03201. 22: 2026/03/23. 43: 2026/10/27
51: A61K
71: MANGALAYATAN UNIVERSITY, ALIGARH, Ram Gopal Singh, Sunil Gupta, Bhawna Chaudhary
72: Ram Gopal Singh, Sunil Gupta, Bhawna Chaudhary

54: SUBLINGUAL MULTIPARTICULATE COMPOSITION AND METHOD FOR PROVIDING RAPID MIGRAINE RELIEF USING TRIPTANS

00: -

The present invention relates to a pharmaceutical multiparticulate composition for sublingual administration of a triptan for rapid migraine relief. The composition comprises a therapeutically effective amount of a triptan active pharmaceutical ingredient, mannitol as a water-soluble diluent, a super-disintegrant, and one or more pharmaceutically acceptable excipients selected from binders, taste-masking agents, saliva-wetting agents, glidants, and lubricants. The composition is provided in the form of discrete granules configured to disintegrate under the tongue within 30 seconds and release at least 90% of the triptan within 10 minutes in simulated saliva. The granules may possess controlled particle-size distribution, improved flowability, low friability, acceptable residual moisture, and storage stability. The invention further relates to a process for preparing the multiparticulate composition by granulation, drying, sizing, blending, and packaging into single-dose sachets or stick-packs, and to a pharmaceutical kit for administration without water.

21: 2026/03202. 22: 2026/03/23. 43: 2026/10/27

51: A61K
71: MANGALAYATAN UNIVERSITY, ALIGARH, Dr. Arbab Husain, Dr. Afreen Khanam
72: Dr. Arbab Husain, Dr. Afreen Khanam, Er. Ghayyum Husain, Dr. Ziaul Hasan, Dr. Hamda Khan, Prof. Alvina Farooqui, Dr. Saheem Ahmad, Mr. Rizwan Ahmad, Dr. Sangram Singh
54: C-PHYCOCYANIN-BASED THERAPEUTIC COMPOSITION AND IN VITRO METHOD FOR MODULATING HYPERGLYCEMIA AND GLYCATION IN AN NRK-52E RENAL CELL MODEL
00: -
The present invention provides a therapeutic composition comprising C-Phycocyanin (C-PC) and an in-vitro method for modulating hyperglycemia and glycation in NRK-52E renal epithelial cells under hyperglycemic conditions. The invention uniquely integrates a multi-parametric fluorescence-based protocol including glucose uptake assay, mitochondrial membrane potential measurement, ROS detection, and apoptosis profiling to validate the therapeutic efficacy of C-PC. The invention represents the first systematic demonstration of C-PC as an anti-hyperglycemic, anti-glycation, antioxidant, and cytoprotective agent in renal cell models, thereby offering a natural, non-toxic alternative to conventional hypoglycemic therapies with potential nutraceutical and therapeutic applications.

21: 2026/03208. 22: 2026/03/23. 43: 2026/10/27
51: H04W
71: XIAMEN DYNACAST INTELLIGENT TECHNOLOGY CO., LTD.
72: Chongchao, GONG
33: CN 31: 202411587511.8 32: 2024-11-08
54: METHOD FOR OPTIMIZING COMMUNICATION QUALITY AND COST OF INTERCOM DEVICES
00: -
The present invention discloses a method for optimizing communication quality and cost of intercom devices, which comprises the following steps: S1: Divide the video bitrate to be configured into three levels: high, medium, and low, and set an appropriate video bitrate according to the requirements of actual communication scenarios; initiate a call to the peer device to establish a call: the intercom device sends a call request to the peer device(s) via the SIP protocol, where one or more peer devices may be involved, and in a one-to-many scenario, multiple peer devices are called simultaneously. The present invention, by dividing the video bitrate into three levels (high, medium, and low) and dynamically adjusting the bitrate according to application scenarios, enables flexible dynamic adjustment of the video bitrate based on specific requirements. Compared with general bitrate adjustment methods, it offers greater flexibility: on the one hand, it provides better picture quality for intranet devices; on the other hand, it improves video smoothness for public network applications while reducing data communication costs, thereby achieving a balance between picture quality and communication costs.

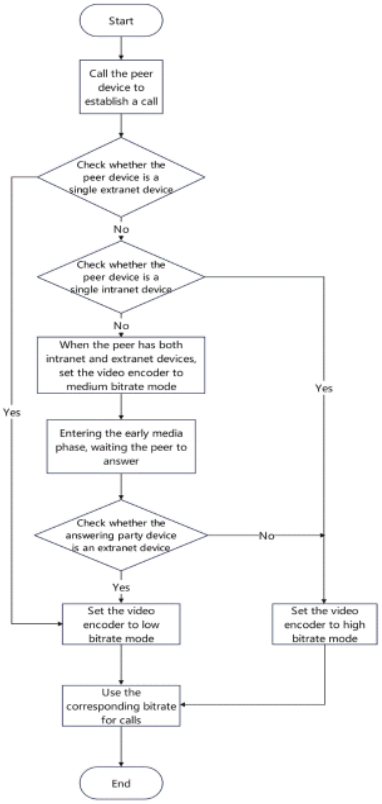

21: 2026/03239. 22: 2026/03/24. 43: 2026/10/27
51: C07C
71: MAO, Jianming
72: MAO, Jianming
33: CN 31: 202610148972.8 32: 2026-02-02
54: PREPARATION METHOD FOR (2S,4R,7R,8R)-3,3,7,11-TETRAMETHYLTRICYCLO[6.3.0.02.4]UNDEC-1(11)-ENE
00: -

The present invention provides a preparation method for (2S,4R,7R,8R)-3,3,7,11-tetramethyltricyclo[6.3.0.02.4]undec-1(11)-ene, which belongs to the technical field of organic synthesis. In the present invention, (1R,2S,8R,11R)-7-methylene-3,3,11-trimethyltricyclo[6.3.0.02.4]undecane is mixed with a catalyst, and an isomerization reaction is performed under hydrogen and pressurized conditions to obtain the (2S,4R,7R,8R)-3,3,7,11-tetramethyltricyclo[6.3.0.02.4]undec-1(11)-ene. In the present invention, preparation is conducted by a chemical synthesis method, which solves the problem that a target product can only be extracted from natural plants. The preparation method is environment-friendly and efficient, and has no generation of three industrial wastes.

21: 2026/03240. 22: 2026/03/24. 43: 2026/10/27
51: B62M
71: ZHEJIANG XIN PRECISION MACHINERY CO., LTD.
72: JIN Jianhua, YU Wenyong, MA Qiang
33: CN 31: 2025208401206 32: 2025-04-28
54: INDEPENDENT DRIVING STRUCTURE FOR LEFT AND RIGHT WHEEL-SIDE MOTORS OF PURE ELECTRIC TRICYCLE
00: -
An independent driving structure for left and right wheel-side motors of a pure electric tricycle is disclosed, including a rear axle support. Both ends of the rear axle support are provided with a driving motor, and the driving motor is connected to a wheel hub. The driving motor includes a motor housing and a reducer housing. A stator assembly and a rotor assembly are arranged in the motor housing. A main shaft is connected to the rotor assembly. A fixed gear ring, a planetary gear carrier, a sun gear, and planetary gears rotatably connected to the planetary gear carrier are arranged in the reducer housing. The sun gear is connected to the main shaft. An output shaft is arranged on the planetary gear carrier, and the output shaft is connected to the wheel hub.

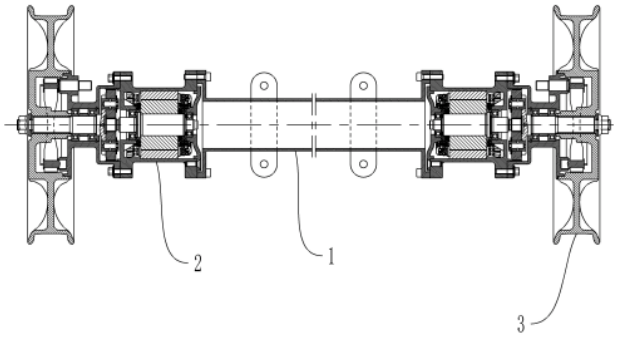

21: 2026/03241. 22: 2026/03/24. 43: 2026/11/16
51: C04B
71: Shandong jiaogong Construction Group Co.,Ltd., Shandong Transportation Research Institute
72: Liu Zhuoyu, An Ping, Liu Jiachao, Dong Zhao, Liu Yang, Sun Binghui, Qin Silong, Xu Shudong, Liu Jiuwei, Zuo Xiwen, Wu Ruifang, Wang Bin, Zhang Xiaolong
33: CN 31: 202510744636.5 32: 2025-06-05
54: PROCESS FOR PREPARING HIGH-ABRASION-RESISTANT PAVEMENT MATERIALS UTILIZING STEEL SLAG AND RECLAIMED ASPHALT PAVEMENT (RAP) MATERIALS
00: -
The present invention discloses a process for preparing high-abrasion-resistant pavement materials using steel slag and waste asphalt pavement materials, comprising the steps of: S1, dissolving a silane coupling agent in ethanol to form a modification solution, adding waste rubber powder to the modification solution, stirring evenly, and then allowing to stand; after completion, separating the waste rubber powder and drying, then adding to saturated lime water and heating for thermal insulation; after completion, separating the solid matter and drying to obtain modified rubber powder. S2, crushing the waste asphalt pavement materials and heating to melt the asphalt component therein, then adding steel slag coarse aggregate, sand and stone fine aggregate, and mineral powder, stirring evenly, then adding road asphalt, modified fiber, and modified rubber powder, continuing heating to melt the asphalt, and mixing evenly to obtain the pavement material, which is then paved on the roadbed to form a high-abrasion-resistant asphalt pavement. The present invention not only solves the resource utilization problems of steel slag and waste asphalt pavement materials, but also improves the

wear resistance of the prepared pavement materials and increases the service life.



21: 2026/03242. 22: 2026/03/24. 43: 2026/10/27
51: E04B
71: Henan University of Urban Construction
72: GUO, Weiwei, YIN, Xiaojing, GE, Hua, LOU, Yafei, CHEN, Hua

54: MULTIFUNCTIONAL PREFABRICATED PIPELINE-INTEGRATED PARTITION WALL STRUCTURE

00: -

Disclosed in the present invention is a multifunctional prefabricated pipeline-integrated partition wall structure, which relates to the technical field of prefabricated partition walls. The partition wall structure includes at least one partition wall unit, at least one wire conduit is mounted inside the partition wall unit, each wire conduit is used for allowing wires to pass therethrough, and a wire inlet and a wire outlet of the wire conduit are located on a surface of the partition wall unit. When two or more partition wall units are arranged, two adjacent partition wall units can be detachably connected. The present invention has a flat surface, an attractive appearance, and convenience for fixed connection to other components.

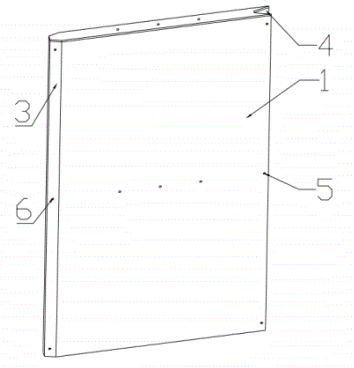

21: 2026/03243. 22: 2026/03/24. 43: 2026/10/27
51: E04B
71: Henan University of Urban Construction
72: YIN, Xiaojing, GUO, Weiwei, GE, Hua, LOU, Yafei, REN, Yage

54: DUST-PROOF PREFABRICATED PARTITION WALL STRUCTURE

00: -

Disclosed is a dust-proof prefabricated partition wall structure. The dust-proof prefabricated partition wall structure includes wallboard main bodies, where a galvanized steel wire mesh reinforced skeleton is embedded inside each wallboard main body, and two sides of each wallboard main body are provided with a convex tenon and a concave groove respectively. Splicing and sealing mechanisms are correspondingly arranged at joints between the convex tenons and the concave grooves of the adjacent wallboard main bodies, and each include an elastic sealing gasket and a sealant layer. Anti-slip lines are arranged on surfaces, attached to the convex tenons, of the elastic sealing gaskets, and the sealant layers are made of polysulfide sealant and fill gaps between the convex tenons and the elastic sealing gaskets. Pipeline sealing assemblies are mounted at the pipeline channels of the wallboard main bodies, and surface dust-proof layers cover outer surfaces of the wallboard main bodies.

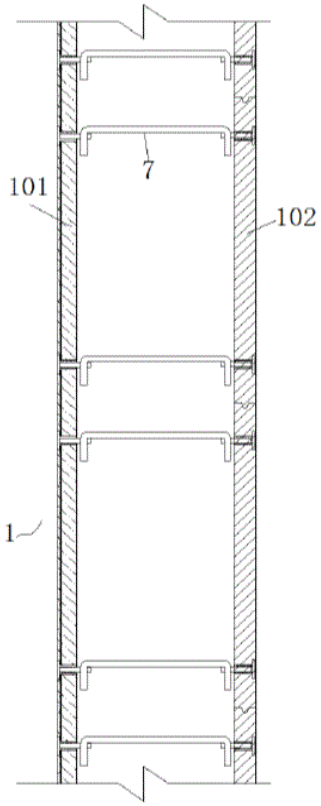

21: 2026/03247. 22: 2026/03/24. 43: 2026/10/27
51: E21B
71: Dr. Joyshree Barman, Dr. Prasenjit Talukdar, Dr. Bhaskar Jyoti Saikia, Dr. Mousmi Saikia, Dr. Ranjan Phukan, Dr. Rahul Saha, Dr. Parikshit Gogoi, Dr. Bhargabjyoti Saikia
72: Dr. Joyshree Barman, Dr. Prasenjit Talukdar, Dr. Bhaskar Jyoti Saikia, Dr. Mousmi Saikia, Dr. Ranjan Phukan, Dr. Rahul Saha, Dr. Parikshit Gogoi, Dr. Bhargabjyoti Saikia

54: METHOD FOR EVALUATING PERFORMANCE OF ZINC OXIDE NANOPARTICLES COMBINED WITH ANIONIC SURFACTANTS FOR ENHANCED OIL RECOVERY

00: -

The present invention relates to a method for enhanced oil recovery incorporates Zinc Oxide nanoparticles with anionic surfactants Sodium Dodecyl Sulfate and Alpha Olefin Sulfonates. The method involves preparing sand grain adsorbents, conducting Scanning Electron Microscopy and X-ray Diffraction analysis, measuring interfacial tension, preparing core discs, evaluating wettability through contact angle measurements, analyzing zeta potential and particle size, performing core flooding experiments, and conducting adsorption studies using UV-Vis spectroscopy. The hybrid slugs demonstrate oil recovery factors of 35.67 percent for Sodium Dodecyl Sulfate with Zinc Oxide nanoparticles and 33.11 percent for Alpha Olefin Sulfonates with Zinc Oxide nanoparticles. Langmuir-type monolayer adsorption confirms synergistic nanoparticle effects in mitigating surfactant adsorption and enhancing displacement efficiency in quartz-rich reservoir formations.

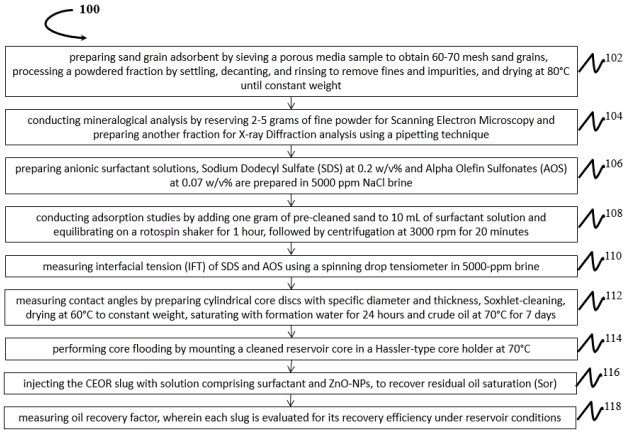

21: 2026/03248. 22: 2026/03/24. 43: 2026/10/27
51: G06Q
71: MANGALAYATAN UNIVERSITY, ALIGARH, Prof. Ashok Kumar Upadhyay, Prof. Rajesh Kumar Upadhyay
72: Prof. Ashok Kumar Upadhyay, Prof. Rajesh Kumar Upadhyay

54: SYSTEM AND METHOD FOR PRIVACY-PRESERVING AND SECURE LIBRARY OPERATIONS USING BLOCKCHAIN TECHNOLOGY

00: -

The present invention provides a system and method that secure and automate library operations by anchoring compact, cryptographically verifiable commitments to a blockchain ledger while preserving privacy and performance. Events from integrated library systems are normalized, signed, and recorded on an immutable, time-sequenced ledger for trustworthy audits and cross-institution reconciliation. Digital preservation uses Merkle-root commitments stored on chain with bulk content in a content-addressable repository, enabling later integrity verification without exposing files. Interlibrary-loan workflows are enforced via smart-contract state machines that manage deadlines, escrowed payments, penalties, and disputes. Patron and staff authorization employ decentralized

identifiers and verifiable credentials with selective-disclosure or zero-knowledge proofs. A batching layer and optional rollups reduce cost and latency, while a governance console offers role-based control, policy management, integrity audits, and observability.

21: 2026/03249. 22: 2026/03/24. 43: 2026/10/27
51: G06Q
71: MANGALAYATAN UNIVERSITY, ALIGARH, Prof. Ashok Kumar Upadhyay, Prof. Rajesh Kumar Upadhyay, Dr. Love Kumar
72: Prof. Ashok Kumar Upadhyay, Prof. Rajesh Kumar Upadhyay, Dr. Love Kumar
54: SMART LIBRARY RESOURCE MANAGEMENT SYSTEM USING EDGE ANALYTICS, SDN-BASED TRAFFIC CONTROL, AND PRIVACY-PRESERVING CIRCULATION INTELLIGENCE
00: -
A smart-library resource-management system (100) integrates RFID (1), edge analytics (2), SDN traffic control (3), and multi-mode connectivity (4) to provide real-time asset localization (5a), circulation automation (5b), environmental monitoring (5c), and augmented-reality navigation (5d). A zero-trust security layer (6) enforces continuous authentication and micro-segmentation; a privacy layer (7) applies privacy-preserving transformations to analytics; a messaging layer (8) decouples producers and consumers; an energy-optimization module (9) controls lighting/HVAC via building interfaces (9c); and an interoperability module (10) integrates with an ILS (10b). Edge nodes (2a) offload stream analytics from cloud layer (11), while SDN controller (3a) prioritizes latency-sensitive traffic to ensure responsive user experiences.

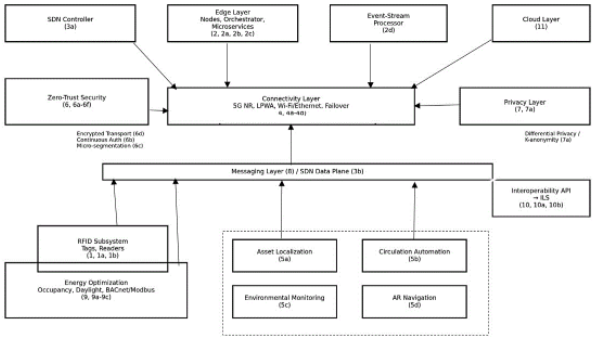

21: 2026/03250. 22: 2026/03/24. 43: 2026/10/27
51: A61K
71: MANGALAYATAN UNIVERSITY, ALIGARH, Syed Raashid Andrabi
72: Syed Raashid Andrabi, Dr. CH Nooka Raju, Dr. K.Vijaya Babu
54: INHALABLE BIODEGRADABLE NANOPARTICLE COMPOSITION FOR PULMONARY DETOXIFICATION
00: -
The present invention relates to a novel pulmonary detoxification system comprising inhalable, biodegradable nanoparticles designed to selectively capture and eliminate tar and hydrophobic toxic residues from lung tissue. The nanoparticles are functionalized with binding domains for polycyclic aromatic hydrocarbons, phenols, and nitrosamines, and are configured for deep lung deposition via inhalation. Once bound, the toxin-nanoparticle complexes are cleared through mucociliary transport and macrophage-mediated clearance. The invention further provides methods of pulmonary detoxification using the composition, offering a therapeutic approach for smokers, pollution-exposed individuals, and patients with chronic pulmonary disease.

21: 2026/03251. 22: 2026/03/24. 43: 2026/10/27
51: C12N
71: Manuranjan Konwar, Dr. Dhrubajyoti Neog, Prof. Diganta Bhuyan, Dr. Pranit Saikia, Manjusha Devi
72: Manuranjan Konwar, Dr. Dhrubajyoti Neog, Prof. Diganta Bhuyan, Dr. Pranit Saikia, Manjusha Devi
54: A METHOD FOR ISOLATING AND IDENTIFYING PLASTIC-DEGRADING BACTERIAL STRAINS FROM COAL ENVIRONMENTS
00: -
The present invention relates to a method for isolating plastic-degrading bacteria from Lesser Himalayan Gondwana coal environments involves collecting coal samples, enriching metabolically active microorganisms in minimal salt medium with glucose, screening for PEG-6000 utilization, and evaluating degradation of polypropylene and LDPE substrates. Bacterial identification is performed through 16S rRNA gene sequencing and phylogenetic analysis. Four bacterial species are identified: Micrococcus aloeverae, Acinetobacter vivianii, Kocuria oceani, and Bacillus haynesii. Acinetobacter vivianii demonstrates maximum plastic degradation potential while Bacillus haynesii shows superior polythene degradation. This invention on

Indian coal environments reveals species-specific enzymatic preferences and significant bioremediation potential for plastic pollution through coal-associated bacterial communities.

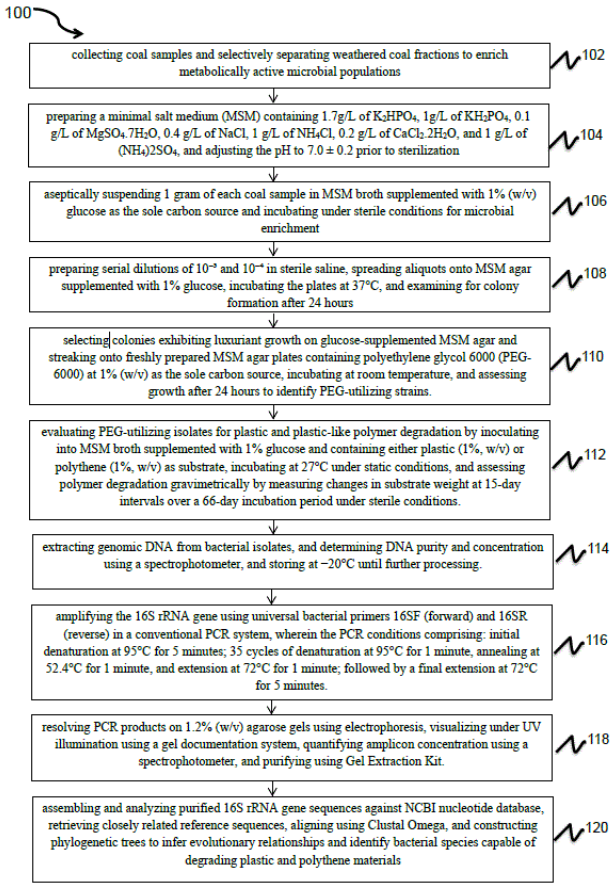

21: 2026/03252. 22: 2026/03/24. 43: 2026/10/27
51: E04B
71: CHINA RAILWAY THIRD DIVISION GROUP CO., LTD., CHINA RAILWAY THIRD DIVISION GROUP 6 TH ENGINEERING CO., LTD.
72: ZHANG, Jiaqing, ZHANG, Weiqi, BAI, Yuhe, JI, Peng, LIAN, Zixu
33: CN 31: 2026202499012 32: 2026-03-02
54: AUXILIARY DEVICE FOR ACCURATELY POSITIONING VERTICAL PRESTRESSED STEEL STRAND
00: -
The present invention discloses an auxiliary device for accurately positioning a vertical prestressed steel strand, and belongs to the technical field of continuous beam construction. The auxiliary device includes a fixing clamp; a plurality of supporting members are arranged at a lower end of the fixing clamp, an upper end of the supporting member is connected to the fixing clamp, and a lower end of the supporting member is welded and fixed to bottom-layer reinforcement of a bottom slab of a continuous beam; a plurality of mounting positioners are arranged at an upper end of the fixing clamp, each mounting positioner has a cylindrical hollow structure, an inner diameter of each mounting positioner is greater than an outer diameter of the vertical prestressed steel strand, and a lower end of each mounting positioner has a closed structure. The present invention can rapidly complete positioning of a lower end of a vertical prestressed steel strand. The auxiliary device has simple manufacture, convenient use, and simple operation, and can further prevent slow-bonding agent inside a slow-bonded steel strand from flowing out to contaminate concrete.

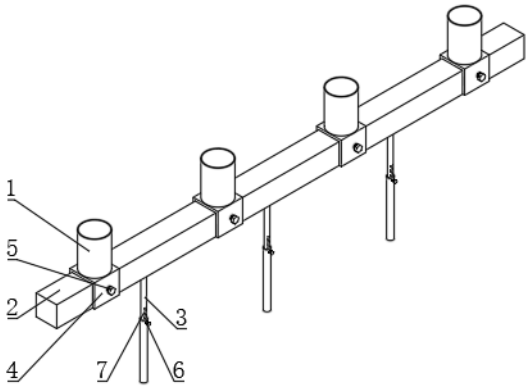

21: 2026/03253. 22: 2026/03/24. 43: 2026/10/27
51: A61B
71: CHINA RAILWAY THIRD DIVISION GROUP CO., LTD., CHINA RAILWAY THIRD DIVISION GROUP 6 TH ENGINEERING CO., LTD.
72: DENG, Shijia, LIU, Jian, WANG, Gang, ZHANG, Hengrui, QU, Pengfei
33: CN 31: 2026202494875 32: 2026-03-02
54: ANTI-SETTLEMENT DEVICE FOR ARCH FOOT OF TUNNEL STEEL ARCH FRAME
00: -
The present invention discloses an anti-settlement device for an arch foot of a tunnel steel arch frame, and belongs to the technical field of tunnel engineering. The anti-settlement device includes: a first supporting mechanism, where the first supporting mechanism is installed at an arch rib connection node of the steel arch frame; and a second supporting mechanism, where the second

supporting mechanism is installed at the arch foot of the steel arch frame. Through cooperative action of the double supporting mechanisms at the arch rib connection node and the arch foot, the present invention not only achieves close fitting with surrounding rock and stable supporting, but also enables flexible adjustment of a supporting height and buffering of impact force caused by deformation of surrounding rock, effectively solves settlement displacement of the arch foot of the steel arch frame, improves overall stability and adaptability of tunnel support, facilitates construction and material acquisition, ensures construction safety and engineering quality, and improves construction efficiency.

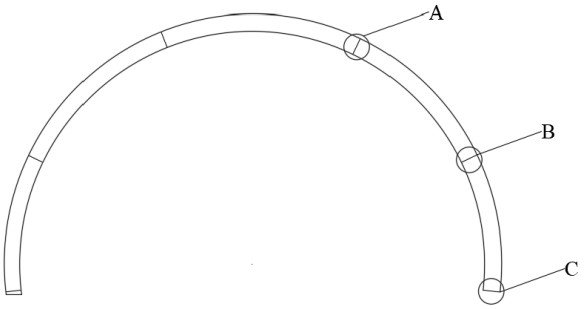

21: 2026/03254. 22: 2026/03/24. 43: 2026/10/27
51: G06Q
71: HEIFEI DESIGN AND RESEARCH INSTITUTE OF COAL INDUSTRY CO., LTD., CHINA COAL NO.3 CONSTRUCTION GROUP COMPANY LIMITED, CHINA COAL MINE CONSTRUCTION (ANHUI) TECHNOLOGY CO., LTD.
72: LI, weili, WANG, dayu, GAO, mingsong
54: AIR INLET RETAINING WALL STRUCTURE OF UNDERGROUND EXPLOSIVE MATERIAL DEPOT
00: -
Provided is an air inlet retaining wall structure of an underground explosive material depot, belonging to the technical field of mine construction. The structure includes a tooth-shaped space between an air inlet retaining wall and an air inlet retaining wall. The air inlet retaining wall is integrally embedded in a distribution chamber wall. The distribution chamber wall is poured in a rock stratum. A three-air inlet retaining wall structure is arranged at a position where a distribution chamber channel leads to an explosive storage room, respectively. A buffer room is formed in a space between the three air inlet retaining walls. The air inlet retaining wall structure is a structure integrally poured by high-strength concrete containing steel fibers. A shock wave can be effectively guided to transmit along a tooth-shaped spatial path through the three air inlet retaining walls arranged in a tooth shape, and the shock wave is blocked by the three air inlet retaining walls layer by layer in sequence in a transmission process, thereby effectively dissipating energy, avoiding casualties in accidents, and preventing occurrence of secondary accidents. The integrally poured structure of the high-strength concrete containing steel fibers overcomes the defect that conventional wave-blocking concrete material is low in strength and easily damaged, destroyed, and cracked under a reverse tension action of shock waves, and has a risk of people being injured by gravel, thereby being widely used underground.

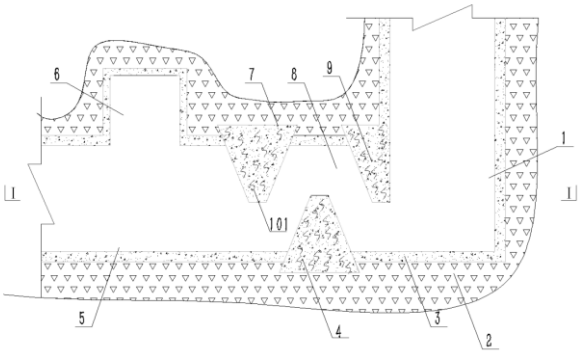

21: 2026/03255. 22: 2026/03/24. 43: 2026/10/29
51: E21D
71: ANHUI UNIVERSITY OF SCIENCE AND TECHNOLOGY, HEIFEI DESIGN AND RESEARCH INSTITUTE OF COAL INDUSTRY CO., LTD.
72: LI, Weili, WANG, Lei, CHEN, Lipeng
54: SUPPORT METHOD FOR CONTROLLING DEFORMATION OF DEEP HIGH-GROUND-PRESSURE PERMANENT LARGE-SECTION ROADWAY
00: -
Provide is a support method for controlling deformation of a deep high-ground-pressure permanent large-section roadway, belonging to the technical field of mine roadway support. The method is performed according to the following steps: first, excavating a large-section roadway, and reserving a deformation amount of about 200 mm in a transverse direction and a deformation amount of about 100 mm in a longitudinal direction; then

performing primary support, specifically including a bolt, a mesh, a cable, shotcrete, and grouting, that is, bolt support, cable support, initial mesh installation, bolt grouting, and shotcrete to seal a surrounding rock, during which yielding occurs in the roadway; and after the yielding deformation of the roadway is stable (the deformation amount is within 200 mm), performing secondary support, specifically including a bolt, grouting, a belt, and shotcrete, that is, bolt support, grouting cable support, a W4 steel belt, and shotcrete to seal the surrounding rock. This process is essentially a compression resistance process. The support method uses a graded support method of "yielding + compression resistance" to change three-dimensional mechanical characteristics and a mechanical environment of the surrounding rock of the roadway, thereby effectively controlling deformation of the deep high-ground-pressure permanent large-section roadway. The support method is simple in construction process, low in labor intensity of workers, good in control effect, high in practical value, and suitable for supporting the deep high-ground-pressure permanent large-section roadway below 1000 meters.

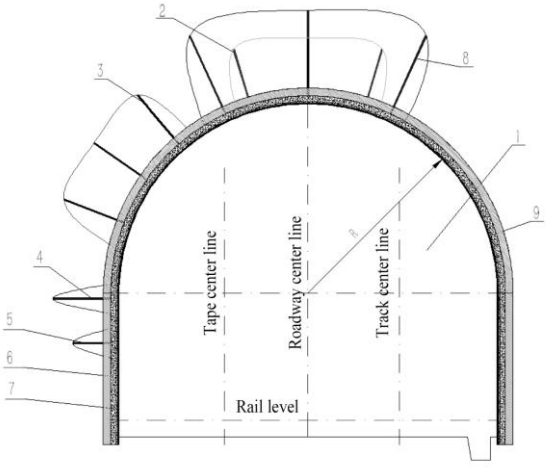

21: 2026/03273. 22: 2026/03/24. 43: 2026/10/30
51: A01B
71: Gansu Agricultural University
72: ZHANG Zhengzhong, ZHONG Peifang, SU Shiping, SHAN Lishan, SONG Lingling
33: CN 31: 202512029323.4 32: 2025-12-30
54: A DESERTIFIED GRASSLAND ECOLOGICAL RESTORATION DEVICE AND PRECISION SEEDING METHOD

00: -
The present application provides a desertified grassland ecological restoration device and a precision seeding method, relating to the technical field of ecological restoration, comprising a mounting plate and moving wheels symmetrically disposed on both sides of the bottom of the mounting plate, a driving shaft is arranged between the two opposite moving wheels, the seeding mechanism includes an adjusting component disposed at the bottom of the mounting plate, a drilling barrel arranged on the adjusting component, and a propelling component disposed on the mounting plate and connected to the drilling barrel, the drilling barrel consists of two structurally identical first half-barrels and second half-barrels, the adjusting component is capable of driving the first half-barrels and the second half-barrels to move horizontally relative to each other to realize the opening and closing of the drilling barrel, the feeding mechanism is disposed on the mounting plate for uniformly feeding grass seeds into the drilling barrel. The present application can uniformly plant the same amount of grass seeds inside the soil layer of the desert, preventing the grass seeds from being directly scattered on the ground surface and unable to adhere to the soil layer to take root and survive due to the influence of external factors such as wind and rain.

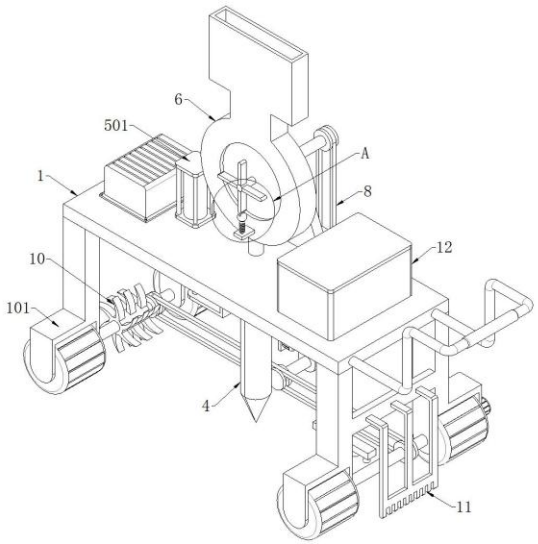

21: 2026/03313. 22: 2026/03/25. 43: 2026/10/29
51: G01N
71: Qinghai Geological Survey

72: ZHENG Zhenhua, MO Yanqiang, MA Guodong, ZHANG Junhai, ZHANG Yu, QI Yongjun, ZHAO Wei, WANG Fanggang, BAO Shanbin

54: CHROMITE EXPLORATION METHOD AND SYSTEM BASED ON MULTI-METHOD COMBINATION

00: -

The invention discloses a chromite exploration method and system based on multi-method combination, which includes the following steps: filling data blank areas through a spatial interpolation technology if the boundaries of fused anomaly features are unclear, so as to identify and divide subareas with clear boundaries; automatically grouping and merging the anomaly features in the subareas by adopting a clustering algorithm to obtain cluster areas with concentrated mineralization clues; arranging high-resolution and high-density local geophysical scanning for the cluster areas to acquire three-dimensional fine geophysical data containing anomaly intensity information, and determining the depth distribution and occurrence form of potential mineral deposits according to the data; ranking the cluster areas by priority by adopting an anomaly intensity ranking algorithm according to the depth distribution and anomaly intensity features, locking the positions of high-priority mineral deposits accordingly, and providing an accurate positioning basis for subsequent drilling verification.

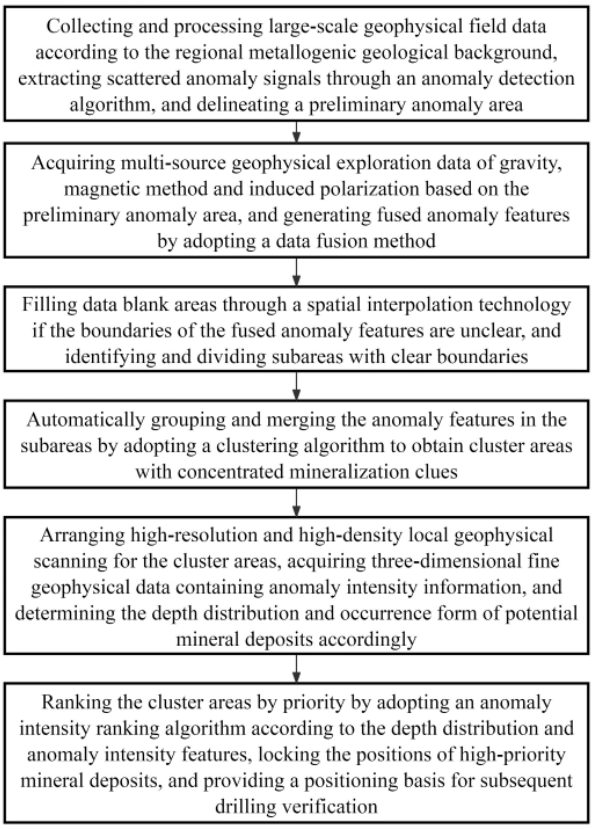

21: 2026/03314. 22: 2026/03/25. 43: 2026/10/29

51: F03D

71: China Railway 17th Bureau Group Electrification Engineering Co., Ltd.

72: Lu, Jinxin, Ding, Xiaoqiang, Chen, Yan, Ning, Xu, Sun, Kang, Li, Yulong, Zhao, Jinlong, Gao, Jin, Wang, Weihong

33: CN 31: 2025227548545 32: 2025-12-25

54: SAFETY PROTECTION AND FIXING DEVICE FOR WIND TURBINE GENERATOR FOUNDATION

00: -

The present invention provides a safety protection and fixing device for wind turbine generator foundation for solving technical problems related to suspension of five-point safety harness for operators and high hanging and low use of temporary power lines when there is no safety protection stress point above wind turbine foundation, and falling within the technical field of safety. The present invention includes a plurality of sleeves, a steel wire rope I and a steel wire rope II. The plurality of sleeves are uniformly fixed around an outer side of a steel formwork of a wind turbine foundation column, a vertical reinforcement bar is arranged inside each sleeve, and an upper iron ring and a lower iron ring

are fixed on a portion of each vertical reinforcement bar exposed upwardly out of the sleeve; the steel wire rope I passes through the upper iron rings of all vertical reinforcement bars, and two ends of the steel wire rope I are fixed by fasteners; and the steel wire rope II passes through the lower iron rings of all vertical reinforcement bars, and two ends of the steel wire rope II are fixed by fasteners.

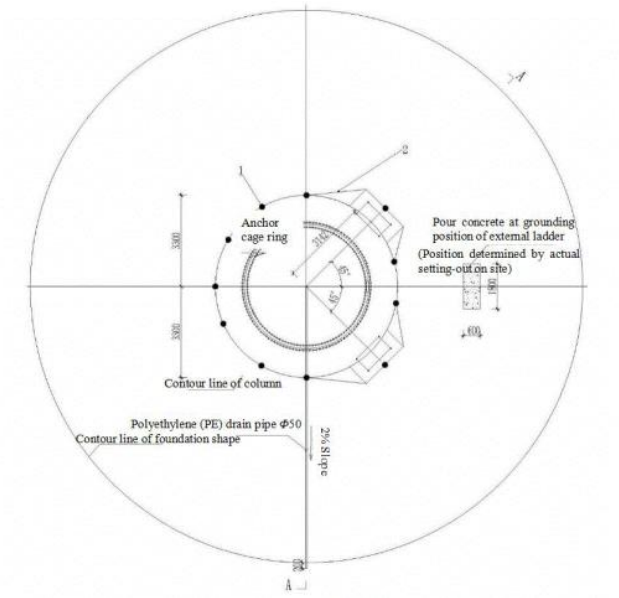

21: 2026/03315. 22: 2026/03/25. 43: 2026/10/29
51: A01G
71: Institute of Vegetables, Hainan Academy of Agricultural Sciences
72: ZHU, Baibi, WANG, Min, WANG, Congcong, HU, Yanping

54: A PLANTING SUPPORT DEVICE FOR PREVENTING MELON VINES FROM TILTING

00: -

The present invention discloses a planting support device for preventing melon vines from tilting, comprising a support frame. The support frame includes a fixed base, and telescopic rods respectively rotatably connected to left and right ends of the fixed base. A lower end of each telescopic rod is provided with a pointed portion. An outer wall of each telescopic rod is provided with hooks along a length direction thereof. One side of an upper end of the fixed base is provided with a base seat. An upper end of the base seat is rotatably connected with a water delivery pipe. A lower end of an outer wall of the water delivery pipe is connected with atomizing nozzles. Both left and right ends of the water delivery pipe are connected with quick couplings.

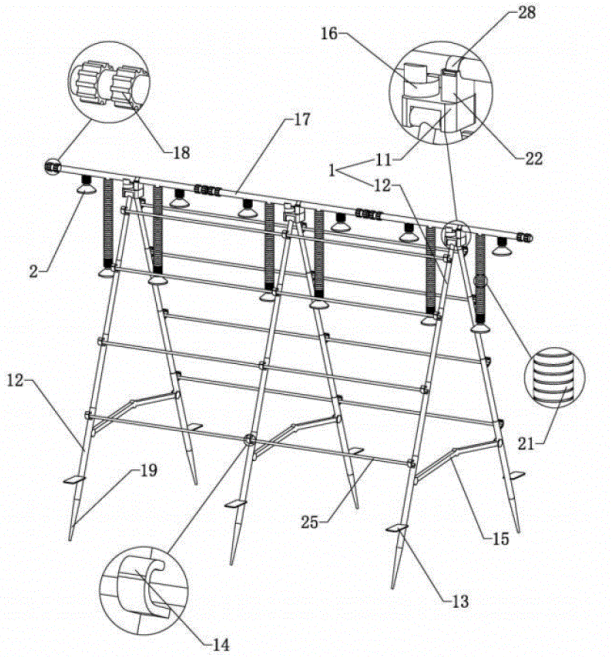

21: 2026/03316. 22: 2026/03/25. 43: 2026/10/29
51: E02D
71: State Grid Heilongjiang Electric Power Co., Ltd. Hegang Suburban Power Supply Branch
72: Yunfeng Zhao, Dakai Li, Wu Sun, Bing Luan, Xukui Zhuang, Xingshun Zhao, Chunyan Zhang, Haoyan Li, Jie Liu, Benchen Guo, Zhigang Wang, Hanlin Liu, Changbo Guo, Wenqi Hui, Yunxiang Zhao, Dongwei Kan, Yang Li, Zhongxin Yang, Kai Yang, Yushan Ge, Zhenyu Zhao, Jianlong Chen, Dongxu Chen, Naiyuan Cui, Yuxuan Lin
33: CN 31: 202521706708.9 32: 2025-08-12

54: POWER TRANSMISSION TOWER FOUNDATION STRUCTURE FOR FRIGID ZONE WETLANDS

00: -

A power transmission tower foundation structure for frigid zone wetlands, comprising an above-ground foundation body and an underground foundation body, the above-ground foundation body is shaped as a truncated cone, and the underground foundation body is shaped as an inverted truncated cone, such that the overall cross-section of the above-ground foundation body and the underground foundation body presents a diamond shape, a cylindrical structure extending into the ground is provided at the bottom of the underground foundation body; a geotextile isolation layer is laid at

the bottom of the underground foundation body, a plurality of galvanized wire mesh layers are embedded at intervals and parallel within the above-ground foundation body and the underground foundation body; the invention provides a diamond-shaped foundation body, utilizing its self-weight and ground reaction force to cooperatively suppress uplift, the galvanized wire mesh layers and gangue backfill layers form a composite shear-resistant structure; the geotextile isolation layer prevents soft soil mixing; the cylindrical underground portion enhances anchoring.

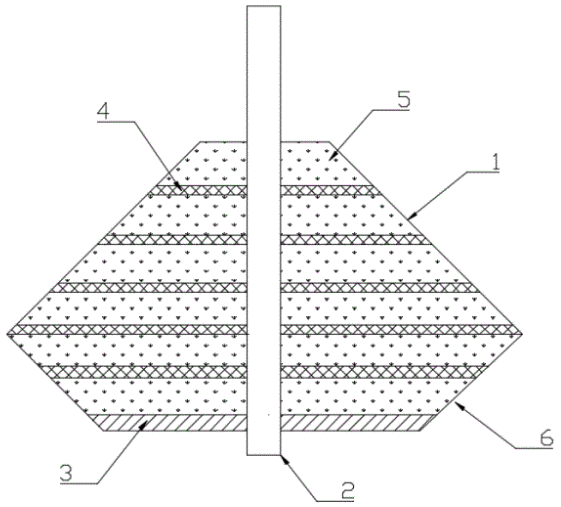

21: 2026/03317. 22: 2026/03/25. 43: 2026/10/29
51: A61L; C08J; C12N
71: CANWELL MEDICAL CO., LTD.
72: YU, Fanglei, FANG, Ming, ZHU, Weiqiang, CAO, Xiaodong, WANG, Gang, FANG, Liang, QIN, Cunqi, ZHENG, Lixia

54: PREPARATION METHOD FOR POLYLACTIC ACID POROUS MICROSPHERES AND USE IN STEM CELL INOCULATION

00: -

The present application relates to the technical field of functional composite materials, and discloses a preparation method for polylactic acid (PLA) porous microspheres and use in stem cell inoculation, including the following steps: (1) dissolving chitosan in an acetic acid water solution, and adding bioactive glass (BAG) nanoparticles to obtain an aqueous-phase solution by ultrasonication; (2) dissolving poly(lactic-co-glycolic acid) (PLGA) or PLA in dichloromethane, and adding an emulsifier to obtain an oil-phase solution; (3) dropping the aqueous-phase solution into an oil-phase solution to obtain a water-in-oil (W/O) primary emulsion; (4) dropping the W/O primary emulsion into a polyvinyl alcohol (PVA) water solution to obtain a double emulsion; and (5) mixing the double emulsion, centrifugally separating, drying, and then immersing in a glutaraldehyde solution for crosslinking treatment to obtain porous microspheres. Porous microspheres prepared by a double emulsion solvent evaporation method in the present application have a more uniform pore size distribution and higher biological activity, thereby serving as excellent stem cell inoculation carriers to meet the adhesion and proliferation of a high proportion of cells.

21: 2026/03318. 22: 2026/03/25. 43: 2026/10/29
51: C09K
71: Shanghai Academy of Agricultural Sciences
72: Yue Zhang, Ke Song, Weiguang Lv, Xianqing Zheng, Xiaoxiao Li

54: A PREPARATION AND APPLICATION METHOD OF A COASTAL SALINE-ALKALI SOIL CONDITIONER UTILIZING INVASIVE PLANT RESOURCES

00: -

The invention provides a preparation and application method of a coastal saline-alkali soil conditioner utilizing invasive plant resources, belonging to the technical field of coastal saline-alkali soil conditioners.The preparation and application method of a coastal saline-alkali soil conditioner utilizing invasive plant resources includes the following components: 0.2–12 parts of hydrothermal carbon from Canadian goldenrod; 0.2–12 parts of modified biochar from Canadian goldenrod; 0.2–6 parts of composite organic fertilizer of black soldier fly larval frass and earthworm castings; 0.02–1.2 parts of composite liquid of tobacco stalk extract and straw fermentation liquid; 0.02–0.15 parts of composite nutrient solution of Hogland nutrient solution and garden test nutrient solution.Through hydrothermal carbonization, pyrolytic carbonization, and acid modification, the invention transforms traditionally harmful invasive biomass into the core functional components of a carbon-based soil conditioner. It achieves harmless disposal and high-value utilization of invasive plants from the source, effectively reducing the risk of invasive plant spread

and control costs, while avoiding secondary ecological issues such as pesticide residues and soil pollution.

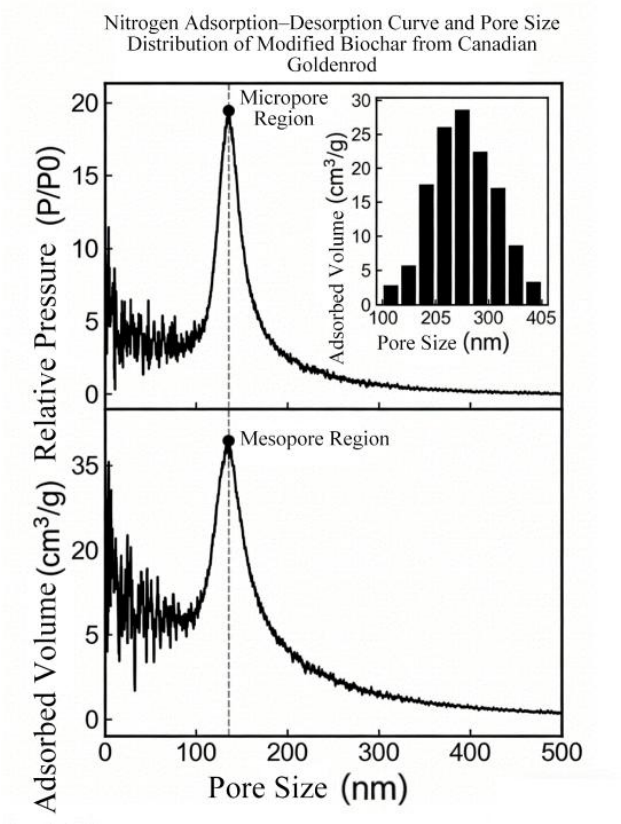

21: 2026/03324. 22: 2026/03/25. 43: 2026/10/30
51: B01D
71: XIAMEN UNIVERSITY OF TECHNOLOGY
72: YE, Qian, YAN, Bin, JING, Zirui, LIU, Chao, LIU, Bin, WU, Hanbin, CHEN, Shuixuan
54: CASTING SOLUTION COMPOSITION AND CARBON-BASED MEDIATOR MEMBRANE
00: -
The present disclosure provides a casting solution composition and a carbon-based mediator membrane, and relates to the technical field of membranes. The casting solution composition comprises the following raw material components by 100% weight: 12-20% of PVDF, 0.1-2% of modified carbon nanotubes, 1-3% of cross-linking agents, 0.5-3% of anthraquinone compounds, and the balance of organic solvents, wherein the modified carbon nanotubes are obtained by performing surface grafting treatment on carbon nanotubes, and a grafted structure subjected to surface grafting treatment comprises polyether chain segments; preferably, the grafted structure also comprises organic fluorine groups. The carbon-based mediator membrane obtained from the casting solution of the present disclosure has favorable treatment performance for nitrogen-containing wastewater.

21: 2026/03386. 22: 2026/03/26. 43: 2026/10/29
51: H01L
71: Henan University of Urban Construction
72: WANG Yarui, WANG Chaoyong, WANG Kai, LIU Le, GUO Junji
54: RARE EARTH ELEMENT-DOPED PEROVSKITE SOLAR CELL AND PREPARATION METHOD THEREOF
00: -
The invention discloses a rare earth element-doped perovskite solar cell and a preparation method thereof, belonging to the technical field of solar cells. The cell includes a substrate, a first charge transport layer, a perovskite light absorption layer, an interface passivation layer, a second charge transport layer and an electrode; the perovskite light absorption layer is doped with a first rare earth element, and the first charge transport layer is doped with a second rare earth element. The invention realizes the synergistic efficiency improvement of the trinity of “energy level regulation - spectral broadening - defect passivation”. Test results show that the photoelectric conversion efficiency of the cell of the invention reaches 25.5%, which is significantly better than that of the single doping scheme, and the cell has a good application prospect.

21: 2026/03387. 22: 2026/03/26. 43: 2026/10/29
51: F25D
71: Suzhou Santuo Cold Chain Technology Co.,Ltd
72: Haibing Du, Ruiqiu Du
54: A PHASE-CHANGE COOLING SYSTEM, COLD STORAGE FACILITY, AND OPERATING STRATEGY FOR THE COLD STORAGE FACILITY
00: -
The present invention relates to the field of cold storage technology, and to a cold storage device comprising M×N cold storage units and N air-cooling units, where M and N are both positive integers. Each cold storage unit comprises a support frame and a plurality of cold storage panels. Each cold storage panel comprises a housing and a cold storage substance filled within the housing. The housing is provided with throat holes, and the

support frame passes sequentially through the throat holes of the multiple cold storage panels to secure them, thereby forming a cold storage unit. The air-cooling unit is used to blow air onto the cold storage panels to increase the rate at which the panels store or release cold energy. The present invention also relates to a cold storage facility comprising the cold storage device and further comprising A rows of shelving. Cold storage devices are respectively arranged on the A rows of shelving. Goods are placed between adjacent rows of shelving, where A is a positive integer greater than or equal to 3. The present invention further relates to an operating strategy for the cold storage facility, designed to reduce the amplitude of temperature fluctuations within the facility and provide a stable and balanced storage environment for the goods.

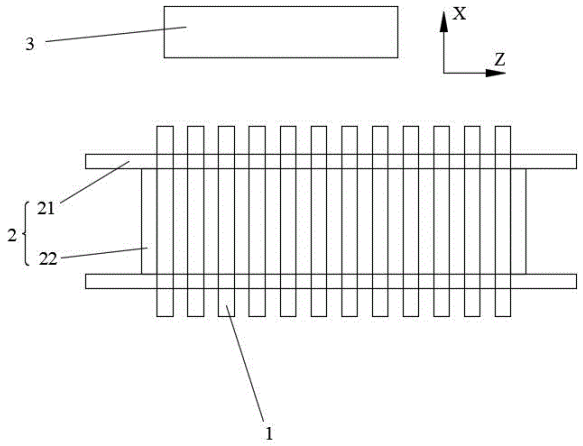

21: 2026/03391. 22: 2026/03/26. 43: 2026/10/29
51: C09D
71: Chizhou University
72: Zichun Zhu, Min Li, Junyan Ge, Ruixia Wang, Jiangjie Wang, Huihui Hao, Miao Peng

54: METHOD FOR SYNTHESIZING GRAPHENE COMPOSITE MODIFIED NANO-CALCIUM CARBONATE

00: -

The invention provides a method for synthesizing graphene composite modified nano-calcium carbonate, belonging to the technical field of inorganic nanocomposite material preparation. The method achieves efficient composite modification through a five-step process: first, a uniform and stable graphene oxide dispersion is prepared; then, a calcium hydroxide slurry pretreated with an ionic liquid is prepared; subsequently, an in-situ composite carbonation reaction is carried out, supplemented by intermittent ultrasound and a composite crystal form control agent to regulate the product morphology; next, a composite surface modifier is used for hydrophobic coating; finally, the finished product is obtained through post-treatment. Through the synergistic effects of the composite additive system, ionic liquid regulation, and in-situ carbonation, the invention achieves a high activation degree and uniform particle size distribution of the finished product, with excellent dispersibility and mechanical properties. The process is simple, controllable, environmentally friendly, and suitable for large-scale industrial production. It is widely applicable in the preparation of high-performance filler materials for fields such as rubber, plastics, and coatings.

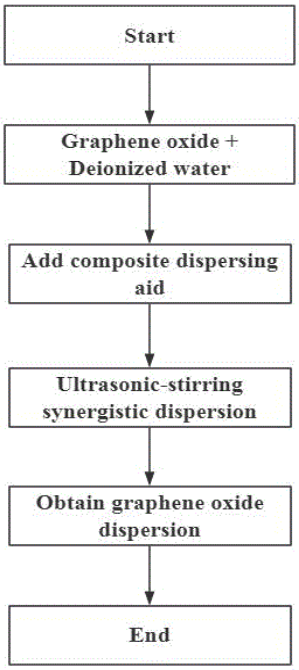

21: 2026/03392. 22: 2026/03/26. 43: 2026/10/29
51: G01D
71: Zhejiang Industry & Trade Vocational College
72: Yimeng Bao, Chengyu Ye, Jingjian Weng, Wenjing Zhang, Chenjian Pan, Zhouhao Xie, Zhihao Si, Lufeng Xiang, Yuhan Xu

54: INTELLIGENT DETECTION AND REPAIR DECISION METHOD AND SYSTEM FOR PIPELINE ROBOT

00: -

This invention pertains to pipeline robot inspection technology, disclosing an intelligent inspection and repair decision-making method and system comprising: S1: Image acquisition; S2: Defect identification; S3: Collaborative positioning; S4: Repair decision; S5: Repair execution; S6: Feedback evaluation. The invention employs a deep learning model to perform real-time defect recognition on pipeline inner wall images, automatically outputting defect types, pixel coordinates, and contour information, thereby significantly improving detection accuracy and efficiency. By integrating encoder and camera unit calibration parameters, it precisely converts defect pixel coordinates to the pipeline's global coordinate system, enabling high-precision collaborative defect localization. This overcomes the large positioning deviations characteristic of traditional methods. The repair decision unit intelligently matches repair materials, spraying parameters, and path patterns from a process parameter database based on defect type and contour, generating optimized spraying trajectories to adapt repair processes to diverse defect characteristics.

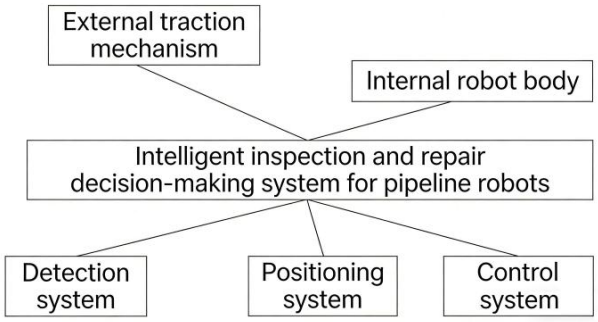

21: 2026/03415. 22: 2026/03/26. 43: 2026/10/30
51: G06Q
71: ZHEJIANG DONGHONG ELECTRONIC CO., LTD.
72: HUANG, Long, MEI, Rongzhen, ZHOU, Jianchuan, ZHANG, Junjie, GONG, Zhenfeng
33: CN 31: 202510711059X 32: 2025-05-29
54: ARTIFICIAL INTELLIGENCE ENGINE-OPTIMIZED POWER QUALITY MONITORING METHOD AND DEVICE THEREOF
00: -
The present invention provides an artificial intelligence (AI) engine-optimized power quality monitoring method and device thereof. The method includes the following steps: S1: acquiring voltage waveform data collected by monitoring equipment to obtain the sequence distribution of short time window data of the voltage waveform; S2: obtaining the sequence distribution of structured coding vectors of key power quality parameters; S3: obtaining timing context coding vectors of key power quality parameters; S4: generating reconstructed voltage waveform data; and S5: determining whether there is an abnormal precursor based on the reconstruction error. The disclosed AI engine-optimized power quality monitoring method and device utilize the learning capability of an AI model for waveform characteristics under normal power conditions, enabling early warning of power quality disturbance events, to facilitate preventive maintenance and active intervention.

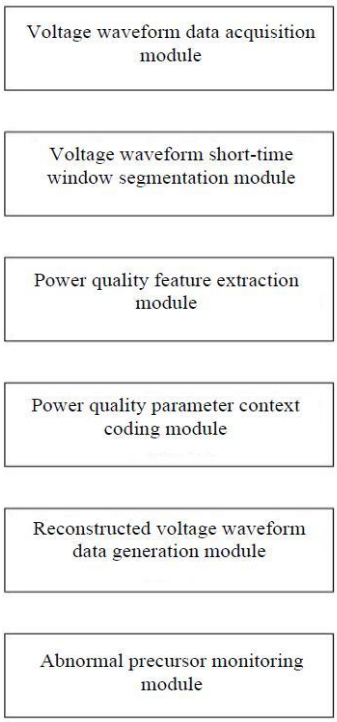

21: 2026/03436. 22: 2026/03/27. 43: 2026/10/29
51: G06F; G01M
71: Harbin Engineering University
72: SHI, Xiujiang, HUA, Deliang, CAI, Zehong, DONG, Qingbing, WU, Hongxing, JIAN, Yusheng, GUAN, Bailing, LI, Jinzhao, LI, Wanyou, LU, Xiqun, ZHANG, Yaoqi, WANG, Rui, SUN, Wen, QIU, Zhuoyi, LIU, He, SHI, Fangpeng, FEI, Yunfei, YANG, Tianfu
33: CN 31: 202511286838.6 32: 2025-09-09
54: METHOD AND SYSTEM FOR ANALYZING SHAFTING VIBRATION CHARACTERISTICS

BASED ON ELASTOHYDRODYNAMIC LUBRICATION

00: -

Provided are a method and a system for analyzing shafting vibration characteristics based on elastohydrodynamic lubrication, including: determining an entrainment velocity, a time-varying curvature radius, and a contact load at a contact point in a valve-fuel supply cam pair; inputting these parameters into a friction analysis model to calculate a total interface friction of the valve-fuel supply cam pair over time throughout an entire working cycle; determining a system excitation vector of the valve-fuel supply cam pairs based on the time-varying friction excitation at any moment on the curve; establishing a coupling analysis model of torsional vibration characteristics of the camshaft system; and solving shafting torsional vibration differential equations to obtain an influence law of a time-varying friction on instantaneous vibration characteristics of the camshaft system.

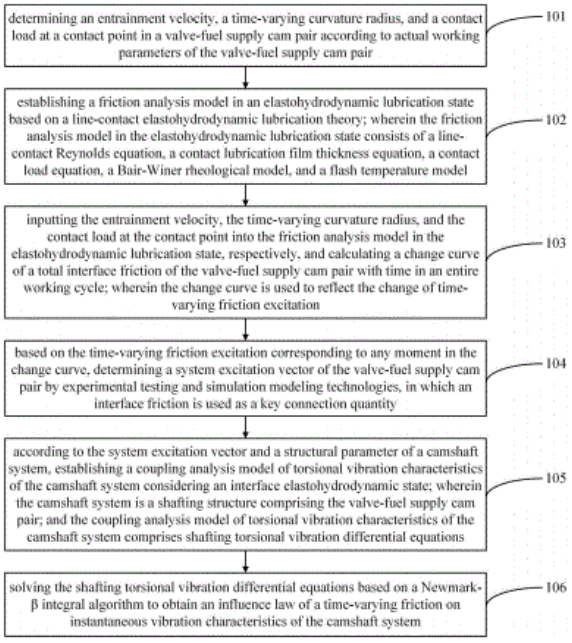

21: 2026/03438. 22: 2026/03/27. 43: 2026/10/29
51: F16M
71: POLY TECHNOLOGIES, INC
72: WANG, Jiaxin, QIN, Zhen, LIANG, Shenwei, LI, Sha, WANG, Xiaoyu, ZHANG, Jiuqi, ZHAO, Guangtong, HUI, Xuehan, XIE, Zheng

54: DISPLAY AND CONTROL CONSOLE BASE CONVENIENT FOR DISASSEMBLY AND MAINTENANCE AND MOVABLE FOR TRANSPORTATION

00: -

The application belongs to a display and control console base convenient for disassembly, maintenance, and movable for transportation, with outer support and inner support. The inner support slidably connected to the outer support, an inner side of outer support arranged with a lifting push rod to drive the inner support to slide up and down, an upper side of the inner support mounted with an outer sleeve, an inner side of the outer sleeve rotationally connected to a steering shaft, other end of steering shaft extends out of the outer sleeve rotationally connected to an adapter plate, other end of adapter plate arranged with display control console mounting plate; an outer side of steering shaft sleeved with movable end-face gear, inner side of outer sleeve slidably connected to a guide sleeve, and inner side of the guide sleeve mounted with a fixed end-face gear corresponding to the movable end-face gear.

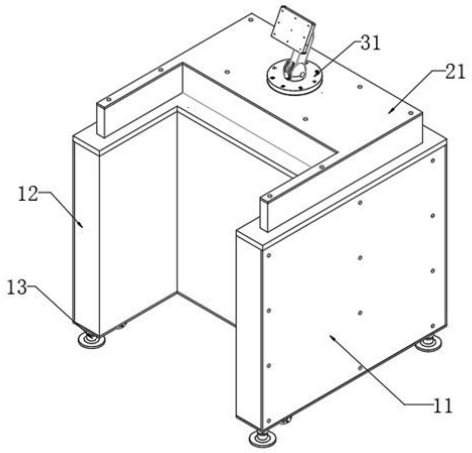

21: 2026/03439. 22: 2026/03/27. 43: 2026/10/29
51: G05G; H05K
71: POLY TECHNOLOGIES, INC
72: LI, Sha, LIANG, Shenwei, QIN, Zhen, WANG, Jiaxin, XIE, Zheng, WANG, Xiaoyu, ZHANG, Jiuqi, ZHAO, Guangtong, HUI, Xuehan

54: WATERPROOF AND EASILY REPLACEABLE DISPLAY AND CONTROL CONSOLE PANEL

00: -

The application belongs to the technical field of control panels, and to waterproof and easily replaceable display and control console panel, including a display and control console and panel.

The console is arranged with display screen monitoring an operational status of equipment, arranged at a front side console, a replacement plate is slidably arranged on the control panel, with top part arranged with key caps, top part arranged with a circuit board with contact points, the key caps correspond to contact points on the circuit board, and bottom parts of key caps arranged with elastic shaft body in contact with contact points; and waterproof sealing rings arranged at junctions between cover panel and key caps. Combined with an insertion connection sealing structure of sliding rails and sliding rail grooves, a double waterproof barrier is formed.

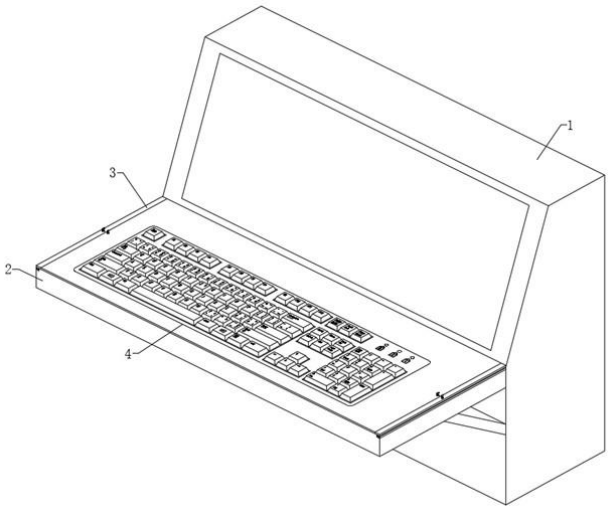

21: 2026/03441. 22: 2026/03/27. 43: 2026/10/29
51: A47B; F16H
71: POLY TECHNOLOGIES, INC
72: LIANG, Shenwei, LI, Sha, WANG, Jiaxin, QIN, Zhen, HUI, Xuehan, XIE, Zheng, WANG, Xiaoyu, ZHANG, Jiuqi, ZHAO, Guangtong
54: COMPUTER DESK WITH CONVENIENT STORAGE AND ADJUSTMENT
00: -
The present application belongs to the technical field of computer desks, and to a computer desk with convenient storage and adjustment, including desk plates, fixed adapter blocks, distance-adjusting lead screws and rhombic telescopic frames. Two desk plates symmetrically arranged and hinged to each other. The fixed adapter blocks are fixed on lower sides of the desk plates. The distance-adjusting lead screws rotatably mounted on the lower sides of the desk plates. Outer sides of the distance-adjusting lead screws threaded connection with movable adapter blocks, the movable adapter blocks slidably connected to the desk plates. Two connection points at upper ends of the rhombic telescopic frames hinged to adapter rods, two groups of adapter rods are rotatably connected to the fixed adapter blocks and the movable adapter blocks, and the fixed adapter blocks and the movable adapter blocks are detachably connected to positioning pins for fixing the adapter rods.

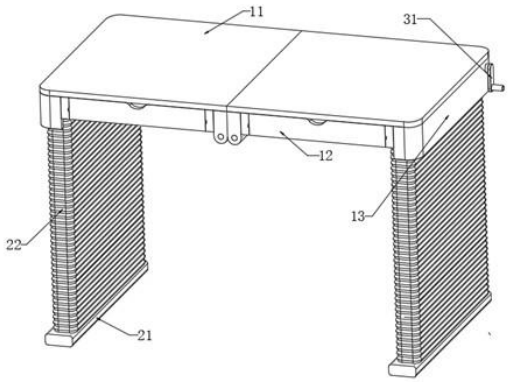

21: 2026/03442. 22: 2026/03/27. 43: 2026/10/29
51: B28D; C25C
71: UNIVERSITY OF SCIENCE AND TECHNOLOGY BEIJING
72: WANG, Xuemin, CONG, Jinghua, CHENG, Nuo, LI, Xiucheng
33: CN 31: 202510385005,9 32: 2025-03-28
54: HIGH-TEMPERATURE-RESISTANT AND HIGH-CONDUCTIVITY STEEL FOR ANODE STEEL CLAW IN ELECTROLYTIC ALUMINUM AND PREPARATION METHOD THEREOF
00: -
The invention provides a high-temperature-resistant and high-conductivity steel for anode steel claw in electrolytic aluminum and preparation method thereof, and relates to technical field of steel materials for production in electrolytic aluminum industry. According to the present invention, trace alloy elements are added, the alloy elements and a proportion thereof are controlled, and a corresponding preparation process is combined to control a solid solution and precipitation amount, so that a novel high-conductivity steel with room/high temperature properties for anode steel claw in electrolytic aluminum is obtained. According to the present invention, the high-temperature-resistant

and high-conductivity steel for anode steel claw in electrolytic aluminum is prepared by regulating and controlling a (Ti + Mo)/C ratio, adding Cu element, selecting low-cost raw materials, carrying out heat preservation treatment of a soaking section before hot rolling and carrying out stage control of rolling reduction during hot rolling; the method is simple and easy to operate, green and environmentally friendly, low in cost, short in process, high in efficiency, wide in application range and beneficial to industrial large-scale production and popularization.

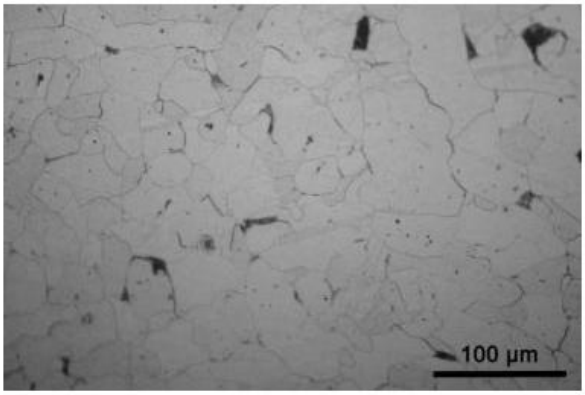

21: 2026/03443. 22: 2026/03/27. 43: 2026/10/29
51: C21D; C22C
71: UNIVERSITY OF SCIENCE AND TECHNOLOGY BEIJING
72: WANG, Xuemin, CHENG, Nuo, CONG, Jinghua, LI, Xiucheng
33: CN 31: 202510385116.X 32: 2025-03-28
54: HIGH-CONDUCTIVITY STEEL FOR STEEL CLAW IN ELECTROLYTIC ALUMINUM AND PREPARATION METHOD THEREOF
00: -
The present invention provides a high-conductivity steel for steel claw in electrolytic aluminum and preparation method thereof, which relates to technical field of steel materials for production in electrolytic aluminum industry. The steel comprises the following chemical composition by weight percentage: C 0.01-0.05%, Ti 0.055-0.095%, Cu 0.08-0.18%, P ≤0.007%, S ≤0.006%, and remainder is Fe and inevitable trace chemical elements; where C and Ti simultaneously meet a relationship that 1.1≤Ti/C≤3.2. According to the present invention, the high-conductivity steel for steel claw in electrolytic aluminum is prepared by regulating and controlling C, Ti, and Cu, selecting low-cost raw materials, performing homogenization heat treatment before hot rolling and performing stage control on rolling reduction in a hot rolling process; and the method is simple and easy to operate, green and environmentally friendly, low in cost, short in process, high in efficiency, wide in application range and beneficial to industrial large-scale production and popularization.

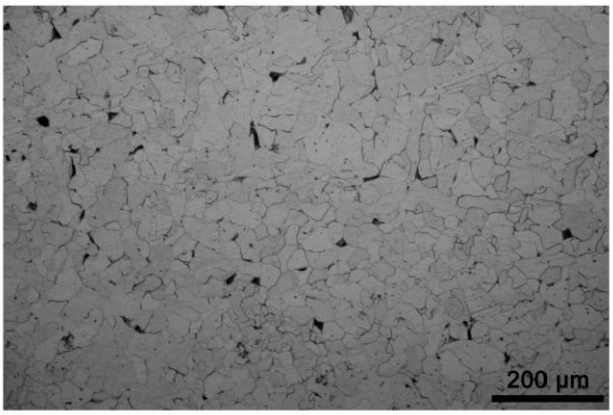

21: 2026/03444. 22: 2026/03/27. 43: 2026/10/29
51: E01C; E02D; A01G
71: PASTORAL WATER CONSERVANCY SCIENCE RESEARCH INSTITUTE OF THE MINISTRY OF WATER RESOURCES
72: MIAO, Henglu, WANG, Lixia, FENG, Xiu, YUE, Zhengwen, LV, Zhiyuan, JIN, Lingna, WU, Boren, WANG, Sijing, BI, Jiawei, YUCHI, Wensi, CHENG, Bo, GAO, Lei
54: SAND-FIXING GREENING GRID
00: -
The present application discloses a sand-fixing greening grid, including a main grid frame, main planting units and auxiliary planting units. The main grid frame has a plurality of grid units, the main planting units include main annular rings and main net bags; the main annular rings are detachably connected to node connection points of the plurality of grid units; and the main net bags are wrapped around the main annular rings and form main planting cavities for growing plants, and the main net bags are made of degradable material; and the auxiliary planting units include auxiliary annular rings and connecting ropes, and the auxiliary annular rings are located at inner parts of the grid units; and a plurality of connecting ropes are arranged, and are respectively connected to the auxiliary annular rings and frames of the grid units.

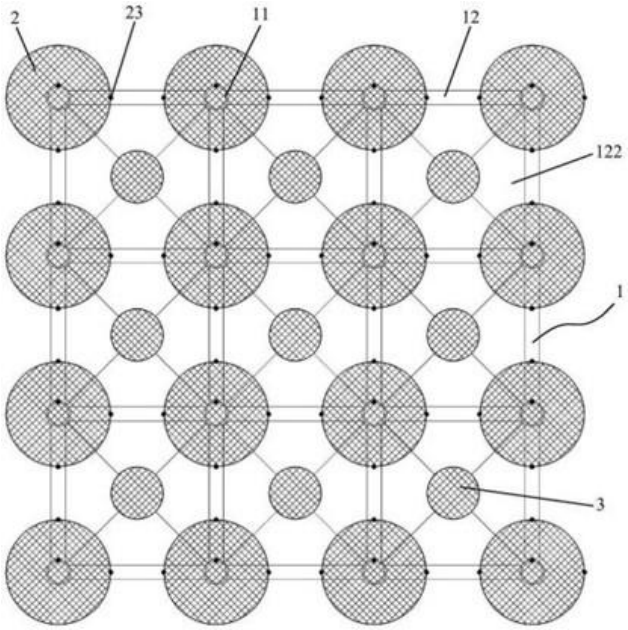

21: 2026/03445. 22: 2026/03/27. 43: 2026/10/29
51: B60R
71: PALWINDER SINGH
72: PALWINDER SINGH
54: A SYSTEM AND MECHANISM FOR VEHICLE IMPACT REDUCTION USING PRESSURIZED PISTON ACTUATION
00: -
Present invention describes a mechanism for providing safety to a vehicle. The mechanism comprises a plurality of heavy-duty pistons installed within chassis of the vehicle. The plurality of heavy-duty pistons is configured to pushed out for reducing the shock experienced due to an accident. The mechanism further comprises a highly pressurized air cylinder connected to the plurality of heavy-duty pistons. The highly pressurized air cylinder pushes the plurality of heavy-duty pistons upon detection of the accident. The mechanism further comprises sensors communicatively coupled with the highly pressurized air cylinder. The sensors are configured to detect occurrence of the accident of the vehicle.

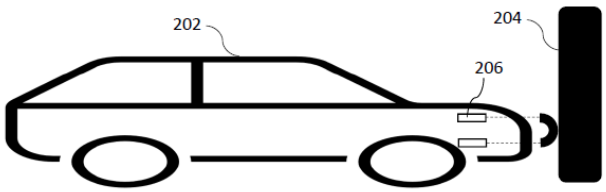

21: 2026/03446. 22: 2026/03/27. 43: 2026/10/29
51: G06F
71: Henan University of Urban Construction
72: MAN Yuan, Cui Yanwei, Guo Weiwei, SHI Luke, Yin Xiaojing, Li Jiangle
54: AN ASSEMBLED PIPELINE PRE-EMBEDDED STRUCTURE CONVENIENT FOR ON-SITE INSTALLATION
00: -
The invention discloses an assembled pipeline pre-embedded structure convenient for on-site installation, relating to the technical field of construction engineering, which comprises a round pipe and a corrugated pipe; the end of the round pipe is provided with an insertion groove, a limit groove and a compression groove; an insert is arranged at the end of the corrugated pipe; in the circumferential direction of the round pipe, the widths of the compression groove, the limit groove and the insertion groove increase in sequence. The invention adopts an assembled plug-in connection mode, inserting the insert at the end of the corrugated pipe into the sequentially communicated insertion groove, limit groove and compression groove from the end of the round pipe, thus simplifying the operation steps of on-site installation.

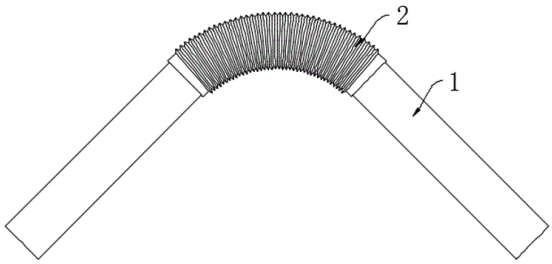

21: 2026/03447. 22: 2026/03/27. 43: 2026/10/29
51: E04B
71: Henan University of Urban Construction
72: MAN Yuan, Cui Yanwei, Guo Weiwei, SHI Luke, Yin Xiaojing, Li Jiangle
54: A VERTICAL CONNECTION STRUCTURE OF PREFABRICATED SHEAR WALL CONVENIENT FOR CONSTRUCTION
00: -
The present invention discloses a vertical connection structure of prefabricated shear wall convenient for construction, relating to the technical field of prefabricated shear walls. The structure comprises: a floor shear wall, the top of which is provided with reserved steel bars; a vertical shear wall, inside which a pre-embedded steel bar space is reserved,

and the exterior of the pre-embedded steel bar space is communicated with a grouting hole and an air outlet; a limiting sleeve, which can be fittingly connected to the inner wall of the grouting hole, and the inner wall of the limiting sleeve is provided with a limiting groove; a plurality of elastic plates, which are fixedly connected to the bottom inner wall of the limiting sleeve, and one end of each elastic plate is located on the moving path of the grouting pipe. In the present invention, the elastic plates are pressed to drive the limiting sleeve to generate annular extrusion force, so that tightly fitting sealing surfaces are formed between the limiting sleeve and the inner wall of the grouting hole as well as between the elastic plates and the outer wall of the grouting pipe. The double sealing structure effectively avoids grout leakage of the grouting material from the gap between the grouting hole and the pipe during grouting, ensures grouting quality and reduces material waste.

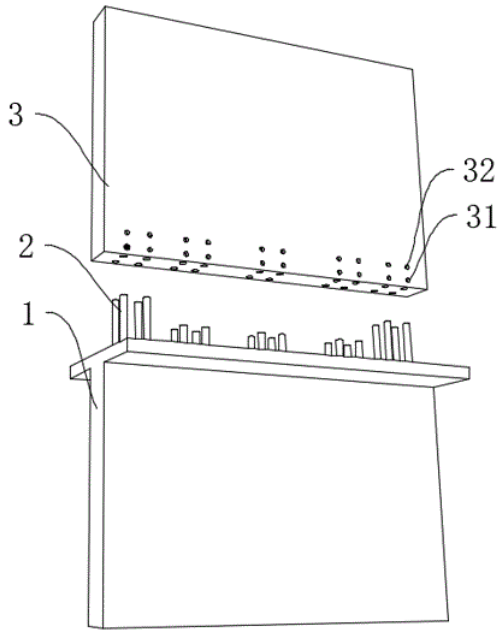

21: 2026/03448. 22: 2026/03/27. 43: 2026/10/29
51: F24S
71: Suzhou Santuo Cold Chain Technology Co.,Ltd
72: Haibing Du, Ruiqiu Du
54: AN OFF-GRID COMBINED COOLING, HEATING, ELECTRICITY AND STORAGE SYSTEM
00: -

The present invention relates to the field of heating technology and discloses an off-grid dual-supply and dual-storage system for heating, cooling, and electricity, comprising: a thermal storage module, including a first thermal storage tank and a second thermal storage tank; a power storage assembly, including a battery pack; and a photovoltaic-thermal integrated device, which is connected to the first thermal storage tank and electrically connected to the battery pack, wherein the first thermal storage tank is capable of absorbing heat from water discharged by the photovoltaic-thermal integrated device to store thermal energy; a solar heat pump, connected to the second thermal storage tank and electrically connected to the battery pack, wherein the second thermal storage tank is capable of absorbing heat from water discharged by the solar heat pump during heating operation to store thermal energy, and is also capable of releasing heat to water discharged by the solar heat pump during cooling operation to store cooling capacity. The off-grid dual-supply, dual-storage system for heating, cooling, and electricity disclosed in this invention is not connected to the power grid and can provide users with electricity, hot water, heating, and cooling, thereby achieving functional diversification of the system.

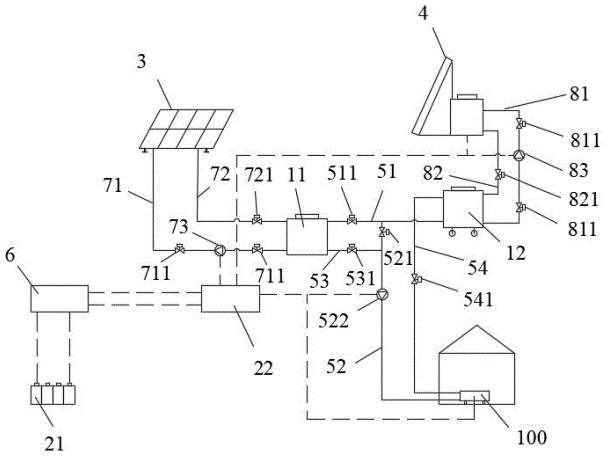

21: 2026/03451. 22: 2026/03/27. 43: 2026/10/29
51: A01D
71: Dr. B.R. Ambedkar National Institute of Technology, Varun Sharma, Rajeev Verma, Rakesh Kumar, Rahul Soni, Brijesh Kumar Yadav
72: Varun Sharma, Rajeev Verma, Rakesh Kumar, Rahul Soni, Brijesh Kumar Yadav

54: SPIRAL DRIVE MECHANISM-BASED MANUALLY OPERATED GRASS TRIMMING MACHINE

00: -

The present invention relates to a manually operated grass trimming machine (100) configured to convert reciprocating manual motion into rotary motion for grass cutting operations. The machine comprises a blade assembly (2) including one or more blades (1) coupled to a blade connector (3). The blade connector (3) is connected to an outer rod (7) configured to transmit rotational motion to the blade assembly (2). A ratchet mechanism including a ratchet (8) and an outer ratchet (6) is positioned within the outer rod (7). The machine further comprises a spiral rod (10) operatively associated with the ratchet (8) and a rod (9) connected to the spiral rod (10) for transmitting reciprocating motion. A handle rod (4) connected to the rod (9) through a tee (12) enables manual actuation of the mechanism, while a stopper bush (11) controls axial movement of the spiral rod (10).

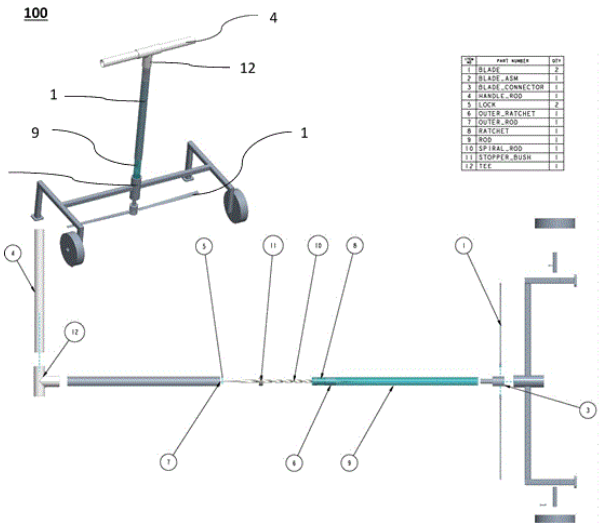

21: 2026/03452. 22: 2026/03/27. 43: 2026/10/30
51: C02F
71: T. M. Mohamed Usman, S. Adishkumar, J. Rajesh Banu, S. Kavitha
72: T. M. Mohamed Usman, S. Adishkumar, J. Rajesh Banu, S. Kavitha

54: A METHOD AND SYSTEM FOR PRODUCING BIOHYDROGEN FROM WASTE ACTIVATED SLUDGE IN AN ENERGY-EFFICIENT MANNER

00: -

The present invention relates to an energy-efficient method for producing biohydrogen from waste-activated sludge through phase-separated pretreatment, and a system for the same. The method comprises deflocculating waste-activated sludge using potassium peroxymonosulphate (PPMS) at 0.0015-0.015 g/g suspended solids to disrupt extracellular polymeric substances, followed by microwave pretreatment at 900 W and 2450 MHz for 1-30 minutes. The PPMS-MW pretreatment achieves 30-40% COD solubilization at 8000-10000 kJ/kg total solids, significantly lower than conventional MW pretreatment. Biohydrogen potential assay under anaerobic conditions at 35°C yields 70-85 mL/g volatile solids. The system comprises deflocculation unit, microwave pretreatment unit with polytetrafluoroethylene vessel, and biohydrogen reactor is also disclosed. This phase-separated approach provides substantial energy savings while enhancing biohydrogen production from waste-activated sludge.

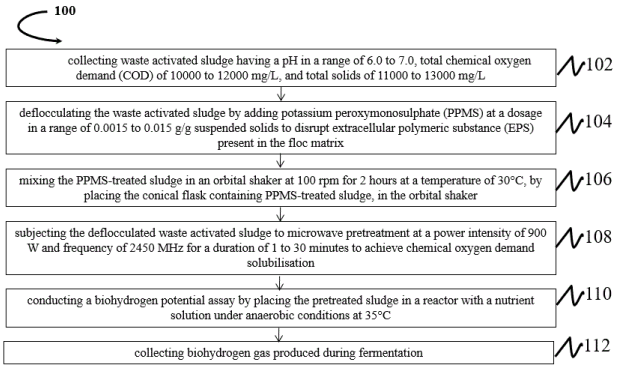

21: 2026/03455. 22: 2026/03/27. 43: 2026/10/30
51: B01J
71: RELIANCE INDUSTRIES LIMITED
72: GUPTA, Virendrakumar, MISHRA, Anurag, PATIL, Harshad, Ramdas
33: IN 31: 202321065904 32: 2023-09-30

54: CATALYST COMPOSITION FOR OLIGOMERIZATION AND A PROCESS FOR ITS PREPARATION

00: -

The present disclosure relates to a catalyst composition for oligomerization and a process for its preparation The present disclosure particularly relates to a catalyst composition for tetramerization of ethylene. The catalyst composition of the present disclosure produces 1-octene with minimum undesirable polyethylene and C10+ olefin by-

products (selectivity >90 mass%). The catalyst composition of the present disclosure provides selective production of 1-octene and has significant economic advantage over conventional catalysts.

21: 2026/03456. 22: 2026/03/27. 43: 2026/10/30
51: H02J
71: Electric Power Science Research Institute of Guangxi Power Grid Co., Ltd., Chongqing University
72: WU Xiaorui, CHEN Shaonan, LIANG Jiatian, XIAO Jing, WU Ning, CHEN Weidong, GUO Min, GUO Xiaoxuan, MO Yuhong
33: CN 31: 2024108771839 32: 2024-07-02
54: WPT SYSTEM FOR REALIZING CONSTANT CURRENT AND CONSTANT VOLTAGE OUTPUT ON BASIS OF VARIABLE-STRUCTURE HYBRID TOPOLOGY
00: -
The present invention relates to the technical field of wireless power transfer (WPT), and specifically provides a WPT system for realizing constant current and constant voltage output based on a variable-structure hybrid topology. The system designs a variable-structure hybrid topology, in which input ends of a capacitor-inductor-capacitor-series (CLC-S) topology and a series-capacitor-inductor-capacitor (S-CLC) topology are connected in series, and output ends of the CLC-S topology and the S-CLC topology are connected in parallel to form a front-end circuit, which is mainly used to improve an anti-offset performance of the system. On this basis, a variable-structure T-type compensation topology is added to the output end to form a back-end T-type circuit, and the switching between constant current and constant voltage output is achieved by changing a structure of the back-end T-type circuit. Meanwhile, to further improve the anti-offset performance of the system, compensation parameters of the system are designed. Experiments verify that the WPT system for realizing constant current and constant voltage output based on a variable-structure hybrid topology provided by the present invention can realize the switching between constant current and constant voltage, and has high anti-offset performance in a constant voltage mode and a constant current mode.

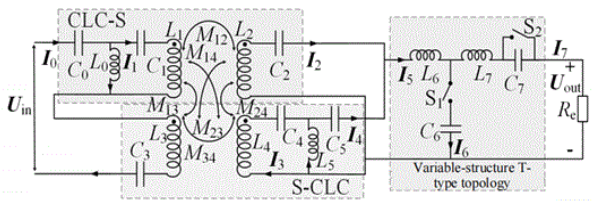

21: 2026/03477. 22: 2026/03/27. 43: 2026/10/13
51: H04W
71: NOKIA TECHNOLOGIES OY
72: GOYAL, Sanjay, KOSKELA, Timo
33: US 31: 63/602,487 32: 2023-11-24
54: CHANNEL STATE INFORMATION REPORTING PRIORITY FOR LOWER-LAYER TRIGGERED MOBILITY
00: -
A method is provided that includes determining that at least two channel state information (CSI) reports are to be reported. The method includes calculating priority values associated with the at least two CSI reports, at least one of the priority values calculated based on a determination that at least one of the at least two CSI reports is a lower-layered triggered mobility (LTM) CSI report. The method includes determining that a time occupancy of physical channels scheduled to cany the at least two CSI reports at least partially overlap on a carrier, the at least two CSI reports thereby said to collide. And the method includes sending one or more of the at least two CSI reports that are said to collide based on the priority values.

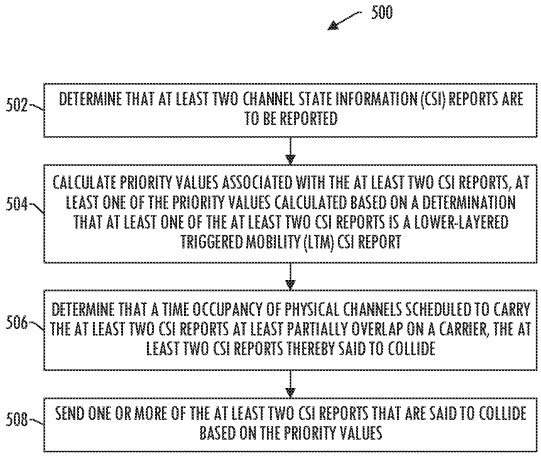

21: 2026/03518. 22: 2026/03/30. 43: 2026/10/30
51: G06F
71: Yangtze Normal University

72: Zhang Ping, Huang Qian, Wen Tao, Jian Tao, Ying Sai
33: CN 31: 2026101549165 32: 2026-02-03
54: GROUND STRESS INVERSION METHOD FOR HIGH GEOTHERMAL TUNNELS BASED ON REFINED 3D GEOLOGICAL MODELS
00: -
The present invention relates to the field of tunnel engineering technology, addressing the shortcomings of existing methods that neglect the influence of thermal stress and the inability of geological models to dynamically adapt to the construction process. It provides a method for inverting the ground stress in high-geothermal tunnels based on a refined three-dimensional geological model. This method integrates multi-source geological information from the exploration and construction stages to construct a refined three-dimensional geological model that dynamically updates as tunnel excavation progresses. Thermal stress is calculated based on the geothermal gradient, rock thermodynamic parameters, and burial depth. After separating the thermal stress from the measured ground stress, the tectonic stress field is obtained through inversion using support vector regression (SVR). The true in-situ stress distribution is then derived by superimposing the thermal stress field. As tunnel excavation advances, the above process is repeated to achieve dynamic updates of the ground stress field. The present invention enhances the accuracy of the geological model and the precision of ground stress inversion, enabling dynamic adaptation of the ground stress field. It provides precise data support for construction safety warnings and support design optimization in high-geothermal tunnels.

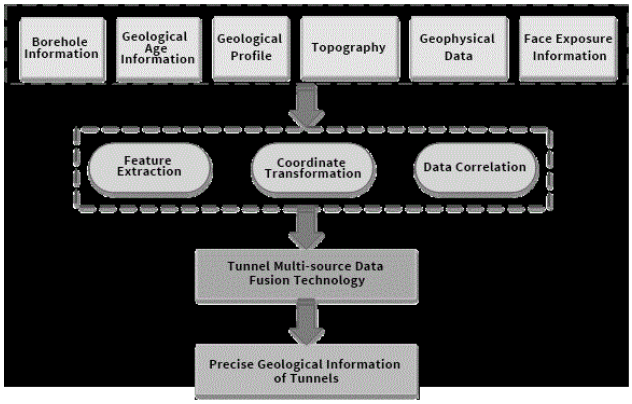

21: 2026/03519. 22: 2026/03/30. 43: 2026/10/30

51: G06F
71: Yangtze Normal University
72: Liao Shiju
33: CN 31: 2026101552952 32: 2026-02-03
54: OPTIMIZATION METHOD FOR URBAN PUBLIC SERVICE FACILITY LAYOUT BASED ON LOW-CARBON GOALS
00: -
The present invention relates to the field of energy management technology, particularly to a method for optimizing the layout of urban public service facilities based on low-carbon goals, comprising step S1: obtaining geographic data and power system topology data of the urban planning area, establishing spatial mapping relationships between urban geographic grid units and distribution network power supply nodes; Step S2: Based on power flow tracking technology, calculate the real-time power carbon emission intensity of each distribution network supply node at different time periods; Step S3: Based on the service attributes of the planned facility, calculate the transportation carbon emissions generated when the facility is located in the candidate geographic grid unit and the basic operational carbon emissions of the facility itself; Step S4: Based on the mobile energy storage hysteresis feedback mechanism, the computing facility is located in the candidate geographic grid unit. In the present invention, by introducing power flow tracking technology, the real-time carbon emission intensity of different distribution network nodes in the city at different time periods is calculated, reducing the power carbon footprint during the long-term operation of facilities.

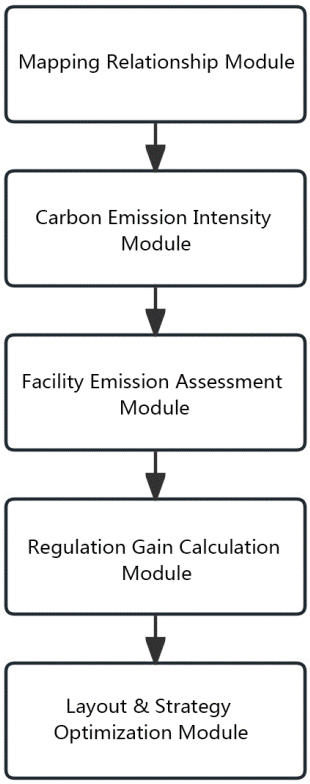

21: 2026/03522. 22: 2026/03/30. 43: 2026/10/30
51: B03B
71: Beijing Research Institute of Chemical Engineering and Metallurgy
72: Yuhui TIAN, Chunfeng LI, Guang LI, Jia MA, Chen ZHANG, Shouxun ZHANG, Zhichao LIU, Xianming HOU, Zhuo LI, Guolong GUO
33: CN 31: 202511613482.2 32: 2025-11-06
54: BENEFICIATION METHOD FOR A URANIUM-IRON POLYMETALLIC PLACER
00: -
The present invention belongs to the technical field of beneficiation of uranium ore in the field of radioactive minerals, in particular to the field of mineral beneficiation of a uranium-iron polymetallic placer, and specifically relates to a beneficiation method for a uranium-iron polymetallic placer. The beneficiation method comprises steps of: wet screening through a roller screen, linear vibrating screening, spiral chute sorting, screening and grading of spiral chute concentrate, a centrifugal separation process, a shaking table concetration process, magnetic separation, etc. The present invention greatly reduces crushing and grinding costs and reagent costs, and improves sorting accuracy and sorting efficiency.

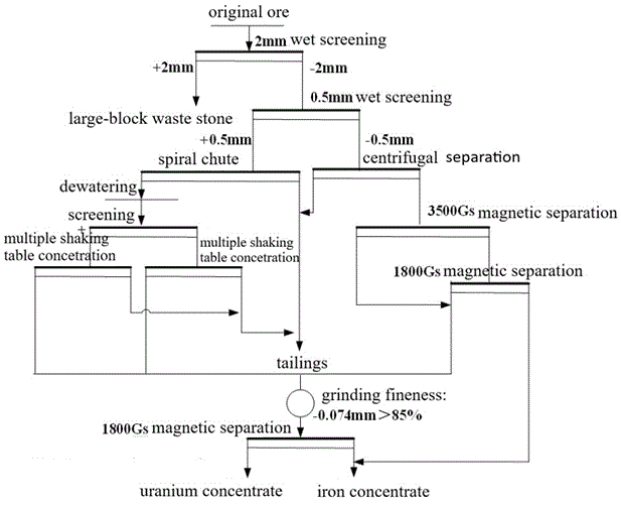

21: 2026/03534. 22: 2026/03/30. 43: 2026/10/30
51: A01C
71: Zhejiang Academy of Agricultural Sciences
72: CAI Kangfeng, LIU Xin, WANG Junmei, YUE Wenhao, LIU Lei
54: ENERGY-EFFICIENT DEVICE AND METHOD FOR WHEAT BREEDING AND SEED SELECTION
00: -
This invention relates to the field of breeding and seed selection, and particularly to an energy-efficient device and method for wheat breeding and seed selection; it comprises an outer casing, a feed inlet, a discharge pipeline, a circulating water tank, an inner casing and a filtering screen mesh. The invention is capable of addressing the following problems existing in the process of wheat breeding and seed selection in the prior art: the separated impurities cannot be automatically discharged and must be manually dismantled for cleaning; the screened wheat seeds cannot be automatically discharged, which reduces the working speed; after separation, the wheat seeds remain in a moist state and require manual spreading and drying, while the aforesaid device cannot dry the discharged wheat seeds, thereby increasing the workload. The invention not only enables the automatic discharge of separated impurities and unfilled wheat seeds, but also allows the automatic discharge of separated wheat, thereby improving working efficiency. The invention is capable of drying the screened wheat seeds, eliminating the need for subsequent manual spreading and drying.

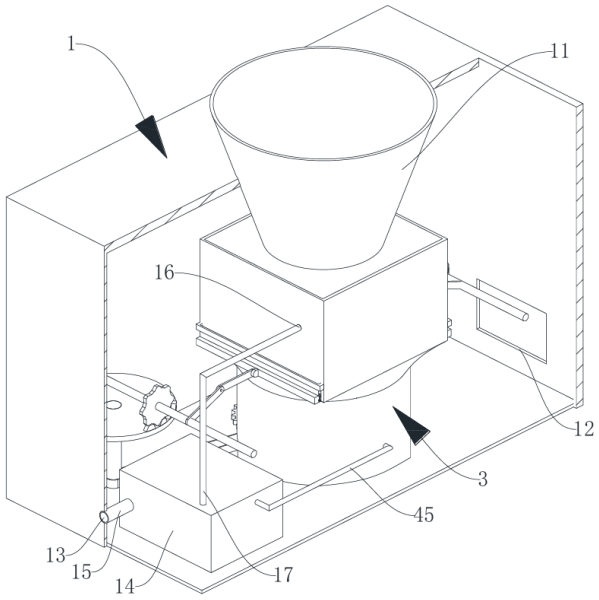

21: 2026/03562. 22: 2026/03/31. 43: 2026/10/30
51: G01V
71: QINGYANG RESOURCES EXPLORATION INSTITUTE OF GANSU COAL GEOLOGY BUREAU, BEIJING PETROSOUND GEOSERVICES COR.
72: FENG, Yalong, SUN, Xinchun, LI, Xiangyang, WANG, Long, XUE, Aimin, WANG, Zhengmao, SHI, Weibin
54: AUXILIARY SYSTEM FOR INTERPRETING SEISMIC FREQUENCY RESONANCE EXPLORATION DATA
00: -
Disclosed is an auxiliary system for interpreting seismic frequency resonance exploration data, including a data fusion access module to complete normalization, structuring and mutual-driven verification of collected data and geological data to form an integrated dataset. A multi-dimensional collaborative interpretation module achieves mutual verification and optimization of wave impedance characteristic extraction, strata-structure collaborative interpretation, coal-bearing strata precise analysis, and global comprehensive interpretation through multi-unit bidirectional linkage. An intelligent achievement iterative output module achieves visual output of achievements and relies on manual verification and newly added data to complete dynamic updates of interpretation results, while having a self-learning improvement mechanism at the same time. It solves poor data fusion, isolated interpretation links, static achievements and the like in the prior art, greatly improves the accuracy and efficiency of interpretation, adapts to the requirements of complex geological exploration areas, and provides a precise geophysical basis for coal resource exploration engineering layout.

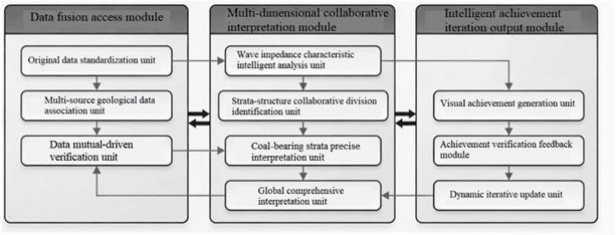

21: 2026/03563. 22: 2026/03/31. 43: 2026/11/02
51: C04B
71: Henan University of Urban Construction
72: LI, Jiangle, QU, Songzhao, ZHANG, Fengjian, LOU, Yafei, GUO, Pinggong, ZHAO, Yuxia, JIA, Haipeng, WU, Wenlong
54: LOW-SHRINKAGE CONCRETE AND PREPARATION METHOD THEREFOR
00: -
The present invention provides a low-shrinkage concrete and a preparation method therefor, and belongs to the technical field of concrete. In the present invention, fly ash is added to reduce a hydration temperature rise of a concrete, thereby preventing the concrete from developing shrinkage cracks; an expansion agent generates an "expansion force" in the concrete to counteract a shrinkage stress; zeolite powder is capable of storing water and slowly releasing the water at a later stage, thereby promoting slow hydration of the concrete; and fibers have a physical crack-inhibiting function to inhibit crack propagation.

21: 2026/03569. 22: 2026/03/31. 43: 2026/11/02
51: E21C
71: Shandong Gold Mining (Laizhou) Co., Ltd. Sanshandao Gold Mine
72: HOU Chenglu, YU Changxian, ZHANG Kaicheng, FU Qirui, ZHOU Yao, YANG Xiaohui, ZHOU Liteng, CHEN Jianjun
33: CN 31: 202510591565X 32: 2025-05-08
54: A MEDIUM-DEEP HOLE STOPING MINING METHOD FOR A GENTLY INCLINED ORE BODY
00: -
The present invention discloses a mining method for medium-deep hole stoping in a gently inclined ore

body. In the stope, a pseudo-inclined raise, a pseudo-inclined drilling raise, a cutting drift, and a return air drift are arranged. The pseudo-inclined drilling raise, the cutting drift, and the return air drift are used as a mining unit, and an upward mining method from bottom to top is adopted within the mining unit. A medium-deep hole drilling rig is used in the pseudo-inclined drilling raise to drill parallel medium-deep holes toward both sides, respectively. Blasting is carried out in stages, and ore is blasted laterally toward the inner side of the cutting drift. A load-haul-dump (LHD) machine is used to transport ore in the cutting drift. Two vertically spaced mining units can be arranged simultaneously within the stope. After each mining unit is completely extracted, the goaf is immediately backfilled. The mining method has the prominent advantages of simple process, high safety and efficiency, and low ore loss and dilution.

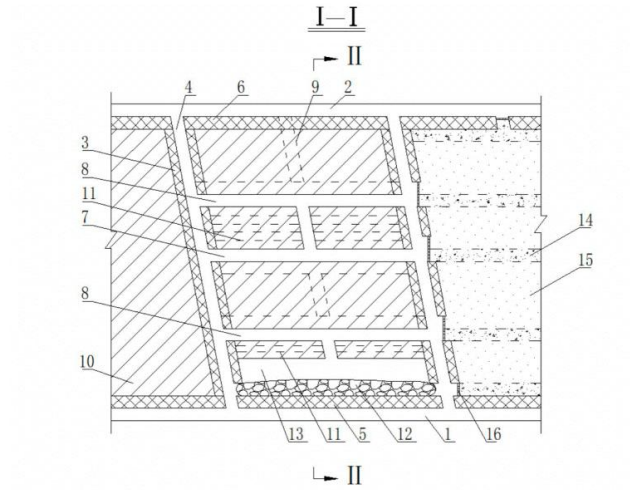

21: 2026/03570. 22: 2026/03/31. 43: 2026/11/02
51: E21C
71: Shandong Gold Mining (Laizhou) Co., Ltd. Sanshandao Gold Mine
72: HOU Chenglu, YU Changxian, WANG Hui, WU Zhenyu, LI Shangxiao, LENG Shuang, QU Yachen, WU Qingguo, ZHANG Junlei
33: CN 31: 2025105915645 32: 2025-05-08
54: A DEEP-HOLE MINING METHOD FOR INCLINED MEDIUM-THICK FRACTURED ORE BODIES
00: -
The present invention discloses a deep-hole mining method for inclined medium-thick fractured ore bodies, which belongs to the field of mining technology. The stope are arranged along the strike of the ore body, and in the horizontal direction along the ore body strike, the middle-section ore body is divided into several stope. In the vertical direction, the middle-section ore body is further divided into several segments. The overall mining method of the panels adopts a segmented stope downward mining approach, and the stope structure adopts a diamond-shaped panel structure. In the backfill ventilation connection drift and drilling drift of the stope, downward fan-shaped deep holes and upward fan-shaped deep holes are drilled for caving, and the ore is drawn from the lower-level draw drift of the segments. Using the mining method of the present invention overcomes the problem of low mining efficiency in fractured ore bodies, not only achieving high production capacity in the panels, but also exhibiting the outstanding advantages of simple process, high safety and efficiency, and low mining operational costs.

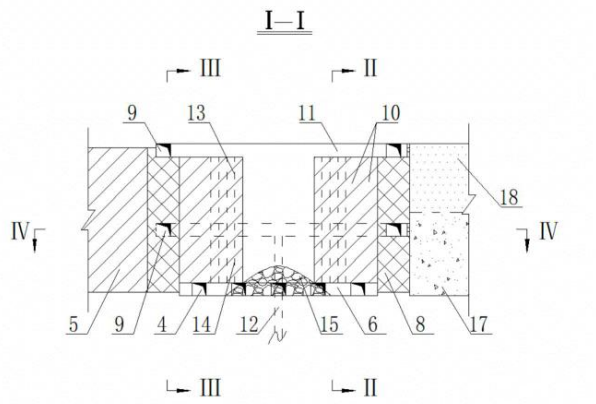

21: 2026/03571. 22: 2026/03/31. 43: 2026/11/02
51: E21F
71: Shandong Gold Mining (Laizhou) Co., Ltd. Sanshandao Gold Mine
72: HOU Chenglu, YU Changxian, WANG Ping, LIU Guodong, WANG Mingbin, LUAN Dongpeng, ZHAO Hongkai, GU Yunfeng
33: CN 31: 2025105990434 32: 2025-05-10
54: A DEEP INCLINED ROADWAY DEVELOPMENT VENTILATION METHOD
00: -
The present invention relates to a deep inclined roadway development ventilation method. When the inclined roadway is developed downward to a certain depth, an intake shaft connection drift is constructed at the footwall side of the roadway. After

constructing a reverse-section intake shaft from the upper part to connect with it, a sealed brick wall is erected in the connection drift, and a local fan is used to achieve forced ventilation. When the inclined roadway is further developed downward for a certain distance, the connection drift near the working face of the inclined roadway is temporarily modified into a ventilation chamber, a sealed brick wall is erected, and ice blocks are installed inside. The fresh airflow transmitted from above is cooled, and forced ventilation is carried out using a local fan. When the inclined roadway is developed to another certain depth, the construction of the intake shaft connection drift and the reverse-section intake shaft is repeated. After they are connected, all upper ventilation facilities and sealed brick wall are removed, a sealed brick wall is constructed in the connection drift, and forced ventilation is carried out using a local fan. The above ventilation method is repeated until the inclined roadway development is completed. By introducing fresh airflow, the present invention further improves the ventilation environment at the working face of deep inclined roadway development.

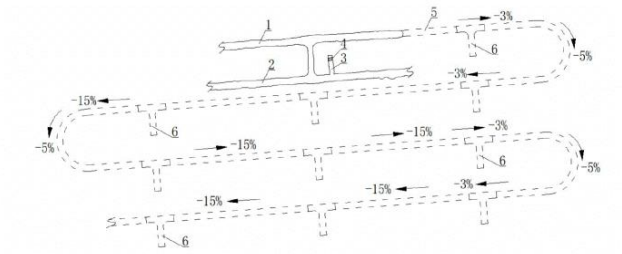

21: 2026/03575. 22: 2026/03/31. 43: 2026/10/12
51: B01D; H05K
71: LEONARDO UK LTD
72: CUSACK, John, COLES, Lyndon
33: GB 31: 2315638.3 32: 2023-10-12
54: AN EMC FLUID FILTER
00: -
An EMC fluid filter including: a filter medium having a filter structure, the filter structure permitting the flow of a fluid from a first side of the filter structure to a second side of the filter structure; a non-filter medium connected to the filter medium; and wherein the filter medium and the non-filter medium are formed together from one or more materials as a seamless unitary component.

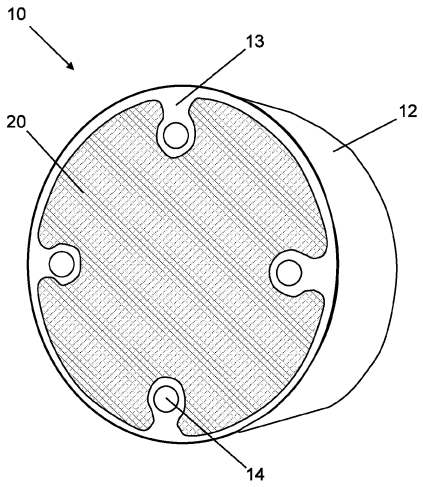

21: 2026/03576. 22: 2026/03/31. 43: 2026/11/02
51: A47L
71: Jiangsu Cancer Hospital
72: Zhenghuan SONG, Jing TAN, Weiyi WANG, Mengyue ZHU
33: CN 31: 2026100686146 32: 2026-01-19
54: ANESTHETIC DRUG SPRAYING DEVICE FOR DEPARTMENT OF ANESTHESIOLOGY
00: -
Provided in the present invention is an anesthetic drug spraying device for a department of anesthesiology, including: an anesthesia machine main body, an operating member, a moving assembly, a placement plate, a movable assembly, and a placement box, where the operating member is mounted on one side of the anesthesia machine main body; the moving assembly is disposed at a bottom of the anesthesia machine main body; the placement plate is connected to one side of a bracket; the movable assembly is disposed on a surface of the anesthesia machine main body; and the placement box is disposed on one side of the movable assembly. According to the anesthetic drug spraying device for the department of anesthesiology provided in the present invention, the moving assembly with the placement plate is disposed on the anesthesia machine main body with the operating member, which can facilitate medical staff to spread and place anesthetic drugs on a surface of the placement plate for easy viewing; and the movable assembly with the placement box is disposed on the surface of the anesthesia machine main body, making it convenient to store the operating member when not in use.

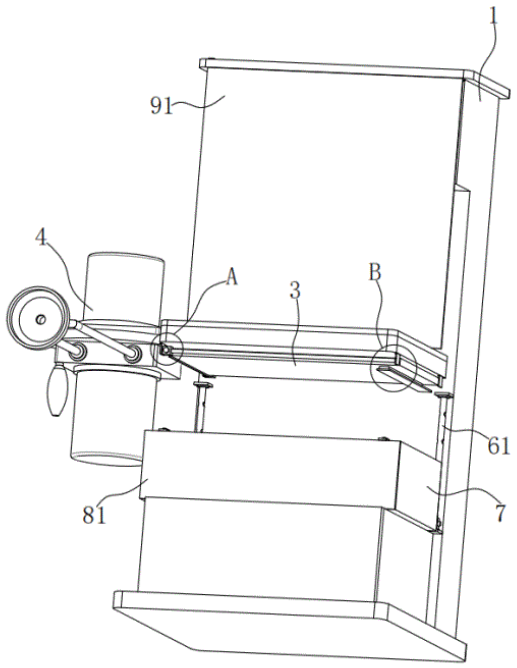

21: 2026/03577. 22: 2026/03/31. 43: 2026/11/02
51: A47L
71: Jiangsu Cancer Hospital
72: Jing TAN, Zhenghuan SONG, Qinyu BAO, Jing WANG, Jin WANG
33: CN 31: 2026100684422 32: 2026-01-19
54: VISUAL LARYNGEAL MASK WITH ANESTHETIC SPRAYING DEVICE
00: -
The present invention provides a visual laryngeal mask with an anesthetic spraying device. The visual laryngeal mask includes: a body; a main flow channel, fixedly mounted on one side of the body; an inflation assembly, disposed on the other side of the body; and an anesthetic delivery assembly, disposed on a side surface of the main flow channel. According to the visual laryngeal mask with the anesthetic spraying device provided in the present invention, through cooperation of structures such as the body, the anesthetic delivery assembly, a one-way assembly, a non-return assembly and a filtering assembly, when in use, a piston plate, a sealing sleeve and a spring of the non-return assembly cooperate with each other, and the channel is pressed open during delivery of an anesthetic; after the delivery is stopped, the spring resets to push the piston plate for sealing, thereby blocking a backflow path, preventing secretions from the throat from flowing back and contaminating an anesthetic apparatus, reducing the risk of cross infections, and solving problems that existing devices lack anti-backflow mechanisms and are prone to secretion backflow and contamination.

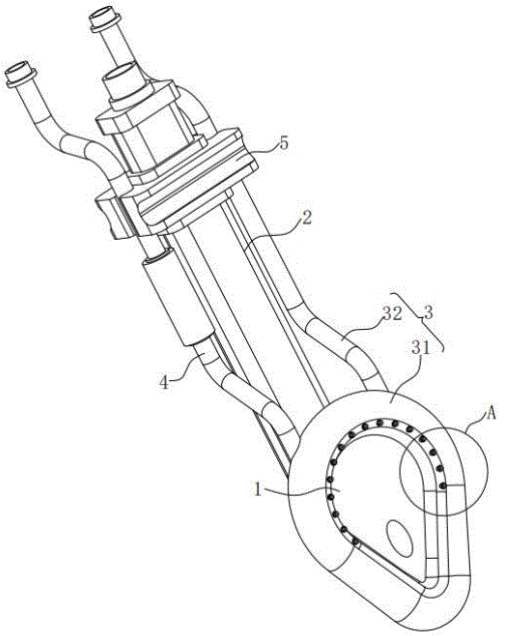

21: 2026/03599. 22: 2026/04/01. 43: 2026/11/02
51: A01H
71: INTERNATIONAL CENTRE FOR BAMBOO AND RATTAN
72: CHANG Yanting, HU Tao, DENG Yayun, ZHANG Wenbo, JIANG Zehui, YAN Baokun, MA Yanjun
54: POLYPLOID INDUCTION BREEDING METHOD FOR DENDROBIUM OFFICINALE KIMURA ET MIGO
00: -
The invention discloses a polyploid induction breeding method for Dendrobium officinale Kimura et Migo, belonging to the technical field of plant breeding. The method includes the steps of disinfecting Dendrobium officinale Kimura et Migo pods, sowing the peeled seeds on MS medium to cultivate until shoot tips grow, continuing cultivation for 2 days, dropping oryzalin solution at the growth points of the shoot tips, and then performing subculture. The polyploid induction breeding method for Dendrobium officinale Kimura et Migo of the invention is simple to operate, and has the advantages of high induction rate, low chimera rate and high survival rate; the method can accelerate the process of polyploid induction breeding of

Dendrobium officinale Kimura et Migo, and provide excellent reserve materials for the Dendrobium officinale Kimura et Migo industry.

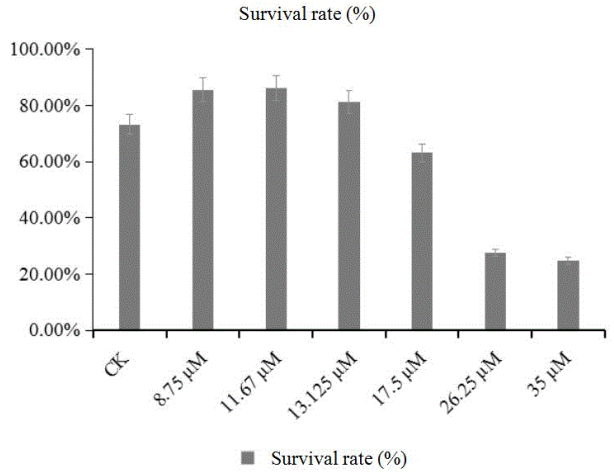

21: 2026/03600. 22: 2026/04/01. 43: 2026/11/02
51: G06F
71: NIDAL AL SAID
72: NIDAL AL SAID

54: A SYSTEM AND A METHOD FOR ADAPTIVE USER INTERACTION AND PERSONALIZATION IN SMART MEDIA PLATFORMS

00: -

The present disclosure relates to a hardware-integrated system and method for enabling adaptive user interaction and deterministic personalization within smart media platforms. The system combines multi-modal behavioral sensing, contextual state modeling, and a deterministic personalization control engine to dynamically modify content delivery and user interface configurations in real time. Multi-modal user interaction data comprising gestures, gaze signals, voice parameters, and interaction latency measurements are processed to generate behavioral vectors and a contextual state matrix. A deterministic interaction state index is derived through bounded-latency decision scheduling, ensuring predictable and efficient system operation. The system further comprises an edge processing unit for real-time local responsiveness, a cloud synchronization module for long-term cross-device learning, and a resource optimization module for efficient utilization of computational and network resources. Privacy-preserving mechanisms comprising on-device anonymization and secure data transmission are enforced throughout. The disclosed invention produces measurable technical effects distinguishable from excluded subject matter under Section 25 of the South African Patents Act 57 of 1978, and satisfies the requirements of novelty, inventive step, and industrial applicability prescribed thereunder.

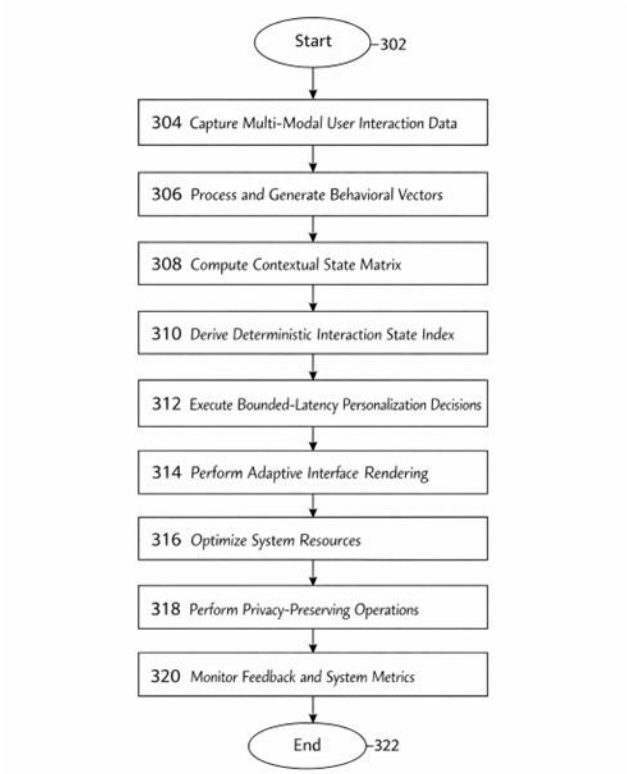

21: 2026/03601. 22: 2026/04/01. 43: 2026/11/02
51: G06F
71: CHONGQING HAOHUXI MEDICAL DEVICES CO., LTD.
72: Yang Xiangme, Tan Li, Guo Jinjin, Liao Yun, Luo Yan
33: CN 31: 2025104167948 32: 2025-04-03

54: METHOD FOR CONSTRUCTING MACHINE LEARNING MODEL FOR RECOMMENDING AIRWAY OPENING POSTURE ANGLE

00: -

Disclosed is a method for constructing a machine learning model for recommending an airway opening posture angle. The method includes collecting independent variable data affecting a glottis exposure effect when opening a patient airway, conducting an airway opening experiment, taking a posture angle corresponding to an optimal glottis exposure image as an optimal posture angle, performing single-factor analysis on the independent variables, and screening out statistically significant

independent variable data as candidate prediction variables. The method further includes preselecting machine learning models, training and verifying the models, evaluating using AUC values, and selecting a model with a highest AUC value as a prediction model for recommending the optimal airway opening posture angle. The obtained prediction model accurately recommends the optimal airway opening posture angle to expose a glottis of the patient for medical personnel, reducing or avoiding a risk of glottis exposure difficulty in bronchoscopy diagnosis and treatment.

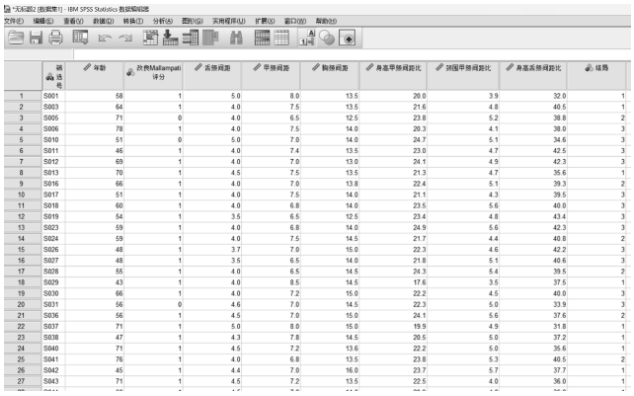

21: 2026/03602. 22: 2026/04/01. 43: 2026/11/02
51: A01C
71: Inner Mongolia Academy of Agricultural & Animal Husbandry Sciences
72: WULAN Tuya, YANG Chao, SUN Dele, BAO Junwei, WANG Baolin, LI Tiansheng, QILI Moge, SHAN Yumei, GUO Xin, GUO Jia, YAO Ruiying
54: CLOUD PLATFORM ARCHITECTURE-BASED DATA SERVICE SYSTEM FOR SOYBEAN REMOTE SENSING YIELD ESTIMATION
00: -
The invention provides a cloud platform architecture-based data service system for soybean remote sensing yield estimation, which comprises a cloud platform, and a data access module, a spatio-temporal preprocessing module, a soybean planting area identification module, a high-resolution total primary productivity inversion module, a dynamic harvest index determination module, a yield estimation module and a data service module deployed on the cloud platform. The system uniformly processes multi-temporal remote sensing data, meteorological data, plot boundary data and ground sample data, extracts soybean planting areas, inverts high-resolution total primary productivity, determines dynamic harvest index, and completes soybean yield estimation and spatial distribution output. The system improves the precision, adaptability and data service ability of soybean yield estimation by remote sensing.

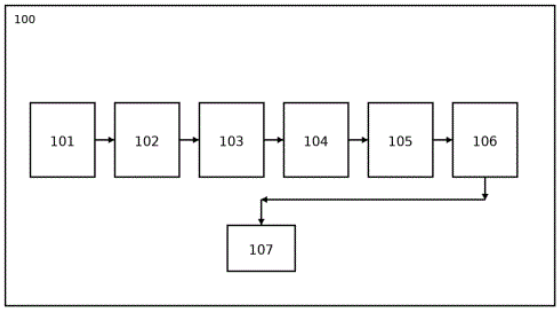

21: 2026/03603. 22: 2026/04/01. 43: 2026/11/02
51: G06F
71: NANTONG TUMOR HOSPITAL (NANTONG FIFTH PEOPLE'S HOSPITAL)
72: Xiaofang ZHANG, Haixia ZHU
33: CN 31: 2026103367994 32: 2026-03-19
54: INTELLIGENT MONITORING AND EARLY WARNING SYSTEM FOR NOSOCOMIAL INFECTION RISK
00: -
The invention discloses an intelligent monitoring and early warning system for nosocomial infection risk, relating to the technical field of risk prediction, comprising: a data acquisition module; a real-time dynamic module; and a verification module. The invention provides an intelligent and precise decision support tool for hospital infection prevention and control.

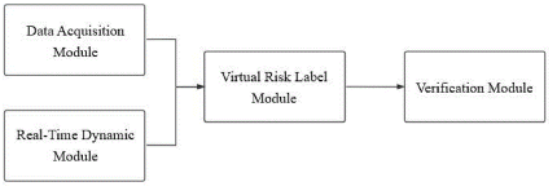

21: 2026/03605. 22: 2026/04/01. 43: 2026/11/02
51: G06Q
71: VISHWAKARMA INSTITUTE OF TECHNOLOGY
72: KHARATE, Namrata, CHAVHAN, Pranali, KOLHE, Harshal Dnyaneshwar, MORE, Rushikesh Vitthal, CHOUDHARY, Parth, MATHAMWAR, Mragaraj

54: AN INTEGRATED HIRING AND CANDIDATE EVALUATION SYSTEM WITH AI INTERVIEW AND MULTI-ROUND SCREENING CAPABILITIES

00: -

The invention relates to an ai powered, web based platform that integrates interview practice for job seekers with automated first round screening for employers. The system comprises a frontend for student and company users, a backend application server, a large language model (llm) for generating context aware interview questions and evaluating responses, speech interfaces for text to speech and speech to text, and a database storing users, jobs, applications, and interview transcripts. Candidates configure practice or screening interviews, engage in dynamic, back and forth conversations with the ai over text or speech, and receive immediate pass/fail outcomes, detailed feedback, and complete transcripts. Companies post jobs, define multi round automated interview flows, approve candidates for ai interviews, and review ai generated evaluations and transcripts for shortlisting. The unified ecosystem improves candidate preparedness, automates initial screening, reduces recruiter workload, and enables data driven, scalable hiring.

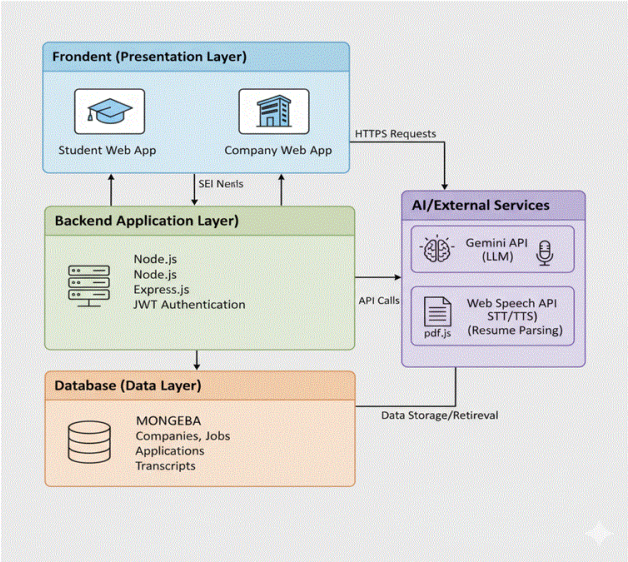

21: 2026/03606. 22: 2026/04/01. 43: 2026/11/02
51: G08G
71: VISHWAKARMA INSTITUTE OF TECHNOLOGY
72: RATHI, Vedant, RATHI, Krishna, RAUT, Rohan, RASAL, Runal, DESHMUKH, Minal Samir, RAUT, Ketan J., GAWANDE, Pravin G., CHITRE, Abhijit V.

54: AN INTEGRATED MINIATURE AUTOMATED PARKING SYSTEM WITH REAL-TIME SLOT DETECTION AND TIME-BASED BILLING

00: -

An integrated miniature automated vehicle parking system that combines real-time slot monitoring, automated gate control, and time-based billing into a unified embedded hardware framework. The system employs an Arduino Uno microcontroller coordinating infrared sensors for vehicle detection, servo motors for entry and exit gate actuation, an I²C LCD module for slot availability display, and an OLED module for billing information display. Parking charges are calculated using a configurable tariff model: Cost(t) = C_base + max(0, t - t_free) × R, providing flexible pricing based on base fee, free duration, and per-second rate. The system operates according to finite-state machine logic, achieving gate actuation response below 200 milliseconds and billing accuracy within ±1 second. The standalone design eliminates dependency on internet connectivity or cloud services while offering modularity for future integration with RFID authentication, IoT connectivity, and vision-based detection. The invention overcomes limitations of prior vision-based, IoT-based, and RFID-based solutions by providing a cost-effective, accurate, and scalable parking management solution suitable for educational, institutional, residential, and commercial applications.

21: 2026/03607. 22: 2026/04/01. 43: 2026/11/02
51: A01G
71: VISHWAKARMA INSTITUTE OF TECHNOLOGY
72: SAKTEPAR, Apurv Dhananjay, SALVI, Anushka Suresh, BHAKARE, Vedant Rajendra, PRAGANE, Nisha Yuvraj, SABLE, Nilesh Popat, PISE, Ganesh Shivaji

54: A MULTI-SENSOR, ADAPTIVE, FAULT-TOLERANT AUTOMATED IRRIGATION SYSTEM WITH INTELLIGENT FARMER INTERFACE

00: -

Disclosed herein is a solar-powered, multi-sensor, adaptive, fault-tolerant automated irrigation system with an intelligent farmer interface. The system employs an Arduino Uno microcontroller as the central controller, powered by a solar panel, solar charge controller, and rechargeable battery for continuous off-grid operation. Each irrigation zone is

equipped with a soil moisture sensor and a water-contact sensor, connected to a dedicated solenoid valve. A sensor-fusion algorithm correlates the outputs of both sensors: the soil moisture sensor assesses pre-irrigation soil state, while the water-contact sensor triggers immediate valve shutoff upon confirmed physical water arrival at root depth, preventing over-irrigation with a precision not achievable by single-sensor or timer-based systems. A water pump is manually activated by the farmer via a mobile or web application connected through a multi-protocol wireless module supporting Wi-Fi, Bluetooth, and RF communication with automatic protocol fallback. Upon pump activation, the microcontroller autonomously sequences through all zones, opening and closing valves based on real-time dual-sensor fusion, while the farmer retains manual pump control — a hybrid architecture that eliminates dry-running risk and improves operational safety. An integrated fault detection module continuously monitors sensor outputs, wiring continuity, and valve responses, logging faults, placing affected zones in isolated safe mode, and notifying the farmer in real time. The invention substantially reduces water wastage, enables precision irrigation in remote off-grid locations, and provides a scalable, cost-effective, and reliable automated water management solution for precision agriculture, greenhouses, plantations, and smart farming IoT deployments. Keywords: automated irrigation, multi-sensor fusion, soil moisture sensor, water-contact sensor, solenoid valve, Arduino Uno, fault detection, safe mode, solar-powered irrigation, off-grid agriculture, adaptive zone irrigation, IoT farming, precision agriculture, hybrid control.

21: 2026/03608. 22: 2026/04/01. 43: 2026/11/02
51: G06N
71: VISHWAKARMA INSTITUTE OF TECHNOLOGY
72: JOSHI, Pranav Nilesh, RAMANBAINWAD, Krishna Jalindarnath, RAUT, Rohan Ajay, CHAUDHURI, Aditya Ray, DESHPANDE, Pallavi Devendra, RATNAPARKHI, Archana S.
54: A HYBRID SENSOR FUSION AND EMBEDDED INFERENCE FOR REAL-TIME SITTING POSTURE CLASSIFICATION
00: -
The present invention provides a chair-integrated sitting posture monitoring and feedback system comprising a plurality of FSR (Force-Sensitive Resistor) pressure sensors mounted beneath the seat of a chair, which measure the pressure distribution generated by a seated user. An ESP32 microcontroller acquires and preprocesses sensor data, extracts feature representative of pressure distribution across left, right, front, and rear seating zones, and classifies the user's posture using a lightweight quantized neural network model stored in its internal memory. The classification outcome activates a green LED for correct posture or a red LED for incorrect posture, providing instantaneous visual feedback without requiring wearable devices, cameras, smartphones, or cloud connectivity. The system operates entirely on-device, ensuring low power consumption, real-time operation, and complete user privacy. The invention delivers a non-invasive, cost-effective, and ergonomically beneficial solution for continuous posture monitoring in workplaces, educational environments, healthcare settings, and homes.

21: 2026/03609. 22: 2026/04/01. 43: 2026/11/02
51: A01M
71: VISHWAKARMA INSTITUTE OF TECHNOLOGY
72: DASH, Rishika, PUJARI, Ishika, PATAYEET, Radha, DESHPANDE, Pallavi
54: AN INTELLIGENT PEST AND WILDLIFE MANAGEMENT SYSTEM WITH MULTI-SENSOR DETECTION AND ADAPTIVE DETERRENT RESPONSE
00: -
An intelligent digital scarecrow system for agricultural crop protection combining multi-sensor motion detection, machine learning-based image classification, servo-actuated camera positioning, and adaptive deterrent responses. The system employs dual PIR sensors detect animal motion and determine direction, a servo motor to orient an ESP32-CAM module toward detected motion, and an Edge Impulse-trained machine learning model to classify captured images as bird, animal, or ignore with confidence scoring. Based on classification and confidence (>95%), the system activates graded deterrents: water burst for high confidence (>98%), buzzer alert for moderate confidence (95-98%). Environmental sensors provide real-time temperature, humidity, and UV data displayed on

OLED. The system operates autonomously on Arduino microcontrollers without cloud dependency, achieving detection accuracy >95%, classification accuracy >50%, false-positive rate <10%, and total component cost under 1000. The confidence-based adaptive deterrent mechanism prevents animal habituation while minimizing false activations and power consumption (70-85% reduction vs. continuous operation). The invention provides cost-effective, intelligent, humane crop protection suitable for diverse agricultural applications including farms, orchards, aquaculture, and remote off-grid fields, while offering integrated environmental monitoring for agricultural decision-making.

21: 2026/03610. 22: 2026/04/01. 43: 2026/11/02
51: G06Q
71: VISHWAKARMA INSTITUTE OF TECHNOLOGY
72: GAIKWAD, Aryan Pravin, GAIKWAD, Yash Sanjay, GAT, Shravani Appasaheb, GAWANDE, Om Ravindra, MAHALLE, Parikshit, SHARMA, Nakul, SHELKE, Priya, DEDGOANKAR, Suruchi

54: AN INTELLIGENT CROP PREDICTION AND FARMING SUPPORT SYSTEM USING MACHINE LEARNING

00: -

Disclosed herein is an Intelligent Crop Prediction and Farming Support System using Machine Learning — a comprehensive, unified agricultural decision-support platform that simultaneously provides crop recommendation, fertilizer guidance, irrigation planning, and yield forecasting from a common set of soil and climate input parameters. The system integrates a Random Forest Classifier for crop prediction (achieving approximately 99% accuracy), a Decision Tree Classifier for fertilizer recommendation, a CNN/LSTM deep-learning model for yield forecasting, and a Penman–Monteith evapotranspiration-based irrigation guidance algorithm, all operating through a Flask-based RESTful backend inference layer. A responsive web dashboard presents all prediction outputs to the user in plain language through a single unified interface, eliminating the need for technical expertise. An optional IoT subsystem comprising an ESP32 microcontroller connected to NPK, DHT22, and soil moisture sensors enables automated, real-time data acquisition and dynamic advisory updates. A seed-bank locator module completes the platform by providing region-specific agricultural input supplier information. Unlike existing single-purpose agricultural tools, the invention provides a holistic, scalable, and affordable precision farming assistant suitable for residential farmers, agri-tech companies, government advisory programs, and large-scale agricultural enterprises.

21: 2026/03611. 22: 2026/04/01. 43: 2026/11/02
51: B29C
71: VISHWAKARMA INSTITUTE OF TECHNOLOGY
72: RAJURKAR, Sudhanwa Devendra, JOSHI, Pranav Nilesh, RAI, Abhyuday Udaylal, RAMANBAINWAD, Krishna Jalindarnath, DESHMUKH, Minal Samir, BANG, Arti Vasant, RAUT, Ketan Janraoji, GAWANDE, Pravin Ganapatrao

54: A SMART 3D PRINTING FILAMENT DEHYDRATOR AND STORAGE SYSTEM WITH AUTOMATED TEMPERATURE AND HUMIDITY CONTROL

00: -

Disclosed herein is a smart 3D printing filament dehydrator and storage system with automated temperature and humidity control. Hygroscopic thermoplastic filaments — including Nylon, PETG, ABS, and PLA — are prone to atmospheric moisture absorption, causing printing defects such as bubbling, stringing, under-extrusion, and reduced mechanical strength. Existing commercial dryers require manual transfer of dried filament to a separate airtight container for storage, re-exposing the material to ambient humidity. The present invention addresses this limitation by providing a single airtight enclosure that performs both active drying and long-term passive storage. An ESP32 WROOM microcontroller monitors internal and external environmental conditions through dual sensor arrays and applies PID-controlled heating, forced air circulation, spool rotation for uniform thermal exposure, and intelligent solenoid valve actuation to remove moisture efficiently. The system autonomously transitions between a Drying Mode, in which moisture-laden air is selectively vented based on an internal–external humidity differential, and a Storage Mode, in which an airtight seal and activated alumina desiccant maintain low-humidity conditions indefinitely. The invention reduces energy consumption, eliminates redundant drying cycles,

supports remote monitoring via Wi-Fi and home-assistant integration, and ensures consistent filament quality for additive manufacturing applications across hobbyist, educational, and industrial environments.

21: 2026/03612. 22: 2026/04/01. 43: 2026/11/02
51: A47L
71: VISHWAKARMA INSTITUTE OF TECHNOLOGY
72: KHAROLE, Chaitanya Yuvraj, KHANZODE, Kaivalya Ganesh, KODAPE, Samiksha Maniram, DESHPANDE, Pallavi Devendra
54: SMART FLOOR-CLEANING ROBOT WITH PREDICTIVE DIRT MAPPING
00: -
SteamRayX is a low-cost autonomous floor-cleaning robot utilizing ESP32 microcontroller and ultrasonic sensor array for intelligent navigation without requiring expensive LiDAR technology. The robot features a novel Simplified Localization and Mapping (S-LAM) algorithm specifically optimized for ultrasonic sensor data, enabling construction of occupancy grid maps and structured area coverage comparable to premium commercial alternatives at 60-70% lower cost. Navigation employs a four-sensor HC-SR04 ultrasonic array providing 360-degree environmental awareness, integrated with Proportional-Derivative (PD) control for smooth boundary following and collision-free obstacle avoidance. The differential drive mobility system executes planned paths while maintaining safe distance from walls and furniture through continuous feedback correction. Cleaning operations are performed through dual mechanisms: a BLDC vacuum motor providing powerful suction for dust and debris collection, and an SG90 servo-controlled rotating side brush sweeping particles from edges and corners into the vacuum path. Multi-threaded task management on the ESP32 enables concurrent execution of navigation, mapping, and cleaning functions without timing conflicts. The robot is powered by a 2S Li-ion battery with integrated Battery Management System (BMS) providing approximately 40 minutes of continuous operation with protection against overcharge, over-discharge, and short-circuit conditions. Wi-Fi connectivity enables remote control and monitoring through a mobile application interface, allowing users to initiate cleaning, monitor progress, and receive battery status notifications. Experimental testing on various indoor floor surfaces including tiles, wood laminates, and low-pile carpets demonstrates stable navigation performance, reliable obstacle avoidance, 95-98% area coverage, and effective cleaning results. The modular design supports future enhancement with additional sensors, advanced dirt detection, and route memory capabilities. With target manufacturing cost below 12,000, the invention makes reliable autonomous cleaning technology accessible to mass-market consumers, democratizing household robotics.

21: 2026/03613. 22: 2026/04/01. 43: 2026/11/02
51: G01M
71: VISHWAKARMA INSTITUTE OF TECHNOLOGY
72: KOTASTHANE, Sai Samir, KOTKAR, Aniket Sampat, KOMALWAR, Tejas Ashok, DESHPANDE, Pallavi
54: A SMART WATER LEAKAGE DETECTION SYSTEM
00: -
The Smart Water Leakage Detection System is an IoT-based solution designed to monitor household and distribution pipelines in real time, using dual YF-S201 flow sensors and pressure transducers connected to a NodeMCU ESP8266 microcontroller with integrated Wi-Fi. By comparing inlet and outlet flow readings and applying physics-based pressure equations and friction loss analysis, the system rapidly identifies leaks, blockages, or overflow conditions before they cause structural damage or significant water wastage. Upon detection of an anomaly, users receive simultaneous multi-channel alerts through an audible buzzer, LED status indicators, LCD display messages, and mobile push notifications. The system further enables remote or automatic water supply interruption via solenoid valve actuation, transitioning the device from a passive monitoring tool to an active prevention system. All sensor data and event records are transmitted to a cloud platform for real-time remote access, longitudinal usage analysis, and predictive maintenance scheduling. Designed around low-cost, widely available components, the system is scalable from individual residential installations to commercial

buildings, industrial facilities, and municipal water distribution networks.

21: 2026/03614. 22: 2026/04/01. 43: 2026/11/02
51: F24B
71: VISHWAKARMA INSTITUTE OF TECHNOLOGY
72: CHAUDHURI, Aditya A. Ray, RAYMANE, Jay G., DINGREJA, Rishi V., WABLE, Rohan R., DESHMUKH, Minal Samir, RAUT, Ketan Janraoji, GAWANDE, Pravin Ganapatrao

54: A GAS STOVE SYSTEM FOR AUTOMATED KITCHEN SAFETY

00: -

Disclosed herein is a Smart Gas Stove System for Automated Kitchen Safety — an integrated, microcontroller-based device that provides continuous real-time monitoring of gas concentration and stove flame status to detect and respond to kitchen gas hazards autonomously. The system comprises an MQ6 semiconductor gas sensor for detecting LPG and natural gas leaks, dual-channel infrared flame sensors positioned on opposing sides of the cooking area for redundant flame presence monitoring, an ESP32 WROOM microcontroller as the central processing unit, a Node MCU secondary module for relay control and Wi-Fi connectivity, a 16×2 LCD with I²C interface for real-time status display, a buzzer and LED indicator for dual audio-visual alerting, a relay-controlled gas solenoid valve, and a servo-motor-actuated mechanical gas shut-off mechanism. The ESP32 samples all sensors at 500 ms intervals and applies a multi-condition safety algorithm that correlates gas concentration against flame status to identify hazardous conditions — including gas leaks during ignition failure and flame extinction with continued gas flow — while minimizing false alarms during normal cooking operations. Upon hazard confirmation, the system simultaneously activates audio-visual alerts and both electrical and mechanical gas shut-off mechanisms. Optional Wi-Fi connectivity enables remote monitoring via home-assistant platforms. The invention overcomes the limitations of prior single-sensor systems and manual monitoring approaches by providing real-time, automated, multi-sensor-correlated hazard detection and response, suitable for residential, commercial, and industrial kitchen applications

---

21: 2026/03645. 22: 2026/04/02. 43: 2026/11/03
51: G06T
71: Qinghai Geological Survey
72: Hua LI, Hongxi BAI, Haiyan SHI, Bo KANG, Deqing MA, Changhai LUO, Jie LI, Chao AN, Yun CHAI, Youning WEI, Xiaoliang YU, Juan SHEN, Weimin MA

54: THREE-DIMENSIONAL GEOLOGICAL MODELING METHOD FOR CONCEALED GOLD DEPOSITS BASED ON INTEGRATED AIRBORNE, SURFACE, AND BOREHOLE EXPLORATION DATA

00: -

The present invention relates to the technical field of geophysical exploration and three-dimensional geological modeling, and discloses a three-dimensional geological modeling method for concealed gold deposits based on integrated airborne, surface, and borehole exploration data, comprising acquiring multi-source exploration data and mapping it to a three-dimensional orthogonal grid; calculating the macroscopic structural trend surface based on the prior structure point cloud and constructing a static anisotropic tearing tensor matrix; assembling a multi-physics coupled joint inversion objective function based on the multi-source exploration data and the matrix; performing nonlinear iterative solution of the objective function, and dynamically updating the topological distribution of the anisotropic tearing tensor matrix during the iteration according to the cross-gradient collinearity and macroscopic structural trend surface; finally obtaining the three-dimensional property data volume after convergence, and extracting the three-dimensional geological entity model of the concealed gold deposit according to the prior petrophysical logical discriminant. The present invention can effectively preserve the boundary of abrupt changes in physical properties, avoid blurred boundaries of geological entities, and improve the positioning accuracy and precision of deep concealed ore bodies.

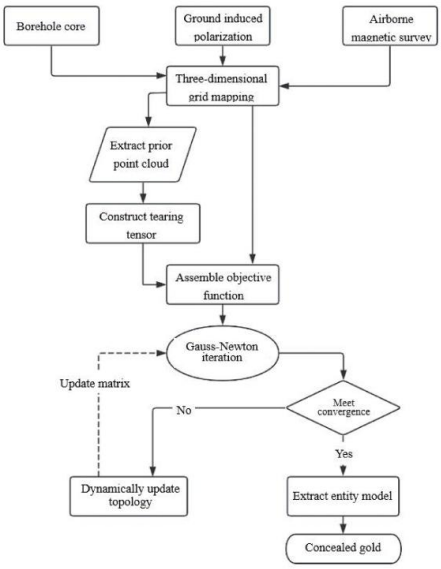

21: 2026/03646. 22: 2026/04/02. 43: 2026/11/03
51: C25B
71: KUNMING UNIVERSITY OF SCIENCE AND TECHNOLOGY
72: ZHANG Yanjia, LI Linhui, ZHOU Huangkai, XIAO Jie, ZENG Xiaoyuan

54: RUTHENIUM-RUTHENIUM DIOXIDE HETEROJUNCTION CATALYST AND APPLICATION IN HYDROGEN PRODUCTION VIA WATER ELECTROLYSIS

00: -

The present invention discloses the preparation and application of a heterojunction catalyst for water electrolysis hydrogen production, which relates to the technical field of water electrolysis hydrogen production. The heterojunction catalyst for water electrolysis hydrogen production in the present invention is a Ruthenium - Ruthenium dioxide heterojunction catalyst supported on carbon quantum dots, which takes carbon quantum dots as the carrier and has a heterojunction structure formed by Ruthenium and Ruthenium dioxide. This catalyst exhibits excellent hydrogen evolution reaction (HER) performance. The preparation method of the catalyst for water electrolysis hydrogen production provided by the present invention is characterized by simple operation, good stability and high repeatability, and is of great significance for promoting the development of catalysts for water electrolysis hydrogen production.

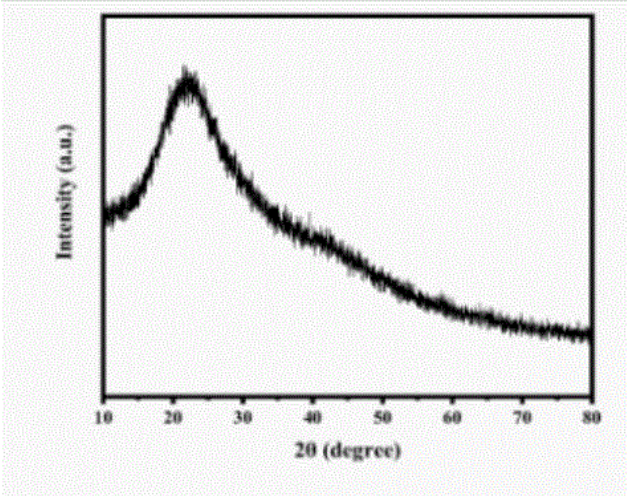

21: 2026/03648. 22: 2026/04/02. 43: 2026/11/03
51: H02B
71: Yaxu Intelligent Technology Co., Ltd.
72: GAO, Liping, HE, Jiale, DUAN, Haifeng
33: CN 31: 202620314790.9 32: 2026-03-14

54: SAFETY-TYPE DISCONNECTING ISOLATION CABINET

00: -

The present application relates to the technical field of disconnecting isolation cabinets, and discloses a safety-type isolation cabinet, including a cabinet body. The cabinet body is formed with a placement recess, a grounding operating rod is rotatably connected in the placement recess, a blocking structure is provided in the placement recess, a driving shaft of the blocking structure is provided with a blocking member, a switching structure is provided in the placement recess to switch between energization and de-energization of the blocking structure, the blocking structure drives the blocking member to move such that the blocking member can be positioned on the movement path of a tool inserted into the grounding operating rod. When the circuits in other electrical cabinets are energized, the blocking member blocks the grounding operating rod, and when the circuits in other electrical cabinets are de-energized, the blocking member disengages from the movement path of the tool inserted into the grounding operating rod. In the present application, when the circuits in other electrical cabinets are energized, the switching structure drives the blocking structure to be de-energized. Since the blocking member is disposed on the driving shaft of the blocking structure, the blocking member blocks the grounding operating rod, making the operator

unable to rotate the grounding operating rod when the circuits in other electrical cabinets are energized.

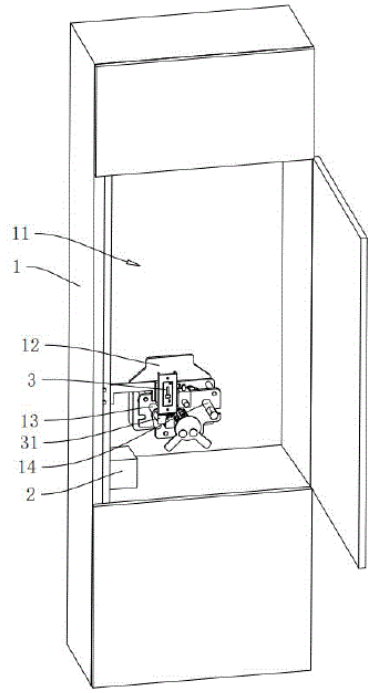

21: 2026/03650. 22: 2026/04/02. 43: 2026/11/03
51: C12Q
71: Central People's Hospital of Zhanjiang
72: ZENG Yan, ZHENG Jun, LIU Yueqi, LEI Ni, GE Chang, XIE Shuping, ZHOU Lyu, CHEN Minggui
54: PRIMER COMBINATION, KIT AND APPLICATION THEREOF FOR RAPID DETECTION OF KSHV
00: -
The invention discloses a primer combination, its kit and its application for the rapid detection of KSHV, belonging to the field of medical biotechnology. In which, the primer combination is used for detecting miRNA derived from peripheral blood. The invention also discloses the use of a reagent for quantitatively detecting the expression level of the miRNA in the preparation of a kit for detecting KSHV latent infection, and a kit for detecting KSHV latent infection, which includes a reagent for quantitatively detecting the expression level of the miRNA. By using the invention, detection may be performed by using the peripheral blood of a subject, which is non-invasive, convenient and fast, and has important clinical application value.

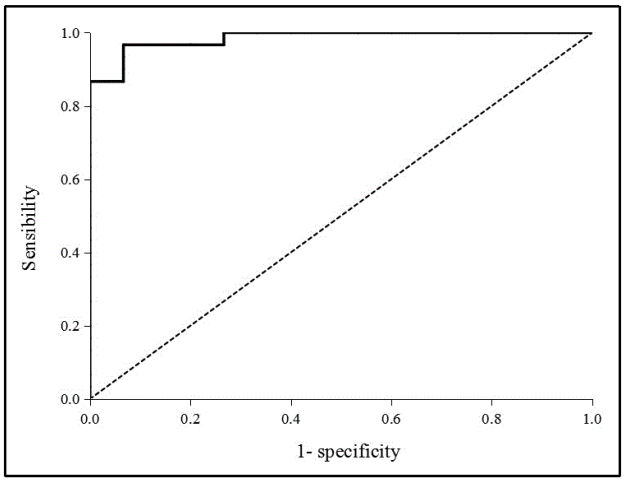

21: 2026/03653. 22: 2026/04/02. 43: 2026/11/03
51: B01D
71: Chengdu Vocational & Technical College of Industry
72: Shaojie Fan, Zhengbiao Jing, Lei Zhang, Qian Yu, Yiping Ran
54: DISCHARGING DEVICE FOR PREVENTING ELECTROSTATIC ADSORPTION OF FINE PARTICLES
00: -
The present invention relates to the technical field of discharging devices, and provides a discharging device for preventing electrostatic adsorption of fine particles, including a bearing frame. A transfer box is mounted and fixed on the inner side of the bearing frame and at an upper end of storage equipment; a discharge hood is connected between an upper end of the transfer box and processing equipment; a discharging cylinder is fixed at a bottom end of the transfer box; a first sealing plate and a second sealing plate are slidably connected to two ends of an inner side of the transfer box respectively; and an upper scraping ring and a lower scraping ring are slidably connected to a top end and a bottom end of an inner side of the discharging cylinder respectively. In the present invention, the upper scraping ring and the lower scraping ring are driven to reciprocate up and down on an inner wall of the discharging cylinder to comprehensively scrape and clean the fine particles adsorbed on the inner wall of the discharging cylinder. Meanwhile, the second sealing plate is driven to reciprocate and slide on an outer side of the transfer box, so that the first sealing plate moves synchronously with the second sealing plate on the inner side of the transfer box, effectively

removing the fine particles adsorbed on an inner wall of the transfer box, and realizing active prevention and timely cleaning of electrostatic adsorption.

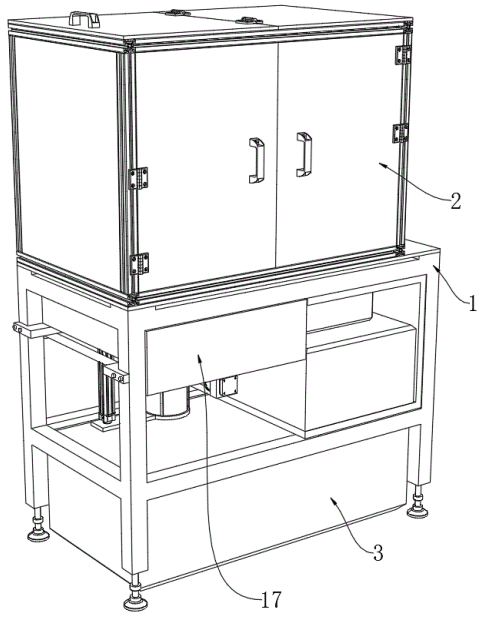

21: 2026/03654. 22: 2026/04/02. 43: 2026/11/03
51: B65G
71: Chengdu Vocational & Technical College of Industry
72: Zhengbiao Jing, Shaojie Fan, Jianchun Qiao, Baoyu Xiong

54: FLEXIBLE MATERIAL DOCKING DEVICE FOR INTELLIGENT PRODUCTION LINES

00: -

The present invention relates to the technical field of material docking, and provides a flexible material docking device for intelligent production lines, including a scissor lift base. A support base frame is fixed at an upper end of the scissor lift base close to an upstream conveyor, a first belt docking table is mounted and fixed at an upper end of the support base frame, a second belt docking table is mounted and fixed at an upper end of a load-bearing base column, a drive assembly is arranged at an upper end of the scissor lift base and outside a hollow support cylinder, a transition lapping plate is rotatably connected to an outer side of a first support shaft, and a transition floating plate is arranged at one end of the second belt docking table away from the first belt docking table. In the present invention, the drive assembly drives the second belt docking table to adjust a conveying direction, the scissor lift base adjusts the height of the entire device, the transition lapping plate is controlled to lift up to facilitate lapping under upstream conveyors of different height specifications, and the transition floating plate enables smooth and flexible transition of materials to the downstream conveyor.

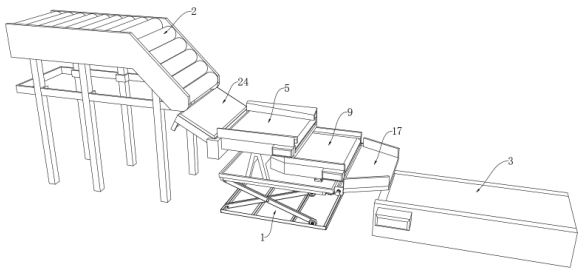

21: 2026/03688. 22: 2026/04/07. 43: 2026/11/03
51: G01N
71: Beijing Research Institute of Chemical Engineering and Metallurgy
72: Jia MA, Chunfeng LI, Guang LI, Chen ZHANG, Yuhui TIAN, Zhichao LIU, Shouxun ZHANG, Xianming HOU
33: CN 31: 202610161509.7 32: 2026-02-04

54: RESEARCH METHOD FOR AN INFLUENCE OF RADIOACTIVE ELEMENTS ON MINERAL CRYSTAL STRUCTURES

00: -

The present invention belongs to an interdisciplinary technical field of mineralogy, radiation chemistry, and material microstructure analysis, and specifically relates to a research method for an influence of radioactive elements on mineral crystal structures. The method comprises: sample preparation and target area screening; characterization of carrier mineral morphology and composition; overall structural analysis; precise positioning of a micro-region and preparation of a transmission electron microscope sample; direct observation and association of atomic scale microstructure damage; and data integration and mechanism research. The technical solution of the present invention realizes an "in-situ-association" analysis in a true sense, establishes a complete evidence chain from a macroscopic scale to an atomic scale, reveals microscopic non-uniformity that is difficult to find by traditional methods, and has a broad application value.

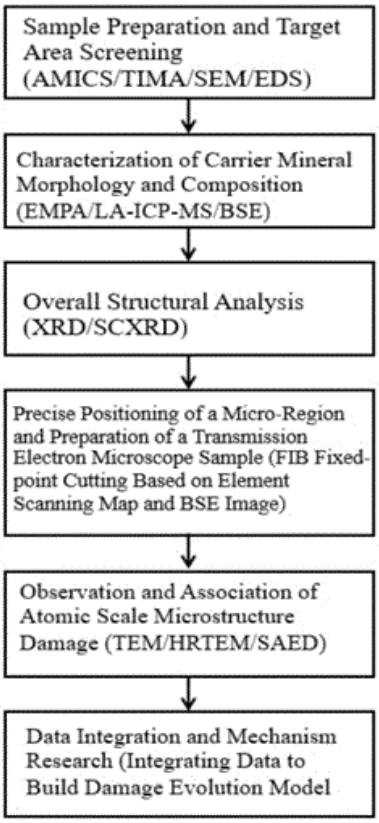

21: 2026/03689. 22: 2026/04/07. 43: 2026/11/03
51: G06Q
71: VISHWAKARMA INSTITUTE OF TECHNOLOGY
72: KURHADE, Atharva Yuvraj, SANGRAME, Mukesh Tikaram, MUDPE, Sanket Pravin, JAJULWAR, Satyam Rajesh, DESHPANDE, Pallavi
54: A SMART MULTI-SENSOR IOT SYSTEM FOR FOREST PROTECTION AND DEFORESTATION PREVENTION
00: -
An autonomous multi-sensor IoT system for real-time forest threat detection and alert generation is disclosed. The system employs an ESP32 microcontroller interfaced with specialized sensor nodes for detecting illegal tree cutting (vibration and acoustic sensors), unauthorized intrusion (laser-LDR perimeter breach detection), ground movement (pressure and acoustic sensors), and early-stage fire events (smoke and temperature sensors). Multi-sensor validation logic minimizes false alarms by requiring simultaneous threshold exceedance of complementary sensors. Upon threat confirmation, a NEO-6M GPS module provides location coordinates, and the system transmits wireless alerts containing event type, timestamp, and GPS data to forest authorities via Telegram Bot API over Wi-Fi. Solar power subsystem comprising photovoltaic panel, TP4056 charging module, and lithium-ion batteries enables continuous autonomous operation in remote off-grid locations. The scalable, modular architecture addresses critical gaps in traditional forest surveillance, enabling rapid and informed response to environmental threats while operating maintenance-free in challenging forest environments.

21: 2026/03690. 22: 2026/04/07. 43: 2026/11/03
51: G01C
71: VISHWAKARMA INSTITUTE OF TECHNOLOGY
72: KOGANUR, Soujanya Gangadhar, KOHINKAR, Apurva Digambar, KONDE, Ninad Nitin, DESHPANDE, Pallavi Devendra, RATNAPARAKHI, Archana, GHULE, Gauri
54: A BLIND TURN INDICATOR AND WARNING SYSTEM FOR HILLY AREAS
00: -
A bidirectional blind turn indicator and warning system prevents accidents at blind curves and low-visibility road segments in hilly areas. The system employs infrared (IR) sensors positioned on opposite sides of a blind curve to detect approaching vehicles. Detection signals are transmitted to a microcontroller unit which activates LED visual indicators and buzzer audible alerts on the opposite side of the curve, providing real-time warnings to drivers and preventing head-on collisions. The system features autonomous operation, minimal power consumption, optional wireless communication capability for extended range, and solar power compatibility for deployment in remote areas. The system demonstrates cost-effectiveness, rapid response time (0.5-1.0 seconds), and reliable performance across varied environmental conditions including fog, rain, and nighttime operation. The technology addresses critical safety needs in accident-prone mountainous regions where traditional passive warning systems prove inadequate, offering a practical solution for large-scale road safety enhancement.

21: 2026/03693. 22: 2026/04/07. 43: 2026/11/03
51: C01B

71: Research Institute of Tropical Forestry, Chinese Academy of Forestry, Southwest Forestry University
72: LU Zhaohua, WANG Xiaoli, LI Guangyou, KONG Lingrong, YANG Deming, XU Kaimeng, WAN Hui, CAO Zilin, LU Zhuangyue, HE Yuqiong, HU Zhikang
33: CN 31: 2025106583736 32: 2025-05-21

54: A METHOD FOR PREPARING BIOCHAR BASED ON EUCALYPTUS AND ITS APPLICATION

00: -

The present invention relates to the field of biochar preparation technology, specifically to a method for preparing biochar based on eucalyptus trees and its application. The present invention uses a response surface experimental design and high-temperature cracking method to prepare biochar. The pore structure dominated by micropores cooperates with surface functional groups, so that the final prepared biochar can balance adsorption capacity and selectivity. The raw material used in the present invention is mainly eucalyptus waste, which can effectively improve the utilization rate of eucalyptus waste. At the same time, the produced biochar has outstanding application performance in multiple fields, and can be used for soil improvement, pollution control, and catalytic materials, reducing fertilizer dependence, reducing fuel oil sulfur emissions, adsorbing and catalyzing carbon dioxide, and has broad application prospects.



21: 2026/03694. 22: 2026/04/07. 43: 2026/11/03
51: A61K

71: Northwest A&F University, Shaanxi Huani Biotechnology Co., Ltd., Zhejiang Zhongmengchang Health Technology Co., Ltd.
72: GE Wupeng, LIU Mengjia, FU Shangchen, DING Yi, LI Zhonghu, HUO Zhenquan, REN Yanxin, CAO Zhi

54: APPLICATION OF GIANT SALAMANDER SMALL MOLECULAR PEPTIDE IN MANUFACTURING PRODUCT FOR TREATING ALCOHOLIC LIVER INJURY

00: -

The present invention discloses an application of a giant salamander small molecular peptide in manufacturing a product for treating alcoholic liver injury, belonging to the technical field of biologically active peptides. The present invention uses giant salamander as a raw material, hydrolyzes the giant salamander with a combination of papain and bromelain, and obtains peptides with a molecular weight less than 1kDa after ultrafiltration, which are the giant salamander small molecular peptide of the present invention. Experimental verification shows that the giant salamander small molecular peptide can effectively improve alcoholic liver injury, has a significant effect on improving or alleviating alcoholic liver injury, and provides a new effective means for treating alcoholic liver injury. The giant salamander small molecular peptide of the present invention is derived from artificially farmed second-generation giant salamanders, has high safety and minimal side effects, can be used in the pharmaceutical field, and possesses good social and economic benefits. The preparation method of the present invention is simple, low-cost, suitable for large-scale industrial production, and has broad market application prospects.

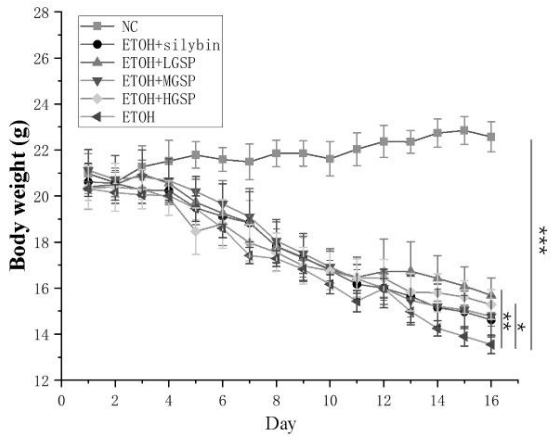

21: 2026/03697. 22: 2026/04/07. 43: 2026/11/03
51: C04B
71: Yantai University
72: Zuowei Liu, Yike Zhang, Jingyi Liang, Chen Xu, Zile Xiong, Taiyu Chen

54: PERVIOUS RECYCLED AGGREGATE CONCRETE CONTAINING COMBINED ADDITIONS OF RECYCLED CARBON FIBERS AND RUBBER PARTICLES AND A METHOD FOR PREPARING THE SAME

00: -

The present invention discloses Pervious Recycled Aggregate Concrete Containing Combined Additions of Recycled Carbon Fibers and Rubber Particles and a Method for Preparing the Same. In the present invention, through the optimized design of a multi-component cementitious material system, the slurry structure is improved, the performance of the interfacial transition zone is enhanced, and the compactness of the matrix is increased, thereby effectively improving the strength and durability of the concrete. The incorporation of recycled carbon fibers can utilize their high modulus characteristics to inhibit the initiation and propagation of cracks in the matrix, further enhancing the mechanical properties of the concrete. The addition of recycled rubber particles can improve the toughness and impact resistance of the concrete, while optimizing the permeable pore structure and ensuring the permeability function of the concrete. The pre-treatment of recycled coarse aggregates in a saturated surface dry condition provides a stable basis for subsequent mixing, ensures the uniform distribution of each component, and enables the fibers and rubber particles to effectively exert their modification effects; the static pressure forming process ensures the uniformity of the internal structure of the concrete and reduces forming defects.

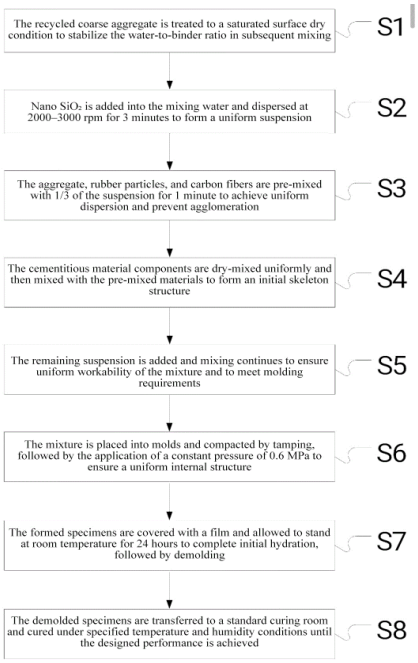

21: 2026/03698. 22: 2026/04/07. 43: 2026/11/03
51: A61G
71: Jinan Maternity and Child Care Hospital
72: Huang Luxin

54: AN INTELLIGENT CONTROL SYSTEM AND METHOD FOR GYNECOLOGICAL EXAMINATION BED BASED ON MULTI-SENSOR FUSION

00: -

The present invention discloses an intelligent control system and method for gynecological examination beds based on multi-sensor fusion, belonging to the field of intelligent control technology for medical equipment.The system includes a multi-sensor acquisition module, a data fusion processing module, an intelligent decision-making and control module, an interaction module, a storage module, and a communication module;The data fusion processing module adopts a dynamic weight fusion strategy to denoise, align, and fuse features of multi-source sensor data, solving the problems of insufficient reliability and poor scene adaptability of single sensor data;The intelligent decision-making and regulation module is based on fused data, preset examination scenario parameters, and doctor operating habits, to achieve adaptive intelligent regulation of examination bed position, support strength, and environmental parameters;The

interaction module supports manual intervention by doctors and feedback input from patients, forming a closed-loop regulation.

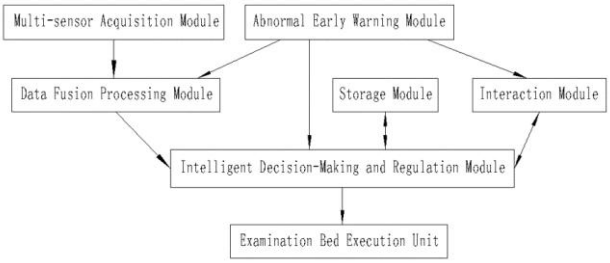

21: 2026/03699. 22: 2026/04/07. 43: 2026/11/03
51: B03D
71: Beijing Research Institute of Chemical Engineering and Metallurgy
72: Jia MA, Chen ZHANG, Yuhui TIAN, Guang LI, Chunfeng LI, Zhichao LIU, Shouxun ZHANG
33: CN 31: 202511163385.8 32: 2025-08-19

54: METHOD AND SYSTEM FOR DETERMINING A FLOTATION COLLECTOR FOR URANIUM-CONTAINING ZIRCON

00: -

The present invention discloses a method and a system for determining a uranium-containing zircon flotation collector. In the method, a unit cell crystal of zircon is modeled and optimized; a supercell model is constructed based on an optimized unit cell model, and uranium doping configuration treatment is performed on the supercell model to obtain a uranium-containing zircon model. Through selecting a flotation collector to be determined and performing adsorption simulation on a surface of the uranium-containing zircon model, an interatomic distance between an O atom in the flotation collector to be determined and a surface U atom of the uranium-containing zircon model is obtained; whether the interatomic distance is within a range of a U-O bond in the uranium-containing zircon model is judged to further determine whether chemical bond adsorption occurs, and finally whether the flotation collector to be determined can be used as the uranium-containing zircon flotation collector is determined. The method has a simple process and can accurately determine whether the flotation collector to be determined can be used as the uranium-containing zircon flotation collector.

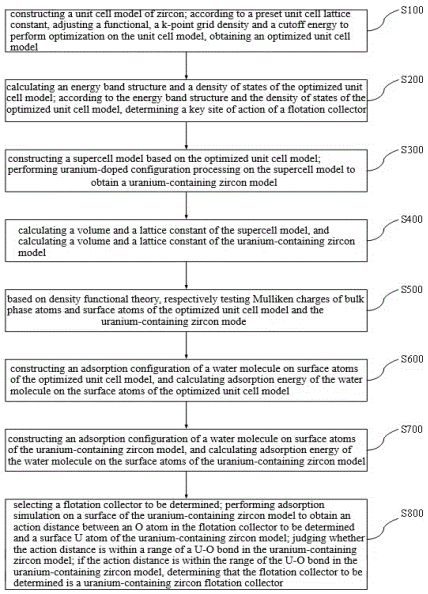

21: 2026/03701. 22: 2026/04/07. 43: 2026/11/03
51: D05B
71: Donghua University
72: SONG Dan, TONG Ling, ZHAI Jia, ZHANG Yuelan

54: A GARMENT SEWING MACHINE PROVIDED WITH CALIBRATION FUNCTION

00: -

The present invention provides a garment sewing machine provided with calibration function, relating to the technical field of sewing machines. The calibration device comprises a machine body and a calibration assembly, wherein the calibration assembly is arranged on the machine body. The calibration assembly comprises a base bottom plate, a lifting platform, a feedback module and a calibration ruler. An opening is formed in the tabletop of the machine body, the base bottom plate is fixed to its lower end, and the lifting platform is slidably arranged in the opening and parallel above the base bottom plate. According to the present invention, the lifting cylinder drives the lifting platform to drive the calibration ruler to realize automatic height adjustment, which can quickly match the positioning reference height requirements of fabrics with different thicknesses, replace the operation of manual shutdown and repeated knob adjustment, shortening adjustment time and ensure production continuity.

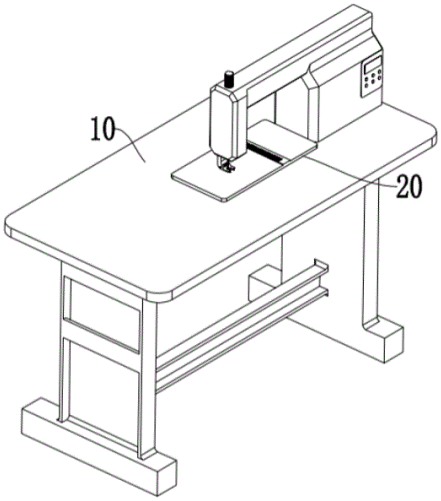

21: 2026/03702. 22: 2026/04/07. 43: 2026/11/03
51: A61B
71: Guiyang Preschool Education College
72: Jiangyan Ma

54: LUNG FUNCTION TESTER FOR CHILD HEALTH CARE

00: -

This invention relates to the field of lung function testing technology and discloses a lung function tester for child health care. The instrument includes a main body with a display screen and buttons fixedly mounted on it. A connecting tube is also fixedly mounted on the main body, and a gas delivery tube is connected to the connecting tube. A receiving component is connected to the other end of the gas delivery tube. A power component is fixedly mounted at the end of the receiving component, and a nozzle is fixedly mounted at the end of the receiving component away from the power component. The cooperation between the receiving component and the power component reduces the influence of dead space on gas composition. This invention improves the measurement accuracy for infants and young children with low lung capacity by incorporating a piston structure within the receiving component.

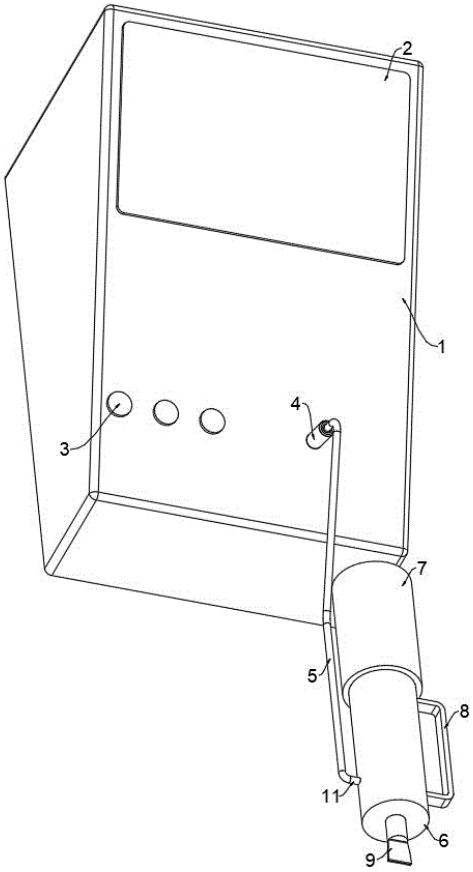

21: 2026/03709. 22: 2026/04/07. 43: 2026/11/06
51: G05B
71: Henan University of Urban Construction
72: CHENG Feifei, XU Huafeng, LIU Yuxiao, GAO Fashun, LI Yajie, LIU Changsheng, CAI Yujie, ZHOU Yiming

54: METHOD AND SYSTEM FOR ADAPTIVE COMPLIANCE CONTROL OF ROBOT JOINTS BASED ON BIFURCATION POINTS OF TRAVELING WAVE SOLUTIONS

00: -

The invention discloses a method and a system for adaptive compliance control of robot joints based on bifurcation points of traveling wave solutions, which includes: performing noise suppression processing on acquired real-time angle, speed and external force data by using Kalman filtering to obtain smooth joint motion signals; calculating dynamic fluctuation amplitude and frequency characteristics based on the smooth joint motion signals to determine a characteristic nonlinear variation trend; judging a potential interference event when the characteristic nonlinear variation trend exceeds a preset threshold, and acquiring an external force response vector corresponding to the event; performing classification

on the external force response vector by using a support vector machine to obtain a critical state classification result of joint characteristics; extracting vibration analysis parameters based on the critical state classification result to determine a priority sequence for interference processing; generating a strategy adjustment instruction based on the priority sequence, and updating a joint torque output value by using an adaptive control model; obtaining a stable compliance control response when the updated joint torque output value meets a real-time capture requirement.

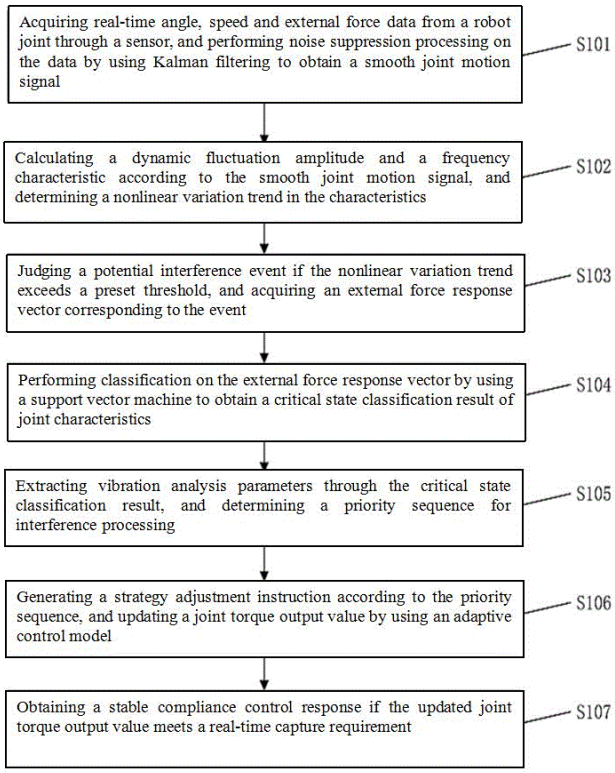

21: 2026/03710. 22: 2026/04/07. 43: 2026/11/06
51: E21B
71: Beijing Research Institute of Chemical Engineering and Metallurgy
72: LI, Xinghao, LI, Zhaokun, LI, Hongxing, YANG, Lizhi, HOU, Daiwen, WANG, Sichen, QIU, Yang, ZOU, Yuhan
33: CN 31: 202510745421.5 32: 2025-06-05
54: SINGLE-WELL INJECTION-PRODUCTION METHOD FOR LOW-PERMEABILITY SANDSTONE-TYPE URANIUM ORE
00: -
Disclosed is a single-well injection-production method for a low-permeability sandstone-type uranium ore, which belongs to the technical field of in-situ leaching of uranium. The method includes: drilling an injection-production well from a ground to a uranium ore layer; pumping liquid carbon dioxide into the uranium ore layer, and performing well soaking; injecting a leaching agent into the uranium ore layer in stages, and performing well soaking after each injection of the leaching agent; extracting leachate until a uranium concentration in the leachate decreases by 10 percent compared with an initial concentration or drops to a preset concentration; supplementing carbon dioxide and the leaching agent into a tail liquid generated after uranium recovery from the leachate to make the tail liquid reach a saturated state, and reinjecting the tail liquid in the saturated state into the uranium ore layer; and repeating operation steps in a cyclical manner.

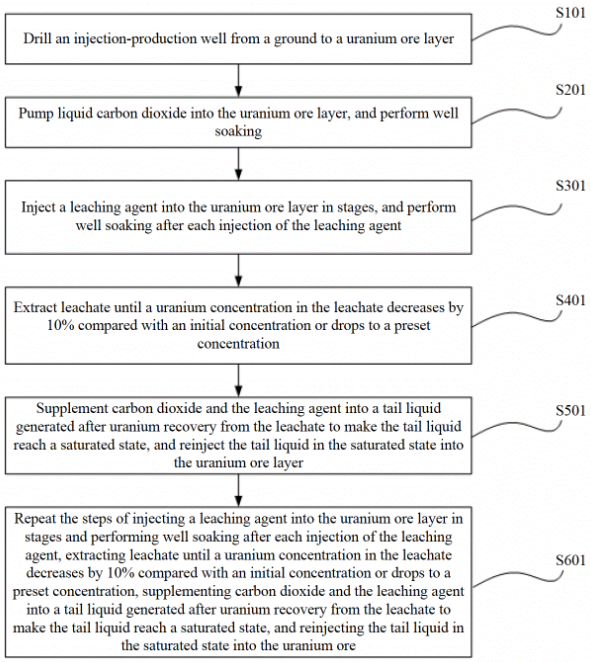

21: 2026/03711. 22: 2026/04/07. 43: 2026/11/06
51: G06F
71: Henan University of Urban Construction
72: HAN Zongyuan, LIU Lijun, HE Yawei, ZHANG Yao, LI Yajie, LI Deying, CAI Jing, LI Qiuhong, HUA Pei, SHI Yue
54: MACHINE LEARNING-BASED BUILDING ENERGY CONSUMPTION PREDICTION METHOD
00: -
The present invention relates to a machine learning-based building energy consumption prediction

method, including: adopting a long short-term memory network to process multi-category energy consumption sequence data and obtaining a fluctuation rule representation of each category of energy consumption; determining an association vector between influencing factors and fluctuation rules based on the fluctuation rule representation of each category of energy consumption; integrating the association vector through a random forest model and judging a preliminary predicted value of the overall trend; adjusting the preliminary predicted value through an iterative optimization algorithm and obtaining a refined category energy consumption prediction output; and adopting a deviation correction mechanism to process resource allocation deviations based on the refined category energy consumption prediction output and obtaining a final building energy consumption total prediction result. The present invention remarkably improves the accuracy of energy consumption prediction and resource allocation efficiency, and provides a scientific basis for building energy conservation management.

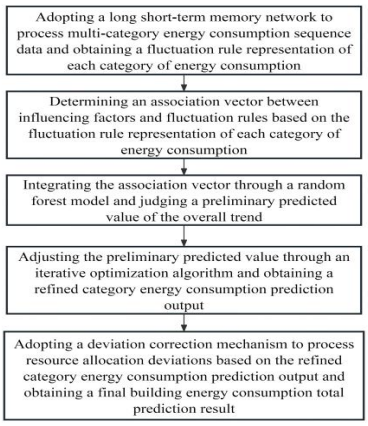

21: 2026/03712. 22: 2026/04/07. 43: 2026/11/06
51: B08B
71: BGRIMM Technology Group
72: GUO, Wanpeng, ZHAO, Jianjun, WANG, Qingkai, ZHAO, Haili, LI, Chuanwei, JI, Bo
54: ERLENMEYER FLASK CLEANING MECHANISM
00: -
Disclosed is an Erlenmeyer flask cleaning mechanism, which includes a sink, a rotating base, a first clamping assembly, and a first rotating assembly. A water inlet pipe and a water outlet pipe are disposed on the sink, and a nozzle is disposed at an opening of the water inlet pipe; the rotating base is rotatably disposed in the sink, the rotation axis of the rotating base is horizontal, and the rotating base is positioned above the nozzle and provided with a supporting portion; the first clamping assembly is disposed on the rotating base; and an output end of the first rotating assembly is connected to the rotating base. The supporting portion of the rotating base supports a bottom surface of an Erlenmeyer flask, and the first clamping assembly clamps a side surface of the Erlenmeyer flask, so that the Erlenmeyer flask and the rotating base are relatively fixed.

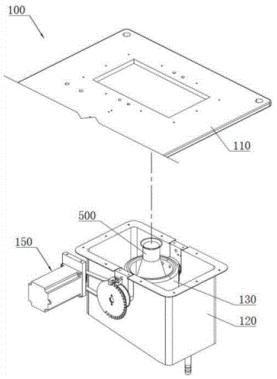

21: 2026/03713. 22: 2026/04/07. 43: 2026/11/06
51: G06F
71: Kunming University of Science and Technology, Panzhihua Pangang Group Mining Company, Yunnan Diqing NonFerrous Metal Co., Ltd.
72: Tao Deng, Lingling Zhang, Jiye Xu, Jiwei Sun, Xiangsheng Xia, Shouxing Peng, Xin Pang, Tao Chen, Cheng Zhou, Daochun Wan
54: A METHOD FOR INTELLIGENT OPTIMIZATION OF ROAD WAY BOLT SUPPORT PARAMETERS BASED ON MULTI-OBJECTIVE OPTIMIZATION AND MACHINE LEARNING
00: -
The present invention discloses a method for intelligent optimization of road way bolt support parameters based on multi-objective optimization and machine learning, belonging to the fields of smart mines and underground engineering support technology. This method, on the basis of given road way geometric dimensions and rock mass mechanical conditions, constructs different support schemes by changing the length of a single anchor bolt and the spacing between anchor bolts; FLAC 3D numerical simulation is employed to calculate the top plate settlement displacement of the road way

surrounding rock under different bolt support schemes, thereby constructing a sample training set. Fast prediction of road way support displacement is achieved based on an artificial neural network. The NSGAIII multi-objective optimization algorithm is introduced to obtain a Pareto optimal solution set that balances safety and economy, with the minimum number of bolts and the minimum total length as economic indicators, subject to the safety constraint that the top plate settlement displacement does not exceed the allowable threshold specified by the code. Through the deep coupling of ANN and NSGAIII, the present invention achieves intelligent optimization of bolt support parameters, effectively reducing bolt consumption and support costs while ensuring the long-term stability of the road way.

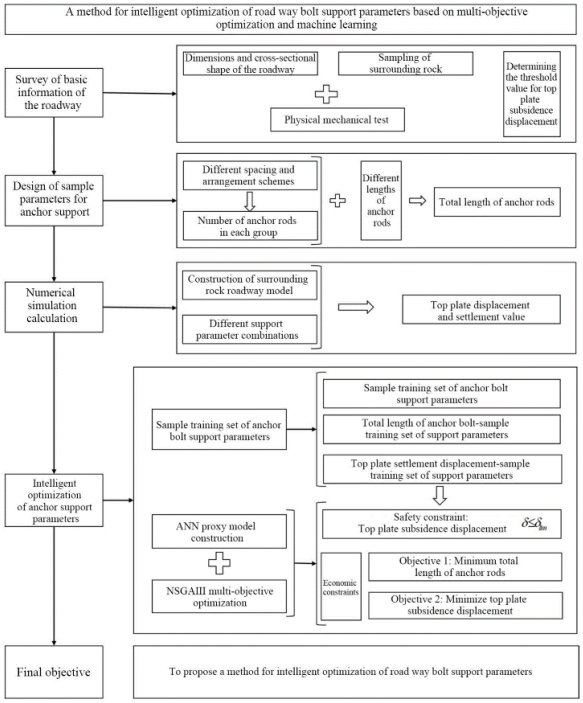

21: 2026/03716. 22: 2026/04/07. 43: 2026/11/06
51: F16K; G05D
71: CRAFFORD, Ryno Adolf
72: GOOSEN, Cornelius Johannes
33: ZA 31: 2025/03728 32: 2025-05-02
54: PRESSURE CONTROL VALVE ASSEMBLY
00: -
A pressure control valve assembly which includes a pressure control valve body having an upstream inlet port, a downstream outlet port, and a relief port, and a pressure vent valve body having a pressure vent valve inlet port and a pressure vent valve outlet port. A rotatable fastener, fast with either the pressure vent valve inlet port or the relief port, removably attaches the pressure vent valve body to the pressure control valve body at the relief port. The rotatable fastener is preferably a threaded fastener engageable with a corresponding connector formation, and may be secured with a lock ring, optionally a compression ring, fitted between the threaded fastener and the connector formation. The threaded fastener and lock ring may each independently be of metal or non-metal construction. A pressure vent valve and a pressure control valve, each carrying the rotatable fastener for detachable connection to the other, are also disclosed.

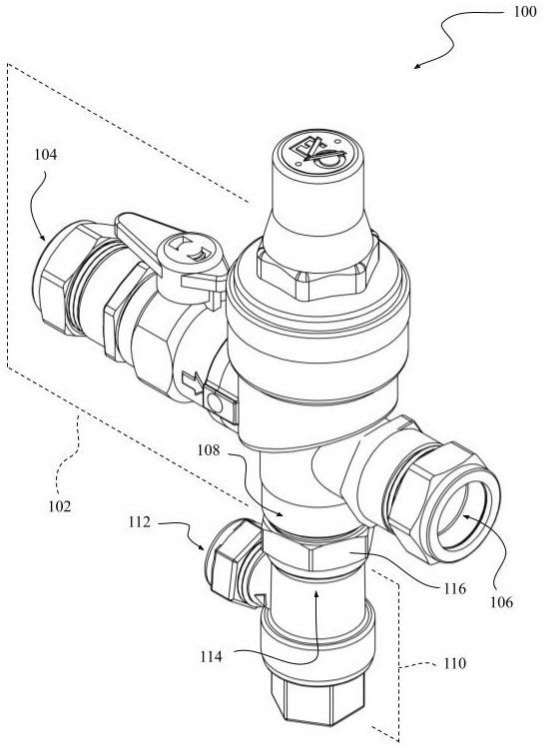

21: 2026/03717. 22: 2026/04/07. 43: 2026/11/06
51: E03B; F16K
71: CRAFFORD, Ryno Adolf
72: GOOSEN, Cornelius Johannes
33: ZA 31: 2025/05623 32: 2025-07-02
54: VACUUM BREAKER
00: -
A vacuum breaker includes a valve comprising a valve stem with two or more valve discs mounted fast with the valve stem and movable in unison between an open and a closed position. The valve

discs comprise a primary valve disc and a secondary valve disc coaxially mounted on the valve stem within a valve chamber defined by a valve body having primary and secondary valve seats registered to the respective valve discs. In use, the valve discs create primary and secondary seals under fluid flow pressure to or from a water heater, and open under reduced fluid flow pressure. The vacuum breaker includes valve guides, a biasing spring, and one or more dust covers. The valve stem is manually depressible to bleed debris from the valve chamber. In one embodiment the vacuum breaker is of combination metal and non-metal construction. A vacuum breaker installation is also disclosed.

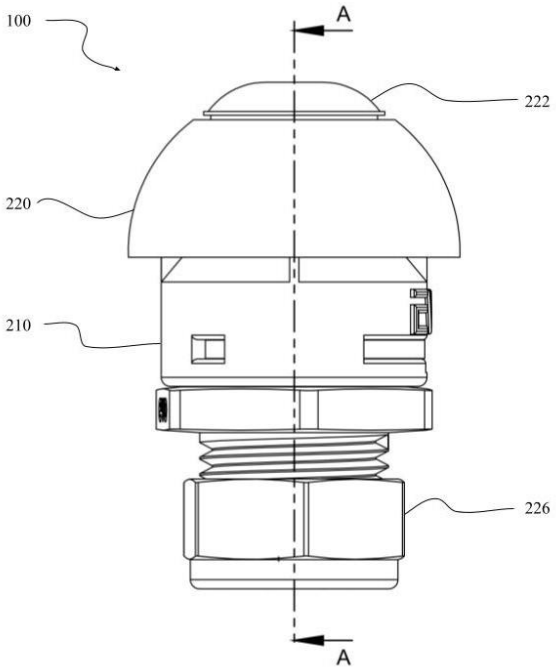

21: 2026/03718. 22: 2026/04/07. 43: 2026/11/06
51: A01K
71: VISHWAKARMA INSTITUTE OF TECHNOLOGY
72: KADAM, Priyanka Amol, RATHI, Snehal Rahul, PATHAK, Aditya Mukund, PATHRABE, Aayush Rajesh, PARIT, Aditya Arun, SHERMALE, Aditya Bajirao

54: AN AUTOMATED FOGGER-BASED MICROCLIMATE SYSTEM TO MITIGATE HEAT STRESS IN BUFFALO

00: -

An automated fogger-based microclimate modification system for mitigating heat stress in buffaloes and other dairy livestock is disclosed. The system comprises an esp32 microcontroller, a dht22 temperature and humidity sensor, a relay module, a low-voltage water pump, and fogger nozzles. The microcontroller continuously monitors ambient conditions, computes the temperature-humidity index (thi) using the formula thi = t - (0.55 - 0.0055 × rh) × (t - 14.5), and activates fogging when thi exceeds a preset threshold (typically 75). The system operates autonomously, conserving water and energy through intelligent threshold-based activation rather than continuous or timer-based operation. The invention provides a cost-effective, scalable, and modular solution suitable for small and medium-scale dairy farms, with architecture supporting future integration of iot monitoring, solar power, and machine learning-based adaptive control. The system addresses the significant agricultural challenge of heat stress, which can reduce milk yields by up to 30% in affected animals, through precise, automated environmental control.

21: 2026/03719. 22: 2026/04/07. 43: 2026/11/06
51: G01N
71: HAINAN MEDICAL UNIVERSITY(HAINAN ACADEMY OF MEDICAL SCIENCES)
72: SUN Qinghui, Li Xinna, HUANG Xueru, ZHENG Xiuju, SUN Qingsi

54: ANALYSIS METHOD OF HUANGLIAN DECOCTION AGAINST COLON ADENOCARCINOMA BASED ON SINGLE-CELL ATLAS AND PHARMACOLOGY

00: -

The invention relates to the technical field of biomedicine and modernization of traditional Chinese medicine, and provides an analysis method of Huanglian Decoction against colon adenocarcinoma based on single-cell atlas and pharmacology, which comprises the following steps: step 1, searching colon adenocarcinoma transcriptome data, clinical metadata and somatic mutation survey of TCGA database to obtain single-cell RNA sequencing data set of GEO database; quality control, standardization and integration of single-cell data are carried out to filter cells with high mitochondrial content or extreme characteristic count; step 2, screening the active ingredients in Huanglian Decoction with oral bioavailability of =30 percent and drug-like properties through TCMSP

database, and standardizing them into gene symbols through UniProt. By integrating single-cell atlas and network pharmacology, we can accurately locate the specific cell subsets of Huanglian Decoction's core target, reveal its innovative action mechanism of trajectory interruption, build a prognosis model independent of traditional genome characteristics, and clarify the relationship between drugs and immune microenvironment, which not only analyzes the core mechanism of Huanglian Decoction's anti-colon adenocarcinoma.

21: 2026/03720. 22: 2026/04/07. 43: 2026/11/06
51: H02H
71: VISHWAKARMA INSTITUTE OF TECHNOLOGY
72: SONAWANE, Ketan Rajesh, SHAMBHARKAR, Kalpak Uday, KENDRE, Vedant Madhav, TUPE, Karan Ramesh, DESHPANDE, Pallavi, RATNAPARKHI, Archana, GHULE, Gauri
54: A SYSTEM AND METHOD FOR ADAPTIVE DC MOTOR PROTECTION AND ON-DEVICE PROGNOSTIC FAULT LOGGING
00: -
A system and method for adaptive DC motor protection and on-device prognostic fault logging comprises a microcontroller, power switching element, current sensor, and non-volatile memory configured to provide intelligent motor protection through self-learning calibration. The system executes an in-situ calibration routine that automatically determines and stores the unique peak stall current of any attached DC motor without requiring manual specification entry or prior motor knowledge. This learned stall current serves as a motor-specific baseline from which adaptive protection limits are derived (typically 80% of stall current). During normal operation, the system continuously monitors real-time motor current and implements adaptive overcurrent protection based on the learned characteristics, preventing both nuisance trips on high-torque motors and inadequate protection on low-power motors. The system records comprehensive operational data and fault events to non-volatile EEPROM memory in structured log entries, creating a diagnostic history enabling prognostic maintenance analysis. Additional features include constant-current load-sensing operation mode, temporal validation to eliminate false positives, and dual power supply isolation for operational stability. The system achieves intelligent motor protection and diagnostic capabilities using low-cost commodity components (microcontroller, MOSFET, Hall-effect sensor) with total component cost under 15 USD, making it economically viable for widespread deployment. The core method scales from low-voltage hobby motors to high-voltage industrial motors through appropriate component rating selection while maintaining identical control algorithms. Industrial applications include robotics, automotive systems, consumer appliances, industrial machinery, and any application requiring reliable motor protection with prognostic maintenance capabilities.

21: 2026/03721. 22: 2026/04/07. 43: 2026/11/06
51: A61B
71: VISHWAKARMA INSTITUTE OF TECHNOLOGY
72: PATIL, Deepraj Gorakh, PATIL, Mayank Satish, PATIL, Harshvardhan Sanjay, PASARE, Prerana Anil, DESHPANDE, Pallavi, RATNAPARAKHI, Archana, GHULE, Gauri
54: AN AI-BASED FOCUS TRACKER LEARNABLE BAND FOR COGNITIVE STATE MONITORING AND LEARNING ENHANCEMENT
00: -
An AI-based wearable focus tracker band for real-time cognitive state monitoring and learning enhancement comprises multi-modal physiological sensors including photoplethysmography (MAX30102) for heart rate variability measurement, inertial motion unit (MPU6050) for movement and posture detection, precision temperature sensor (TMP117) for thermal monitoring, and optional electrocardiography (AD8232) for enhanced cardiac signal acquisition. An ESP32-S3 dual-core microcontroller performs continuous sensor data acquisition, digital signal processing for artifact removal, feature extraction computing 15-25 physiological and behavioral metrics, and embedded machine learning inference using a TensorFlow Lite Micro optimized neural network to classify cognitive state as focused, confused, or distracted with 87% accuracy. Upon confusion detection, a haptic feedback system (DRV2605L driver with vibration motor) provides immediate non-intrusive alert. Confusion event timestamps are transmitted via Bluetooth Low Energy to a companion application that synchronizes with educational video content,

automatically generating bookmarks at video positions corresponding to detected confusion for efficient later review. The system implements personalized baseline calibration accommodating inter-individual physiological variability, achieving universal applicability without manual configuration. Power optimization techniques enable 12–14-hour continuous operation on 250-500 mAh battery. The wearable headband form factor positions sensors optimally while maintaining comfort during extended learning sessions. Industrial applications span educational institutions, e-learning platforms, corporate training, research (cognitive load studies, educational psychology), healthcare (ADHD management, cognitive rehabilitation), and consumer self-directed learning. The system provides objective, quantitative assessment of learning engagement, enabling data-driven curriculum improvement, personalized learning adaptation, and enhanced study efficiency through automated identification of confusing content requiring review. The low-cost implementation (30-40 production cost) combined with privacy-preserving edge computing makes advanced AI-driven educational enhancement accessible to broad student populations.

21: 2026/03722. 22: 2026/04/07. 43: 2026/11/06
51: A63F
71: VISHWAKARMA INSTITUTE OF TECHNOLOGY
72: KADAM, Priyanka, RATHI, Snehal Rahul, BIRAJDAR, Ruchika, ATRAM, Aniket, BAGUL, Ansh, BHONGALE, Yash

54: AN INTEGRATED BLUETOOTH BASED ADAPTIVE GESTURE-CONTROLLED GAMING GLOVE

00: -

The present invention discloses an integrated Bluetooth-based adaptive gesture-controlled gaming glove designed as a wearable input device for immersive PC gaming and interactive applications. It overcomes limitations of traditional controllers by combining stable gesture recognition from hand tilts with discrete tactile inputs, using low-cost components: an Arduino Nano microcontroller, MPU-6050 six-axis accelerometer/gyroscope, HC-05 Bluetooth module, push buttons/flex sensors, and rechargeable battery, all mounted on a fabric glove. The Arduino Nano processes raw inertial data via I2C, applies complementary or Kalman filtering for sensor fusion to derive accurate pitch/roll orientations, detects gestures (e.g., forward tilt for movement), debounces buttons for actions like jumping, and transmits encoded commands wirelessly at 115200 baud. A host Python script decodes data, applies dead-zone smoothing, and emulates standard keyboard/mouse HID events for seamless compatibility with unmodified games. Calibration sets neutral hand position on startup for drift-free operation. This low-latency, ergonomic system enhances natural interaction, portability, and accessibility, with potential for VR/AR or rehabilitation use. No prior art exactly matches this Arduino Nano/MPU-6050/HC-05 integration for HID-emulated gesture gaming gloves.

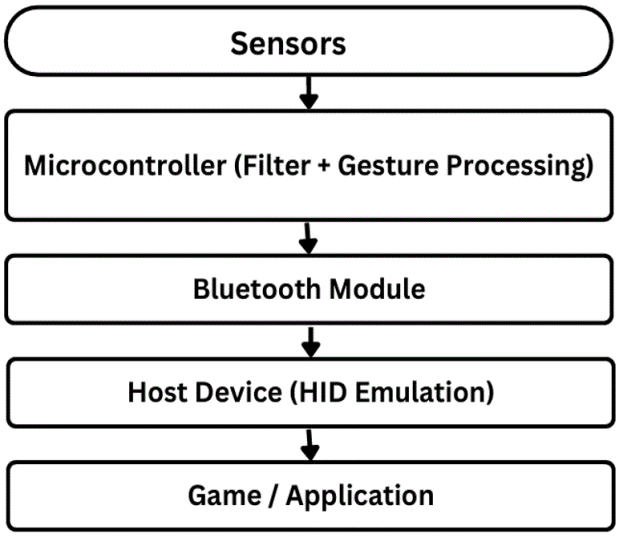

21: 2026/03723. 22: 2026/04/07. 43: 2026/11/06
51: E05B
71: VISHWAKARMA INSTITUTE OF TECHNOLOGY
72: CHAVHAN, Pranali, WANKHEDE, Disha, GAIKWAD, Vidya, CHAUDHARI, Prasad, CHAVHAN, Gajanan

54: AN AFFORDABLE SMART LOCKING SYSTEM FOR ENHANCED SECURITY

00: -

The invention relates to a microcontroller based smart locking system that provides an affordable and secure access control solution using dual mode authentication. The system comprises a rfid reader, a keypad, a microcontroller, a locking actuator such as a servo motor or solenoid, and user interface

elements including a lcd display and buzzer. The microcontroller validates rfid identification codes and/or keypad entered passwords against stored credentials and actuates the locking mechanism to unlock the door for a limited time when authentication conditions are met. Unsuccessful attempts increment an internal counter, and after a predefined threshold the system enters a lockout state and activates an alert to resist brute force attacks. Real time feedback is provided through the display and indicators. The invention offers a low cost, reliable, and easily deployable alternative to single mode electronic locks and expensive biometric systems for residential, commercial, and institutional security applications.

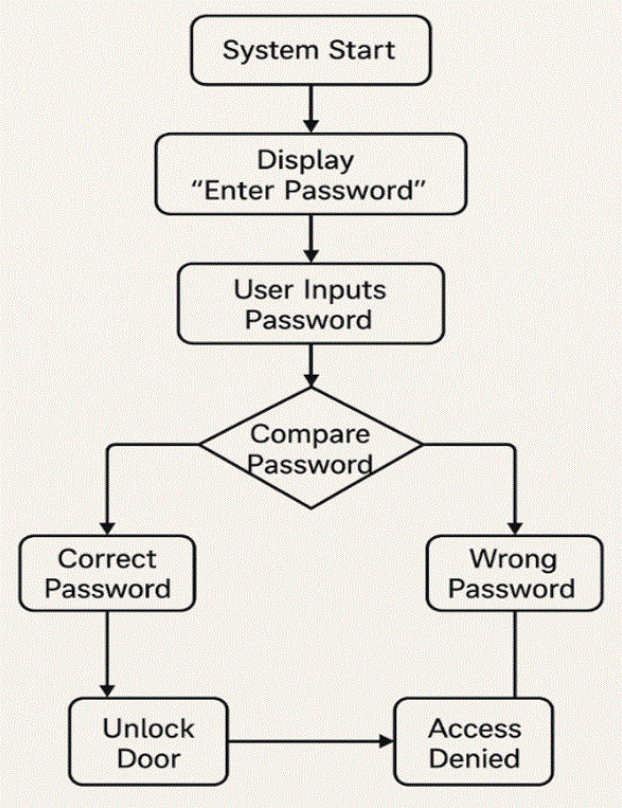

21: 2026/03724. 22: 2026/04/07. 43: 2026/11/06
51: A61H
71: VISHWAKARMA INSTITUTE OF TECHNOLOGY
72: CHOLKE, Puja, MANDAGE, Samidha, MANE, Shivam, MHASHAKHETRI, Krish, MORE, Krish, MUNESHWAR, Niharika

54: AN IOT-ENABLED NAVIGATION CANE DEVICE WITH ADAPTIVE HAPTIC FEEDBACK FOR ENHANCED MOBILITY AND SAFETY OF BLIND USERS

00: -

An iot-enabled navigation cane device for visually impaired users integrates multi-directional ultrasonic obstacle detection, adaptive haptic feedback, servo motor-based directional guidance, and emergency alert communication in a unified assistive mobility aid. The device employs an esp32 microcontroller executing sensor fusion algorithms to classify environmental conditions into safe, caution, and danger zones based on obstacle proximity detected by multiple hc-sr04 ultrasonic sensors and mpu6050 inertial measurement unit. Adaptive haptic feedback via vibration motor provides distance-proportional tactile alerts, with vibration patterns optimized through multi-armed bandit machine learning algorithm that personalizes feedback based on individual user response effectiveness. A servo motor provides physical tilt-based directional guidance steering the cane handle toward obstacle-free paths when asymmetric obstacle distribution is detected. Emergency alert functionality enables users to activate sos alerts via hardware switch or mobile application, transmitting real-time gps location to pre-registered contacts through multiple redundant communication channels including bluetooth, iot cloud platforms, and gsm networks. The device achieves 8-12 hours continuous operation on rechargeable li-ion battery, providing affordable and accessible technology that significantly enhances mobility, safety, and independence for visually impaired individuals compared to traditional white canes and prior art smart canes.

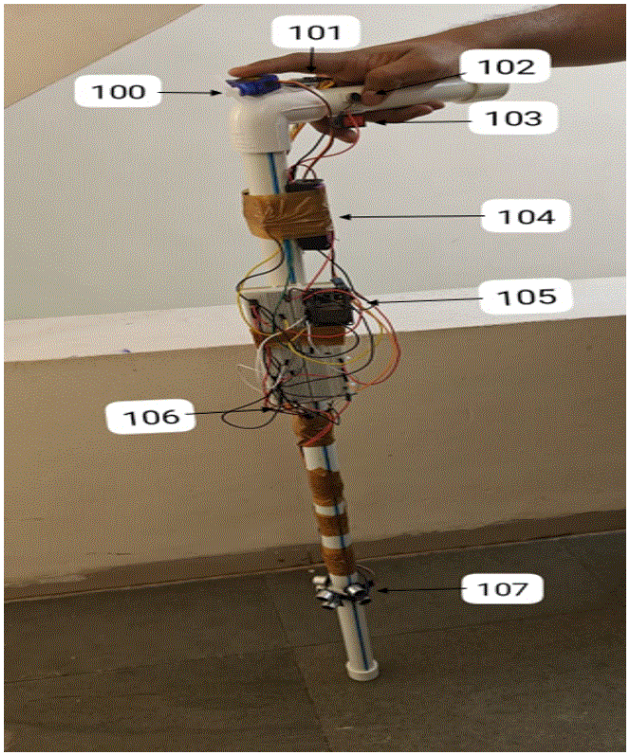

21: 2026/03725. 22: 2026/04/07. 43: 2026/11/06
51: G06Q
71: VISHWAKARMA INSTITUTE OF TECHNOLOGY
72: BAMB, Rushikesh Chhagan, MUTHA, Vidhi Ramesh, KULKARNI, Prathmesh Suhas, KOLHE, Pranav Dadabhau, WAWAGE, Pawan Subhash, SOMATKAR, Avinash Abhiman

54: A UNIFIED DIGITAL VILLAGE SYSTEM FOR E-GOVERNANCE AND CITIZEN SERVICES

00: -

A comprehensive web-based digital village portal system implementing modern MERN stack technologies (MongoDB, Express.js, React.js, Node.js) to transform rural administration and citizen service delivery. The system integrates essential village governance functions including online tax payment processing through Razorpay payment gateway with automated PDF receipt generation, systematic grievance management with photograph uploads and multi-stage progress tracking, citizen record management with search capabilities, bilingual content delivery supporting English and regional languages, and administrative analytics dashboards with reporting and data export functionality. The invention implements JWT-based secure authentication with role-based access control, cloud-based media storage, real-time notification systems, and responsive design for cross-device accessibility. This integrated approach overcomes inefficiencies of traditional paper-based village administration, providing transparent, accessible, and efficient digital governance that bridges the rural digital divide and empowers citizens with 24/7 access to essential services while enabling data-driven administrative decision-making.

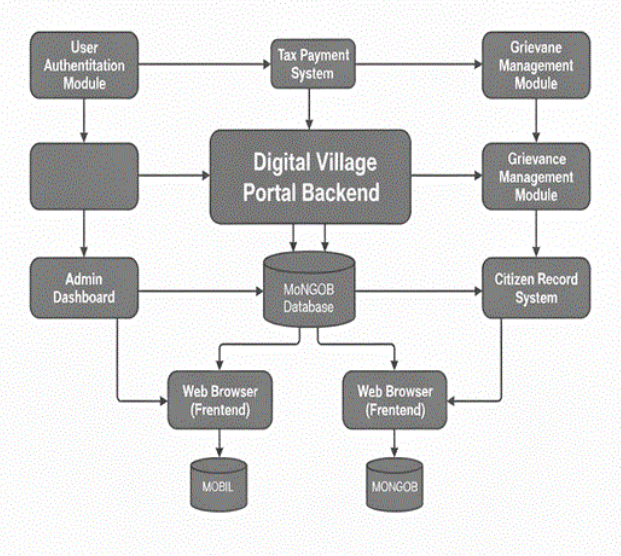

21: 2026/03726. 22: 2026/04/07. 43: 2026/11/06
51: G06F
71: VISHWAKARMA INSTITUTE OF TECHNOLOGY
72: CHOLKE, Puja, MANGADE, Anushka Mugaji, KASSA, Atharva Jayant, KIRAD, Gururaj Vinayak, MISHRA, Piyush Jwalaprasad, NAGMULE, Pranjal Dayanand

54: A SYSTEM FOR DIFFUSION-CONTROLLED AESTHETIC QR CODE GENERATION USING TEXT-TO-IMAGE GUIDANCE

00: -

The invention discloses a computer implemented system for generating aesthetic, visually enhanced and fully scannable QR codes using diffusion based generative models. A conventional QR code is first generated with configurable error correction levels and module geometries, then preprocessed by enhancement and resizing to a diffusion compatible resolution. A Stable Diffusion model conditioned by a QR specific controlnet receives the preprocessed QR matrix together with text prompts and/or reference images to synthesize an artistic QR image while preserving structural integrity. Generation parameters such as controlnet strength, classifier

free guidance scale, schedulers and denoising steps are adjusted via an interactive interface, with empirically optimized ranges that jointly maximize aesthetics and scan ability. An automated Scan Validation Module employs computer vision decoding and optional CLIP based scores to accept only images that remain reliably scannable. The system provides a reproducible, high performance framework for producing diverse artistic QR codes suitable for digital marketing, branding, secure visual encoding and creative content applications.

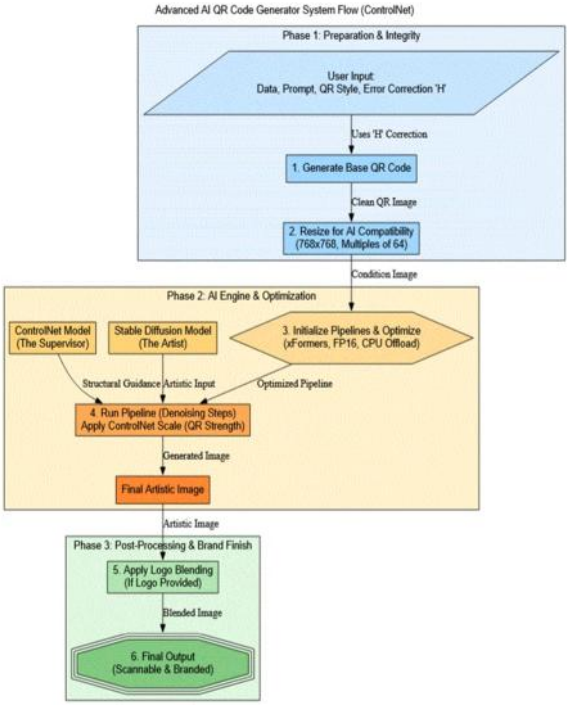

21: 2026/03727. 22: 2026/04/07. 43: 2026/11/06
51: A01G
71: VISHWAKARMA INSTITUTE OF TECHNOLOGY
72: CHANNOTE, Piyush Laxman, BHALERAO, Pranav Rahul, GURAV, Prasad Hanamant, DESHPANDE, Pallavi

54: A LORA-BASED SMART AGRICULTURE MONITORING AND AUTOMATED IRRIGATION SYSTEM

00: -

The present invention discloses a LoRa-based smart agriculture monitoring and automated irrigation system addressing the challenges of water management, real-time environmental monitoring, and irrigation automation in rural and remote farming environments. The system integrates wireless sensor networks, long-range low-power communication, and automated control to enable efficient agricultural practices without dependence on conventional network infrastructure. The system comprises a transmitter unit deployed in agricultural fields and a receiver unit located at a monitoring location. The transmitter unit includes a microcontroller (Arduino Nano) interfaced with soil moisture sensors, soil temperature sensors (DS18B20), and ambient temperature and humidity sensors (DHT22). Based on real-time soil moisture measurements, the microcontroller automatically controls an irrigation pump through a relay module, activating irrigation when moisture falls below a predetermined threshold and deactivating when moisture returns to acceptable levels. Sensor data and irrigation status are transmitted wirelessly via LoRa SX1278 communication modules operating in sub-GHz ISM bands, achieving transmission ranges up to 8 kilometers in open-field conditions with minimal power consumption. The receiver unit, based on an ESP8266 microcontroller, receives transmitted data and provides dual-mode visualization: offline monitoring through a local OLED/LCD display and online monitoring through cloud-based web dashboards and mobile applications when internet connectivity is available. Field trials demonstrate reliable long-range communication, accurate sensor performance, automated irrigation efficiency with 25-35% water savings compared to manual practices, and low power consumption enabling battery or solar-powered operation. The system provides a scalable, cost-effective solution for sustainable agriculture, particularly suited for rural and remote farming regions with limited infrastructure.

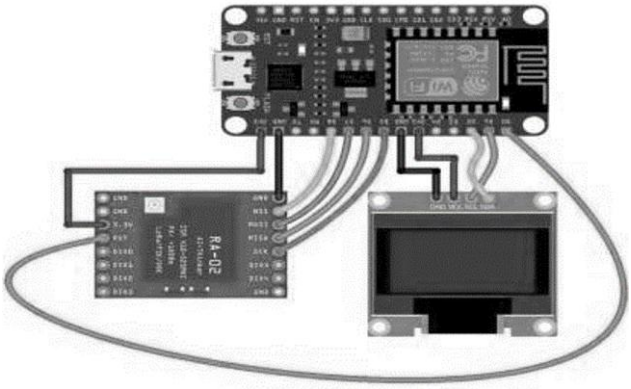

21: 2026/03728. 22: 2026/04/07. 43: 2026/11/06
51: G08G
71: VISHWAKARMA INSTITUTE OF TECHNOLOGY
72: SONAWANE, Purushottam Vasant, RASAL, Runal Dipak, RODGE, Bhushan Duryodhan, DESHPANDE, Pallavi Devendra
54: A REAL-TIME VEHICLE ACCIDENT DETECTION AND ALERT SYSTEM USING 4G CONNECTIVITY
00: -
This invention presents an IoT-based real-time vehicle accident detection and emergency alert system employing an ESP32 microcontroller, MPU6050 six-axis accelerometer-gyroscope sensor, NEO-6M GPS receiver, and SIMA7670C LTE/GSM communication module. The system detects abnormal impact forces through threshold-based multi-sensor fusion logic with temporal validation to eliminate false positives, confirming collision events with greater than 95% accuracy while maintaining false-alarm rates below 5%. Upon accident confirmation, the system retrieves precise GPS coordinates and transmits immediate emergency alerts containing accident notification, timestamp, and location data via redundant communication pathways comprising both LTE data transmission and SMS messaging to ensure reliable delivery under varying network conditions. Experimental validation confirmed detection-to-alert response time under 8 seconds. The system architecture implements edge-level processing on the ESP32 microcontroller, eliminating cloud dependency and minimizing latency. The optimized design achieves production cost under 2,000, operates with low power consumption suitable for battery backup operation, and supports integration into two-wheelers, four-wheelers, and commercial fleet vehicles. The invention addresses critical needs in automotive safety, emergency response coordination, fleet management, insurance telematics, and smart transportation infrastructure, providing a practical and economically viable solution for large-scale deployment to reduce accident-related fatalities through faster emergency response.

21: 2026/03729. 22: 2026/04/07. 43: 2026/11/06
51: A61B
71: VISHWAKARMA INSTITUTE OF TECHNOLOGY
72: KHUBCHANDANI, Payal, KHUBCHANDANI, Jyoti, KARKELE, Om
54: A PHYSIOLOGICAL STRESS RESPONSIVE HARDWARE INTERLOCK SYSTEM FOR AUTOMATIC OPERATOR SAFETY CONTROL
00: -
This invention discloses a physiological stress responsive hardware interlock system for improving operator safety in industrial and vehicular environments. The system employs analog differential physiological sensing to generate a net stress signal while suppressing motion-induced artifacts through subtraction of passive reference sensor signals from active control interface sensor signals. Hardware comparator thresholds govern graded safety intervention, wherein mechanical impedance is applied to control interfaces during elevated physiological stress (providing tactile warning) and a fail-safe electrical interlock enforces a safe state under critical conditions (preventing unsafe operation). The invention provides a non-invasive, hardware-dominant, and privacy-preserving safety mechanism suitable for continuous real-world operation without dependency on camera-based monitoring or cloud connectivity. The system operates deterministically through hardware circuitry independent of software execution, ensuring reliable fail-safe behavior during power loss or component failure.

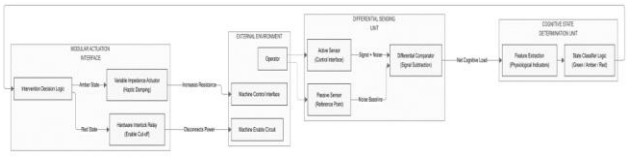

21: 2026/03730. 22: 2026/04/07. 43: 2026/11/06

51: A61M
71: VISHWAKARMA INSTITUTE OF TECHNOLOGY
72: KHUBCHANDANI, Payal, KHUBCHANDANI, Jyoti, KARKELE, Om
54: A NON-INVASIVE INTRAVENOUS AUTO-CUTOFF REGULATOR ASSEMBLY
00: -
This invention discloses nivara (non-invasive intravenous auto-cutoff regulator assembly), a novel medical safety device designed to prevent air embolism and blood backflow during intravenous therapy through automated mechanical intervention. Conventional iv monitoring relies on passive alarms requiring human response or expensive electronic infusion pumps, both presenting limitations in resource-constrained healthcare environments. Nivara employs a stored-energy occlusion architecture wherein a compressed steel spring provides mechanical clamping force while a low-power micro-servo motor functions solely as an electronic trigger. A load cell continuously monitors iv fluid container weight; upon detecting depletion below a calibrated threshold, a microcontroller commands the servo to release a latch mechanism. The stored spring energy instantaneously propels an occluding member forward, compressing the iv tube against a rigid anvil wall and achieving complete flow cessation in less than 0.5 seconds. This energy decoupling innovation enables fail-safe operation independent of electrical power during actuation, extended battery life (60+ hours continuous monitoring), and instantaneous response superior to motor-driven alternatives. Fabricated using 3d-printed housing and commodity electronic components, the device achieves a target manufacturing cost below 800, representing a 98% cost reduction compared to electronic infusion pumps while providing critical automatic shutoff functionality. The device is non-invasive, retrofittable to standard iv administration sets, and suitable for deployment in public hospitals, home healthcare, and field medicine applications where cost constraints, power reliability, and staffing limitations make conventional solutions impractical.

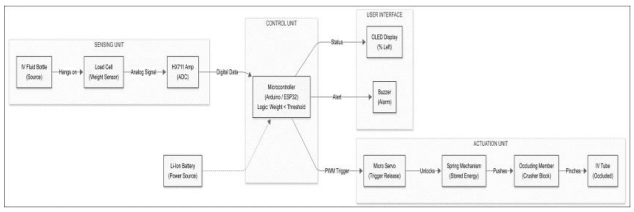

21: 2026/03731. 22: 2026/04/07. 43: 2026/11/06
51: H02M
71: VISHWAKARMA INSTITUTE OF TECHNOLOGY
72: RAJURKAR, Sudhanwa Devendra, RATHI, Vedant Vinit, RAI, Abhyuday Udaylal, DINGREJA, Rishi Vikram, DESHPANDE, Pallavi Devendra
54: A FULL-BRIDGE ACTIVE RECTIFIER CIRCUIT USING LOW-RESISTANCE MOSFETS WITH IDEAL DIODE CONTROLLER
00: -
A full-bridge active rectifier circuit converts alternating current (AC) input to direct current (DC) output with ultra-high efficiency exceeding 99% by replacing conventional diodes with four ultra-low-resistance N-channel power MOSFETs (RDS (on) < 5mO, preferably 2-3mO such as FDP2D3N10C devices) controlled by an intelligent ideal diode bridge controller integrated circuit (such as LT4320). The controller continuously senses AC input polarity and automatically generates appropriate gate drive signals to enhance the correct MOSFET pair during each half-cycle, achieving forward voltage drop of less than 100 millivolts at 10 ampere load current compared to approximately 1400 millivolts for conventional silicon diode bridges—a 25-30× reduction. The system provides automatic zero-crossing management with rapid MOSFET turn-off preventing reverse current, operates frequency-agnostically from 40-400 Hz without external synchronization, and achieves power dissipation so low (< 1 watt at 10A) that heatsinks are eliminated. Total component count of five active devices (one controller, four MOSFETs) dramatically simplifies implementation compared to traditional synchronous rectifiers while achieving equivalent or superior performance. Industrial applications span consumer electronics, industrial automation, telecommunications, renewable energy, automotive, LED lighting, medical equipment, and battery charging systems where high efficiency, low thermal dissipation, increased output voltage, and compact size provide substantial performance and economic

benefits. The invention enables cost-effective ultra-high-efficiency rectification previously achievable only through expensive, complex synchronous rectifier designs, making advanced power conversion technology accessible across diverse applications and market segments.

21: 2026/03732. 22: 2026/04/07. 43: 2026/11/06
51: G06F
71: VISHWAKARMA INSTITUTE OF TECHNOLOGY
72: CHOLKE, Puja, NYAYAPATHI, Shreekar, WAKLE, Prajwal, SABBENWAD, Akshay, RATHOD, Samadhan, KATKAR, Pratyunsh
54: A SYSTEM AND METHOD FOR REAL-TIME NEWS ARTICLE VERIFICATION USING LIGHTWEIGHT TEXT ANALYSIS AND IMAGE FORENSICS
00: -
Clearlens is a browser-extension-based system for real-time verification of online news articles. The system comprises a browser extension that extracts article headlines, representative lead text, and image urls from web pages, and a lightweight flask backend server that performs dual-modality analysis. The text analysis module computes token-set similarity between headlines and body text using jaccard-like metrics and optionally generates suggested alternative headlines through guarded semantic analysis with transformer models when available. The image forensics module performs error-level analysis through image recompression and exif metadata inspection with conservative multi-indicator flagging. Results are aggregated into a structured json report containing similarity scores, misleading flags, suggested headlines, and per-image forensic findings, which the browser extension renders in an accessible popup interface. The system operates on standard desktop hardware without gpu requirements, provides transparent and explainable results, implements graceful degradation when optional components are unavailable, and performs transient per-request processing without persistent data storage, enabling both professional editors and ordinary readers to assess news article credibility in real-time.

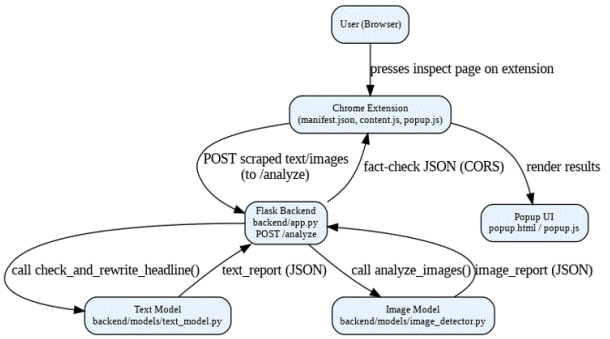

21: 2026/03733. 22: 2026/04/07. 43: 2026/11/06
51: A61B
71: VISHWAKARMA INSTITUTE OF TECHNOLOGY
72: KHUBCHANDANI, Payal, KHUBCHANDANI, Jyoti, KARKELE, Om
54: AN IOT-ENABLED REAL-TIME ARRHYTHMIA MONITORING SYSTEM USING HYBRID HLP-GAF FEATURE FUSION
00: -
This invention discloses a novel internet of things (iot) enabled system for real-time cardiac arrhythmia monitoring that integrates hybrid feature fusion across morphological and topological signal domains. Current arrhythmia detection systems are limited by analyzing electrocardiogram (ECG) signals solely as one-dimensional time-series data, missing subtle topological irregularities characteristic of pre-arrhythmic states. The present invention overcomes these limitations through a distributed edge-cloud architecture comprising: (i) a wearable device that performs lightweight hexadecimal local pattern (hlp) extraction to capture morphological characteristics through bit-wise encoding, and (ii) a cloud processing server that executes gramian angular field (gaf) transformation to reveal topological texture patterns through polar coordinate mapping. The hlp features and gaf features are fused and classified using a weighted xgboost algorithm optimized for medical dataset class imbalance. Validation on the mit-bih arrhythmia database demonstrates 97.30% classification accuracy with 94% precision and 90% recall for abnormal heartbeats, while maintaining low power consumption (<50 mw edge processing) and low bandwidth requirements (<2 kbps). The system enables reliable real-time cardiac monitoring suitable for telemedicine, wearable consumer electronics, and critical care applications.

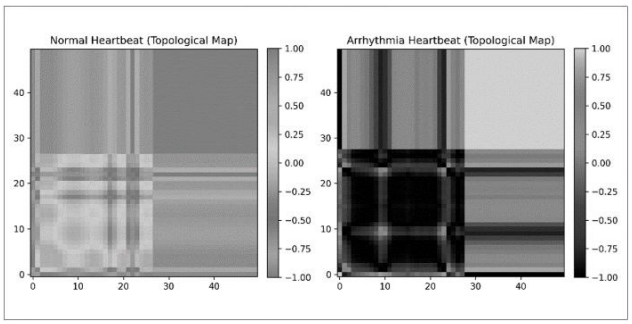

21: 2026/03734. 22: 2026/04/07. 43: 2026/11/06
51: G06N
71: VISHWAKARMA INSTITUTE OF TECHNOLOGY
72: CHOLKE, Puja, RAUT, Sameer, PINGAT, Soham, POKALE, Vaibhav, POWAR, Sujal, WAGHCHAURE, Sandip

54: AN AI-DRIVEN EMOTION-ADAPTIVE VR SYSTEM FOR RECRUITMENT AND EMPLOYEE TRAINING

00: -

An ai-driven, emotion-adaptive system for recruitment and employee training is disclosed. The system captures user data including textual responses, facial video, and audio signals, and performs multimodal emotion analysis using natural language processing models for text, convolutional neural networks for facial expressions, and temporal neural networks for vocal tone. Outputs from these modalities are fused into a unified emotional state representation that drives an adaptive questioning engine for dynamic interview flows and a virtual reality training engine for immersive, emotion-aware scenarios. A backend server orchestrates communication between ai modules, vr simulations, and an hr dashboard via apis, while logging all interactions for evaluation and model improvement. The invention reduces hr bias, increases engagement, and improves assessment and training effectiveness by continuously adapting questions and vr content based on real-time emotional responses.

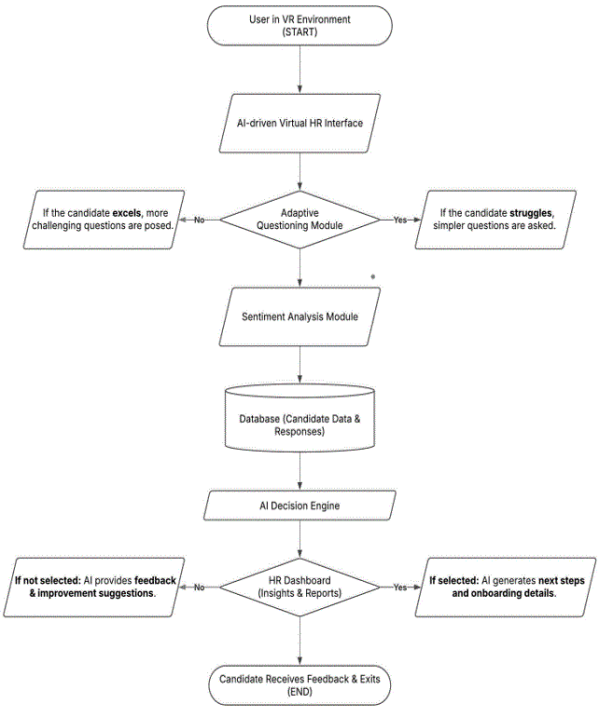

21: 2026/03735. 22: 2026/04/07. 43: 2026/11/06
51: B41F
71: Qingdao Jinhuiyuan Electronics Co., Ltd.
72: LI Depeng, CHENG Wenjuan, XU Haitao

54: SCREEN PRINTING DEVICE FOR GLASS PASTE

00: -

The present invention relates to the technical field of screen printing and provides a screen printing device for glass paste. The device includes a placing plate for placing a wafer or a chip. Bearing plates are arranged on left and right sides of the placing plate, a receiving groove is disposed on each of the two bearing plates, and the two receiving grooves, when combined, are capable of forming a pattern that coincides with the wafer or the chip. By supporting and limiting the wafer or the chip from below and around through the two bearing plates, when glass paste located outside the wafer or chip passes through a screen during screen printing, the glass paste is blocked by the bearing plates, preventing the glass paste from being squeezed onto sidewalls of the wafer. Moreover, top ends of the bearing plates are flush with a top end of the wafer or the chip, and the contact area with the screen is enlarged through the presence of the bearing plates, preventing tension of the screen around the wafer or the chip from being altered when the squeezed glass

paste passes through the screen during movement of squeegee, ultimately avoiding displacement of screen mesh and improving the printing quality.

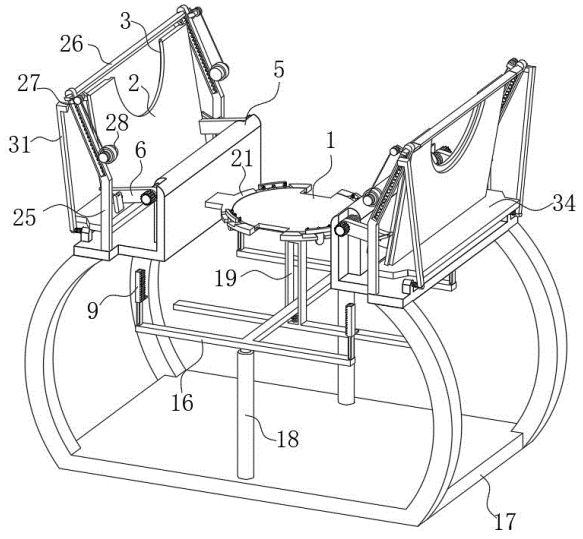

21: 2026/03736. 22: 2026/04/07. 43: 2026/10/13
51: C01B; C25B
71: HYSTAR AS
72: VAN OORT, Eduard Richard, THOMASSEN, Magnus
33: NO 31: 20230953 32: 2023-09-07
54: A WATER ELECTROLYSER SYSTEM AND METHOD FOR PRODUCING COMPRESSED HYDROGEN
00: -
The present invention relates to a water electrolyser system for production of compressed hydrogen, comprising a water electrolyser stack, a multiphase pump arranged downstream of the electrolyser stack and a hydrogen gas/liquid separator. The multiphase pump is arranged between the water electrolyser stack and the hydrogen gas/liquid separator. The present invention also relates to a method for production of compressed hydrogen in a water electrolyser system including: supplying deionized water or liquid electrolyte to a water electrolyser stack; producing hydrogen in a water electrolyser stack; compressing a mixture of produced hydrogen and entrained deionized water or liquid electrolyte in a multiphase pump; and separating the compressed mixture of produced hydrogen and entrained deionized water or liquid electrolyte in a hydrogen gas/liquid separator.

21: 2026/03738. 22: 2026/04/07. 43: 2026/11/06
51: A61B; A61J; G01N
71: IOTA DIAGNOSTIC PRIVATE LIMITED
72: SHITOLE, Vaibhav Tatyasaheb, SHARMA, Rajiv, CHANDRA, Somesh, SEPTA, Vidisha, VERMA, Pradeep Kumar
33: IN 31: 202321067654 32: 2023-10-09
54: MENSTRUAL FLUID SAMPLING DEVICE
00: -
A menstrual fluid sampling device comprising: a strip (S) made with a super- macroporous material, which collects and stores bio-fluids for analysis, said material being formed into blobs (B) and placed atop said strip (S), in a discrete manner such that two adjacent blobs (B) are spaced apart from each other, each of said blobs (B) serve as receptacle material for biological fluids, said blobs (B) sandwiched in between two membrane layers (UL, LL); said two membrane layers (UL, LL) consisting, essentially, of an upper layer (UL) having: one or more chambers (CH), each of said blobs being stored in corresponding chambers (CH) by way of encapsulation; perforations, with openings (O), which allow fluid inside said one or mode chambers (CH) by capillary action; and said two membrane layers (UL, LL) consisting, essentially, of a lower layer (LL) having: a removable layer configured to be peeled off before use.

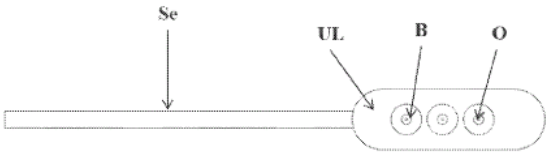

21: 2026/03742. 22: 2026/04/07. 43: 2026/09/10
51: A01N; C07D; A01P
71: QINGDAO KINGAGROOT CHEMICAL COMPOUND CO., LTD.
72: LIAN, Lei, PENG, Xuegang, HUA, Rongbao
33: CN 31: 202311189770.0 32: 2023-09-14
33: CN 31: 202311747118.6 32: 2023-12-19
33: CN 31: 202411096509.0 32: 2024-08-09
54: PYRIPYROPENE DERIVATIVE, AND COMPOSITION AND USE THEREOF
00: -
The present invention belongs to the technical field of pesticides, and particularly relates to a pyripyropene derivative, and a composition and the use thereof. The compound is as represented by general formula I, wherein X_1 represents hydrogen or fluorine, X_2 represents hydrogen or fluorine,

X_3 represents hydrogen or fluorine, X_4 represents hydrogen or fluorine, and X_1, X_2, X_3 and X_4 are not hydrogen simultaneously; R_1 and R_2 each independently represent hydrogen, alkyl, alkenyl, alkynyl, cycloalkyl, cycloalkylalkyl or -(CO)R_3; Y_1 represents hydroxyl, alkoxyalkyloxy, trialkylsilyloxy or -O(CO)R_3; Y_2 represents hydrogen or alkyl; or Y_1 and Y_2 together form = O. The compound has an excellent prevention and control effect on pests such as Myzus persicae, Apolygus lucorum, Rhopalosiphum padi and Bemisia tabaci.

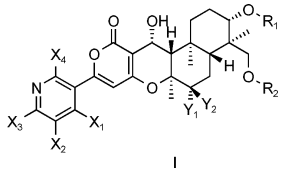

I

21: 2026/03777. 22: 2026/04/08. 43: 2026/11/09
51: C02F
71: Kunming University of Science and Technology
72: LIU Bingguo, DAI Ruoyu, YUWEN Chao, GONG Siyu, ZHOU Junwen

54: UV-ASSISTED SULFIDATION ARSENIC REMOVAL METHOD FOR COPPER SMELTING ARSENIC-CONTAINING WASTE ACID

00: -

The present invention discloses a UV-assisted sulfidation arsenic removal method for copper smelting arsenic-containing waste acid, belonging to the technical field of industrial wastewater treatment. The present invention comprises the following steps: (1) adjusting pH value of copper smelting arsenic-containing waste acid to 1-2; (2) adding formic acid to the copper smelting arsenic-containing waste acid with pH adjusted in step (1), adding ferrous sulfate to make ferrous ion concentration in wastewater 0.5-2 millimoles per liter, then irradiating wastewater with UV light to obtain pretreated wastewater; (3) keeping UV irradiation state, introducing hydrogen sulfide gas into pretreated wastewater, controlling introduction rate of hydrogen sulfide gas by a gas flow meter, simultaneously supplementing hydrogen ion consumed by hydrogen sulfide gas to maintain pH environment in liquid, and obtaining turbid liquid after reaction; (4) centrifuging and filtering turbid liquid in step (3) to obtain precipitate and clear liquid, thus completing arsenic removal. By adjusting wastewater pH, combining with UV irradiation of formic acid to generate active carboxyl radical radicals, introducing ferrous ions into the system as a photo-assisted catalyst, and introducing hydrogen sulfide gas as a sulfidation agent, the present invention effectively reduces sulfidation agent usage, alleviates environmental protection pressure, and simultaneously achieves excellent removal of copper ions and arsenic ions while ensuring a relatively high arsenic removal rate.

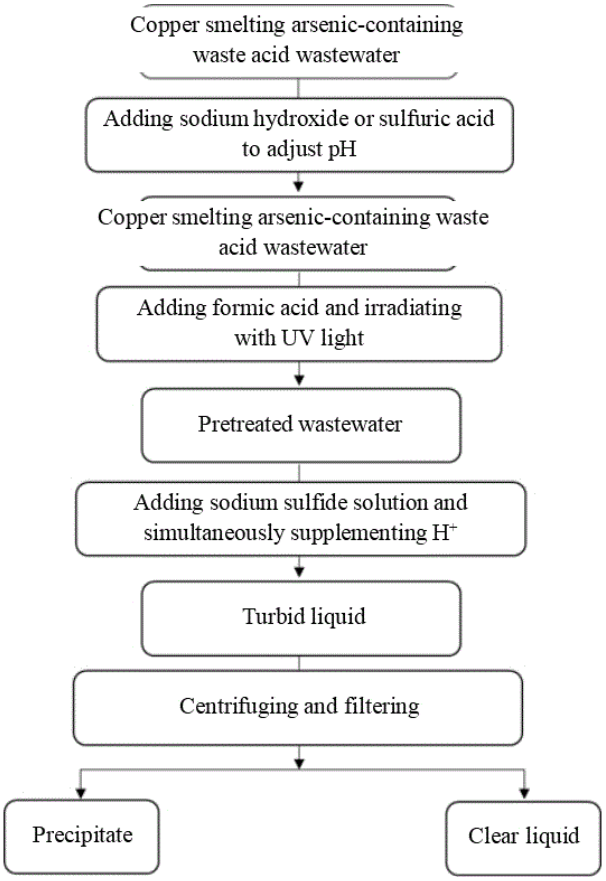

21: 2026/03778. 22: 2026/04/08. 43: 2026/11/09
51: C08L
71: Kunming University of Science and Technology
72: LIU Bingguo, RUAN Linguang, YUWEN Chao, GUO Shenghui, HOU Ming, ZHOU Junwen

54: METHOD AND DEVICE FOR COMBINED PRODUCTION OF SMOKED SHEET RUBBER USING MULTIPLE HEAT SOURCES

00: -

The present invention relates to a method and a device for combined production of smoked sheet rubber using multiple heat sources, belonging to the field of primary natural rubber processing applications. In the present invention, natural rubber sheets of 30×50 mm with a moisture content of 28-43 percent are hung in a microwave cavity and dried with 25-40 kW of microwave power for 15-25 min;

when the sheet moisture content reaches 5-10 percent, a hot air system with a power of 15-25 kW is activated, the microwave power is adjusted to 10-20 kW, and drying continues for 40-90 min; when the sheet moisture content is less than 5 percent, the hot air power, microwave power, and dehumidification fan air volume are adjusted, and simultaneously a smoke supply system is activated, blowing in 1200-2600 m3/h of smoke, and smoking is carried out for 24-48 h to obtain a qualified smoked sheet product. The present invention utilizes the selective heating and volumetric heating characteristics of microwaves, combined with a quantitative smoke supply system, to solve the problems of low efficiency, long cycle time, and product instability in traditional smoked sheet rubber production.

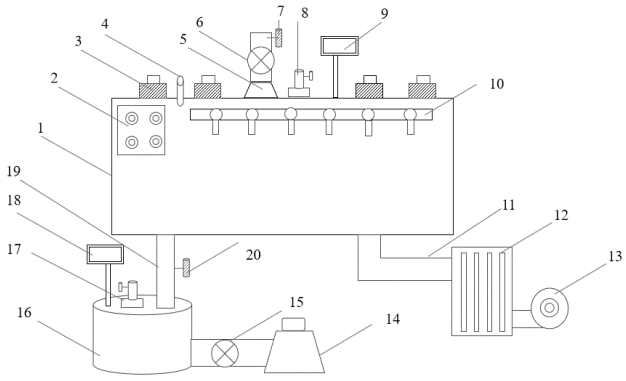

21: 2026/03779. 22: 2026/04/08. 43: 2026/11/09
51: B01J
71: Fujian Keteng Biotechnology Co., Ltd, Fuqing Keteng Industrial Co., Ltd.
72: Chuanjun Shi, Xinxing Lin, Xujian Wu, Jianfang Xue

54: A MICROCHANNEL REACTION DEVICE FOR BIO-BASED DIMERS AND HYDROGENATED HIGH-PURITY DIMERS

00: -

The present invention provides a microchannel reaction device for bio-based dimers and hydrogenated high-purity dimers, belonging to the technical field of chemical equipment. It solves the technical problems of inconvenient maintenance caused by channel blockage and poor integration reliability when existing microchannel reaction devices are used for the production of bio-based dimers and hydrogenated high-purity dimers. The microchannel reaction device for bio-based dimers and hydrogenated high-purity dimers comprises an upright frame, two guide rails fixedly connected to the front end of the upright frame, a lead screw rotatably connected below the upright frame, and a bidirectional motor for driving the lead screw. In the present invention, the lead screw drives the reaction assembly to move on the surface of the guide rails, making the connection between the reaction assembly and the upright frame flexible. Furthermore, the flexible arrangement of the reaction assembly facilitates the overall extraction of the reaction assembly from fixed pipelines and lines, thereby making it convenient for users to extract, replace, or thoroughly clean the reaction assembly when polymerization blockage occur.

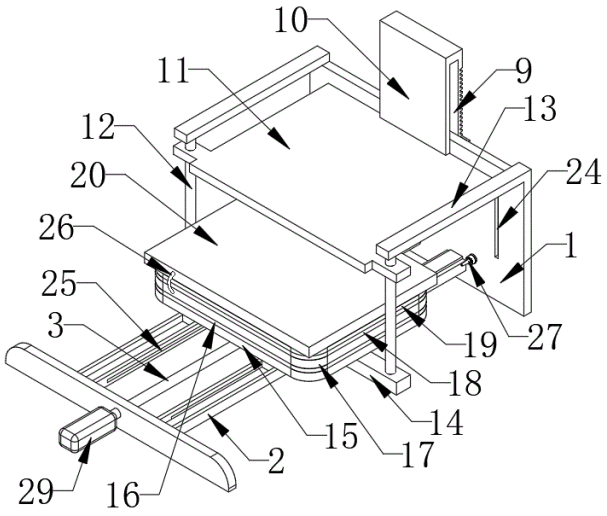

21: 2026/03780. 22: 2026/04/08. 43: 2026/11/09
51: G01V
71: Southwest Petroleum University
72: ZHAO, Feng, HUANG, Dan, HUANG, Yiwei, FU, Caiyan, ZHU, Yuanyuan

54: METHOD FOR CLASSIFYING VOLCANIC RESERVOIRS BASED ON MULTI-SOURCE DATA FUSION AND MACHINE LEARNING, AND SYSTEM

00: -

The present application discloses a method for classifying volcanic reservoirs based on multi-source data fusion and machine learning. The method includes: testing a volcanic reservoir sample by different means, and obtaining a lithofacies, a lithology, physical property parameters, pore structure parameters, and a full pore size distribution; determining a proportion of macropores; performing K-means clustering analysis on the

porosity, the permeability, and the pore structure parameters, and determining reservoir quality corresponding to each cluster, to obtain a K-means classification result; performing SHAP value analysis on the parameters participating in K-means clustering; computing a VRQI value corresponding to each cluster based on an average pore throat radius, a displacement pressure, and the proportion of macropores; determining volcanic reservoir classification and evaluation criteria when the K-means classification result is consistent with the comparison result of the VRQI values; and performing reservoir classification on a volcanic sample to be identified.

21: 2026/03781. 22: 2026/04/08. 43: 2026/11/09
51: B01D
71: Suzhou National High-tech Industrial Development Zone (Huqiu) Environmental Monitoring Station
72: Yuexiang Xu, Xin Pan, Nan Wang
54: A VOC GAS ACTIVATED CARBON PURIFICATION BOX
00: -
The present invention discloses a VOC gas activated carbon purification box, comprising a VOC gas activated carbon purification box, wherein the VOC gas activated carbon purification box comprises a purification box body, pull-out activated carbon filter plates, a pneumatic dust-settling mechanism, and a shaking-type cleaning mechanism. One end of the purification box body is provided with an air inlet, and the other end is provided with an air outlet. A plurality of groups of pull-out openings are uniformly formed in the side surface of the purification box body, and an embedded opening is formed in the top thereof. The plurality of groups of pull-out activated carbon filter plates are correspondingly inserted into the plurality of groups of pull-out openings. The pneumatic dust-settling mechanism comprises an air blower, an air guide pipe, air conduction pipes, and spray heads. The air blower is mounted on the purification box body, and the air outlet end thereof is connected to the plurality of groups of air conduction pipes through the air guide pipe. Two adjacent groups of air conduction pipes are symmetrically embedded on the inner sides of the pull-out activated carbon filter plates. The VOC gas activated carbon purification box designed in the present invention can perform pneumatic and vibration cleaning treatment on the surface of the activated carbon filter plates, and periodic automated cleaning operations improve the automation degree of the device.

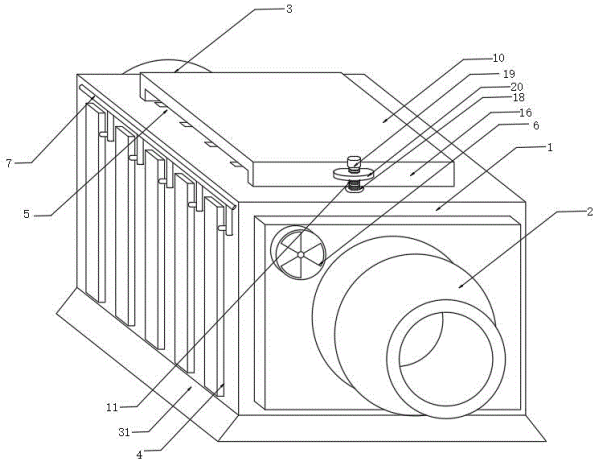

21: 2026/03782. 22: 2026/04/08. 43: 2026/11/09
51: H04R
71: Nanjing Vocational College of Information Technology
72: Siwei Zhang, Yanyu Wei, Yang Zhai
54: AUDIO POWER AMPLIFIER TESTING SYSTEM BASED ON VIRTUAL INSTRUMENT TECHNOLOGY
00: -
Disclosed is an audio power amplifier testing system based on virtual instrument technology. A testing program is designed for a software development platform by using a graphical programming language LabVIEW, to generate a digital audio signal for testing performance parameters of an audio power amplifier. The digital audio signal is converted into an analog audio signal for output through an analog output channel of a data acquisition card, to be used as an excitation signal of the audio power amplifier. After being conditioned by a signal conditioning circuit, an output signal amplified by the audio power amplifier is input to an analog input channel of the data acquisition card, converted into a digital signal, and then sent to a computer. The computer analyzes and processes the collected audio digital signal, to obtain performance parameters and frequency characteristics of a tested audio power amplifier. In this disclosure, a design concept of a virtual instrument is introduced into a hardware development solution of the audio power amplifier

testing system, and a data acquisition channel has a high throughput rate for transmitting large amounts of data and advanced timing and synchronization technology, which can meet data processing and analysis requirements on a multi-core computer system.

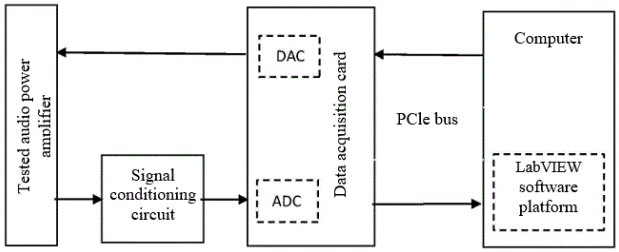

21: 2026/03783. 22: 2026/04/08. 43: 2026/11/09
51: A61M
71: Shaanxi Yungu Zhonghui Biopharmaceutical Co., Ltd.
72: YANG, Hao, LI, Ding, HU, Chaoyan, WANG, Jintao, MA, Yan
33: CN 31: 202610291822.2 32: 2026-03-09
54: MICRONEEDLE AND MICRONEEDLE ARRAY APPARATUS
00: -
Provided are a microneedle and a microneedle array apparatus. The microneedle includes a hollow needle body. The needle body is configured to be fixedly disposed on a base, so as to pierce a skin surface, an inwardly recessed fluid guide groove is disposed on an outer circumferential sidewall of the needle body, and a liquid outlet communicating an interior of the needle body with the fluid guide groove is formed in the outer circumferential sidewall of the needle body, and the fluid guide groove is able to guide a portion of injection fluid flowing out from the liquid outlet to flow along the outer circumferential sidewall of the needle body.

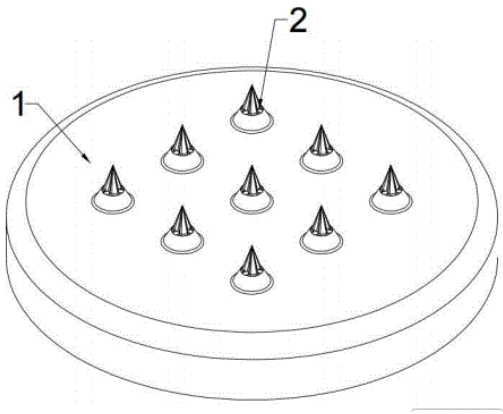

21: 2026/03784. 22: 2026/04/08. 43: 2026/11/09
51: G09B
71: XINYU UNIVERSITY
72: LIU, Zhijie, ZHAO, Yuexin, ZHANG, Jie, HE, Wei, WU, Guangsheng
54: VIRTUAL SIMULATION TRAINING PLATFORM
00: -
Disclosed is a virtual simulation training platform technology and discloses a virtual simulation training platform. The platform comprises a training platform, wherein a lifting component is arranged at a rear end of an inner cavity of the training platform, and a connecting plate and a display screen are fixedly connected to the lifting component. The lifting component drives the connecting plate and the display screen to move vertically, enabling users of different heights to adjust the display screen to an optimal viewing position and adapt to both sitting and standing training scenarios, thereby improving immersion and operational comfort. A moving component is arranged to drive an adjustment rod, which controls vertical movement of a moving plate and moving wheels. The moving wheels can be lowered for convenient movement and raised for stable operation, allowing the bottom of the platform to directly contact the ground.

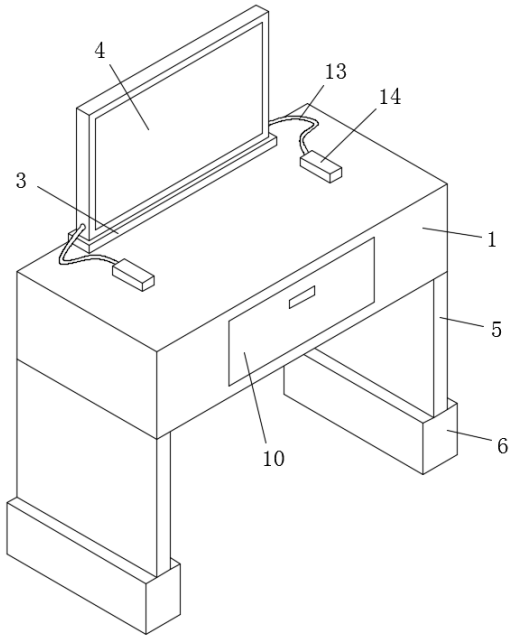

21: 2026/03787. 22: 2026/04/08. 43: 2026/11/09
51: G06Q
71: VISHWAKARMA INSTITUTE OF TECHNOLOGY
72: RATHI, Snehal Rahul, CHAVHAN, Pranali, PHADNIS, Prerna Pramod, BURANDE, Aadi Chandrakant, DESHMUKH, Rutuja Sachin, TAYADE, Yash Manish, SURATRAN, Anuj Yogesh, NADE, Yash Santosh

54: A TOURIST SAFETY MONITORING AND INCIDENT RESPONSE SYSTEM BASED ON AI, GEO-FENCING, AND BLOCKCHAIN-BASED DIGITAL IDS

00: -

The present invention is related to a tourist safety monitoring and incident response system based on AI, Geo-Fencing, and Blockchain-based Digital IDs. It creates a safe virtual environment that enrolls travelers at arrival using verifiable digital identities, tracks their location and activity in real time, and sends automatic alerts in the event of distress or abnormalities. The system integrates web/mobile interface, API Gateway with security middlewares, AI anomaly detection, blockchain recording for identity integrity, and real-time dashboards for law enforcement and tourism authorities. Optional IoT wearables improve safety in high-risk areas. The architecture preserves privacy, transparency, and incident response at speed with end-to-end encryption and blockchain immutability.

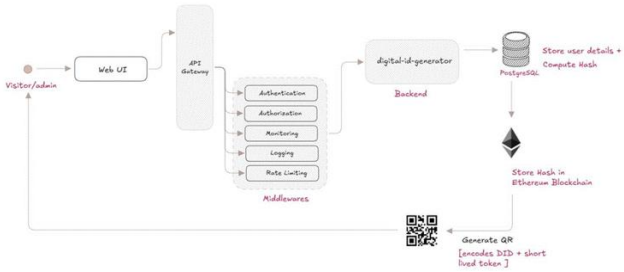

21: 2026/03788. 22: 2026/04/08. 43: 2026/11/09
51: G06F
71: VISHWAKARMA INSTITUTE OF TECHNOLOGY
72: RATHI, Snehal Rahul, WANKHED, Disha Sushant, NEJE, Tushar Sadashiv, RAUT, Mayur Hiraman, PAWA, Swaraj Rajendra, ATTAR, Amrin Sameer, KALE, Aditya Prashant, SATALKAR, Tanmay Bharat

54: A SECURE DATA WIPING SYSTEM FOR TRUSTWORTHY IT ASSET RECYCLING

00: -

The present invention is related to a secure data wiping system for trustworthy IT asset recycling. The invention provides a secure data sanitization platform addressing India's 1.75 million tons annual e-waste generation and data security concerns preventing IT asset recycling. The system implements NIST SP 800-88 compliant erasure including hidden areas (HPA/DCO and SSD sectors), generates cryptographic X.509 certificates with SHA-256 signatures as tamper-proof verification, and operates through Rust-based memory-safe architecture on Alpine Linux. The platform features cross-platform support, one-click interface, batch processing, pre-cleanup file type breakdown, and hardware-accelerated erasure using ATA/NVMe commands. The invention offers an affordable alternative to existing expensive solutions while ensuring compliance with regulatory requirements.

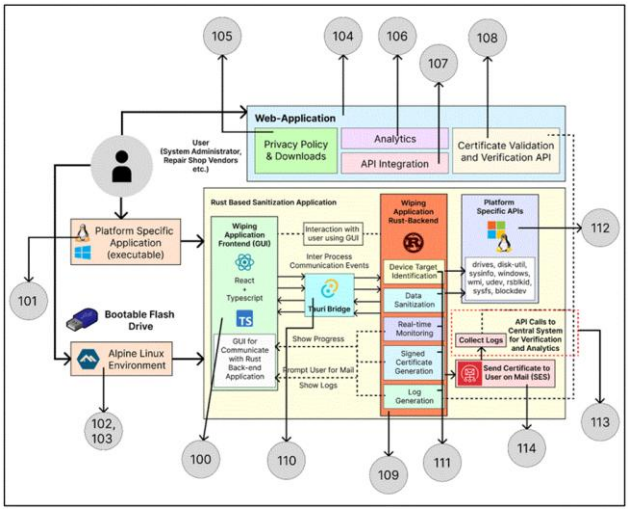

21: 2026/03789. 22: 2026/04/08. 43: 2026/11/09
51: A01G
71: Yuxi Normal University, ZHANG Yujie
72: ZHANG Yujie, GUO Yang, ZHANG Yunrong, LI Shigang

54: MULTI-CYCLE ROTATIONAL VERTICAL CULTIVATION SYSTEM AND METHOD FOR EDIBLE FUNGI

00: -

This invention provides a multi cycle rotational vertical cultivation system and method for edible fungi. The method comprises the following steps: constructing a vertical cultivation system for edible fungi, wherein cultivation racks for edible fungi are arranged within the vertical cultivation system; planting bamboo fungus or button mushrooms on the cultivation racks of the first and second layers; planting shiitake mushrooms or oyster mushrooms on the cultivation racks of the third and fourth layers; planting elm yellow mushrooms or hairy auricularia on the cultivation racks of the fifth and sixth layers; carrying out zonal control of temperature, humidity, ventilation and light intensity by layers; after harvesting, removing the substrate from the cultivation racks of the first and second layers of the vertical cultivation system for edible fungi, and replacing it with fermented waste material derived from the cultivation of the aforementioned edible fungi on the upper layers. This invention can fully utilise the waste material decomposed by lignicolous fungi to cultivate graminicolous fungi, thereby simultaneously achieving rotational multi cycle cultivation of edible fungi, and improving both the efficiency of space utilisation in cultivation and the efficiency of raw material utilisation.

21: 2026/03790. 22: 2026/04/08. 43: 2026/11/09
51: G06F
71: VISHWAKARMA INSTITUTE OF TECHNOLOGY
72: KHOJE, Prathamesh, JAGTAP, Dhananjay, GUPTA, Ayush, PATIL, Swati B., SABLE, Nilesh P.

54: A DISTRIBUTED EDGE-AWARE MLOPS SYSTEM FOR LIFECYCLE OPTIMIZATION OF MACHINE LEARNING MODELS

00: -

The present invention is related to a distributed edge-aware MLOps system for lifecycle optimization of machine learning models. The invention discloses a system that optimizes the lifecycle of machine learning models across heterogeneous resource-constrained edge devices. The framework includes a control plane for artifact management and policy control, edge runtime agents for local execution and telemetry, a resource awareness module to profile device capabilities, a model packaging pipeline to produce optimized model variants, an adaptive deployment manager to match and deploy model variants based on policies and device state, and a monitoring layer for automated rollback and retraining triggers. the framework supports secure, bandwidth-efficient updates, staged rollouts, and optional federated learning for privacy-preserving updates.

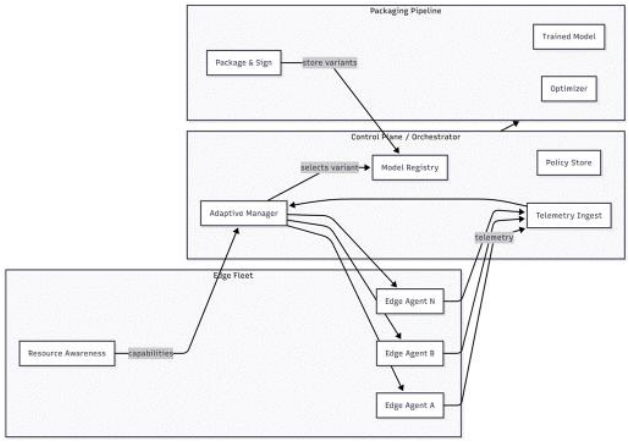

21: 2026/03791. 22: 2026/04/08. 43: 2026/11/09
51: G06N
71: VISHWAKARMA INSTITUTE OF TECHNOLOGY
72: DANI, Rugved, GANDHI, Akshat, KALE, Shashwati, PATIL, Swati B., SABLE, Nilesh P.

54: AN AUTOMATED DIABETES PREDICTION SYSTEM

00: -
The present invention is related to an automated diabetes prediction system designed to assess the likelihood of diabetes in individuals based on key health parameters including pregnancies, glucose levels, blood pressure, BMI, and age. The system employs a Random Forest Classifier trained on the Pima Indians Diabetes Dataset to provide accurate, real-time risk assessments without requiring manual intervention. The trained model is deployed through a FastAPI interface, containerized with Docker, and orchestrated using Kubernetes to ensure scalability, reliability, and seamless integration with healthcare platforms. Upon receiving patient data, the system analyzes the input, predicts the diabetes risk, and delivers automated notifications along with confidence scores, enabling timely preventive action and proactive healthcare management. This hands-free, non-intrusive solution enhances patient monitoring, reduces the workload of healthcare providers, and supports early detection of high-risk cases. The system is applicable in hospitals, clinics, telemedicine platforms, and personal health applications, offering a streamlined, real-time approach to diabetes prediction and personalized health care.

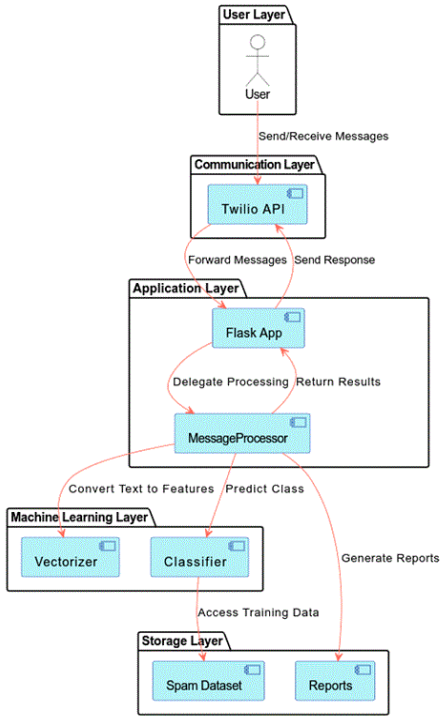

21: 2026/03792. 22: 2026/04/08. 43: 2026/11/09
51: G06N
71: VISHWAKARMA INSTITUTE OF TECHNOLOGY
72: MOHAGAONKAR, Anvay, BHANOSE, Rujuta, AGRAWAL, Krish, PRASAD, Prachee, PATIL, Swati B, SABLE, Nilesh P.

54: A SYSTEM FOR SECURE, PORTABLE AND RELIABLE DEPLOYMENT OF MACHINE LEARNING INFERENCE SERVICES VIA HARDENED ARTIFACT PATH RESOLUTION

00: -
The present invention is related to a system for secure, portable and reliable deployment of machine learning inference services via hardened artifact path resolution. The system disclosed here is for deploying trained machine learning (ML) models generated by an experiment tracking framework (MLflow) into a containerized inference service with guaranteed reliability. The system addresses critical deployment friction points specifically the volatility of model registry lookups and filesystem access denials by low-privilege production servers. The core process involves calculating and hard-coding the model's direct, physical artifact path structure (/app/mlruns/[EXP_ID]/[RUN_ID]/artifacts/model) within the application's model loading routine, effectively decoupling deployment from the registry database. Crucially, the deployment system

executes a mandatory, automated, recursive permission remediation step (RUN chmod -R a+rX mlruns) during the container build process, ensuring the non-root application server (e.g., Gunicorn) possesses the necessary read and execute permissions for the copied model files. This architecture significantly improves deployment success rates, consistency, and environment portability across diverse operational environments.

21: 2026/03793. 22: 2026/04/08. 43: 2026/11/09
51: A01G
71: VISHWAKARMA INSTITUTE OF TECHNOLOGY
72: JAGDALE, Vinit Vijay, KHANAJ, Tejas Parmanand, TEKE, Omshree Rahul, UDGAVE, Harsh Pravin, CHAVAN, Rohini, NAVGHANE, Ashwini

54: A DEEP LEARNING BASED AUTOMATED PLANT DISEASE DETECTION SYSTEM

00: -

The present invention is related to a deep learning based automated plant disease detection system. The present invention is an automated plant disease detection system utilizing a convolutional neural network (CNN) for accurate identification of crop disorders from leaf images. The system acquires an input image of a plant leaf, preprocesses the image through resizing and normalization, and classifies the disease into one of multiple predefined categories using a trained CNN model. The invention provides the predicted disease label along with an associated confidence score to support informed decision-making. The system is deployable on web and mobile platforms and is further optimized for execution on edge and low-power devices through TensorFlow Lite conversion. Additionally, the invention incorporates a feedback-based retraining mechanism that logs user-submitted field images to enhance model performance and adapt to real agricultural conditions over time.

21: 2026/03794. 22: 2026/04/08. 43: 2026/11/09
51: G06N
71: VISHWAKARMA INSTITUTE OF TECHNOLOGY
72: DAHANE, Shubham Gautam, BOKDE, Aayush Avinash, MASKE, Pandharinath Sadashiv, PATIL, Swati Bula, SABLE, Nilesh P.

54: A SELF-LEARNING, REINFORCEMENT-BASED OPTIMIZATION SYSTEM FOR MACHINE LEARNING PIPELINES

00: -

The present invention is related to a self-learning, reinforcement-based optimization system for machine learning pipelines. It automates key lifecycle stages - training, validation, retraining, and deployment by employing reinforcement learning to learn from feedback and adjust pipeline parameters autonomously. Through a continuous cycle of feedback ingestion, reward computation, and policy optimization, the system self-improves its automation logic, reducing manual oversight while enhancing accuracy, efficiency, and resilience. The invention transforms traditional MLOps pipelines into intelligent, adaptive entities, applicable across industries demanding robust and scalable AI deployment.



21: 2026/03795. 22: 2026/04/08. 43: 2026/11/09
51: G06N
71: VISHWAKARMA INSTITUTE OF TECHNOLOGY
72: GHORPADE, Isha, KHADE, Vaishnavi, PATIL, Swati, SABLE, Nilesh P.

54: AN AUTOMATED MLOPS FRAMEWORK BASED SYSTEM FOR CONTINUOUS TRAINING, EVALUATION AND DEPLOYMENT OF DIABETES PREDICTION MODELS

00: -

The present invention is related to an automated MLOps framework-based system for continuous training, evaluation and deployment of diabetes prediction models. The invention discloses an Automated Machine Learning Operations (MLOps) Framework for healthcare analytics, specifically applied to diabetes prediction. The invention automates the end-to-end lifecycle of machine learning models encompassing dataset versioning, preprocessing, model training, evaluation, retraining, and deployment. By leveraging an automated pipeline structure, this system ensures that every dataset update triggers model retraining and performance validation without manual intervention. The framework integrates continuous integration and continuous deployment (CI/CD) to streamline updates, improve model accuracy, and maintain reproducibility across multiple versions. A modular pipeline combining StandardScaler and Logistic Regression achieves efficient classification of diabetic and non-diabetic patients. Each trained model is versioned (diabetes_pipeline_v1.pkl, v2.pkl), evaluated and deployed as a REST API for real-time healthcare prediction. This invention enhances reliability, scalability and traceability in AI-driven medical diagnostics, thereby reducing manual workload, minimizing errors and ensuring consistent healthcare insights across dynamic datasets.

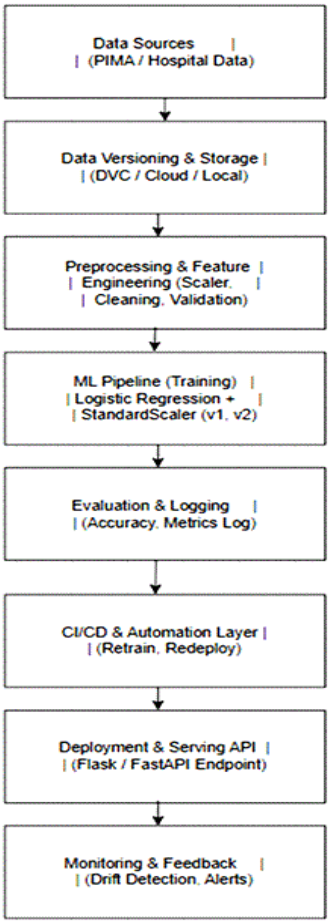

21: 2026/03796. 22: 2026/04/08. 43: 2026/11/09
51: A61P
71: VISHWAKARMA INSTITUTE OF TECHNOLOGY
72: GORDE, Supriya, KARANJE, Om Rajanish, KARAD, Sujay Govind, KANADE, Tejas Ashok, KHADE, Vishal Satish

54: AN ML DRIVEN EMOTIONAL ANALYTICS SYSTEM FOR ENHANCING EMPLOYABILITY

00: -

The present invention is related to an ML driven emotional analytics system for enhancing employability. This invention introduces a platform designed to bridge this gap by creating a personalized development companion. The methodology followed 'Holistic Sentiment Analysis', which build a dynamic user profile by integrating data from three different models: Psychometric data, which establishes personality and skill profiles; behavioral analysis, to interpret facial expressions and gestures during assessments by video capture; and conversation analysis using natural language processing by an AI chatbot analyzing a user's

expressed sentiments. This data is then used to suggest personalized learning content, career pathways, and motivational insights. Dynamic learning models include the generation of contextual quizzes from videos using a Large Language Model, while user performance and continuous behavioral analysis feed back into the profile. The invention significantly extends existing assessment tools through providing continuous sentimental or behavioral feedback that adapts to the changing state of a user. This makes a novel contribution in the form of a human-centric AI model for personal development that could enhance users' motivation and employability within a rapidly changing professional landscape.

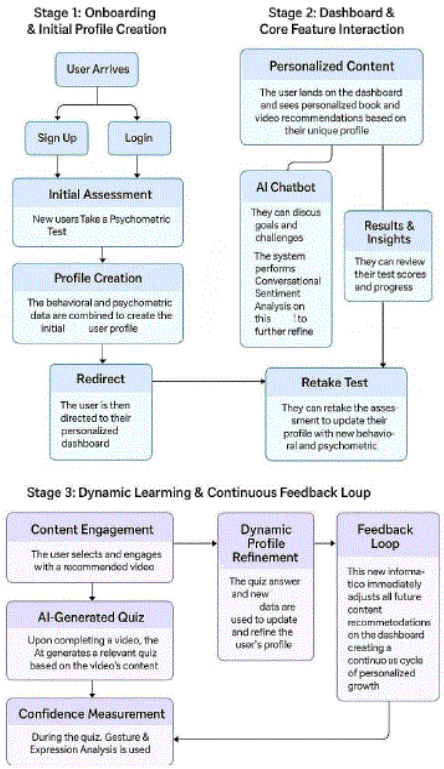

21: 2026/03797. 22: 2026/04/08. 43: 2026/11/09
51: G06Q
71: VISHWAKARMA INSTITUTE OF TECHNOLOGY
72: MARADE, Mayuresh Bhausaheb, SHINDE, Omkar Dilip, SAWANT, Rugved Tanaji, CHAVAN, Ninad Atul, JAGTAP, Sahil Sachin, PATIL, Swati Bula, SABLE, Nilesh P.

54: AN INTEGRATED SYSTEM FOR SECURE AGRICULTURAL CONTRACTING AND ESCROW-BASED PAYMENTS

00: -

The present invention is related to an integrated system for secure agricultural contracting and escrow-based payments. This innovation offers an integrated software system designed to secure and automate agricultural commerce using digital contracts and an automated escrow mechanism. The core concept is to provide farmers, buyers, and agri-input suppliers with a single, trusted platform to create verifiable digital contracts, secure transaction funds in an escrow account, and automatically trigger payment release based on real-world, verifiable milestones such as confirmed delivery and third-party quality certification. This system directly addresses the critical issues of counterparty risk and payment defaults in the agricultural supply chain, thereby improving efficiency, transparency, and financial security, particularly for small and marginal farmers.

21: 2026/03798. 22: 2026/04/08. 43: 2026/11/09
51: G06Q
71: VISHWAKARMA INSTITUTE OF TECHNOLOGY
72: GORDE, Supriya Shankarrao, JAIN, Ronit Vijaykumar, ITKIKAR, Sharayu Abhijit, AGEY, Atharva Shripad, JAIN, Harshit Abhay, BIRLE, Shweta Ankush

54: AN AI AND IOT-ENABLED AUTONOMOUS SMART TROLLEY SYSTEM FOR RETAIL AUTOMATION

00: -

The present invention is related to an AI and IoT-enabled autonomous smart trolley system for retail automation. The smart trolley system is an advanced shopping trolley that integrates hardware and software to make retail shopping automated. It consists of a barcode or QR scanner for product identification, a touchscreen display for billing and product information, optical sensors to detect items placed inside, a weight sensor at the base for cross-checking items, and a camera module that uses AI to verify products visually. A microcontroller or Raspberry Pi acts as the main control unit, coordinating all components and connecting to the store’s database via Wi-Fi. When a customer scans a product, its details such as name, price, and availability appear on the display. If someone places a product without scanning, the sensors or camera instantly detect it and alert the user. Once shopping

is done, the trolley generates a QR code for payment, and the final verification at the exit ensures that the billed weight matches the physical items. The system is portable, user-friendly, and can be implemented in supermarkets or retail stores to make shopping smart, secure, and hassle-free.

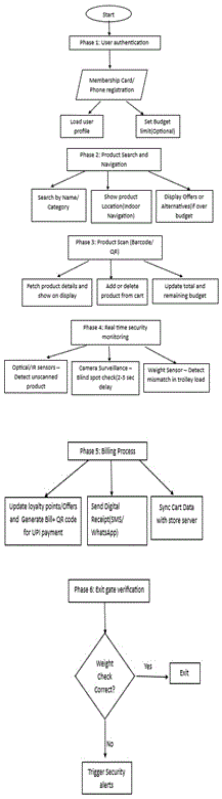

21: 2026/03799. 22: 2026/04/08. 43: 2026/11/09
51: G06Q
71: VISHWAKARMA INSTITUTE OF TECHNOLOGY
72: GOYANKA, Ansh Vinitkumar, KAIRAMKONDA, Parth Santosh, SHAH, Neel Umesh, PATIL, Swati B., SABLE, Nilesh P.

54: AN END-TO-END MLOPS-BASED DIAMOND PRICE PREDICTION SYSTEM USING ENSEMBLE REGRESSION AND AUTOMATED DEPLOYMENT FRAMEWORK

00: -

The present invention is related to an end-to-end MLOps-based diamond price prediction system using ensemble regression and automated deployment framework. The invention discloses a system for end-to-end diamond price prediction using ensemble regression within an MLOps framework. The system automates data preprocessing, model training, evaluation, and deployment through an integrated pipeline managed by DVC, MLflow, and Airflow. It achieves reproducible experimentation, version control, and scalable deployment via containerization and CI/CD workflows. By employing ensemble learning and automated monitoring, the invention provides a sustainable, accurate, and transparent solution for predictive analytics applications.

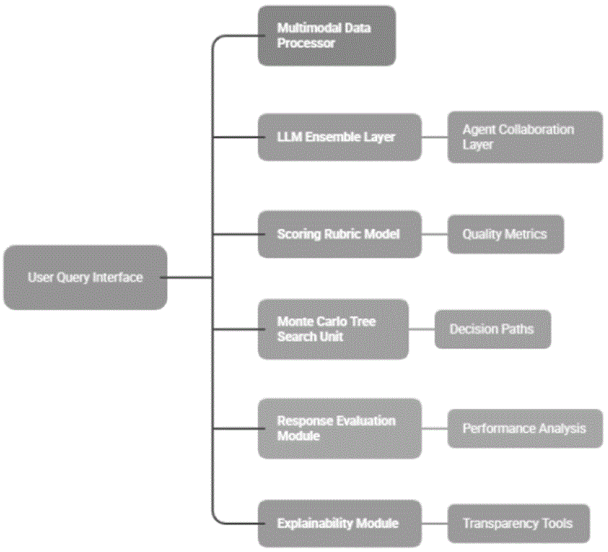

21: 2026/03800. 22: 2026/04/08. 43: 2026/11/09
51: G06N
71: VISHWAKARMA INSTITUTE OF TECHNOLOGY
72: HARNE, Pranay, YEMUL, Arya, GODBOLE, Sejal, GAVALI, Yash, PATIL, Swati B., SABLE, Nilesh P.

54: A SYSTEM FOR UNIFIED MACHINE LEARNING MODEL MANAGEMENT AND EXPERIMENT TRACKING

00: -

The present invention is related to a system for unified machine learning model management and experiment tracking. The invention offered lifecycle management system of machine learning models. The invention resolves reproducibility and governance issues in machine learning building with an integrated workflow. The system tracks experiment parameters, performance, and model artifacts automatically to a centralized tracking server as the model is trained. The resulting model artifact is then registered in a versioned model registry. The combined process enables systematic tracking of experiments, model performance

comparison, and version control of models to be released, ensuring a reproducible and trackable machine learning pipeline.

21: 2026/03801. 22: 2026/04/08. 43: 2026/11/09
51: G06Q
71: VISHWAKARMA INSTITUTE OF TECHNOLOGY
72: DHAGE, Pratik, MOHANTY, Aditee, JADHAV, Vyankatesh, PATIL, Swati, SABLE, Nilesh P.

54: A MULTI AGENT FINANCIAL ANALYSIS SYSTEM WITH REPORT GENERATION AND INTERACTIVE VISUALIZATION

00: -

The present invention is related to a multi-agent financial analysis system with report generation, and interactive visualization. A computer-implemented system orchestrates domain-specific analytical agents to transform financial inputs into canonical reports comprising narrative sections, tables, and visualization payloads. Each report is encrypted using a session-scoped symmetric authenticated cipher and stored in remote object storage with integrity and provenance metadata. Upon authenticated, in-session requests, the system retrieves and decrypts the artifact and renders it as interactive components in a web application. A conversational module provides grounded question-answering over the same decrypted-in-session content. The architecture combines deterministic, auditable generation with encrypted-by-default storage and session-bound access to deliver secure, reproducible financial analytics for CA, ITR, and equity domains.

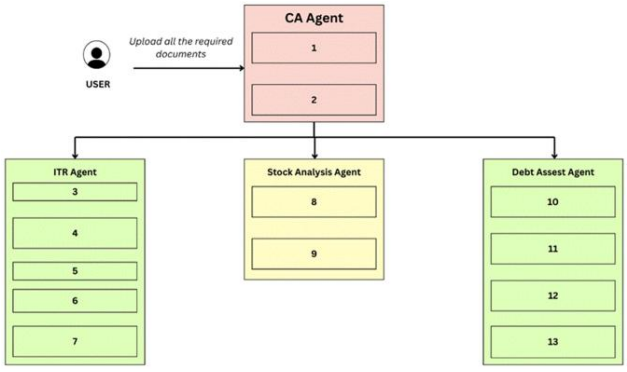

21: 2026/03804. 22: 2026/04/08. 43: 2026/11/09
51: C12N
71: FERTIS INDIA PVT. LTD.
72: KANUMURU, Rahul Raju
33: IN 31: 202341018195 32: 2023-09-17

54: PROCESS FOR PREPARTION OF TAGATOSE FROM BIOMASS

00: -

The present invention relates to a process for preparation of tagatose from sugars derived from biomass or any carbohydrate source. The invention includes the methods of Tagatose production using series of enzymes for conversion biomass such as and not limited to Starch, maltose, maltodextrin, cellulose, sucrose from juice and monosaccharide sugar such as and not limited to Glucose and/ or fructose, etc. The invention also focuses on application of enzymes in alone and/ or in fusion with enzyme(s) involved in sequential step, for the economical, efficient conversion of biomass sugars to Tagatose.

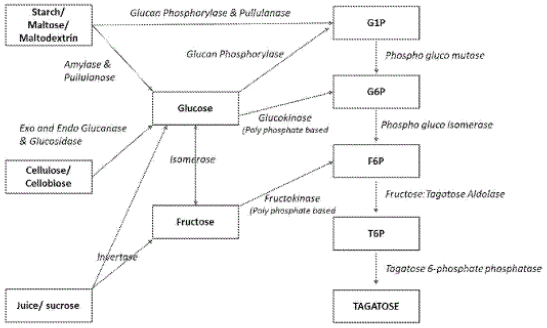

21: 2026/03806. 22: 2026/04/08. 43: 2026/11/09
51: C12N
71: FERTIS INDIA PVT. LTD.
72: KANUMURU, Rahul Raju
33: IN 31: 202341016651 32: 2023-09-13

54: GENE EXPRESSION CONTROL USING GUANIDINE BASED GENE INDUCTION

00: -

The present invention provides process for gene expression control in genetically 5 engineered organisms using inducer compounds. The present invention further relates to genetic modifications of microbes for development of efficient gene control mechanism by using natural and/ or non-natural inducer compounds such as carbon compounds and/ or nitrogen compounds like sugars, sugar analogues, nucleotides, etc. The invention also describes the gene expression control and 10 tuning by application of unique, natural compound Guanidine, either alone or in combination with other

inducer compounds, for efficient gene expression control.

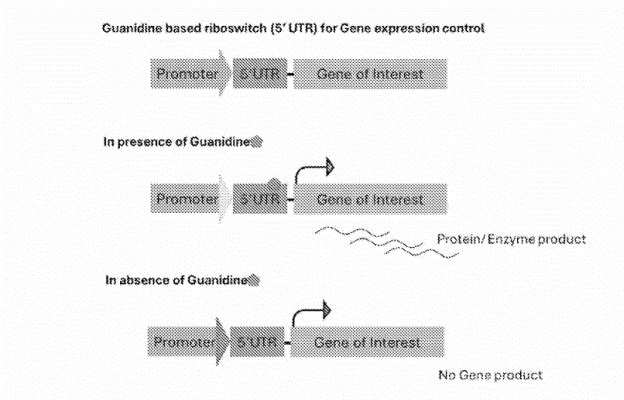

21: 2026/03834. 22: 2026/04/09. 43: 2026/11/10
51: F23M
71: Huadian Yili Coal and Power Co., Ltd.
72: Peng Zhou, Yao Wu, Shuai Ma
54: DIVERSION-TYPE ANTI-HIGH-TEMPERATURE ANTI-COKING BOILER FURNACE BODY STRUCTURE
00: -
A diversion-type anti-high-temperature anti-coking boiler furnace body structure, comprising a boiler furnace chamber body, a burner assembly, a main combustion zone swirling flow diversion assembly, a water wall circumferential diversion air distribution assembly, a furnace top diversion combustion stabilization assembly, a staged air distribution interlocking adjustment unit, and a wall surface condition monitoring unit; the burner assembly is arranged in a tangential firing pattern in a main combustion zone of a furnace chamber, the main combustion zone swirling flow diversion assembly surrounds and corresponds one-to-one with burner nozzles, the water wall circumferential diversion air distribution assembly is arranged on a water wall in a layered closed-loop manner; according to the invention, through a dual diversion structure of “internal swirling flow mixing + external steady flow confinement”, combined with a water wall-adhering oxidizing air curtain and closed-loop monitoring and adjustment under all operating conditions, coking causes such as flame wall adhesion and a local reducing atmosphere are eliminated at the source; the invention is suitable for combustion of high-sodium high-calcium bituminous coal, effectively solves the problems of furnace chamber coking and wall surface overtemperature, and improves the safety and economy of boiler operation.

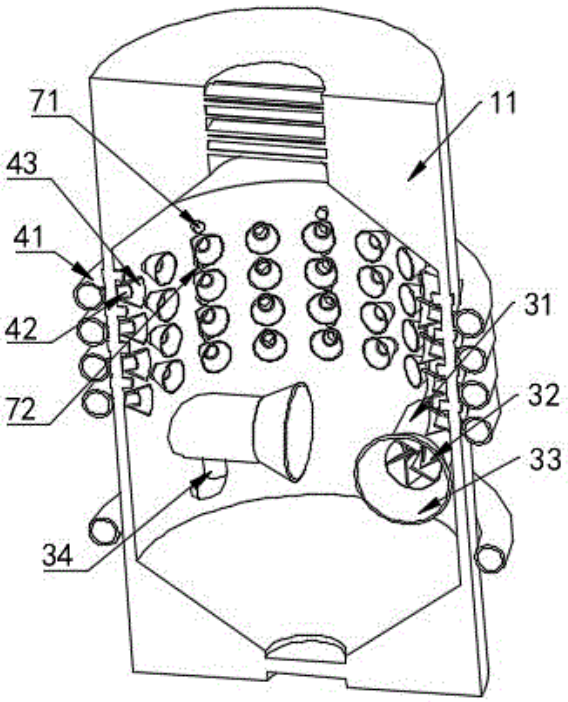

21: 2026/03836. 22: 2026/04/09. 43: 2026/11/10
51: A47C
71: Shanghai Pinxing Medical Equipment Co., Ltd.
72: Qian Pinxing, Qian Shanshan
54: FOLDING BED
00: -
This application provides a folding bed, comprising: a support beam module, a support leg module, and a bed frame module; the support beam module includes a fixing head, and the fixing head is mounted on the bed frame module; the support leg module includes a slot, and the slot is configured to receive the fixing head when the support leg module is folded. The folding bed provided in the embodiments of the present application achieves folding and unfolding of the folding bed through the support beam module, the support leg module, the bed frame module, and the like, resulting in a small occupied space when the folding bed is folded, while also facilitating easy unfolding of the folding bed. When the folding bed provided in the embodiments of the present application is applied to emergency rescue, it can maximize adaptability to medical

staff's usage and improve patients' comfort, thereby enhancing rescue efficiency

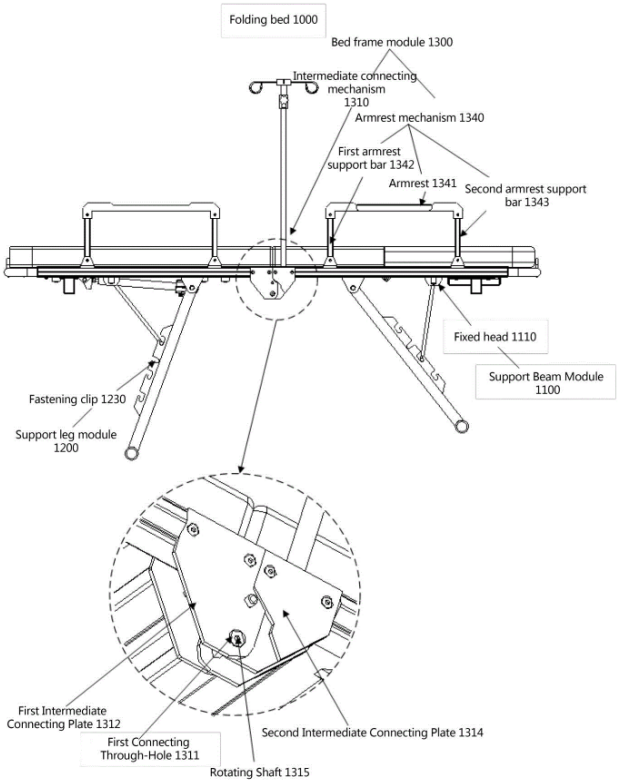

21: 2026/03837. 22: 2026/04/09. 43: 2026/11/10
51: A01C
71: HEBEI AGRICULTURAL UNIVERSITY, Institute of Crop Sciences,Chinese Academy of Agricultural Sciences, Hebei Academy of Agricultural and Forestry Sciences Dryland Agriculture Research Institute, CangZhou Academy of Agriculture and Forestry Sciences
72: LIU Hongquan, WANG Xiaoling, GAO Huiyan, GAO Tongguo, WANG Fushun, CHEN Renqiang, FENG Lijun, ZHANG Liyong, WANG Xinxin, LIANG Sutao, WANG Junhao, HAN Zhaoqi, MIAO Yibing, CHEN Jichuan, YANG Tao, DANG Hongkai, LIU Zhen
54: INTELLIGENT WATER AND FERTILIZER IRRIGATION SYSTEM AND IRRIGATION DEVICE THEREOF
00: -
The invention relates to the technical field of irrigation, in particular to an intelligent water and fertilizer irrigation system and an irrigation device thereof. The intelligent water and fertilizer irrigation system integrally includes a water and fertilizer integration module, a movement module, an environment detection module, a soil detection module and a simulation module. The movement device includes a bottom plate, a groove is formed in the inner side of the bottom plate, multiple first connecting plates distributed in an array are arranged on the surface of one side of the bottom plate, a first rotating shaft connected in a rotating mode is arranged inside each first connecting plate, a roller fixedly connected is arranged on the outer vertical surface of each first rotating shaft, a hollow groove is formed in the surface, close to one side, of the bottom plate, symmetrically distributed connecting columns are arranged at one end of the bottom plate, and the connecting columns are fixedly connected with the bottom plate. According to the invention, the irrigation height can be adjusted according to the growth height of crops through the movable irrigation device, the irrigation nozzles can move left and right and back and forth to irrigate in multiple directions, and automatic irrigation and fertilization of the whole irrigation area are realized.

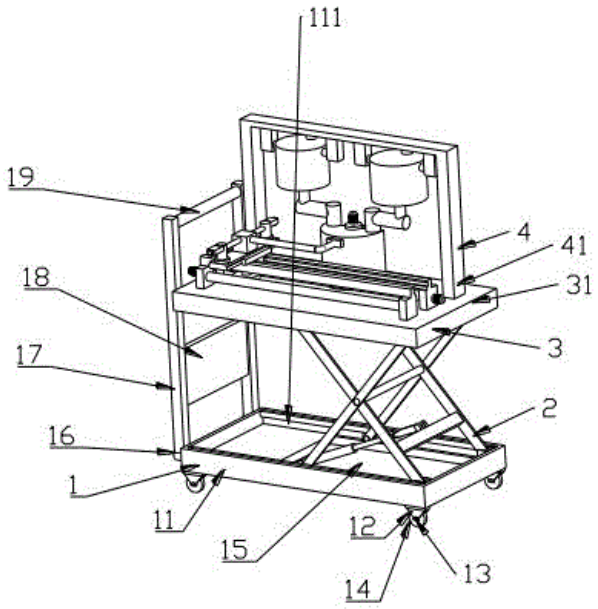

21: 2026/03839. 22: 2026/04/09. 43: 2026/11/10
51: A01B
71: HEBEI AGRICULTURAL UNIVERSITY, Shanxi Agricultural University, CangZhou Academy of Agriculture and Forestry Sciences, Hebei Runtian Water Saving Equipment Co., Ltd, Hebei Silicon Valley Fertilizer Co., Ltd
72: LIU Hongquan, GAO Tongguo, WANG Xiaoling, WANG Fushun, GAO Huiyan, CHEN Renqiang, ZHANG Liyong, CHAI Chunling, ZHEN Mingtao, LI

Yihui, YANG Tongyu, LI Zicheng, ZHANG Zeyan, LIU Zhen, WANG Yonggang, SONG Furu

54: SEEDING AND FERTILIZING INTEGRATED DEVICE AND METHOD

00: -

The present invention relates to the technical field of agricultural seeding, and in particular to an agricultural planting seeding and fertilizing integrated device and a using method thereof. During fertilization, the device can flexibly adjust a size of a feed inlet of a fertilizer discharger according to different soil fertilities of different plots, thereby adjusting a fertilization amount. Meanwhile, an adjusting block can perform lateral vibration along with vibration during operation of agricultural machinery, driving an elastic rope to vibrate, effectively preventing fertilizer from adhering and accumulating inside a fertilizer barrel, thereby improving a fertilization effect. During precision seeding, a guide rod can be used to monitor whether a seed is present in a seeding groove; when no seed is present in the seeding groove, the guide rod moves downward, driving a seed replenishing wheel to rotate a half turn, thereby completing seed replenishment, effectively preventing missed seeding and improving quality of precision seeding.

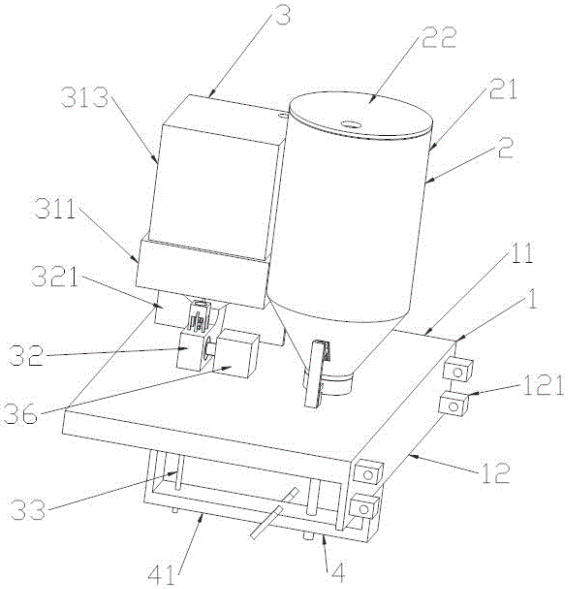

21: 2026/03840. 22: 2026/04/09. 43: 2026/11/10
51: G06F
71: Yucheng WANG
72: Yucheng WANG

54: AI-BASED METHOD AND SYSTEM FOR HYDROGEOLOGICAL, ENGINEERING AND ENVIRONMENTAL GEOLOGICAL PROFILE ANALYSIS

00: -

The present invention relates to the technical field of geological survey, and discloses an AI-based method and system for hydrogeological, engineering and environmental geological profile analysis, comprising the following steps: acquiring multi-source geological survey data to establish a computational domain mesh and initial reference configuration, assigning initial physical properties; inputting the spatiotemporal variable matrix into a physics-embedded dual-tensor orthogonal decoupling neural network, independently outputting the kinematic deformation gradient tensor field and the exogenous surface mass transfer tensor mask field through parallel output branches; monitoring spatial elevation and hydrodynamic potential energy, activating the mask field evolution equation when the dynamic erosion datum is exceeded, and updating the apparent lithological density in combination with the Jacobian determinant; constructing a total loss function with data fidelity, mechanical coordination, and topological continuity constraints to optimize network parameters; calculating permeability and shear strength distributions based on the converged tensor field, and generating profile images. The present invention realizes decoupled computation of geo-mechanical deformation and mass transfer processes, effectively prevents mesh self-intersection, and improves the physical accuracy of profile analysis.

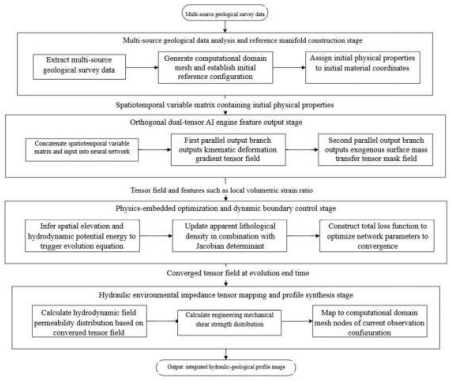

21: 2026/03842. 22: 2026/04/09. 43: 2026/11/10
51: G01S

71: Air Force Engineering University of the People's Liberation Army
72: Gong Jian, Wang Chunyang, Guo Yiduo, Feng Cunqian, Wang Huan, Yuan Hui, Song Baojun, Xiao Yu

54: A METHOD AND DEVICE FOR SEPARATING RADAR TARGETS AND INTERFERENCE SIGNALS BASED ON POLARIZATION EXTENSION AND BLIND SEPARATION

00: -

This application provides a radar target and interference signal separation method and device based on polarization extension and blind separation, comprising: receiving observation signals; Among them, the observation signal includes the target signal and the interference signal, and the observation signal is a single channel signal; Expand the single channel signal into a dual channel signal using polarization channels; Use blind separation algorithm to separate the target signal from the dual channel signal. Therefore, for observation signals including interference signals, the single channel signal is first extended to a dual channel signal through polarization channel extension, and then the target signal and interference signal are separated from the observation signal using blind separation algorithm to suppress the interference signal and discover the target signal in the presence of the interference signal.

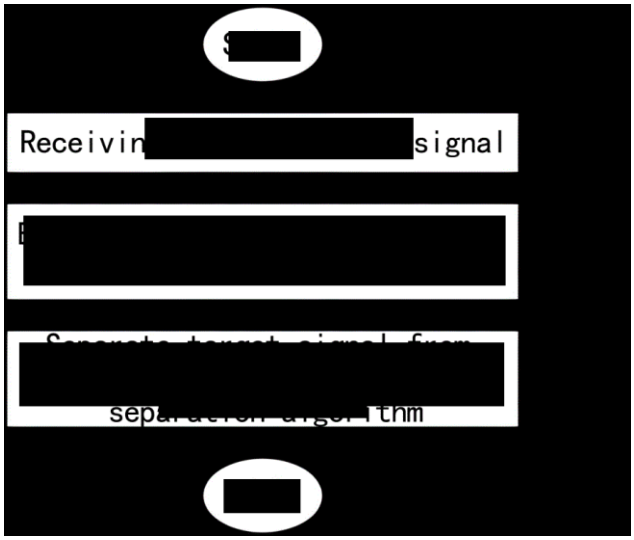

21: 2026/03847. 22: 2026/04/09. 43: 2026/11/10
51: G08G
71: VISHWAKARMA INSTITUTE OF TECHNOLOGY

72: AGRAWAL, Krish Anurag, BHANOSE, Rujuta Rahul, JOGLEKAR, Niranjan Manish, BODKE, Partha Ashish, PATIL, Swati Bula, BHANGALE, Dev Dipak, SABLE, Nilesh P.

54: A SYSTEM FOR AUTOMATED VEHICLE CLASS VERIFICATION AT TOLL PLAZAS

00: -

The present invention is related to a system for automated vehicle class verification at toll plazas. The current process relies on slow and error-prone manual verification of FASTag data. This invention utilizes an image acquisition device and a processing unit hosting a custom-trained YOLOv10 model for vehicle classification and a separate model for Automatic Number Plate Recognition (ANPR). The system captures an image of a vehicle, determines its class and number plate using the AI models, and compares this data with the vehicle's FASTag information. This automated verification process eliminates the need for human operators, increases the speed and accuracy of toll collection, and prevents revenue loss due to mismatches or fraud.

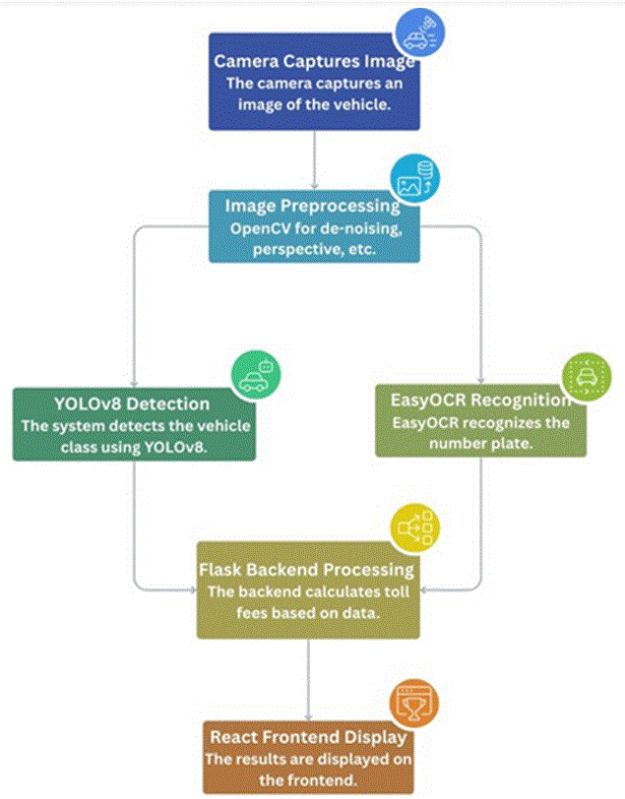

21: 2026/03848. 22: 2026/04/09. 43: 2026/11/10
51: G06Q

71: VISHWAKARMA INSTITUTE OF TECHNOLOGY
72: KULKARNI, Makrand Sushant, PESHVE, Chinmay Vivek, PANDOH, Achlesh, GUJARE, Soham Manoj, MIRAJKAR, Riddhi R., BHOITE, Sonali P., BHIMANPALLEWAR, Ratnmala N.

54: A FULL-STACK AI-ENABLED BAKERY ORDERING SYSTEM

00: -

The present invention is related to a full-stack AI-enabled bakery ordering system. The invention pertains to an online bakery marketplace with multiple vendors that is powered by AI, making cake ordering easier and empowering local vendors. The system, which combines clients, vendors, and administrators in a safe, expandable ecosystem, is based on React (frontend), Node.js with Express.js (backend), and MongoDB (database). A system for personalized designs, real-time vendor dashboards, administrator oversight, and AI-powered personalization are some of the features. The invention gives community-based bakeries convenience, transparency, scalability, and an improved online presence by addressing the drawbacks of conventional bakery ordering systems.

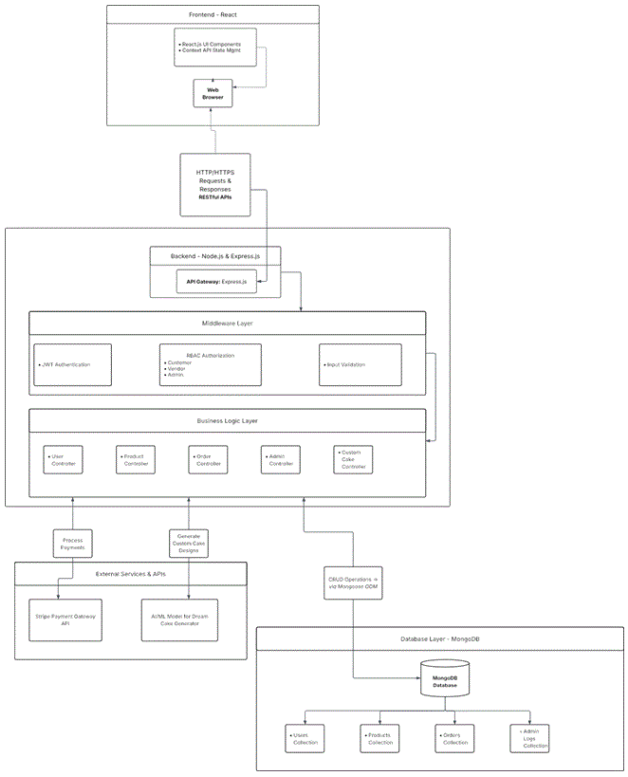

21: 2026/03849. 22: 2026/04/09. 43: 2026/11/10

51: G06N
71: VISHWAKARMA INSTITUTE OF TECHNOLOGY
72: GUDGILLA, Palak, BHAU, Anjali, UMBRAJKAR, Shweta, RAWAL, Tanvi S., DESHMUKH, Gopal B., MAHALLE, Parikshit N., TAKALE, Dattatray

54: AN MQ-6 SENSOR AND ESP-01S MODULE BASED GAS LEAK DETECTION AND ALERT SYSTEM

00: -

The present invention is related to an MQ-6 sensor and ESP-01S module-based gas leak detection and alert system. The system presents an intelligent and cost-effective LPG gas leakage detection and alert system designed to enhance safety in domestic and small-scale commercial environments. The system constantly observes and detects the presence of LPG in the surroundings through the MQ-6 sensor. When gas concentration exceeds a predefined threshold, the system triggers a buzzer for immediate local alert and uses the ESP-01S Wi-Fi module to send real-time notifications wirelessly to the user. Through integration with the Blynk app, users also receive instant push notifications on their smartphones, enabling remote monitoring and prompt action, even when they are away from the site. The entire setup is controlled by an Arduino Uno microcontroller, ensuring precise and efficient operation. A rechargeable power supply using the TP4056 module enables the system to function even during power outages, offering portability and reliability. Unlike traditional detectors, this system combines embedded technology with IoT capabilities to deliver smart, proactive safety monitoring. Its compact design, wireless alert system, and affordability make it highly suitable for kitchens, food trucks, storage rooms, and other LPG-utilizing areas. This system aims to reduce the risk of fire-related accidents by providing early warnings and allowing timely human intervention.

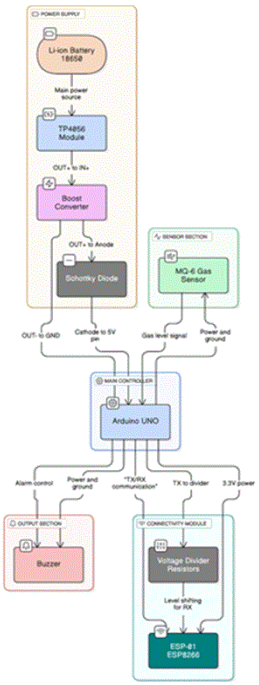

21: 2026/03850. 22: 2026/04/09. 43: 2026/11/10
51: G06Q
71: VISHWAKARMA INSTITUTE OF TECHNOLOGY
72: JAISINGPURE, Harsh, PATIL, Swati B., SABLE, Nilesh P.

54: AN MLOPS-DRIVEN RETAIL SALES FORECASTING SYSTEM USING MLFLOW AND STREAMLIT

00: -

The present invention is related to an MLOps-Driven Retail Sales Forecasting System using MLflow and Streamlit. The invention provides a comprehensive retail sales forecasting system that applies machine learning and MLOps for predictive accuracy and operational automation. It integrates MLflow for experiment tracking and model management with Streamlit for front-end accessibility, delivering real-time sales predictions based on current stock and price data. The architecture promotes scalability, transparency, and hands-free deployment, marking a transition from static analytical tools to fully automated, intelligent forecasting systems for the retail industry.

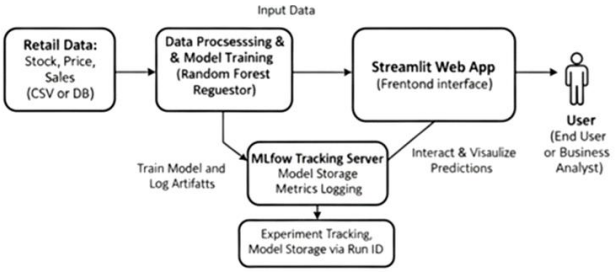

21: 2026/03851. 22: 2026/04/09. 43: 2026/11/10
51: G06N
71: VISHWAKARMA INSTITUTE OF TECHNOLOGY
72: YELWANDE, Snehal Laxmikant, MUKHERJEE, Anuja Ajay, PATIL, Tushar Sunil, PATIL, Swati B., SABLE, Nilesh P.

54: AN AUTO-CONTAINERIZATION SYSTEM FOR MACHINE LEARNING MODELS

00: -

The present invention is related to an auto-containerization system for machine learning models. The invention introduces an Auto-Containerization Framework (ACF) that automates the packaging, optimization, and deployment of machine learning models. The system analyzes model dependencies, dynamically generates optimized container definitions, benchmarks performance, and pushes containers to registries without human intervention. By integrating intelligent dependency resolution, profiling, and multi-platform deployment, this invention eliminates manual effort, reduces deployment time, and ensures consistency across MLOps environments. It represents a major step forward in scalable and automated ML model deployment.

21: 2026/03852. 22: 2026/04/09. 43: 2026/11/10
51: G06N
71: VISHWAKARMA INSTITUTE OF TECHNOLOGY
72: KHAIRNAR, Shlok Pankaj, GORE, Shirdhar Ganesh, PATIL, Swati B, SABLE, Nilesh P.

54: A CLOUD-DEPLOYED AND MLOPS-MANAGED ENSEMBLE AI SYSTEM FOR HOSPITAL AND TELEMEDICINE INTEGRATION

00: -

The present invention is related to a cloud-deployed and MLOps-managed ensemble AI system for hospital and telemedicine integration. The invention discloses a system for ensemble medical AI decision support utilizing Monte Carlo Tree Search (MCTS)

integrated with a comprehensive MLOps framework. The invention dynamically aggregates outputs from multiple large language models (LLMs) and multimodal AI agents using a scoring rubric guided by MCTS simulations. A full MLOps lifecycle enables model versioning, monitoring, retraining, and deployment, ensuring sustainable accuracy and transparency in clinical environments. The system delivers explainable, multimodal, and continuously improving healthcare AI recommendations deployable across hospitals, telemedicine, and diagnostic platforms.

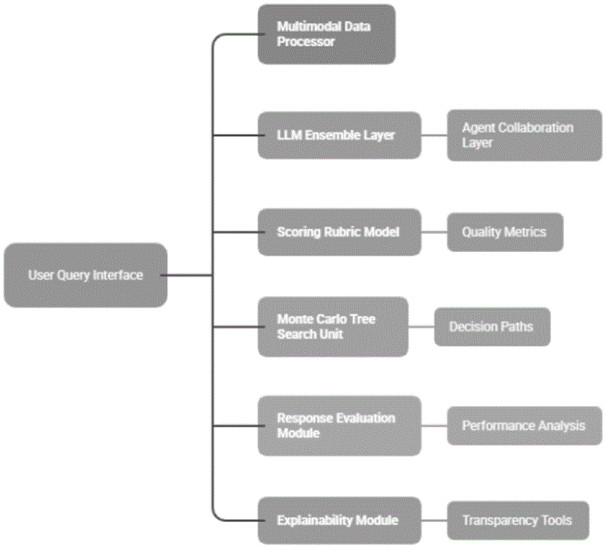

21: 2026/03853. 22: 2026/04/09. 43: 2026/11/10
51: G06F
71: VISHWAKARMA INSTITUTE OF TECHNOLOGY
72: WANGIKAR, Shivam Shailesh, YADAV, Gaurav Mangesh, BHAGWAT, Sahil Chandrashekhar, LEMBHE, Vedant, PATIL, Swati Bula, SABLE, Nilesh P.

54: A FEDERATED LEARNING-BASED WILDLIFE MONITORING SYSTEM

00: -

The present invention is related to a federated learning-based wildlife monitoring system. An MLOps architecture using Wandb as their centric element, which measures federated learning pipelines in wildlife poaching detection. The system records round-wise metrics, artificial orchestrates hyperparameter sweeps, deals with model and dataset artifacts and offers governance features (alerts, dashboards) and enforces privacy-preserving upload schemas and artifact provenance to make them auditable.

21: 2026/03854. 22: 2026/04/09. 43: 2026/11/10
51: G06F
71: VISHWAKARMA INSTITUTE OF TECHNOLOGY
72: KOTHAWADE, Sakshi Prashant, SHARMA, Annany Vikesh, PATIL, Renuka Arun, PATIL, Swati B., SABLE, Nilesh P.

54: A COMPREHENSIVE SYSTEM OF MLOPS EMBEDDED WITH ZENML AND MLFLOW FOR END-TO-END MANAGEMENT AND DEPLOYMENT OF MACHINE LEARNING MODELS

00: -

The present invention is related to a comprehensive system of MLOps embedded with ZenML and MLflow for end-to-end management and deployment of machine learning models. The impossibility to securely, adaptively, and efficiently administer machine learning model lifecycles has now emerged as one of the greatest challenges as the data-driven systems in the contemporary industries grow at a very fast pace. The invention proposes a centralized, automation system, which is based on MLOps and is integrated with ZenML and MLflow to coordinate, observe, and control the end-to-end lifecycle of ML models, including the data ingestion, preprocessing, and training processes, as well as model evaluation, versioning, and deployment, with limited human intervention. The system offers a single system where model versions are automatically registered and tracked, artifacts are stored, experiments are managed, and updated models are deployed depending on performance metrics. It is able to do so through the use of secure version control, automated feedback loops, and reproducible pipelines, which guarantee cluster-independent and predictable model behavior. The framework can independently re-train or roll back models through live monitoring metrics tracking and through drift detection, which ensures system accuracy and security.

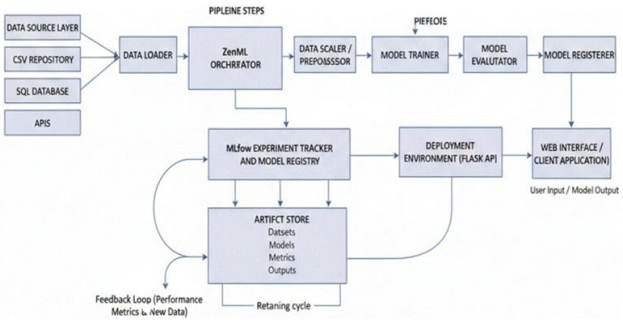

21: 2026/03855. 22: 2026/04/09. 43: 2026/11/10
51: E01H
71: VISHWAKARMA INSTITUTE OF TECHNOLOGY
72: MESHRAM, Vishal Ambadas, BACHAL, Vedant Nitin, BARGE, Viraj Vilas, BARI, Prathamesh Rajendra, MESHRAM, Vidula Vishal, SHINDE, Sandip Ramrao, AMBHORE, Nitin Hiraman, CHAVHAN, Pranali Gajanan

54: A ROBOTIC BEACH CLEANER SYSTEM FOR COASTAL WASTE MANAGEMENT

00: -

The present invention is related to a robotic beach cleaner system for coastal waste management. The invention relates to a robotic system designed for the automated collection and disposal of waste on sandy coastal terrains. The system comprises a modular chassis mounted on pneumatic wheels that ensure stable mobility on uneven sandy surfaces. A front-mounted rotating drum loosens and collects surface and partially buried debris, which is transferred via a synchronized conveyor belt to a detachable storage bin. The robot is powered by a rechargeable battery pack and driven by DC motors controlled through an onboard electronic circuit. The design emphasizes low-cost, eco-friendly construction materials and is structured for easy maintenance and scalability. Optional integrations include microcontrollers, sensors (IR/ultrasonic), GPS navigation, and solar charging modules for semi-autonomous or autonomous operation. The system provides a sustainable and efficient alternative to manual beach cleaning, promoting large-scale environmental conservation and efficient waste management along coastal regions.

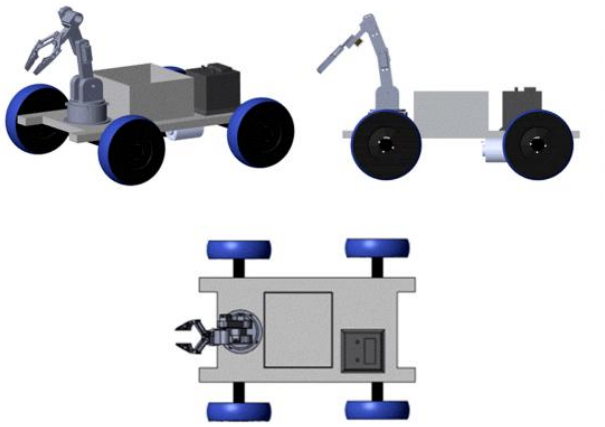

21: 2026/03856. 22: 2026/04/09. 43: 2026/11/10
51: G06N
71: VISHWAKARMA INSTITUTE OF TECHNOLOGY
72: MESHRAM, Vishal Ambadas, MESHRAM, Vidula Vishal, ZAWARE, Geeta Balkrushna, UMAK, Aishwarya Santosh, THOPATE, Riya Nilesh, UKARDE, Siddhant Nitin, UGALE, Shubham Ashok, UKIRADE, Srujani Shashikant, UCHADE, Bhavesh Sopan, UGAVEKAR, Advait Mahesh

54: AN IOT SENSORS AND MACHINE LEARNING BASED SYSTEM FOR REAL-TIME SOLAR ENERGY MONITORING AND PREDICTION

00: -

The present invention is related to an IoT sensors and machine learning based system for real-time solar energy monitoring and prediction. The invention provides a real-time solar energy monitoring and prediction system that integrates IoT sensors with machine learning algorithms to measure and forecast solar power generation. The system uses an ESP32 microcontroller to collect environmental and electrical data, transmits it to a cloud-based FastAPI backend, and applies Random Forest regression to predict future energy output. A web dashboard displays real-time readings and forecasts, enabling intelligent energy planning and optimization. The solution is low-cost, scalable, and suitable for both residential and institutional applications.

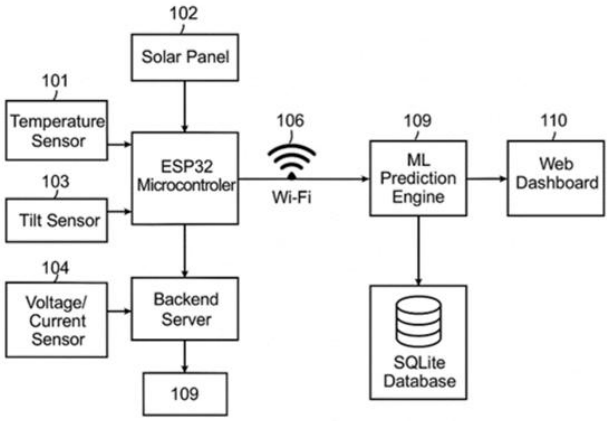

21: 2026/03857. 22: 2026/04/09. 43: 2026/11/10
51: G06N
71: VISHWAKARMA INSTITUTE OF TECHNOLOGY
72: TAMBE, Tanmay, SWANT, Rudra, MUNOT, Ayush, PATIL, Swati B., SABLE, Nilesh P.

54: A SYSTEM FOR AUTOMATED MODEL PERFORMANCE MONITORING AND INTELLIGENT RETRAINING IN MACHINE LEARNING OPERATIONS

00: -

The present invention is related to a system for automated model performance monitoring and intelligent retraining in machine learning operations. The system comprising: a performance monitoring agent intercepting predictions with ¡5ms latency overhead; a statistical analysis engine applying SPRT, CUSUM, and distribution tests with multi-algorithm consensus; an intelligent decision module evaluating degradation severity, data availability, resources, business impact, and historical patterns to compute weighted decision scores; a retraining orchestration system executing automated data preparation, adaptive hyperparameter optimization, training, statistical validation, and conditional promotion; and an adaptive learning controller using contextual bandit reinforcement learning to optimize thresholds based on retrospectively labeled outcomes. The system reduces manual monitoring by 85-95%, decreases detection time from days to minutes, optimizes computational resources by 30-50%, and integrates with MLFlow for experiment tracking and model registry.

21: 2026/03858. 22: 2026/04/09. 43: 2026/11/10
51: G06N
71: VISHWAKARMA INSTITUTE OF TECHNOLOGY
72: GARJE, Sushant, SHEKOKAR, Manaswi, GILANKAR, Arnav, VAIDYA, Varad, PATIL, Swati B., SABLE, Nilesh P.

54: A SYSTEM FOR CONTAINERIZED MACHINE LEARNING LIFECYCLE AUTOMATION USING DOCKER AND MLFLOW

00: -

The present invention is related to a system for containerized machine learning lifecycle automation using Docker and MLflow. This invention presents a comprehensive containerized machine learning architecture designed to automate and streamline the entire machine learning lifecycle from data ingestion to deployment within a unified Docker environment. The system integrates multiple components, including data sources, an ETL (Extract, Transform, Load) pipeline, model training and selection modules, MLflow integration, and a deployment API. Raw data from diverse inputs such as databases, CSV files, and APIs is processed through the ETL container, which performs data cleaning, transformation, and feature engineering before storing it in a structured database. The model training container executes multiple algorithms (Random Forest, XGBoost, and Neural Network), evaluates performance metrics, and automatically selects the best model. MLflow is employed for experiment tracking, parameter logging, and model registry management, ensuring reproducibility and efficient version control. This invention enables scalable, portable, and fully automated machine learning workflows, providing a standardized framework adaptable across industries such as finance, healthcare, manufacturing, and smart cities, significantly improving operational efficiency and deployment reliability.

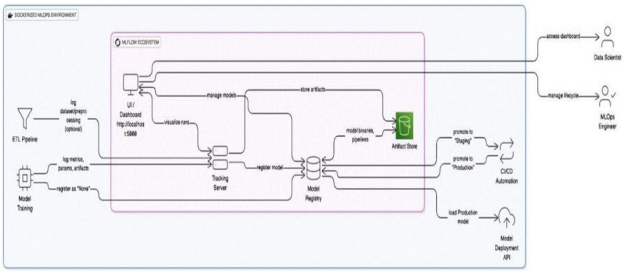

21: 2026/03881. 22: 2026/04/10. 43: 2026/11/10
51: A01G; A01K

71: SHANGHAI ACADEMY OF AGRICULTURAL SCIENCES
72: HUANG, Weiwei, ZHOU, Wenzong, YUAN, Quan, LV, Weiwei, ZHANG, Yuning, YANG, Hang
54: RICE-AUSTRALIAN LOBSTER-RICEFIELD EEL INTEGRATED ECOLOGICAL PLANTING AND BREEDING METHOD IN PADDY FIELDS
00: -
The present invention relates to a Rice-Australian Lobster-Ricefield Eel integrated ecological planting and breeding method in paddy fields, comprising: excavating circular ditches and forming field ditches in a paddy field, reinforcing the field ridges, installing anti-escape nets or films, and setting up a designated culture area for ricefield eels; selecting mid-late maturing rice varieties to transplant; and, after rice seedlings have fully recovered, stocking Australian lobster fries and ricefield eel fries sequently; feeding the Australian lobster fries with a dedicated formulated feed for Australian lobsters, and feeding the ricefield eel fries with a dedicated feed for ricefield eels and/or live baits; wherein, an integrated management is adopted in the method. The method constructs an ecological structure enabling benign material circulation and energy flow, solves the problem of niche synergy, and adopts integrated standardized operation and management, lowering the application threshold.

21: 2026/03882. 22: 2026/04/10. 43: 2026/11/10
51: A01G
71: Hefei Technology College
72: Huang Shuping, Li Yan, Zhang Fei, Zhao Bihuang, Yan Xiaoman, Wang Qianqian
54: A LANDSCAPE MAINTENANCE DEVICE FOR GARDEN DESIGN
00: -
This invention belongs to the technical field of garden landscape maintenance devices. Specifically, it relates to a landscape maintenance device for garden design, which comprises: a single-wheel cart; an sowing and maintenance mechanism symmetrically arranged at the bottom of the single-wheel cart; the sowing and maintenance mechanism includes: a soil-breaking component, which includes a rack that reciprocates vertically on the single-wheel cart and a soil-breaking cone that is fixedly connected to the extension rod; a fertilizing component, which includes a box, a sliding piston plate sealedly set in the box, a top rod connected to the piston plate, and a sliding rod fixedly connected to the top rod; a transmission component, which includes a transmission shaft rotatably set on the single-wheel cart. This invention realizes the mechanical linkage and rhythm matching of four processes of soil breaking, fertilizing, sowing, and backfilling through the setting of a transmission component composed of a push rod, a rectangular frame, a rack, and a transmission shaft, thereby improving the continuity and automation degree of garden maintenance operations.

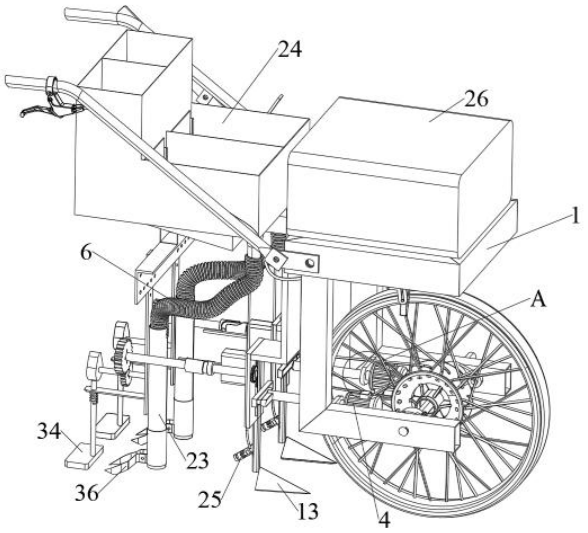

21: 2026/03883. 22: 2026/04/10. 43: 2026/11/10
51: A01C
71: HEBEI AGRICULTURAL UNIVERSITY, Tianjin Agricultural University, Department of Irrigation and Drainage,China Institute of Water Resources and Hydropower Research, INSTITUTE OF FARMLAND IRRIGATION OF CAAS, Institute of Cereal and Oil Crops, Hebei Academy of Agricultural and Forestry Sciences
72: LIU Hongquan, CHEN Renqiang, WANG Xiaoling, GAO Tongguo, WANG Fushun, ZHANG Liyong, GAO Huiyan, PAN Zenghui, ZHANG Zhiyu, LI Xiumei, HE Caizhi, BAI Hongbo, SONG Enkuang, XUE Zhu, LI Yanfeng, ZHOU Xinguo, YAN Long
54: INTELLIGENT WATER AND FERTILIZER INTEGRATION DEVICE AND METHOD FOR AGRICULTURAL PLANTING
00: -
The present invention relates to the technical field of smart agriculture, and in particular, to an intelligent water and fertilizer integration device and a using method thereof. The spectrum detection device designed in the present invention is provided with a

light source protection seat and a spectrometer protection seat, which prevent the spectrum detection device from being affected by external light and the environment during operation and thus cause large errors in detection results. The designed sliding rods and springs facilitate taking out the light source protection seat and the spectrometer protection seat for maintenance and replacement. The designed fertilizer supply device can use liquid fertilizers and granular fertilizers; the grinding rod can grind the granular fertilizers to accelerate the dissolution speed of the granular fertilizers and improve the efficiency. The stirring rods and stirring blades can ensure the uniform distribution of fertilizers in water during the irrigation process, and prevent the change of fertilizer concentration caused by fertilizer sedimentation, which would affect the precise fertilization effect. With the cooperation of the designed adding pipelines, the fertilizer supply device and the spectrum detection device, precise fertilization can be performed on the branch water pipes of different irrigation areas, so as to realize precise fertilization for each irrigation area while ensuring irrigation.

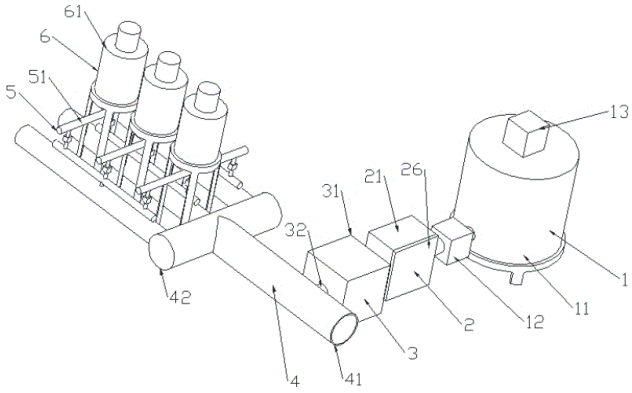

21: 2026/03884. 22: 2026/04/10. 43: 2026/11/10
51: E04B
71: Henan University of Urban Construction, China Southwest Architectural Design and Research Institute Corp. Ltd, China Construction Seventh Engineering Division Corp., Ltd.
72: LI, Jiangle, QU, Songzhao, ZHANG, Shulu, WANG, Yubing, ZHANG, Fengjian, LOU, Yafei, GUO, Pinggong, ZHAO, Yuxia, JIA, Haipeng, WU, Wenlong
54: PREFABRICATED SHEAR WALL CONNECTING STRUCTURE AND METHOD
00: -

Disclosed are a prefabricated shear wall connecting structure and method. The prefabricated shear wall connecting structure includes: a steel tube core cylinder, where a plurality of rows of U-shaped steel tie bars are disposed in a circumferential direction of the steel tube core cylinder, and a tail end of the U-shaped steel tie bar is configured to be connected to a tie bar in an adjacent wall body; shape memory alloy assemblies, where the shape memory alloy assembly is located between two side legs of the U-shaped steel tie bar; and a formwork fixedly connected to a side wall, close to one end of the steel tube core cylinder, of the wall body. The prefabricated shear wall connecting structure and method are simple in operation and excellent in seismic resistance.

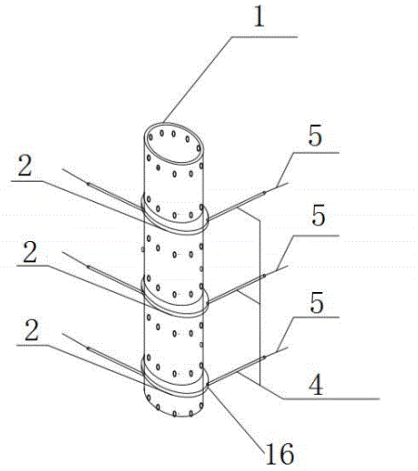

21: 2026/03885. 22: 2026/04/10. 43: 2026/11/10
51: A01G
71: HEBEI AGRICULTURAL UNIVERSITY, NINGBO UNIVERSITY, Hebei Science and Technology Innovation Service Center, Hebei Runnong Water saving Technology Co., Ltd
72: LIU Hongquan, GAO Huiyan, WANG Xiaoling, CHEN Renqiang, ZHANG Liyong, SU Wei, ZHANG Xiping, CHAI Chunling, YUE Zhipeng, ZHOU Zehao, GAO Jinling, GE Tida, TAN Haibin, WANG Xiaoli
54: AUTOMATIC IRRIGATION SYSTEM FOR CROP AND CONTROL METHOD THEREOF
00: -

The present invention discloses an automatic irrigation system for a crop and a control method thereof, comprising a soil moisture sensor, an information monitoring system, a central processing system, a remote control system, a filtration system, a water source sedimentation system, a water

source storage system, a fertilizer and pesticide mixing system, and an irrigation and chemical application system; the soil moisture sensor and a monitoring camera monitor soil moisture and crop information, transmit signals to the information monitoring system, the information monitoring system transmits the information to the central processing system for analysis and processing, and issues commands to complete subsequent operations of irrigation, fertilization, and chemical application. The control system of the present invention effectively performs full-area or designated-area automatic irrigation, fertilization, and chemical application on crops, reduces labor intensity of workers, improves intelligent management of crops, and achieves high efficiency and good results; the present invention effectively performs filtration treatment on a water source, ensures clean water, reduces blockage of the irrigation system by pollutants, and effectively removes pollutants.

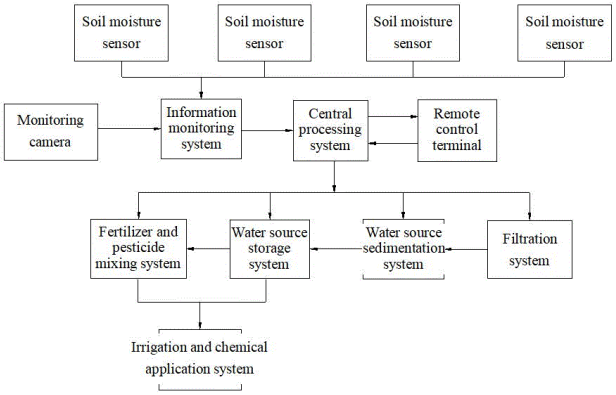

21: 2026/03886. 22: 2026/04/10. 43: 2026/11/10
51: G01K
71: CHINA HUADIAN CORPORATION LTD.
72: Zhenguo QIN, Bo LIU, Zhou ZHOU, Binghui ZHOU
33: CN 31: 202610127692.9 32: 2026-01-29

54: ONLINE TEMPERATURE MONITORING SYSTEM FOR HIGH-VOLTAGE SIDE CONNECTION OF HIGH-VOLTAGE STATION SERVICE TRANSFORMER

00: -

Disclosed is an online temperature monitoring system for a high-voltage side connection of a high-voltage station service transformer, belonging to the technical field of power device monitoring. The system includes a temperature measuring probe, a data transmission unit, a data processing and storage unit, and a display unit. The temperature measuring probe is mounted at a connecting flange between a high-voltage bushing of the high-voltage station service transformer and an isolated-phase enclosed busbar, and configured to collect a temperature signal of a connecting bolt. The temperature measuring probe is an online infrared thermal imager, which is sealingly mounted through trepanning in a specific position of a housing of a high-voltage side of the high-voltage station service transformer, directly facing an overheating risk point. The data transmission unit transmits, by a cable, the temperature signal to the data processing and storage unit located in a local control cabinet, and this unit is integrated with a network video recorder for storing temperature video data. The display unit is configured to display a temperature monitoring picture in real time. The present disclosure implements real-time, visual, and non-contact monitoring of temperatures of a conventional blind spot area, is simple in structure and convenient to mount, and can effectively provide early warning for overheating defects and ensure safe operation of a generator set.

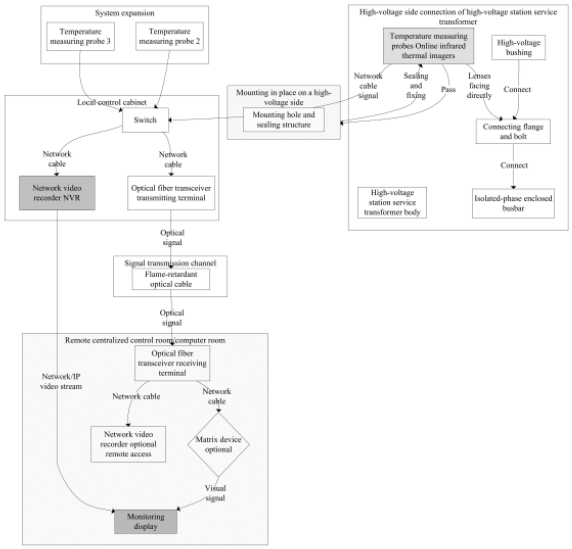

21: 2026/03892. 22: 2026/04/10. 43: 2026/10/20
51: C09K
71: MEXICHEM FLUOR S.A. DE C.V.
72: LOW, Robert E.
33: GB 31: 1813237.3 32: 2018-08-14
33: GB 31: 1901885.2 32: 2019-02-11

54: REFRIGERANT COMPOSITION AND USE THEREOF

00: -

Use as a refrigerant in a heat pump system in an electric vehicle of a composition is described. The composition comprises 1,1-difluoroethylene (R-1132a) and at least one fluorocarbon refrigerant compound selected from the group consisting of 2,3,3,3-tetrafluoropropene (R- 1234yf), difluoromethane (R-32), 1,3,3,3-tetrafluoropropene (R-1234ze(E)) and 1,1- difluoroethane (R-152a).

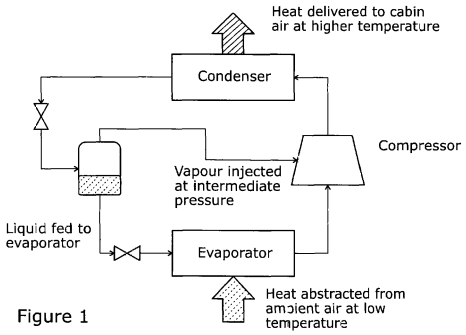

Figure 1

21: 2026/03907. 22: 2026/04/10. 43: 2026/10/20
51: B60K; B62D
71: MAHINDRA ELECTRIC AUTOMOBILE LIMITED
72: JAYARAMAN, Ramkumar, NIDASOSI, Basavraj Maruti, NAYAK, Bhargav, MAHADEVAN, Sudhan, VELLANDI, Vikraman
33: IN 31: 202321073888 32: 2023-10-30

54: REAR CROSS MEMBER ASSEMBLY OF A REAR FRAME OF A VEHICLE AND A METHOD THEREOF

00: -

A rear frame (100) comprising a plurality of longitudinal members (200A, 200B), a front cross member (300), and a rear cross member assembly (400). The plurality of longitudinal members (200A, 200B) span along the operative lengthwise direction of the vehicle and are spaced apart from each other in the operative widthwise direction of the vehicle. The front cross member (300) connects the longitudinal members at the operative front end of the longitudinal members (200A, 200B). The rear cross member assembly (400) connects the longitudinal members (200A, 200B) at the operative rear end of the longitudinal members (200A, 200B). The rear cross member assembly (400) comprises an integral construction (455, 460, 450) configured for mounting at least one suspension system component (456, 461) and at least one drive system component (450, 451).

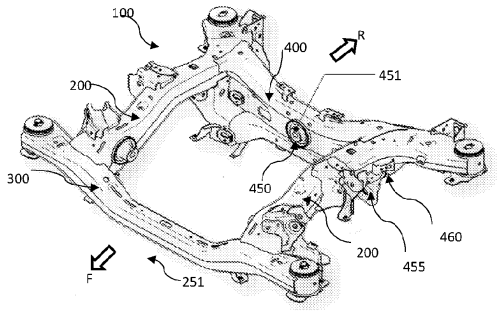

21: 2026/03951. 22: 2026/04/13. 43: 2026/11/11
51: G06F
71: Henan University of Urban Construction
72: XU Quan, LI Siyuan

54: METHOD AND SYSTEM FOR MATCHING CRIMINAL CASE ELEMENTS BASED ON LEGAL KNOWLEDGE GRAPH

00: -

The present invention discloses a method and system for matching criminal case elements based on a legal knowledge graph, comprising: adopting a natural language processing algorithm to parse and preprocess multi-source data, obtaining a standardized representation; based on the standardized representation, acquiring temporal and spatial descriptions between elements, constructing a temporary graph using a graph neural network and determining differences, obtaining a difference vector; based on the difference vector, adopting a natural language processing algorithm to compare contextual semantics, determining a location and a type of a conflict point; based on the location and the type of the conflict point, acquiring an associated chain of evidence, updating node weights of the temporary graph using a graph neural network, obtaining authenticity scores; based on the authenticity scores, fusing complementary information from multi-source data, obtaining a consistent set of elements; based on the consistent set of elements, acquiring a template of criminal case elements, determining a matching path; based on the matching path, determining completeness and optimizing weak connections using a graph neural network, obtaining a final element matching result.

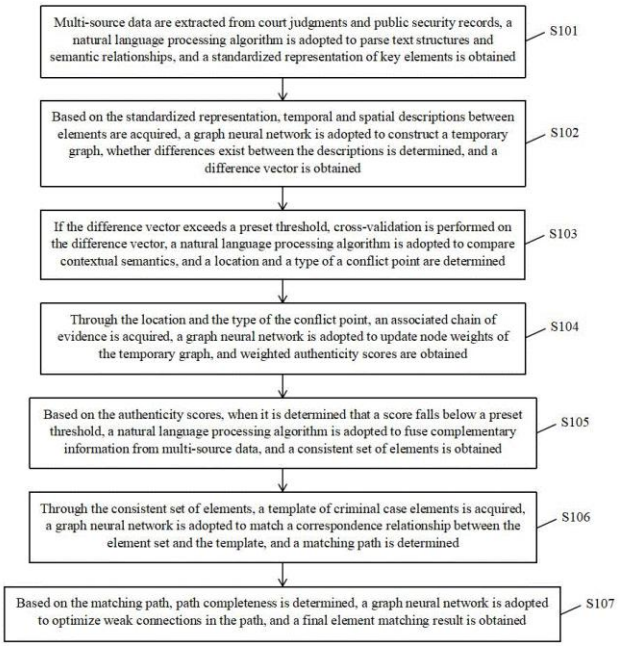

21: 2026/03952. 22: 2026/04/13. 43: 2026/11/11
51: E04B
71: Henan University of Urban Construction
72: MAN Yuan, Cui Yanwei, Guo Weiwei, SHI Luke, Yin Xiaojing, Li Jiangle

54: A FABRICATED DOUBLE-SIDED WALL HANGING PANEL STRUCTURE WITH THERMAL BREAK AND SOUND INSULATION FUNCTION

00: -

The invention discloses a fabricated double-sided wall hanging panel structure with thermal break and sound insulation function, relating to the technical field of architectural decoration. The structure comprises a vertical keel; two buckle plates detachably connected to two sides of the vertical keel; and a damping pad detachably connected between the buckle plates and the vertical keel, with a closed cavity formed in its hollow interior. A plurality of damping partitions are arranged at intervals on both inner walls of the closed cavity; the damping partitions are arranged in parallel on a single inner wall and symmetrically in a staggered manner on both sides of the closed cavity. The buckle plates are elastically clamped on the side surfaces of the vertical keel and press the damping pad; the damping partitions are connected end to end with non-rigid abutment at the joints. This solves the problem of significant sound bridge effect in existing rigid connection modes, where vibration energy is directly transmitted from one panel to the other through rigid connectors and keels when one panel is excited by sound waves, resulting in efficient sound transmission between the two panels and poor sound insulation performance.

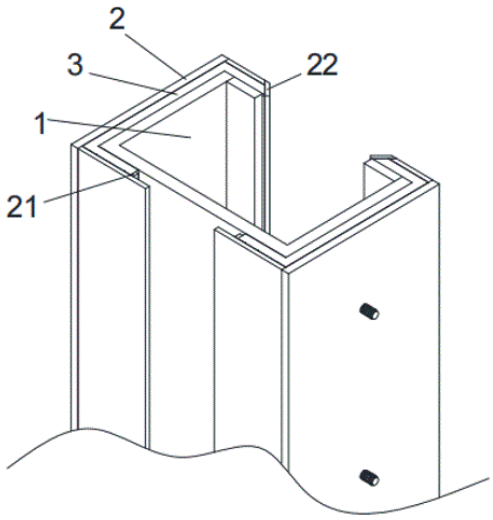

21: 2026/03953. 22: 2026/04/13. 43: 2026/11/11
51: G02B; G06F
71: Zhejiang Fashion Institute of Technology
72: YU, Wenbin
33: CN 31: 202510643486.9 32: 2025-05-19

54: IMMERSIVE INTERACTION SYSTEM FOR ARCHITECTURAL DESIGN BASED ON VIRTUAL REALITY TECHNOLOGY

00: -

The present application discloses an immersive interaction system for architectural design based on a virtual reality technology, which includes a head-mounted display device, a spatial positioning apparatus, a handheld interaction controller, an environment perception module, a three-dimensional modeling engine, and a dynamic rendering subsystem. The system significantly improves design immersion and operation efficiency by integrating a lightweight real-time rendering engine with multimodal interaction hardware, where a user may directly modify building model parameters through gestures, voice, and haptic feedback, and the system adjusts effects synchronously in real time, such that a response delay of a conventional design tool is reduced. A multi-user collaboration module supports synchronous editing and review by remote designers and, combined with dynamic permission management, improves team collaboration efficiency. An optimized spatial positioning algorithm and a distributed rendering

technique reduce dependence on high-end hardware and lower deployment costs.

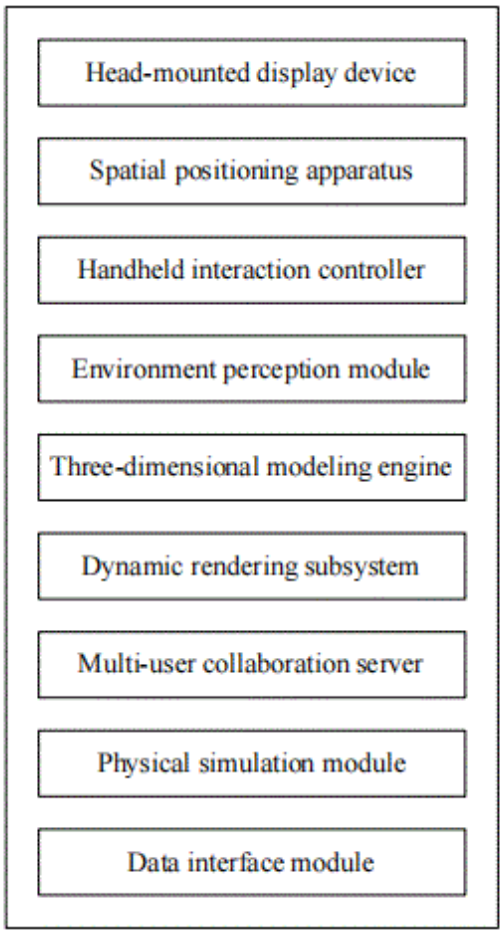

21: 2026/03960. 22: 2026/04/13. 43: 2026/11/11
51: C09K
71: LANZHOU JIAOTONG UNIVERSITY, CHINA RAILWAY 21ST BUREAU GROUP CO., LTD.
72: LI, Yingquan, LI, Jian, LI, Wenbo

54: POLYMER CROSS-LINKED SAND-FIXING AGENT RESISTANT TO ULTRAVIOLET AGING AND ITS PREPARATION METHOD

00: -

The invention relates to environmentally friendly functional materials and discloses a polymer cross-linked sand-fixing agent resistant to ultraviolet aging and a preparation method thereof. The agent comprises sodium silicate, potassium silicate, silicic acid gel, polyaspartic acid ester, nano zinc oxide, a chitosan-polyphenol complex, a phenylene bisamide antioxidant, deionized water, a dispersant, and a defoamer in defined proportions. An organic-inorganic cross-linked network is formed by combining silicate materials with polyaspartic acid ester, achieving a balance between mechanical strength and flexibility of sand fixation. The inclusion of nano zinc oxide and antioxidant components enhances resistance to ultraviolet aging, while the chitosan-polyphenol complex provides ecological compatibility and antibacterial properties. The preparation process is simple and suitable for large-scale production using readily available materials. The agent exhibits good stability and adaptability to harsh desert environments and is suitable for desertification control and ecological restoration applications.

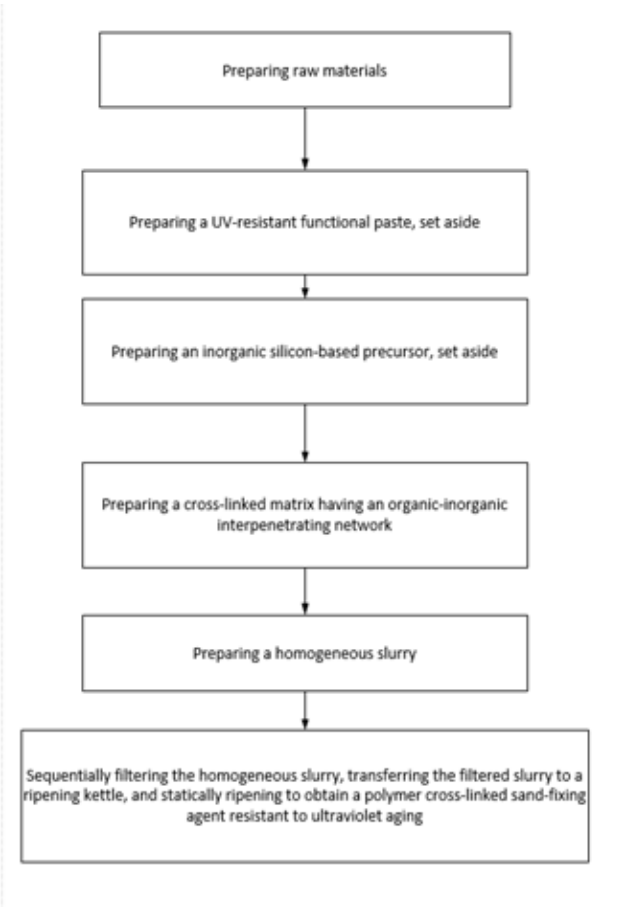

21: 2026/03961. 22: 2026/04/13. 43: 2026/11/11
51: G01C
71: VISHWAKARMA INSTITUTE OF TECHNOLOGY
72: KADAM, Priyanka Amol, RATHI, Snehal Rahul, JADHAV, Devendra Raju, KADAM, Laxmikant Manikrao, KADAM, Rohit Vitthal, DUBEY, Atul Sarvesh

54: A VEHICLE-MOUNTED IOT SYSTEM FOR AUTOMATIC POTHOLE DETECTION AND ROAD QUALITY MAPPING

00: -

This invention discloses a compact, vehicle-mounted IoT system that automatically detects potholes and other road surface defects using multi-sensor data and logs them for road quality mapping. The system integrates an ESP32 microcontroller with an MPU 6050 accelerometer/gyroscope, NEO 6M GPS module, optional HC SR04 ultrasonic sensor, and SD card storage in a low-cost enclosure mountable on any vehicle. Vertical z axis acceleration is continuously monitored, and sudden negative/positive spikes beyond calibrated thresholds (e.g., -1.8 g, -3.0 g) are used as robust triggers for pothole events. When a pothole event is detected, the ESP32 captures GPS coordinates, time, vehicle speed, acceleration magnitude, and, if available, ultrasonic distance to estimate severity, then logs a timestamped CSV record locally with software debouncing to avoid duplicate entries. The device works fully offline and later uploads data for generating geospatial road quality maps, enabling crowdsourced monitoring for municipalities and smart city platforms. Experimental field tests on a test vehicle confirmed clear correlation between z axis spikes and potholes, accurate location logging, and reliable SD-based storage, with ultrasonic depth sensing used as an auxiliary check. Automated road surface condition quality assessment using smart (IoT) devices.

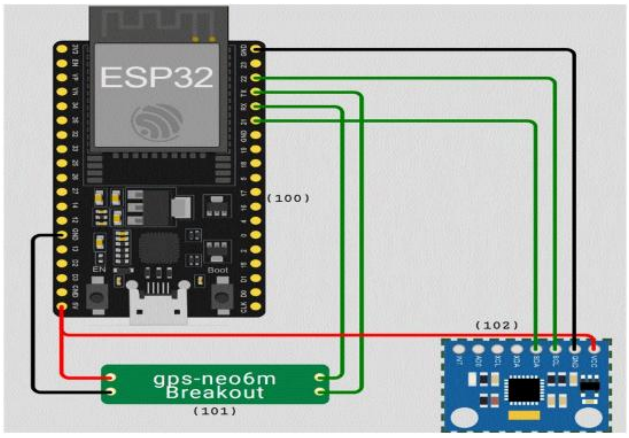

21: 2026/03962. 22: 2026/04/13. 43: 2026/11/11
51: A61B
71: VISHWAKARMA INSTITUTE OF TECHNOLOGY
72: RATHI, Snehal, CHAVHAN, Pranali, WANKHEDE, Disha Sushant, KATOLE, Sneha, THAKARE, Kunal, SOLANKE, Rahul, TAWARI, Soham

54: A NON-INVASIVE INTELLIGENT DEVICE FOR PRECISE ANAEMIA DETECTION USING DEEP LEARNING AND MULTIMODAL DATA FUSION

00: -

Anemia is a widespread global health issue and is usually diagnosed only through invasive blood-based tests. These tests require laboratory infrastructure, trained personnel, and chemical reagents, making them unsuitable for remote or resource-limited areas. The current invention proposes the use of a completely non-invasive and user-friendly device that is capable of hemoglobin measurement through fingernail bed imaging and photoplethysmography signal data. A camera with adequate LED lighting is responsible for image acquisition, while an optical sensor is used for capturing the heart pulse waveform. Image data is then processed using an image processing unit embedded in the device, using a multimodal learning framework that is capable of distinguishing between patterns that relate to various levels of hemoglobin. This is a portable, battery-operated device that proposes a novel solution for current anemia measurement techniques that were expensive, painful, and time-consuming. It is applicable for use in hospital or home settings.

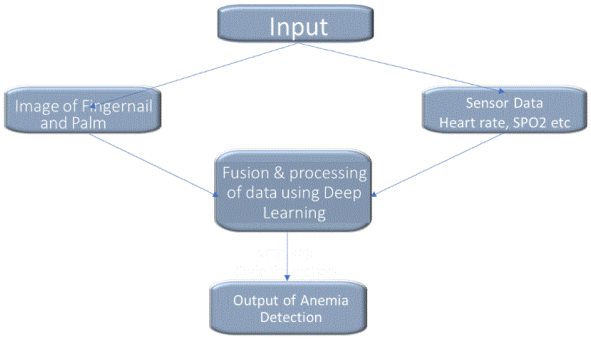

21: 2026/03963. 22: 2026/04/13. 43: 2026/11/11
51: G06F
71: VISHWAKARMA INSTITUTE OF TECHNOLOGY
72: RATHI, Snehal Rahul, MOKASHI, Arya Rahul, SALUNKE, Ashwini, WANKHEDE, Disha Sushant, CHAVHAN, Pranali

54: A SYSTEM FOR RAINWATER COLLECTION AND GROUNDWATER RECHARGE ASSESSMENT

00: -

A computer implemented system and method are disclosed for automatic evaluation of rooftop rainwater harvesting and artificial groundwater recharge potential at a user specified site. The system detects the site location, automatically retrieves environmental datasets including rainfall, groundwater depth, geological information, and map data from multiple external sources, and combines them with site parameters obtained from the user or from a convolutional neural network that segments rooftop imagery and classifies surface types. A backend decision engine performs hydrological computations, while a machine learning module comprising predictive models for rainfall and groundwater depth and a decision tree based recommendation engine determines suitable rainwater harvesting and artificial recharge structures, associated sizes, and costs. The system is deployable via web and mobile applications and optionally via a portable minimal operating environment, and provides interactive visual summaries, logs, downloadable reports, and certificates, reducing the need for expert intervention and manual calculations in designing site specific water harvesting and recharge solutions

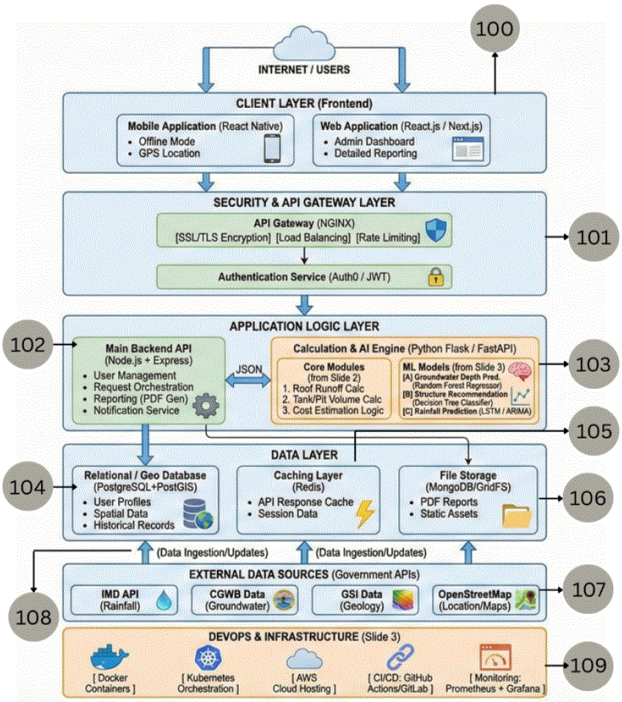

21: 2026/03964. 22: 2026/04/13. 43: 2026/11/11
51: G09B
71: VISHWAKARMA INSTITUTE OF TECHNOLOGY
72: DESHPANDE, Rupali Sadashiv, RAJPUT, Vaishali Sham, RAHATE, Aayush Ashish, MALLAWAT, Krishna Anup, AHMED, Shaikh Aqibe Ahmed Ashfaque, AHMED, Shaikh Afshan Ahmed Ashfaque, PATIL, Harshvardhan Babasaheb, KUMAR, Ankush, AGRAWAL, Kaushal Narendra

54: QUEST BASED GAMIFIED LEARNING SYSTEM

00: -

This invention introduces an interactive gamified learning system tailored for primary school students to build mathematical proficiency through engaging, medieval-themed gameplay. At its heart is a navigable world map depicting castles, villages, and quests, serving as the central interface where users unlock nine targeted mini-games addressing core skills like directions, memory association, fractions, matching, and sequencing. Each game employs visual aids such as animated knights or fraction pies, delivering immediate feedback and adaptive difficulty that scales based on performance to maintain optimal challenge without frustration. The system's design emphasizes accessibility with lightweight web or app deployment, requiring minimal resources for schools in diverse settings. Real-time progress tracking rewards achievements with virtual badges

or map expansions, fostering motivation and retention—studies on similar gamified math tools show gains in conceptual understanding and interest, especially for topics like equivalents via memory matches. By prioritizing fun over rote drills, it transforms abstract math into narrative-driven adventures, making it ideal for classroom or home use to enhance engagement and outcomes.

21: 2026/03965. 22: 2026/04/13. 43: 2026/11/11
51: G08G
71: VISHWAKARMA INSTITUTE OF TECHNOLOGY
72: UKE, Shailaja Nilesh, SHINDE, Sandeep Ramrao, CHAUHAN, Omkrish Premal, PACHORKAR, Pratik Balasaheb, PABARI, Meet Bharat, OVALEKAR, Saksham Parag
54: A SMART OVERSPEEDING ALERT SYSTEM
00: -
A real-time speed alert system for vehicles is disclosed for preventing over speeding using gps-based monitoring and server-assisted speed-limit retrieval. An esp32 microcontroller connected to a gps module continuously acquires the vehicle's location and current speed and transmits this information with a vehicle class to a remote server over wi fi. The server identifies the current road type using openstreetmap (osm) data and retrieves the corresponding legal speed limit from an official government dataset based on the road type and vehicle class. The esp32 compares the permitted speed with the real-time gps speed and activates an audible buzzer when the vehicle exceeds the allowed limit. The system operates entirely in real time without storing user or overspeed data, providing a privacy-preserving, low-cost solution suitable for integration into multiple vehicle categories for automotive safety applications.

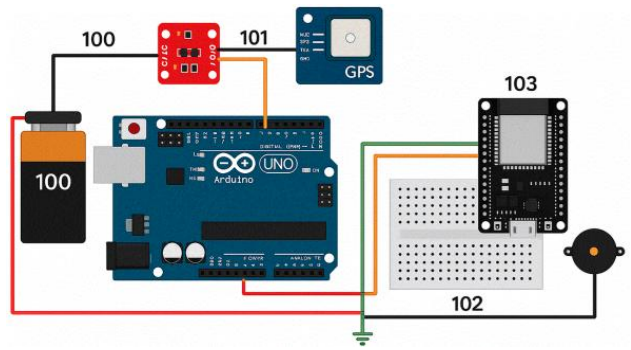

21: 2026/03966. 22: 2026/04/13. 43: 2026/11/11
51: G05D
71: VISHWAKARMA INSTITUTE OF TECHNOLOGY
72: GAIKWAD, Shruti, MALI, Divyani, BACHHAWAT, Aashi, KALE, Parth, MUNDE, Aditi, MAHAJAN, Rupali Atul, DESAI, Sharada, SHILASKAR, Swati, RAUT, Ketan
54: A FUZZY-NEURO ENVIRONMENTAL EQUILIBRIUM OPTIMIZER (FNEEO) SYSTEM FOR SMART URBAN CLIMATE REGULATION
00: -
The invention is seen through the integration into the smart city infrastructure of an adaptive hybrid system under the name of Fuzzy-Neuro Environmental Equilibrium Optimizer (FNEEO) that combines fuzzy reasoning, neural learning, and genetic evolution for the purpose of keeping the ecological balance. There is a continuous flow of environmental data from IoT sensors that the digital system utilizes to make real-time decisions on the very important environmental factors such as air quality, temperature, and energy load. The "system" has out-of-the-box features like autonomous, uncertainty-tolerant, and energy-efficient environmental regulations because of the analysis of feedback and the implementation of evolutionary changes in algorithms. When it comes to sustainable and smart urban climate control, the system gives a technically solid answer by offering a blended model.

21: 2026/03967. 22: 2026/04/13. 43: 2026/11/11
51: G01S
71: VISHWAKARMA INSTITUTE OF TECHNOLOGY
72: RATHI, Snehal Rahul, KADAM, Priyanka Amol, ATUGADE, Siddhesh S., AUNDHAKAR, Vedant R., GRAMOPADHYE, Atharva S., AVHAD, Pruthvi M.
54: A LOST OBJECT TRACKER THROUGH GPS MODULE

00: -
DOTSPOT is an innovative, low-cost GPS tracking device designed for real-time monitoring of mobile assets including vehicles, personal property, and real estate equipment. The compact system integrates an ESP32 microcontroller with a high-precision NEO-6M GPS module, delivering location accuracy within 3-8 meters under standard conditions. Location coordinates, timestamp, speed, and status data transmit automatically via Wi-Fi or GSM networks to a secure cloud-based dashboard, enabling continuous tracking without user intervention. Key features include ultra-low power consumption for extended battery life, robust encryption for data security, and intelligent alert notifications for geofence violations, speed thresholds, or connectivity loss. The scalable architecture supports deployment across diverse applications—from fleet management and asset recovery to personal safety monitoring. DOTSPOT eliminates manual tracking requirements while providing actionable insights through intuitive web and mobile interfaces. This energy-efficient solution represents a significant advancement in affordable, reliable IoT-based object tracking technology suitable for both individual and enterprise-scale implementations.

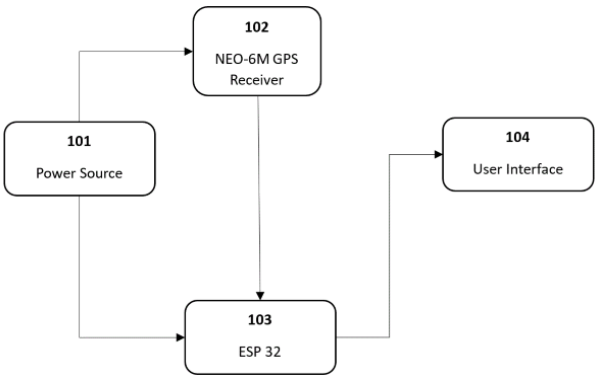

21: 2026/03968. 22: 2026/04/13. 43: 2026/11/11
51: G08G
71: VISHWAKARMA INSTITUTE OF TECHNOLOGY
72: UKE, Shailaja Nilesh, SHINDE, Sandeep Ramrao, NIKAM, Puja Santosh, PAMPATTIWAR, Shloka Avinash, KALASKAR, Yash Amol, DUBAL, Atharv Umeahchandra
54: A VEHICLE-TO-VEHICLE COMMUNICATION SYSTEM FOR ENHANCING ROAD SAFETY AND EFFICIENCY

00: -
A vehicle-to-vehicle (v2v) communication system enabling direct, real-time data exchange between vehicles is disclosed. The system comprises an esp32-based on-vehicle unit integrating an mpu6050 motion sensor for automated incident detection and a dedicated mobile application providing multi-modal alerts and voice communication. Using short-range wi fi and http/rest protocols, vehicle units transmit and receive hazard and incident alerts directly via ip-based communication, independent of cellular networks or roadside infrastructure. Local led and buzzer indicators and app-based visual, textual, and spoken notifications provide immediate awareness, while a walkie-talkie style voice messaging feature allows drivers to coordinate directly. The low-cost, modular design supports broad deployment across automotive safety, emergency services, fleet management, and intelligent transportation systems.

21: 2026/03969. 22: 2026/04/13. 43: 2026/11/11
51: F24F
71: VISHWAKARMA INSTITUTE OF TECHNOLOGY
72: KADAM, Priyanka, RATHI, Snehal, BACHHAV, Pranav, BHARSAKLE, Prathmesh, BONDRE, Ananya, BURGUL, Vedant
54: A SMART CABIN AIR QUALITY MONITORING AND CONTROL SYSTEM

00: -
The current invention concerns an intelligent system of cabin air quality monitoring and control in closed spaces. The system constantly controls the air quality with a gas sensor and temperature and humidity sensors to evaluate the conditions of the cabin in real time. A microcontroller interprets the measured data, and automatically enables ventilation and warning systems when the level of pollutants surpasses targets set as safe limits. The status of air quality and environmental parameters are shown in real time on an LCD display and occupants are notified of dangerous conditions by visual and audio indicators. It is a small, low-priced, power-efficient, autonomous invention, and will be better at enhancing safety, comfort and the condition of air in enclosed cabin space as well as at offering the ability to operate in irregular environments without the necessity to be connected to some form of power.

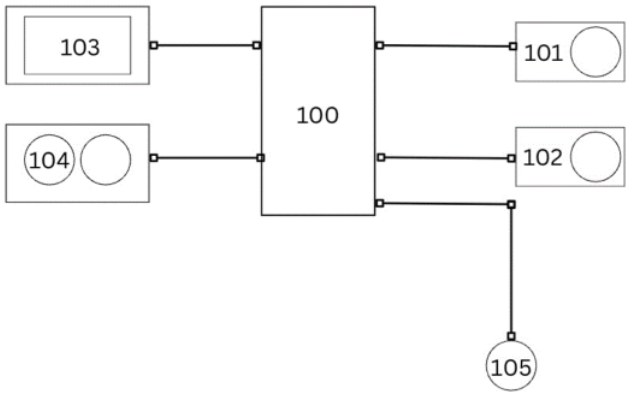

21: 2026/03971. 22: 2026/04/13. 43: 2026/11/11
51: G06Q
71: VISHWAKARMA INSTITUTE OF TECHNOLOGY
72: UKE, Shailaja Nilesh, Shinde, Sandeep Ramrao, NAIR, Anand Udayabhanu, NAROTE, Rushikesh Kishorkumar, KHATIB, Muhammad Taha Sameer, PADWAL, Rajanee Rajesh

54: A RFID-BASED RECYCLE-REWARD SYSTEM USING ESP32 AND SD CARD LOGGING

00: -

A rfid-based smart recycling-reward system using an esp32 microcontroller and micro sd card for local data logging is disclosed. The device identifies participants via rfid tags, assigns category-based reward points using push buttons, and records transactions including tag uid, user identifier, material category, awarded points, and cumulative total to a csv file on the sd card. Immediate offline feedback is provided through leds and a lcd display, and an ultrasonic sensor can verify actual material deposition. The system operates fully offline for data collection, eliminating dependency on continuous internet connectivity and costly cloud infrastructure, while supporting a hybrid workflow in which logged data is periodically uploaded to a web dashboard for visualization and analytics in recycling programs.

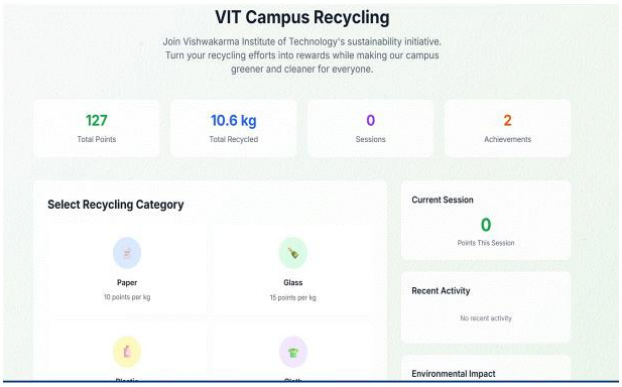

21: 2026/03972. 22: 2026/04/13. 43: 2026/11/11
51: G08G
71: VISHWAKARMA INSTITUTE OF TECHNOLOGY
72: KOTHAWADE, Aaditya Yogesh, PATIL, Soham, PANDEY, Vivek, MAHAJAN, Akshay, MAHAJAN, Rupali Atul, DESAI, Sharada, SHILASKAR, Swati, RAUT, Ketan

54: A SOFT COMPUTING-BASED SMART TRAFFIC SIGNAL CONTROL SYSTEM

00: -

A soft computing-based smart traffic signal control system is disclosed that provides a hybrid framework for real-time adaptive intersection management. The system combines fuzzy logic, neural networks, and evolutionary algorithms to dynamically adjust traffic signal timings based on real-time data from IoT sensors, thereby reducing congestion, travel time, and fuel consumption. Neural networks adapt to varying traffic situations, while evolutionary algorithms perform global optimization of controller parameters, and an emergency vehicle priority mechanism ensures rapid and safe passage for priority vehicles. Simulation results indicate significant reductions in congestion, offering a sustainable intelligent solution for modern smart cities.

21: 2026/03982. 22: 2026/04/13. 43: 2026/10/20
51: A61K; A61P
71: BIOPROJET PHARMA
72: CAPET, Marc, ROBERT, Philippe, FINANCE, Olivier, JULIEN, Jean-Stéphane, LECOMTE, Jeanne-Marie, SCHWARTZ, Jean Charles, MELSOPP, Elsie, BUDUR, Kumaraswamy
33: US 31: 63/590,678 32: 2023-10-16
33: US 31: 63/616,039 32: 2023-12-29
33: US 31: 63/679,270 32: 2024-08-05
33: EP 31: 24306216.3 32: 2024-07-18

54: NEW FORMULATIONS OF PITOLISANT AND METHODS OF USE

00: -

An oral dosage form comprising: a core; and a delayed-release coating that surrounds the core, wherein the core comprises pitolisant or a pharmaceutically acceptable salt, solvate, or hydrate thereof; an alkaline agent, and optionally one or more pharmaceutically acceptable excipients. Method to produce said composition. Said composition for use in the therapy.

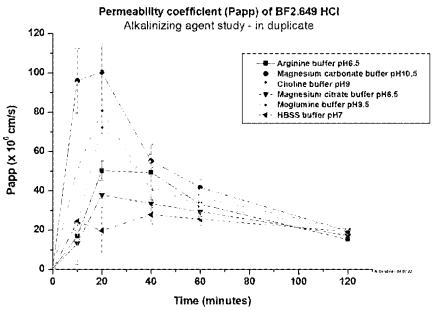

21: 2026/04004. 22: 2026/04/14. 43: 2026/11/11
51: B21D
71: Shanghai Civil Aviation College
72: ZHANG, Yunhe, CHEN, Hongguang, MING, Hui, PENG, Yanan, WANG, Zhiwang

54: BENDING FORMING METHOD AND DEVICE FOR TITANIUM ALLOY TUBES

00: -

The present invention provides a bending forming method and device for titanium alloy tubes, and belongs to the technical field of bending forming of titanium alloy tubes. The present invention provides a bending forming method for titanium alloy tubes, including subjecting a titanium alloy tube blank to bending forming under an ultrasonic vibration condition to obtain a bent titanium alloy tube. In the present invention, ultrasonic vibration-assisted forming is capable of eliminating a residual stress in the bent tube and reducing springback; and an ultrasonic vibration effect is capable of reducing warping and distortion of the bent tube, thereby further improving the forming quality of the bent titanium alloy tube.

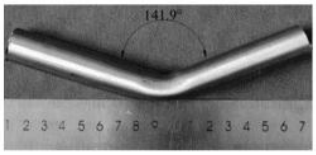

21: 2026/04006. 22: 2026/04/14. 43: 2026/11/11
51: H01M
71: Anhui LEOCH Power Supply CORP.
72: Qiangqiang KUANG, Yi LIU, Nannan YU, Jiejie XU, Li HE, Yanyan XIAO, Ruqiang SUN

54: LONG-LIFE LEAD-ACID BATTERY

00: -

Disclosed is a long-life lead-acid battery, including negative electrode plates and positive electrode plates. A plurality of groups of the positive electrode plates and a plurality of groups of the negative electrode plates are alternately stacked at intervals to form a battery electrode group, a terminal post is connected and mounted on the top end of the battery electrode group, a fastening nut is in threaded connection with an outer wall of a top end of the terminal post, the fastening nut is in threaded engagement with a terminal post hole of a battery cover, so that the fastening nut continues to moves downward and constantly compresses a washer; the washer transmits pressure to a rubber ring, ultimately causing the rubber ring to deform. According to the present disclosure, during the use of the battery, the bottom of the positive electrode plate is suspended, allowing the electrode plate to grow freely in the height direction. Meanwhile, as the internal width of the battery case is greater than the width of the electrode plate, the electrode plate can also grow freely in the width direction. Two groups of electrode plate feet are arranged at the bottom of the negative electrode plate. As the electrode plate grows, the electrode plate feet can gradually spread apart to provide space for the growth of the electrode plate.

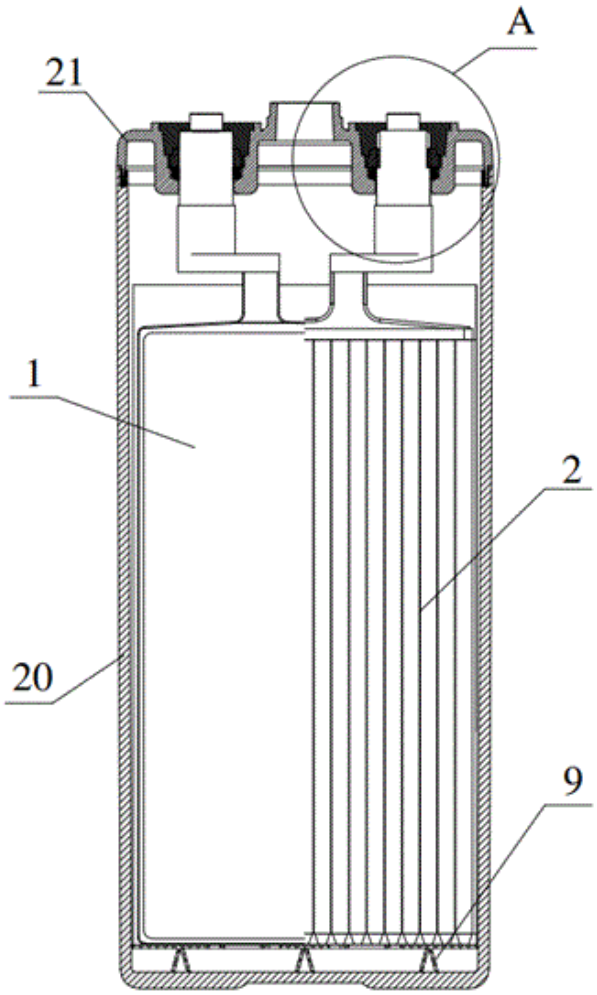

21: 2026/04008. 22: 2026/04/14. 43: 2026/11/11
51: B23Q
71: Shenzhen Rizhao Automation Equipment Co.,Ltd.
72: Hu Anxi, Peng Changlong, Lin Anguo, Hu Zhenxiang
54: A NUMERICAL CONTROL MACHINE TOOL DEBURRING CONTROL METHOD BASED ON INTELLIGENT ALGORITHM
00: -
The present invention discloses a numerical control machine tool deburring control method based on intelligent algorithm. The method adopts a depth camera and a 2D vision sensor to scan a burr region of a workpiece, obtains three-dimensional point cloud data and surface texture information of burrs, thereby accurately calculating position coordinates, height values and distribution density of the burrs. A particle swarm optimization algorithm is adopted to calculate an optimal motion trajectory of a cutter with machining efficiency and path smoothness as targets. According to the optimized motion trajectory, the numerical control machine tool executes deburring machining, and collects cutting force data. When the cutting force exceeds a preset threshold value, a feed speed and a spindle speed are dynamically adjusted, and the adjusted parameters are fed back to the particle swarm optimization algorithm to perform trajectory re-planning. The method realizes efficient and accurate deburring machining through combination of intelligent perception and algorithm optimization, effectively improves machining quality and efficiency, and has strong environmental adaptability and real-time adjustment capability at the same time, being suitable for machining scenarios of various complex workpieces.

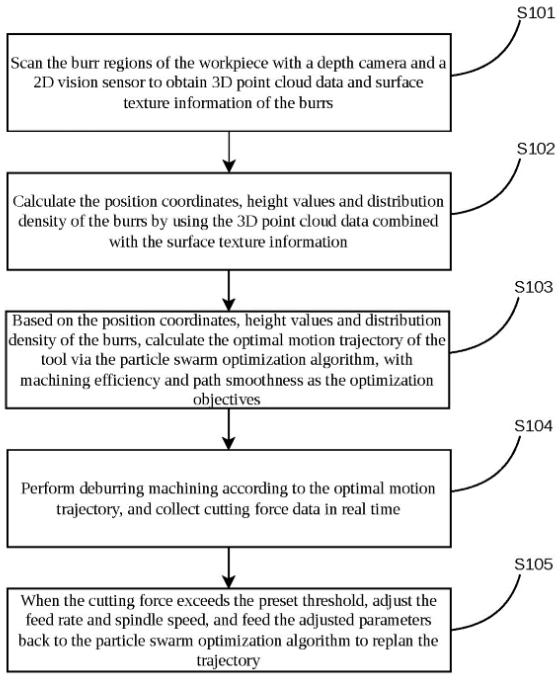

21: 2026/04067. 22: 2026/04/15. 43: 2026/11/12
51: G01N
71: FUZHOU UNIVERSITY
72: LI Xiaojing, HUANG Shuyang
33: CN 31: 2026102189010 32: 2026-02-24
54: METHOD FOR PREPARING NANOPLASMONIC METASURFACE BIOSENSOR AND APPLICATION THEREOF IN DETECTING NEW PSYCHOACTIVE SUBSTANCES
00: -
This invention discloses a method for preparing a nanoplasmonic metasurface biosensor and an

application thereof in detecting new psychoactive substances, belonging to the technical field of environmental monitoring. The present invention forms a nanoplasmonic metasurface by preparing a nanopore array and a plasmonic active metal layer on the sensor surface, where the metal nanostructures generate a strong localized electromagnetic field enhancement effect under light excitation. Subsequently, a carboxyl/methoxy mixed thiol-polyethylene glycol self-assembled monolayer is used for modification to form a stable, anti-nonspecific adsorption biointerface; after activation with N-hydroxysuccinimide/1-ethyl-3-(3-dimethylaminopropyl) carbodiimide, the surface carboxyl groups are converted to active esters, facilitating covalent coupling with specific monoclonal antibodies against the target substance. Finally, the antibody is coupled, enabling the sensor to capture target analytes through antigen-antibody specific binding, causing a change in the interfacial refractive index, which in turn leads to a shift in the plasmon resonance peak, achieving optical signal transduction.

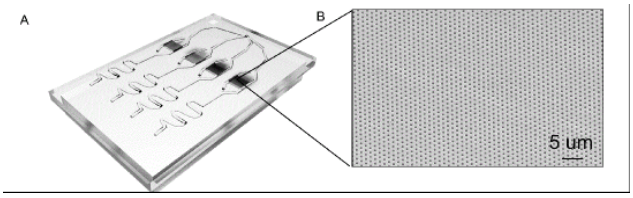

21: 2026/04068. 22: 2026/04/15. 43: 2026/11/12
51: C12N
71: Anqing Normal University, Anhui Yuelan Pharmaceutical Co., Ltd., Institute of Chinese Materia Medica, China Academy of Chinese Medical Sciences
72: Yin Liwei, Zheng Liang, Yang Chuncheng, Cui Shuang, Li Conghu, Peng Huasheng, Zhou Jinhua, Hu Ting, Yang Shifei, Liang Shuang, Zhong Dongxue, Zhu Chenchen, Li Jiaying, Li Meidan, Duan Santian, Zhou Liangxin, Guang Ying, Feng Yuanyuan, Fang Liangrui, Wang Kangkang, Guan Xinyu
33: CN 31: 2025111611933 32: 2025-08-19
54: STRAIN OF WOLFIPORIA COCOS YX3, CULTURE MEDIUM THEREOF, USE AND CULTIVATION METHOD THEREOF
00: -
The present invention provides a strain of Wolfiporia cocos (W. cocos) YX3, deposited in the China Center for Type Culture Collection (CCTCC) with a deposit number of CCTCC NO: M 2025757. The present invention also provides a spawn culture medium for the W. cocos YX3. Raw materials of the culture medium include, by weight parts: 38-42 parts of main material, 6-8 parts of auxiliary material, 1.5-2.5 parts of carbon source, 0.4-0.6 parts of calcium source, 0.04-0.06 parts of potassium source and 0.04-0.06 parts of nitrogen source. The main material includes pine wood blocks and pine sawdust, and the pine wood blocks are soaked in an ammonium salt solution. The present invention also provides use of the W. cocos YX3 and the spawn culture medium in W. cocos cultivation. The present invention also provides a cultivation method of the W. cocos YX3. The W. cocos YX3 has good quality and high sclerotium formation rate.

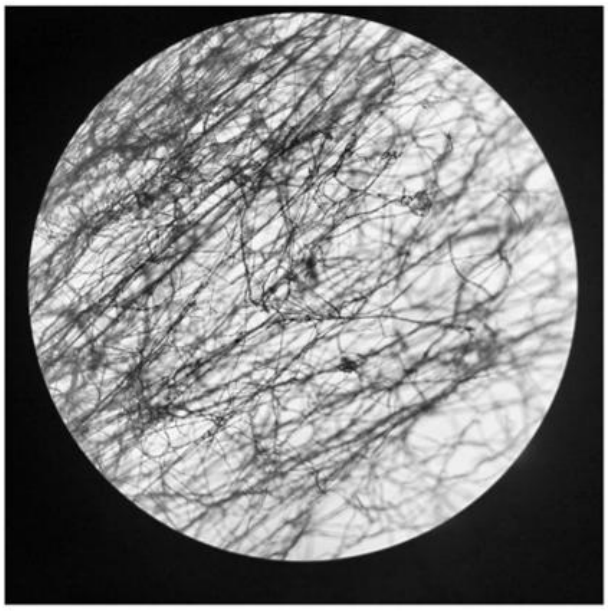

21: 2026/04069. 22: 2026/04/15. 43: 2026/11/12
51: C12N
71: Anqing Normal University, Anhui Yuelan Pharmaceutical Co., Ltd., Institute of Chinese Materia Medica, China Academy of Chinese Medical Sciences
72: Yin Liwei, Yang Chuncheng, Huang Zhu, Zhang Hongfei, Peng Huasheng, Mu Dan, Cui Shuang, Zhong Dongxue, Yang Shifei, Liang Shuang, Li Jiaying, Zhu Chenchen, Li Meidan, Duan Santian, Wang Kangkang, Guan Xinyu, Luo Jing, Fang Liangrui, Ye Zihang, Wu Junxiang, Zhou Liangxin
33: CN 31: 2025113531492 32: 2025-09-22
54: USE OF LIGNIN MONOMER AND CULTURE MEDIUM FOR PRESERVATION OF WOLFIPORIA COCOS STRAIN

00: -
The present invention provides use of a lignin monomer, including any one of the following: A. use of a lignin monomer in promoting the growth of Wolfiporia cocos (W. cocos), where the lignin monomer includes at least one of an H-type lignin monomer and a G-type lignin monomer; a concentration of the H-type lignin monomer is less than or equal to 5 mmol/L, and a concentration of the G-type lignin monomer is less than or equal to 1 mmol/L; and B. use of a lignin monomer in the preservation of a W. cocos strain and inhibition of degeneration of a W. cocos strain, where the lignin monomer includes at least one of phenol, an S-type lignin monomer and a G-type lignin monomer, where concentrations of the phenol and the G-type lignin monomer are greater than or equal to 5 mmol/L, and a concentration of the S-type lignin monomer is greater than or equal to 1 mmol/L. The present invention also provides a culture medium for preservation of a W. cocos strain. The present invention finds that the lignin monomer and the concentration of the lignin monomer exert significant effects on the growth and preservation of W. cocos, and the lignin monomer can be used for the growth of W. cocos and the preservation of strain.



21: 2026/04071. 22: 2026/04/15. 43: 2026/11/12
51: F16L
71: Jinhua University of Vocational Technology
72: BAI, Dongming, LIAO, Ziyu, SHEN, Jingyi, JIANG, Le, QIN, Xuhuan
54: LARGE-ANGLE BENDING PIPELINE ROBOT
00: -
The present invention discloses a large-angle bending pipeline robot, relating to the technical field of pipelines. The robot includes a controller, and a moving assembly, a steering device and a support assembly connected in sequence. The moving assembly and the support assembly are provided with arm assemblies for supporting a pipe wall. A multi-sensor fusion module including vision, ranging and motion attitude sensors is integrated at a front end of the moving assembly. The steering device is composed of a plurality of steering assemblies connected via universal joints. The support assembly is provided with steering engines for retracting and releasing driving ropes. The driving ropes pass through through-holes in the steering assemblies and are connected to a support base of the moving assembly. The moving assembly is provided with a telescopic assembly for driving the support base to move axially. The controller is communicatively connected to each component.

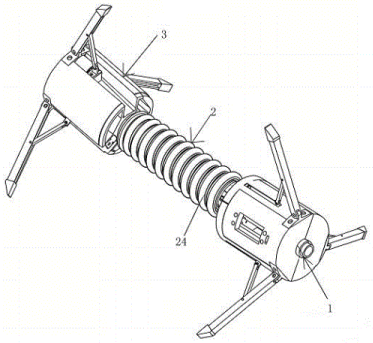

21: 2026/04072. 22: 2026/04/15. 43: 2026/11/12
51: C12N
71: Anqing Normal University, Anhui Yuelan Pharmaceutical Co., Ltd., Institute of Chinese Materia Medica, China Academy of Chinese Medical Sciences
72: Yin Liwei, Hu Ting, Zhao Kai, Peng Huasheng, Wu Yan, Yang Chuncheng, Huang Zhu, Yang Shifei, Cui Shuang, Liang Shuang, Zhong Dongxue, Li Jiaying, Zhu Chenchen, Li Meidan, Feng Yuanyuan, Fang Liangrui, Guan Xinyu, Ye Zihang, Wang Kangkang, Zhou Liangxin
33: CN 31: 2025111611967 32: 2025-08-19
54: STRAIN OF WOLFIPORIA COCOS YX2, CULTURE MEDIUM THEREOF, USE AND CULTIVATION METHOD THEREOF
00: -
The present invention provides a strain of Wolfiporia cocos (W. cocos) YX2, deposited in the China Center for Type Culture Collection (CCTCC) with a deposit number of CCTCC NO: M 2025758. The present invention also provides a spawn culture medium for the W. cocos YX2. Raw materials of the culture medium include, by weight parts: 15-20 parts of main material, 4-6 parts of Solidago canadensis L., 0.8-1.2 parts of carbon source, 0.2-0.3 parts of

calcium source, 0.04-0.06 parts of potassium source and 0.04-0.06 parts of mildew inhibitor. The present invention also provides use of the W. cocos YX2 and the spawn culture medium in W. cocos cultivation. The present invention also provides a cultivation method of the W. cocos YX2. The W. cocos YX2 has good quality and a high sclerotium formation rate.



21: 2026/04073. 22: 2026/04/15. 43: 2026/11/12
51: B24D
71: ZHENGZHOU JIXIANG ABRASIVE CO.,LTD.
72: Yang Yongjian, Niu Weiyong, Li Baochang, Zheng Yong, Li Yonghui, Sun Jin, Zhang Yajun

54: A CRACK-RESISTANT AND EXPLOSION-RESISTANT RESIN GRINDING WHEEL

00: -

The invention discloses a crack-resistant and explosion-resistant resin grinding wheel, which specifically relates to the technical field of resin grinding wheels, comprising a hub, the outer side of the hub is provided with a polishing assembly, the polishing assembly comprises a connecting sleeve arranged on the outer side of the hub, the outer side of the connecting sleeve is provided with a heat conduction cylinder for heat conduction, the outer side of the heat conduction cylinder is sleeved with a polishing grinding wheel body for polishing, the outer side of the polishing grinding wheel body is provided with a plurality of stepped slopes, the plurality of stepped slopes are arranged in a stepped shape. The invention, by arranging the heat conduction cylinder, enables heat generated by grinding to be rapidly conducted from the polishing grinding wheel body to the heat conduction cylinder, and further conducted to the hub and the supporting wheel eyebrow, effectively conducts heat from a local high-temperature area, and reduces heat accumulation inside the polishing grinding wheel body.

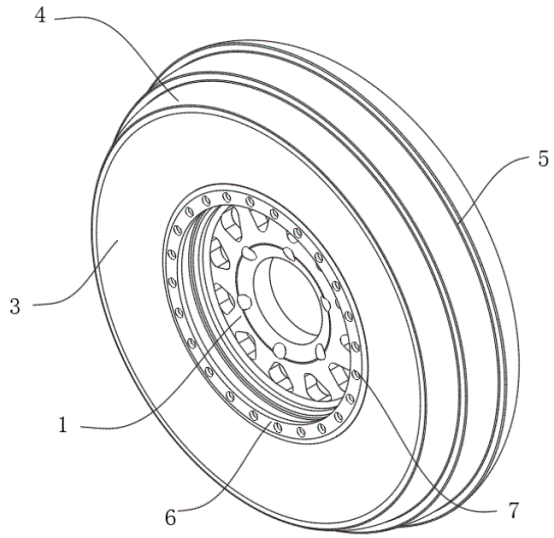

21: 2026/04074. 22: 2026/04/15. 43: 2026/11/12
51: A61B
71: HUNAN NORMAL UNIVERSITY
72: Zilun QIU, Yufei LI, Yangfei YI

54: GASTRIC ENDOSCOPE DEVICE

00: -

The disclosure relates to a gastric endoscope device, which aims to solve problems of missed diagnosis of lesions caused by sticking of folds of gastric wall and blocking of visual field, and insufficient operation stability in existing gastroscopy. This device includes a sleeve, an endoscope body detachably inserted into the sleeve, and an expansion assembly composed of a first handheld part, a tip extending into stomach, and a plurality of elastic wires. The plurality of elastic wires are inserted into through holes of the sleeve and are arc-shaped with no constraint to enclose a cage-shaped supporting structure, which can gently expand the folds of gastric wall and expand observation field of view. The sleeve has functions of guiding, washing and suction, which, in combination with detachable design of the endoscope body, improves visual field clarity and operation efficiency of examination and reduces discomfort of patients.

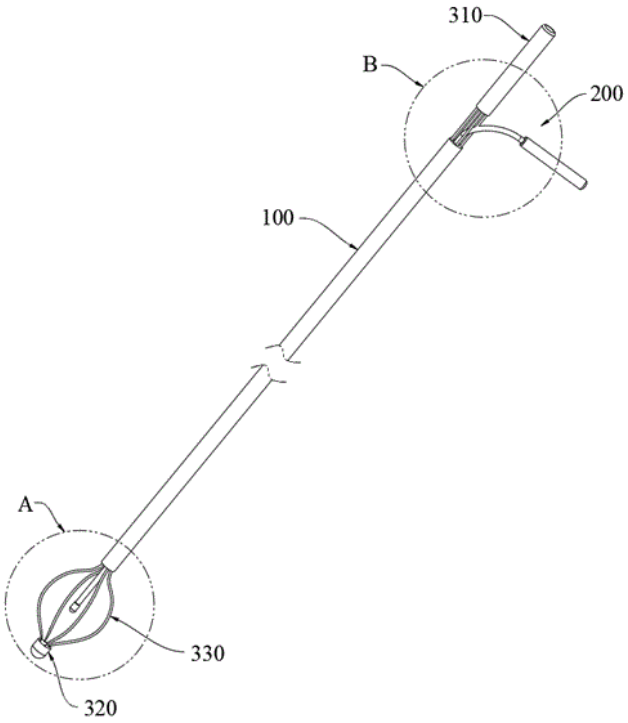

21: 2026/04075. 22: 2026/04/15. 43: 2026/11/12
51: G06F; H01H
71: MNISI, Seth Sibakuza
72: MNISI, Seth Sibakuza
54: SMART ELECTRIC ENERGY DISTRIBUTION SYSTEM
00: -
A distributed smart energy system is disclosed comprising a plurality of relay nodes, a central controller, and a wireless communication subsystem. Each relay node includes non-volatile configuration storage, a local schedule engine, and firmware level safety interlocks. Relay nodes broadcast metadata using a non-blocking discovery protocol, enabling dynamic registry construction and configuration synchronization. A hierarchical override mechanism prioritizes manual commands over group and scheduled commands. Time harmonization is achieved through periodic synchronization packets from the controller. Relay nodes continue operating during network outages, controller downtime, and power interruptions. A mobile application provides orchestration, scheduling, device setup, and group control. The system supports multi controller coordination across distributed clusters.

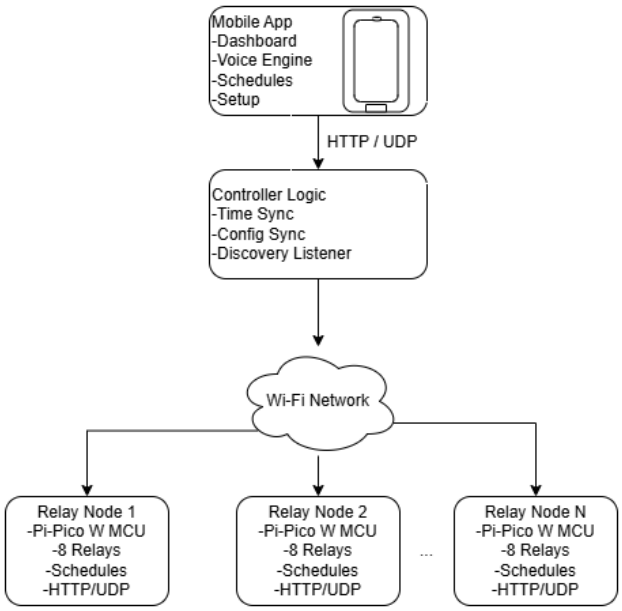

21: 2026/04076. 22: 2026/04/15. 43: 2026/11/12
51: A01D
71: Jinhua University of Vocational Technology
72: BAI, Dongming, LIAO, Ziyu, SHEN, Jingyi, JIANG, Le, QIN, Xuhuan
54: TEA PLUCKING DEVICE
00: -
The present invention discloses a tea plucking device, and relates to the technical field of tea plucking. The tea plucking device includes a wearable mechanism, a mechanical arm, a gripping mechanism, a rolling brush mechanism, a hook mechanism, a pan-tilt camera and a display screen, where the mechanical arm is disposed on the wearable mechanism; the gripping mechanism is configured to grip and release tea leaves; an air passage is formed in the mechanical arm, an air outlet of the air passage is disposed at an end of the mechanical arm, an air pump delivers air to the air passage, and the air outlet outputs the air; the rolling brush mechanism is configured to brush away impurities, the hook mechanism is configured to hook impurities, and the pan-tilt camera is capable of capturing images; and the display screen is capable of displaying the images collected by the pan-tilt camera.

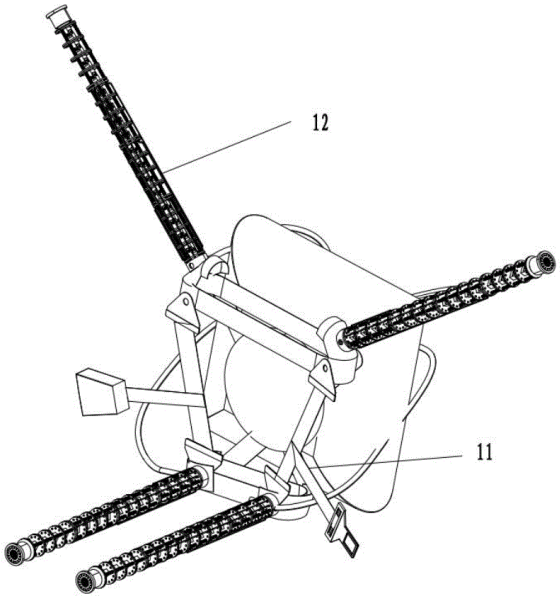

21: 2026/04125. 22: 2026/04/16. 43: 2026/11/16
51: E21F
71: SHANDONG QIUJI COAL MINE CO., LTD., SHANDONG HAOKUN MINING VENTILATION AND SAFETY ENGINEERING CO., LTD.
72: BAI, Dongdong, JIA, Dongxiu, GE, Zhenhai, ZHOU, Jingkai, LIN, Zeng, WANG, Mingxing, YANG, Zhenyu, ZHANG, Shuai, CHANG, Xiaofeng, HE, Shuai, LUO, Longhua, ZHOU, Ruilong, LI, Jianjun, JIA, Lizeng, SUN, Bingqian, WEI, Lei
33: CN 31: 2026103860106 32: 2026-03-27
54: VENTILATION DEVICE FOR COAL MINE EXCAVATION WORKING FACE
00: -
The invention relates to ventilation device technology and discloses a ventilation device for a coal mine excavation working face. The device comprises a base, a support rod fixed on the base, and a ventilation box arranged on the support rod. An adjusting component is arranged in the support rod to drive the ventilation box to move up and down, enabling the ventilation height to match changes in the excavation working face and effectively eliminate ventilation blind spots. An installation component is arranged to allow the top of the ventilation box to be opened, facilitating convenient removal, cleaning, and replacement of a filter screen, thereby reducing maintenance downtime. Moving wheels are arranged at the bottom of the base to enable flexible movement and positioning of the device within a tunnel, improving adaptability and operational efficiency in confined underground working environments.

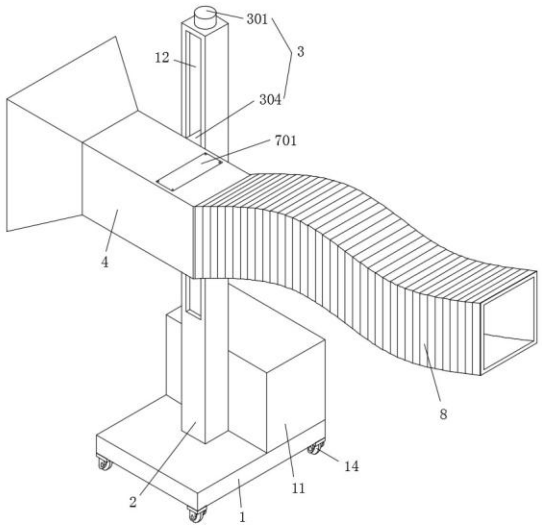

21: 2026/04126. 22: 2026/04/16. 43: 2026/11/16
51: G06F
71: LANZHOU JIAOTONG UNIVERSITY
72: SHENG, Yucen, RAO, Juan, MOU, Yiwu
33: CN 31: 2025109739407 32: 2025-07-15
54: BILINGUAL LANGUAGE PROFICIENCY ASSESSMENT METHOD, SYSTEM, DEVICE, AND MEDIUM
00: -
Disclosed is a bilingual language proficiency assessment method, system, device, and medium, relating to the field of language ability assessment technology. The method comprises: extracting time series and seven morphological features corresponding to each brain region in the brain language network of a sample individual; Construct a dynamic functional connectivity matrix for each time point by using the time series of each brain region in the brain language network as input for the AR-DCC model; Calculate the dynamic functional connectivity strength of each pair of brain regions and the Pearson correlation coefficient between the corresponding seven morphological feature values, and construct a morphological similarity network matrix; Predicting second language proficiency based on the dynamic functional connectivity strength of each pair of brain regions and the dynamic coupling characteristics of each brain region; This method improves the reliability and accuracy of second language proficiency

assessment results based on two dynamic characteristics.

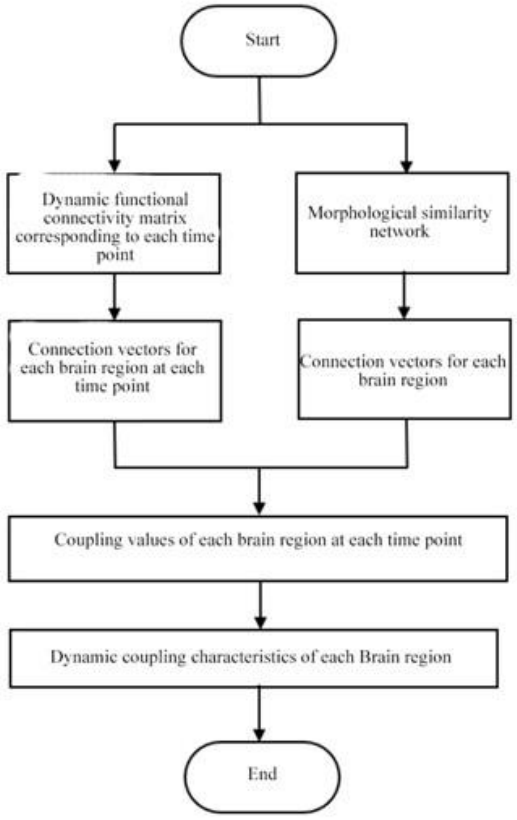

21: 2026/04127. 22: 2026/04/16. 43: 2026/11/16
51: H04B
71: NORTHWESTERN POLYTECHNICAL UNIVERSITY
72: ZHANG, Hao, XU, Wenjie, YANG, Kunde, YU, Ting, ZHANG, Tao, LI, Xuan, REN, Zhiyuan
33: CN 31: 2025108150715 32: 2025-06-18

54: WAVEGUIDE/SCATTERING MODE DISCRIMINATION METHOD BASED ON EVAPORATION DUCT HEIGHT

00: -

The present disclosure relates to radio communication technology and discloses an evaporation duct and troposcatter mode discrimination method based on evaporation duct height. The method comprises setting an interval for a critical evaporation duct height corresponding to switching of communication modes and defining a threshold for the interval length. A midpoint of the interval is taken as an initial value, and iterative calculation is performed when the interval length exceeds the threshold. An abscissa of an intersection point of radio wave propagation path loss under evaporation duct and troposcatter modes is calculated to obtain a final critical value. A predicted evaporation duct height value is compared with the final value to determine the communication mode. The method enables accurate discrimination between evaporation duct and troposcatter modes, improves adaptability to dynamic environmental changes, and provides a basis for optimizing maritime over-the-horizon communication system performance.

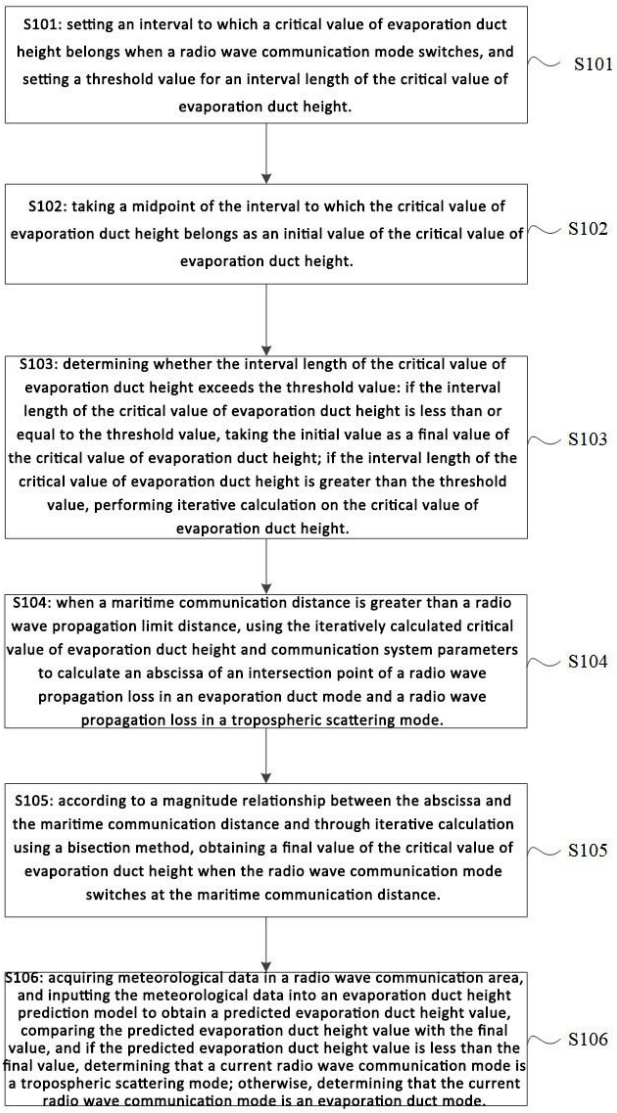

21: 2026/04129. 22: 2026/04/16. 43: 2026/11/16
51: G08B
71: VISHWAKARMA INSTITUTE OF TECHNOLOGY

72: RAJURKAR, Avadhoot Umakant, CHINCHANIKAR, Satish Suresh, KOTWAL, Girish Narayan, JAIN, Nishka, MULMULE, Vedant, PRAKASH, Pratik, MUKKAWAR, Ketan, PADLEWAR, Parth

54: AN IOT-ENABLED MULTI-SENSOR GAS LEAK DETECTION SYSTEM

00: -

The present invention is related to an IoT-enabled multi-sensor gas leak detection system. The Internet of Things (IoT)-enabled multi-sensor gas leak detection system combines a GPS module, a microcontroller, and MQ-series sensors (MQ-2, MQ-5, and MQ-135) to provide early, graded detection of toxic and flammable gases in residential and small-scale industrial pipelines. When thresholds are surpassed, the microcontroller sends time-stamped sensor and GPS telemetry to a cloud dashboard (ThingsBoard/Thingspeak) for remote monitoring and historical logging. It also uses a rule-based fusion algorithm with hysteresis and trend detection to minimize false positives. The system is inexpensive, modular, and has been validated in controlled tests that demonstrate dependable classification of small, medium, and large leaks with response times under 6 s.

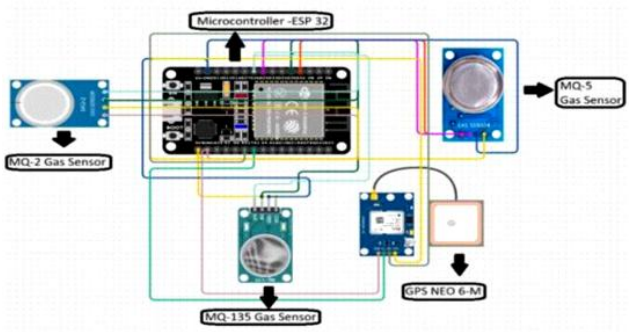

21: 2026/04130. 22: 2026/04/16. 43: 2026/11/16

51: G05B

71: VISHWAKARMA INSTITUTE OF TECHNOLOGY

72: GAIKWAD, Vidya Shrimant, MISHRA, Vaishali, AMBHORE, Nitin, WANKHED, Disha Sushant, MORTI, Ananya Mahadev, CHAPE, Pralhad Shivaji, KURLE, Nandini Prasanna, KORE, Vedika Nayaku

54: A CLOUD CONNECTED MULTI SENSOR PREDICTIVE MAINTENANCE SYSTEM FOR DC MOTORS

00: -

The present invention relates to a cloud-connected, multi-sensor predictive maintenance platform for DC motors that integrates Internet of Things (IoT) technology with machine learning for real-time condition monitoring and fault prediction. The system employs an ESP8266 microcontroller interfaced with multiple sensors, including current, voltage, temperature, humidity, vibration, and RPM sensors, to continuously acquire operational data from a DC motor. The collected data is transmitted via an MQTT-based publish–subscribe communication protocol to a cloud server, where synchronized multi-sensor records are generated and stored. A trained Random Forest machine learning model processes the aggregated data to classify the motor's operational state into Normal, Fault, or Failure conditions with high accuracy. The system further provides a real-time dashboard for visualization of live telemetry, historical trends, and predictive alerts, enabling proactive maintenance decisions. Additionally, the platform supports automated control actions such as motor slowdown or shutdown in response to detected anomalies. The invention offers a scalable, low-cost, and efficient solution for predictive maintenance in industrial applications, reducing downtime and improving operational reliability.

21: 2026/04131. 22: 2026/04/16. 43: 2026/11/16

51: A61B

71: VISHWAKARMA INSTITUTE OF TECHNOLOGY

72: SULTANPURE, Kavita A., JADHAV, Deepali S., KALSHETTI, Aishwarya Rajkumar, KELZARKAR, Tanvi Bandu, KHARCHE, Vedant Ramesh, KAPSE, Nikita Yashwant, KAMBLE, Tanmay Nandkishor

54: A SYSTEM FOR INTEGRATED FINGERPRINT-BASED BLOOD GROUP DETERMINATION AND REAL-TIME MULTI-PARAMETER PHYSIOLOGICAL MONITORING

00: -

The invention relates to a system for integrated fingerprint-based blood-group determination and real-time multi-parameter physiological monitoring. The system comprises a fingerprint-based blood-group prediction subsystem with an optical or capacitive sensor module, image preprocessing, feature extraction, dimensionality reduction and machine learning–based classification engine for ABO and Rh-label prediction; an integrated physiological sensor unit including ECG sensor module, pulse oximeter probe and body-temperature

sensor; a central processing and communication module with microcontroller for signal preprocessing, data aggregation into JSON frames and secure transmission via MQTT/TLS or HTTPS; a cloud-based analytical platform with time-series database and analytics; an AI-driven conversational agent module; and a web/mobile user interface and report generation module enabling real-time display and external health record integration.

21: 2026/04132. 22: 2026/04/16. 43: 2026/11/16
51: G06T
71: VISHWAKARMA INSTITUTE OF TECHNOLOGY
72: WAGHMODE, Shubham, DEULKAR, Siddharth, SUTAR, Gaurav, SUTAR, Prashant, GAIKWAD, Vidya, WANKHEDE, Disha Sushant, CHAVHAN, Pranali G., TIWASKAR, Shweta

54: A HYBRID MATHEMATICAL ANIMATION SYSTEM USING PROPERTY-BASED OBJECT IDENTIFICATION AND REAL-TIME SYNCHRONIZATION

00: -

The present invention, titled “Animat: Hybrid Mathematical Animation System Using Property-Based Object Identification and Real-Time Synchronization,” discloses an advanced animation framework designed for mathematical and geometric visualization. The system integrates a high-performance C++ backend with a Qt6 QML-based rendering frontend to enable efficient and real-time animation generation. A key innovation lies in the Property-Based Object Identification mechanism, wherein graphical objects are dynamically constructed using modular property containers instead of rigid inheritance hierarchies, thereby enhancing extensibility and flexibility. The invention further introduces a hybrid interaction model combining a Regex-based command parser with a direct-manipulation graphical user interface (GUI), both synchronized through a real-time signal-slot mechanism. This enables seamless bidirectional updates between script-based inputs and visual representations. Additionally, a Virtual Group (VGroup) architecture optimizes rendering performance by sharing visual properties across multiple objects, allowing complex scenes to be rendered at high frame rates. A Value Tracker system enables dynamic, data-driven animation through real-time evaluation of mathematical expressions. Collectively, the system provides an intuitive yet precise platform for creating scalable, high-quality educational animations in STEM domains.

21: 2026/04133. 22: 2026/04/16. 43: 2026/11/16
51: G06Q
71: VISHWAKARMA INSTITUTE OF TECHNOLOGY
72: BARHATE, Neeraj, BAWANTHADE, Snehal, BHALERAO, Anushka, BIJJARGI, Vedant, GAIKWAD, Vidya Shrimant, KARNIK, Madhuri Prashant, WANKHEDE, Disha Sushant, TIWASKAR, Shweta

54: AN INTELLIGENT SYSTEM FOR CROSS-DOCUMENT LEGAL ANALYSIS USING HYBRID RAG

00: -

The present invention discloses an intelligent system for cross-document legal analysis using a hybrid Retrieval-Augmented Generation (RAG) framework. The system integrates Artificial Intelligence, Natural Language Processing, and semantic retrieval techniques to automate the extraction, comparison, and contextual analysis of legal documents. It enables simultaneous processing of multiple legal documents by converting text into vector embeddings and dynamically merging vector stores to facilitate unified cross-document reasoning. A key feature of the invention is a three-stage precedent discovery pipeline comprising AI-driven legal entity extraction, automated Boolean query construction, and semantic re-ranking of retrieved case laws from external legal databases. This approach ensures accurate and contextually grounded retrieval of judicial precedents, minimizing hallucinations in generated responses. The system further incorporates hybrid retrieval combining dense vector search, sparse keyword matching, and rule-based extraction for improved relevance. Additionally, a session management and caching mechanism optimizes computational efficiency by reducing redundant processing and external API calls. The invention provides measurable reliability through groundedness and relevance scoring metrics, ensuring verifiable and explainable outputs. The system is particularly suited for legal professionals, enabling efficient legal research, cross-document comparison, and automated insight generation,

thereby significantly reducing time, cost, and manual effort in legal analysis.

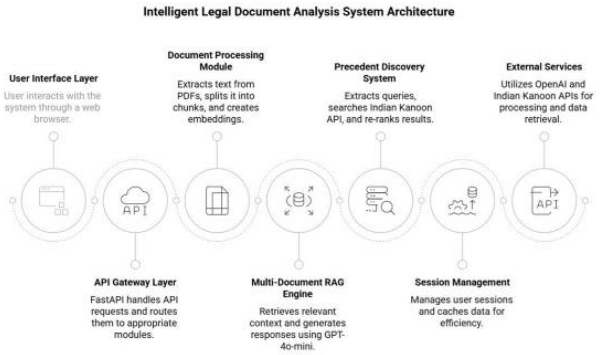

21: 2026/04134. 22: 2026/04/16. 43: 2026/11/16
51: G06T
71: VISHWAKARMA INSTITUTE OF TECHNOLOGY
72: GATHE, Tanvi, AWATE, Aditi, NARAYANKAR, Kallappa, PAWAR, Rahul, GHULE, Vijaykumar R.

54: A CT-TO-MRI BRAIN SCAN GENERATION SYSTEM

00: -

The present invention relates to an artificial intelligence-based medical imaging system for generating MRI-equivalent brain images from computed tomography (CT) scans using a conditional Generative Adversarial Network (GAN), specifically a Pix2Pix architecture. The system employs a U-Net-based generator to translate CT images into high-quality synthetic MRI images and a Patch GAN discriminator to ensure structural and visual realism. The invention further integrates an evaluation module that assesses soft-tissue reconstruction accuracy and provides a confidence score indicating the reliability of generated outputs for clinical use. The proposed system addresses the limitations of CT imaging in soft-tissue visualization and eliminates dependency on conventional MRI scans in cases where MRI is inaccessible, costly, or contraindicated due to metallic implants. By enabling rapid, cost-effective, and non-invasive MRI-like imaging, the invention enhances diagnostic capabilities, improves clinical decision-making, and expands access to advanced neuroimaging in resource-constrained environments.

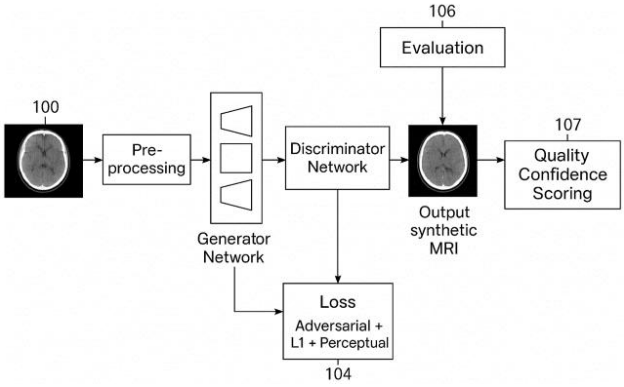

21: 2026/04135. 22: 2026/04/16. 43: 2026/11/16
51: G06F
71: VISHWAKARMA INSTITUTE OF TECHNOLOGY
72: MUKDAM, Kaustubh Devidas, KHARATE, Om Shravan, KHATAL, Ayush Satish, KHEDKAR, Samarth Shivaji, GAIKWAD, Vidya Shrimant, WANKHEDE, Disha Sushant, KARNIK, Madhuri Prashant, CHAVHAN, Pranali G.

54: A SYSTEM FOR AUTOMATED EVOLUTIONARY OPTIMIZATION OF HIERARCHICAL PROMPTS FOR LANGUAGE MODELS

00: -

The present invention relates to an automated evolutionary optimization system for generating and refining hierarchical prompts for Large Language Models (LLMs). The system introduces a structured framework that decomposes prompts into modular components, referred to as a hierarchical genome representation, comprising elements such as persona, approach, requirements, style, output format, and execution strategy. These components are iteratively optimized using an evolutionary algorithm. The invention incorporates a meta-learning module that tracks historical performance of prompt components and biases selection toward high-performing elements, thereby accelerating convergence. An adaptive mutation rate controller dynamically adjusts mutation probability based on evolutionary progress to balance exploration and exploitation without manual intervention. A multi-objective evaluation framework assesses candidate prompts based on quality, efficiency, security, and novelty, while a staged evaluation pipeline reduces computational cost by progressively filtering weaker candidates. The system enables smaller language models to achieve performance comparable to larger models through optimized instruction design, without

requiring model retraining. By automating prompt engineering and improving efficiency, scalability, and interpretability, the invention provides a cost-effective solution for deploying high-performance AI systems across various applications.

21: 2026/04136. 22: 2026/04/16. 43: 2026/11/16
51: G06F
71: VISHWAKARMA INSTITUTE OF TECHNOLOGY
72: AGRAWAL, Chetan Ramanlal, KETKAR, Aryan Shripad, AGRAWAL, Manthan Pavan, AGARKAR, Shriraj Anant, GAIKWAD, Vidya Shrimant, KARNIK, Madhuri Prashant, WANKHEDE, Disha Sushant, CHAVHAN, Pranali G.

54: AN AI ENABLED CONTEXT SPECIFIC CONTRACT MANAGEMENT SYSTEM

00: -

The present invention relates to an artificial intelligence-enabled contract management platform designed to automate and enhance the analysis, drafting, and understanding of legal contracts in a context-specific manner. The system integrates domain-adapted Natural Language Processing (NLP) models, including a Legal-BERT classifier trained on Indian legal corpora, with a hybrid risk assessment engine combining probabilistic AI outputs and deterministic rule-based logic. The platform processes uploaded legal documents by segmenting them into clauses, classifying each clause, and evaluating associated risks using a multi-layered scoring mechanism. It further incorporates semantic precedent retrieval using vector embeddings and approximate nearest neighbor search to identify relevant judicial decisions based on conceptual similarity. An abstractive summarization module simplifies complex legal language into user-friendly explanations, while a multilingual and voice-enabled interface enhances accessibility for diverse users. The invention operates through a centralized architecture that supports real-time analysis, visualization through risk heatmaps, and recommendation of safer alternative clauses. By combining explainable AI, jurisdiction-specific training, and integrated legal research capabilities, the system significantly reduces contract review time, improves accuracy, and democratizes access to legal understanding for both professionals and non-experts.

21: 2026/04138. 22: 2026/04/16. 43: 2026/11/16
51: G09B
71: VISHWAKARMA INSTITUTE OF TECHNOLOGY
72: THORAT, Bhagwan Dinkar, MAHALLE, Parikshit, KADAM, Om Vikas, KADAM, Partha Jalindar, KADU, Ram Santosh, KATKADE, Pushkar Dattu, KALE, Sumit Nandu

54: AN INTELLIGENT AND AUTOMATED ASSESSMENT SYSTEM FOR SUSTAINABLE TEACHING AND LEARNING

00: -

The present invention relates to an intelligent and automated assessment framework designed to enhance the efficiency, accuracy, and scalability of academic evaluation. The system integrates advanced Artificial Intelligence (AI) techniques, specifically Natural Language Processing (NLP), to perform semantic analysis of student responses and assess their conceptual understanding rather than relying on traditional keyword-based methods. The framework operates as a web-based platform consisting of a frontend interface, a backend server, and an AI-powered grading engine. Teachers upload assessment rubrics that define evaluation criteria, and student submissions are processed through a scalable architecture employing task queues and worker processes. A dedicated AI module, utilizing transformer-based models, compares student responses with the rubric at a conceptual level to generate accurate scores and detailed feedback. The system also supports Optical Character Recognition (OCR) for processing handwritten submissions and provides real-time dashboards for both students and educators. A manual override feature ensures teacher control over final grading decisions. By delivering instant, objective, and consistent evaluation, the invention significantly reduces grading time while improving learning outcomes. The proposed framework is highly scalable, adaptable to diverse educational contexts, and promotes sustainable digital assessment practices, making it suitable for schools, higher education institutions, online learning platforms, and large-scale examination systems.

21: 2026/04139. 22: 2026/04/16. 43: 2026/11/16
51: G06F
71: VISHWAKARMA INSTITUTE OF TECHNOLOGY
72: MITTEWAD, Samiksha Ganesh, MARATHE, Suyog Narendra, MASAL, Ankita Vikas, MORWAL, Ayush Satish, TIWASKAR, Shweta, SHINDE, Sandeep Ramrao, WANKHED, Disha, GAIKWAD, Vidya, CHAVHAN, Pranali
54: A GEOSPATIAL WILDLIFE MONITORING AND AUTOMATED ALERT SYSTEM
00: -
Wild Guard DB is an intelligent geospatial wildlife monitoring and automated alert system designed to enhance wildlife protection through real-time tracking and early threat detection. The invention integrates Internet of Things (iot) devices, embedded camera systems, artificial intelligence, and geospatial database technology to monitor animal movement in high-risk and sensitive regions. The system utilizes a Passive Infrared (PIR) sensor to detect motion based on thermal radiation emitted by animals. Upon detection, an ESP32 microcontroller integrated with an OV2640 camera module captures images, while a GPS module simultaneously records precise geographic coordinates. The captured data is processed using an AI-based vision model to identify the animal species and classify its category. The generated alerts, including animal identity, location coordinates, and timestamp, are transmitted through Wi-Fi or GSM networks to ensure reliable communication in remote areas. A postgresql database with postgis extension is used to store and manage geospatial data, enabling real-time monitoring, spatial analysis, and efficient alert distribution through a multi-database architecture. The system further provides a web-based dashboard for visualization, alert management, and coordinated response by authorities. By combining affordability, scalability, and intelligent behavior-based analysis, the invention offers an effective solution for preventing poaching, reducing human–wildlife conflict, and supporting wildlife conservation efforts.

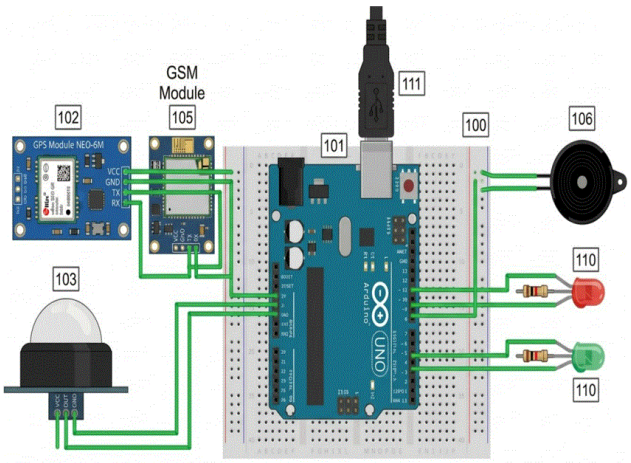

21: 2026/04140. 22: 2026/04/16. 43: 2026/11/16
51: A61B
71: VISHWAKARMA INSTITUTE OF TECHNOLOGY
72: KHAIRNAR, Yashkumar Dadaji, AMBHORE, Nitin Hiraman, BHADANE, Shivam Milind, MACHE, Ashok Rangnath, CHINCHANIKAR, Satish Suresh, KAPSE, Atharva Kailas, DESALE, Yashwardhan Nileshkumar, BHAGA, Rajkumar Kishor
54: A MULTI-MODAL ROBOTIC SOLDERING SYSTEM WITH ADAPTIVE CONTROL INTERFACE
00: -
The present invention is related to a multi-modal robotic soldering system with adaptive control interface. The invention relates to a low-cost, multi-modal robotic soldering system comprising a lightweight foam-board-based articulated arm actuated by MG996R servo motors and controlled by an Arduino Uno microcontroller interfaced via USB to a host computer running a web-based dashboard. The system integrates three user control modalities voice recognition through a microphone array, computer-vision-based hand-gesture detection using OpenCV and MediaPipe, and manual coordinate entry for X–Y–Z positioning enabling seamless switching between modes and achieving positional accuracy within ±0.5 mm. Adaptive learning algorithms refine motion trajectories and soldering parameters using positional and thermal feedback, thereby improving consistency across successive operations. The system's modular construction, intuitive multi-modal interface, and real-time monitoring provide an accessible solution for precision electronics manufacturing, research

laboratories, educational training, and quality-control environments.

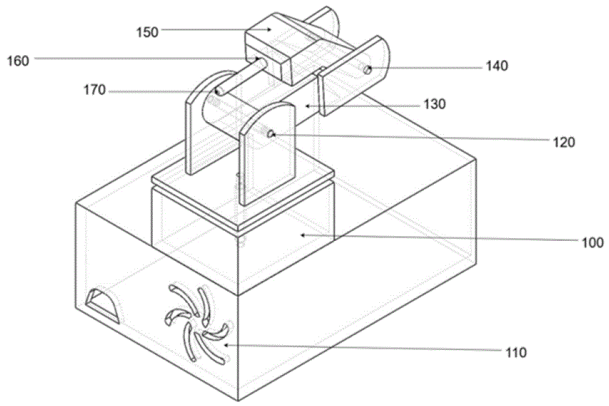

21: 2026/04272. 22: 2026/04/20. 43: 2026/11/11
51: E06B
71: LOUVER-LITE LIMITED
72: GREENING, Andrew
33: GB 31: 2314718.4 32: 2023-09-26
54: WINDOW BLIND HEADRAIL WITH AN EXTRUDED POLYMERIC BODY
00: -
A window blind headrail comprising an extruded polymeric body which defines a top wall and a front wall, wherein the polymeric body includes a brace element which is connected to both the front wall and the top wall via spaced apart brace connectors; and wherein the polymeric body further includes a mounting portion which is connected to the top wall via a plurality of spaced apart mounting connectors.

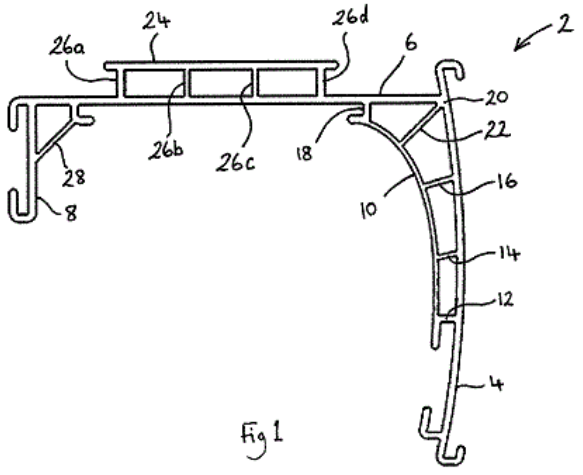

Fig 1

21: 2026/04328. 22: 2026/04/21. 43: 2026/10/29
51: B02C; C04B
71: THYSSENKRUPP POLYSIUS GMBH, THYSSENKRUPP AG, SCHWENK ZEMENT GMBH & CO. KG
72: Michael WILCZEK, Hendrik MÖLLER, Andreas HAMM, Oliver MAIER, Matthias WUWER
33: DE 31: 10 2023 133 379.8 32: 2023-11-29
33: LU 31: LU505651 32: 2023-11-29
54: MECHANO-CHEMICAL ACTIVATION OF MINERAL MATERIALS
00: -
The present invention relates to the selection of the size of a grinding mill for the economically reasonable mechano-chemical activation in particular of clays, for example in the cement industry.

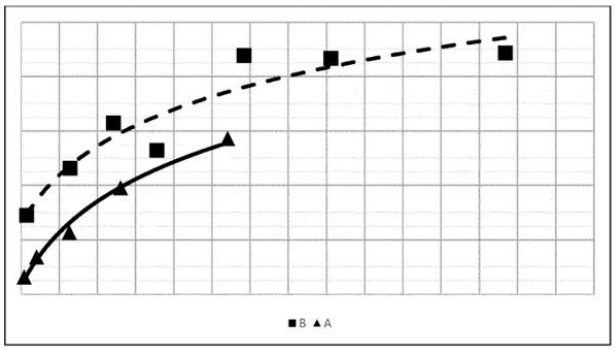

21: 2026/04400. 22: 2026/04/22. 43: 2026/10/29
51: B02C; C04B
71: THYSSENKRUPP POLYSIUS GMBH, THYSSENKRUPP AG, SCHWENK ZEMENT GMBH & CO. KG
72: Michael WILCZEK, Hendrik MÖLLER, Andreas HAMM, Oliver MAIER, Eike WILLMS, Luc RUDOWSKI
33: DE 31: 10 2023 133 383.6 32: 2023-11-29
33: LU 31: LU505653 32: 2023-11-29
54: DEVICE AND METHOD FOR A TEMPERATURE-OPTIMIZED MECHANOCHEMICAL ACTIVATION
00: -
The invention relates to a device for mechanically activating a mineral material. The device has a mill (10), said mill (10) having a drive (20). The device has at least one first temperature-detecting element (30), said first temperature-detecting element (30) being positioned in or on the mill (10), and the device has a controller (40), wherein the device has a material feed (50) for supplying milling material to the mill (10), the controller (40) is connected to the first temperature-detecting element (30) in order to transmit the detected temperature, and the controller

(40) is connected to the drive (20) in order to control the drive power and to the material feed (50) in order to control the supplied quantity of milling material.

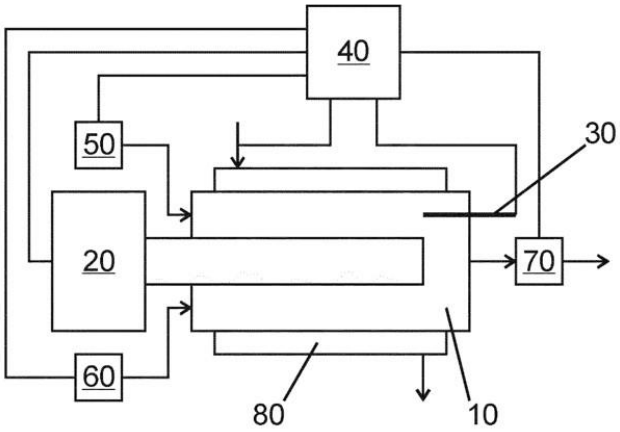

Fig. 1

21: 2026/04601. 22: 2026/04/29. 43: 2026/10/12
51: F04B; F25D; G05B
71: SHANHAI APOLLO MACHINERY CO., LTD.
72: LU, Jinqi
33: CN 31: 202311307064.1 32: 2023-10-10
54: METHOD FOR CONTROLLING CIRCULATING WATER SYSTEM OF NUCLEAR POWER PLANT
00: -
Disclosed is a method for controlling a circulating water system of a nuclear power plant. The method comprises: determining a set rotational speed of a motor of a circulating water pump based at least on first temperature detection data at a seawater inlet of the circulating water system, and a target value for a condenser temperature change; driving, via a high-voltage variable frequency device, the motor of the circulating water pump to rotate based on the determined set rotational speed of the circulating water pump, so as to supply seawater to the condenser, thereby allowing the seawater to exchange heat with a fluid flowing through a secondary circuit of the nuclear power plant at the condenser; obtaining second temperature detection data at an outlet of the condenser, so as to determine whether a difference between the second temperature detection data and the first temperature detection data matches the target value for the condenser temperature change; and in response to determining a mismatch, adjusting the rotational speed of the motor of the circulating water pump via the high-voltage variable frequency device. Thus, the energy consumption of the circulating cooling system of the nuclear power plant can be significantly reduced while the cooling demand of the system can be precisely matched.

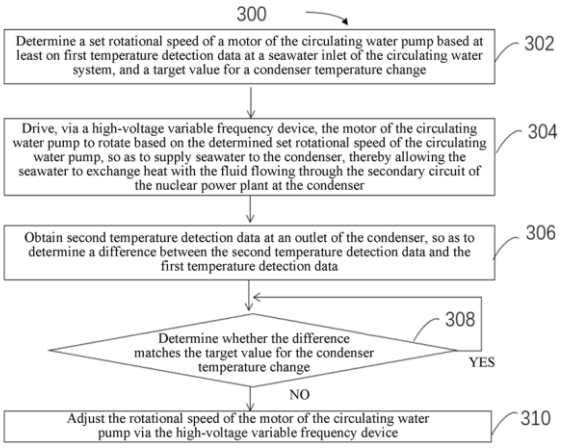

21: 2026/05669. 22: 2026/05/27. 43: 2026/09/18
51: B28C; B65D; E04H
71: HEID AG
72: HEID, Yves
33: CH 31: CH001220/2023 32: 2023-11-03
54: SILOS AND PLANTS FOR THE PRODUCTION OF CONCRETE
00: -
The present invention relates to a silo (100) for the production of concrete, which comprises, inter alia, a main chamber (1) for storing a first, preferably powdery, component and at least one secondary chamber (2) for storing a second, preferably liquid, component. The present invention also relates to a plant (1000) which comprises the silo (100) according to the invention and further comprises a mixer (150) in which the first and the second components can be mixed with one another as aqueous mixtures, in particular continuously, to form concrete, in particular to form lightweight porous concrete, and the finished concrete can be removed therefrom, preferably continuously. The silo (100) according to the invention or the plant (1000) according to the invention enable the production of concrete adapted to the ambient conditions of the silo or the plant, wherein the quantities of the components can be individually dosed. A further subject matter of the invention is a method for producing concrete, in particular lightweight porous concrete also known as foamed concrete, in the plant according to the invention, and the use of the

silo according to the invention for producing concrete, in particular lightweight porous concrete.

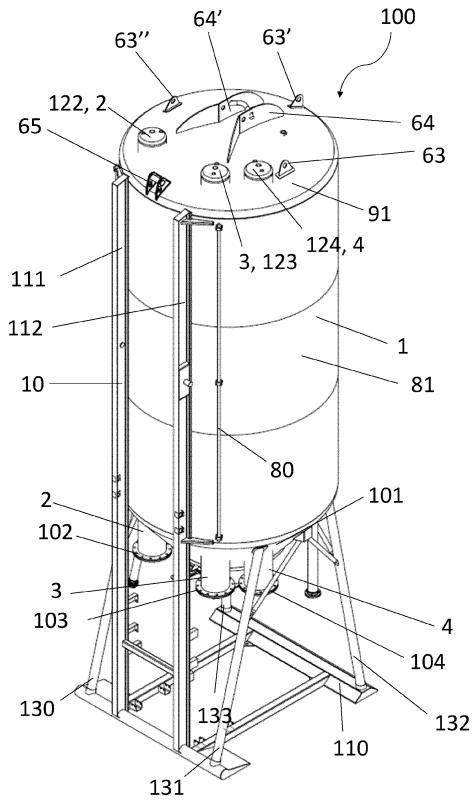

21: 2026/05978. 22: 2026/06/04. 43: 2026/09/11
51: H04W
71: NOKIA TECHNOLOGIES OY
72: KOSKINEN, Jussi-Pekka, TURTINEN, Samuli, Heikki
33: FI 31: 20215926 32: 2021-09-02

54: INITIATING SMALL DATA TRANSMISSION BASED ON ONE OR MORE CONDITIONS SPECIFIC TO DEVICE TYPE

00: -

Disclosed is a method comprising obtaining one or more first conditions for small data transmission, said one or more first conditions being specific to a first device type, wherein the one or more first conditions are different compared with one or more second conditions for small data transmission, said one or more second conditions being associated with a second device type different to the first device type; and initiating, if the one or more first conditions are fulfilled, a small data transmission procedure, while in a radio resource control inactive state or idle state.

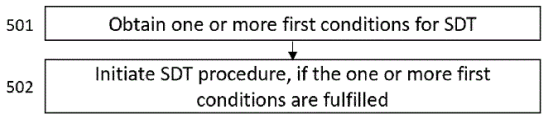

21: 2026/06578. 22: 2026/06/24. 43: 2026/08/28
51: G06F; G06Q; H04L
71: LUTEREK, January, Janusz
72: LUTEREK, January, Janusz
33: ZA 31: 2025/10198 32: 2025-11-28

54: SECURE READ-ONLY AUTHENTICATION FOR BANK ACCOUNT INSPECTION

00: -

The invention provides a computer-implemented method for secure bank account access on a client device running a banking application or accessing online banking on a bank server and having a processor, a runtime memory, a first keystore, and a second keystore separate from the first keystore comprises receiving, by the processor, an authentication factor to open the banking application or log into the online banking; displaying, by the processor, a general menu of selectable access levels within a secure environment of the banking application upon verifying the authentication factor, the selectable access levels comprising a read-only inspection level, an existing-beneficiary payment level, a new-beneficiary creation level, a once-off payment level, and a general transaction level; receiving, by the processor, a selection of one of the selectable access levels from the general menu and a corresponding level-specific authentication factor within the secure environment of the banking application or the online banking server, wherein biometric identification is excluded for accessing the selectable access levels; establishing, by the processor, a mutually exclusive read-only inspection state upon receiving the selection of the read-only inspection level and a first level-specific authentication factor, wherein the establishing comprises blocking loading of transaction-signing cryptographic keys and transaction authorization modules into the runtime memory or the online banking server; and establishing, by the processor, a mutually exclusive banking access state upon receiving the selection of the general transaction level and a second level-specific typed-in password, wherein the establishing comprises loading the transaction-signing cryptographic keys and the transaction authorization modules into the runtime

memory. This provides the technical advantage of establishing a sequential, keyboard-entry-driven authentication pipeline that secures distinct operational states of the banking application without relying on biometric sensors. The invention extends to a system for implementing the method.

Figure 1: Flowchart of the Segmented Authentication Method

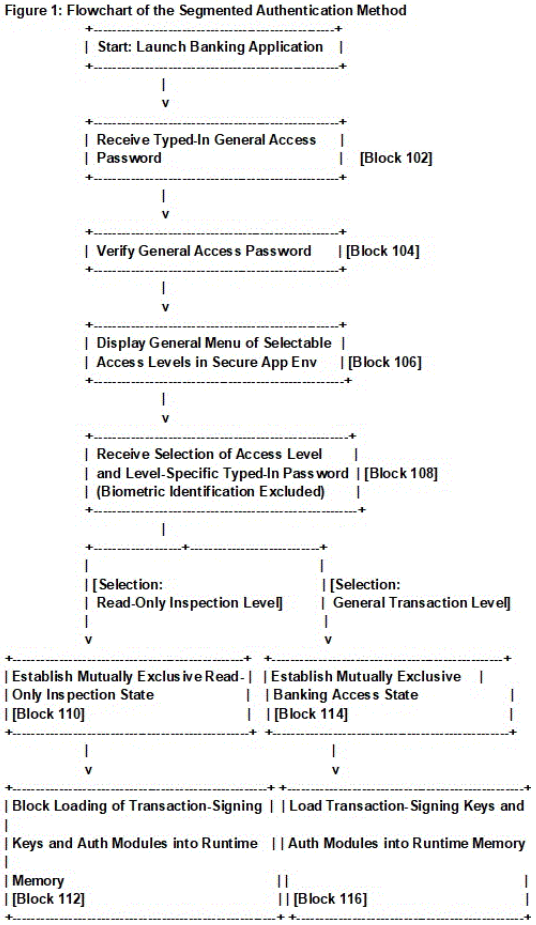

21: 2026/06723. 22: 2026/06/29. 43: 2026/10/12
51: A61F; A61K
71: DBV TECHNOLOGIES
72: VILLETTE, Jérôme, EHOUARN, Pascale
33: US 31: 63/256,803 32: 2021-10-18
33: EP 31: 21306887.7 32: 2021-12-21
54: IMPROVED PATCHES AND METHODS FOR DELIVERING AN ACTIVE SUBSTANCE TO THE SKIN USING THE SAME
00: -
The invention relates to a patch for administering an active substance to the skin of a subject. The present patches simplify manufacture and improve reproducibility of results, facilitate, and enhance the consistency of application of the patches to a subject, and demonstrate improved initial and long-term adhesion with reduced risk of premature detachment.

21: 2026/08212. 22: 2026/08/14. 43: 2026/09/09
51: C07D
71: PGI Drug Discovery LLC, Sumitomo Pharma America, Inc.
72: HANANIA, Taleen G., HEFFERNAN, Michele L.R., JONES, Philip Glyn, XIE, Linghong
33: US 31: 62/368,526 32: 2016-07-29
54: COMPOUNDS AND COMPOSITIONS AND USES THEREOF
00: -
Disclosed are compounds of formula (I), and pharmaceutical compositions containing such compounds. Methods of treating neurological or psychiatric disease and disorders in a subject in need are also disclosed.

(I)

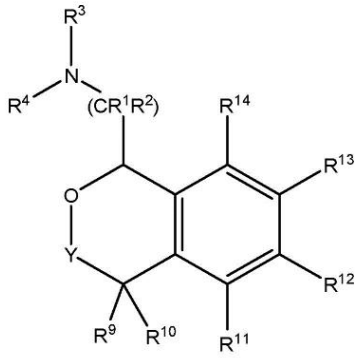

21: 2026/08668. 22: 2026/09/01. 43: 2026/10/27
51: G07C; G08B; G06Q
71: BEUKES, Hendrik Barend Derek
72: GREEFF, Patrick
54: PERSONNEL MONITORING DEVICE AND SYSTEM
00: -
Conduct by personnel (14) is monitored in a monitoring system (10) by emitting an infrared signal from an emitter (16) on a monitoring device (12) worn by individual members of the personnel. The infrared signals are received in stationary cameras (18) and data from the infrared signals are recorded along with audio recorded in a microphone (17) on the monitoring device (12) and video recorded by the cameras (18).

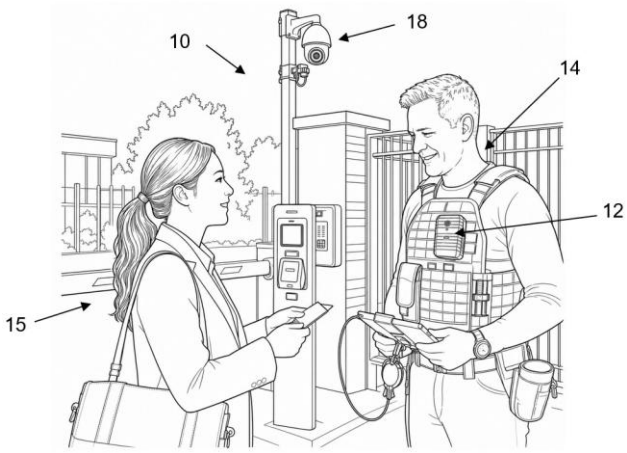

21: 2026/09215. 22: 2026/09/18. 43: 2026/10/27
51: H04W
71: OFINNO, LLC
72: BAYKAS, Tuncer, KIM, Jeongki, DINAN, Esmael Hejazi, LANANTE, Leonardo Alisasis, ERKUCUK, Serhat, ZHANG, Jiayi
33: US 31: 63/571,046 32: 2024-03-28
54: STATION TRANSITION CANCELLATION
00: -
A station (STA) transmits to a first access point (AP) a first frame indicating a transition by the STA from the first AP to a second AP. The STA receives from the first AP, a second frame indicating acceptance of the transition. Before receiving a third frame tearing down a link between the STA and the first AP, the STA transmits to the first AP a fourth frame cancelling the transition. In another aspect, the STA receives from the AP a fifth frame indicating a duration that the link between the STA and the first AP remains setup after the STA receives from the first AP the second frame indicating acceptance of the transition by the STA from the first AP to the second AP. The STA transmits the fourth frame within the duration.

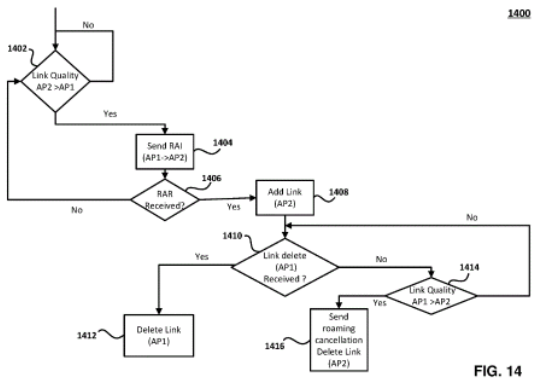

FIG. 14

21: 2026/09230. 22: 2026/09/21. 43: 2026/09/28
51: B22F
71: SHANGHAI HEWEI INDUSTRY CO., LTD.
72: Yaochun He, Chunliu Zhang, Guanghua Luo, Fu Shuai, Qihai Tang, Wenqing Xiong, Qian Zhang
54: A POWDER METALLURGY EQUIPMENT
00: -
This application relates to a powder metallurgy equipment, including a machine platform, a stamping mechanism, a powder pouring mechanism, a lifting mechanism, and a heating mechanism. The machine platform is equipped with a feeding mechanism, inside which a mold is placed. The stamping mechanism is located on the machine platform, with at least a portion above the mold. The stamping mechanism is used to stamp metal powder inside the mold. At least a portion of the powder pouring mechanism is slidably located on the machine platform and can slide above the mold to pour metal powder into the mold. The lifting mechanism is located at the end of the machine platform away from the stamping mechanism. The feeding mechanism can push the mold to the lifting mechanism, and the lifting mechanism can drive the mold to slide away from the machine platform along its height direction. The heating mechanism is located on the side of the machine platform away from the powder pouring mechanism. The powder pouring mechanism can transport the mold into the heating mechanism, so that the mold and the part move together while pressure is maintained inside the mold, thereby improving the processing effect.

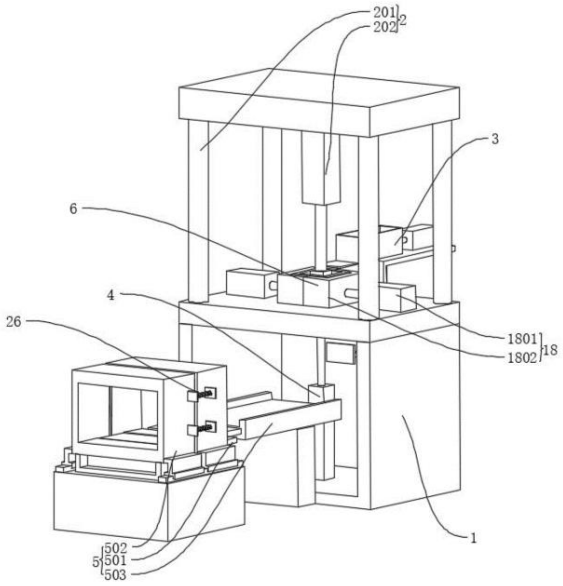

21: 2026/09363. 22: 2026/09/25. 43: 2026/10/27
51: B01J; C07C; C08G
71: NANKAI UNIVERSITY
72: PANG, Jiandong, ZHANG, Hao, BU, Xianhe, XI, Xiaojuan, LI, Cha
33: CN 31: 202411633724.X 32: 2024-11-15
54: HEXABENZOCORONENE-BASED METAL ORGANIC FRAMEWORK CAPABLE OF DIRECTED MODIFICATION, PREPARATION METHOD THEREFOR AND USE THEREOF
00: -
The present invention provides a directionally modifiable hexabenzocoronene-based metal-organic framework, along with its preparation method and application, pertaining to the fields of metal-organic framework synthesis and photocatalysis. The method involves adding H3BTB, H4BDQDA-R ligand, ZrCl4, and benzoic acid into N,N-dimethylformamide (DMF), thoroughly stirring to dissolve the reactants, and obtaining a crystalline Zr-MOF product after reaction. The resulting crystalline product is collected by centrifugation and washed with fresh DMF and acetone to obtain a pillar-layered Zr-MOF with a homogeneous topological network. In H4BDQDA-R, R represents -NO2, -H, -tBu, -OCH3, -OH, or -NH2. The directionally modifiable hexabenzocoronene-based Zr-MOFs prepared by the invention feature a simple synthesis method and high stability. They can be used in photocatalytic CO2 reduction reactions, and the resulting series of Zr-MOFs exhibit broadly tunable bandgap values, making them excellent photocatalysts.

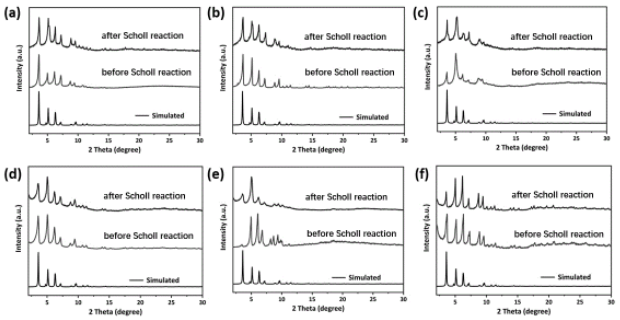

21: 2026/09478. 22: 2026/09/30. 43: 2026/10/27
51: C12N
71: SHANDONG AGRICULTURAL UNIVERSITY
72: Yang YU, Chuanyou LI, Sirui LV, Mingtong ZHAI
33: CN 31: 202511573427.5 32: 2025-10-31
54: METHOD FOR IMPROVING PLANT ROOT REGENERATION CAPACITY AND APPLICATION THEREOF
00: -
The present invention discloses a method for improving plant root regeneration capacity and an application thereof, and belongs to the technical field of plant genetic engineering. The present invention provides, for the first time, experimental evidence that overexpression of the Solyc06g059760 (SEU1) or Solyc06g059750 (SEU2) gene in tomato can significantly enhance its root regeneration capacity. This finding provides a new research tool for elucidating the molecular mechanism of plant root regeneration. The technical concept can be extended to various crops that are difficult to regenerate, helping to establish efficient genetic transformation systems and promote crop genetic improvement.



21: 2026/09742. 22: 2026/10/08. 43: 2026/10/27
51: B23K
71: JINAN ACME CNC EQUIPMENT CO., LTD.
72: NIE, Zhiwei, YU, Yin
33: CN 31: 2024104715420 32: 2024-04-19
54: FEEDING MECHANISM AND PIPE FEEDING DEVICE
00: -

The present invention provides a feeding mechanism and a pipe feeding device, relating to the field of pipe cutting and feeding. The device comprises a frame; an extension arm for conveying pipes is provided on the frame; a rotating unit and a pushing unit are respectively provided in the width direction of the extension arm, and the two are fixedly connected via a first through shaft; a motion conversion mechanism is mounted oppositely on the extension arm and the frame, and is used for coordinating the movement of the rotating unit and the pushing unit; wherein the motion conversion mechanism has a first state and a second state. When the motion conversion mechanism is in the first state, the extension arm is limited, and the rotating unit drives the pushing unit in a linked manner via the first through shaft; when the motion conversion mechanism is in the second state, the first through shaft is clamped tightly, the rotating unit is not linked with the pushing unit, and only drives the extension arm to perform reciprocating motion along the length direction thereof on the frame. The present invention employs the motion conversion mechanism to coordinate the movement of the pushing unit and the feeding unit, completing the adjustment of two degrees of freedom through one drive shaft, thereby simplifying the structure and making the distribution more flexible.

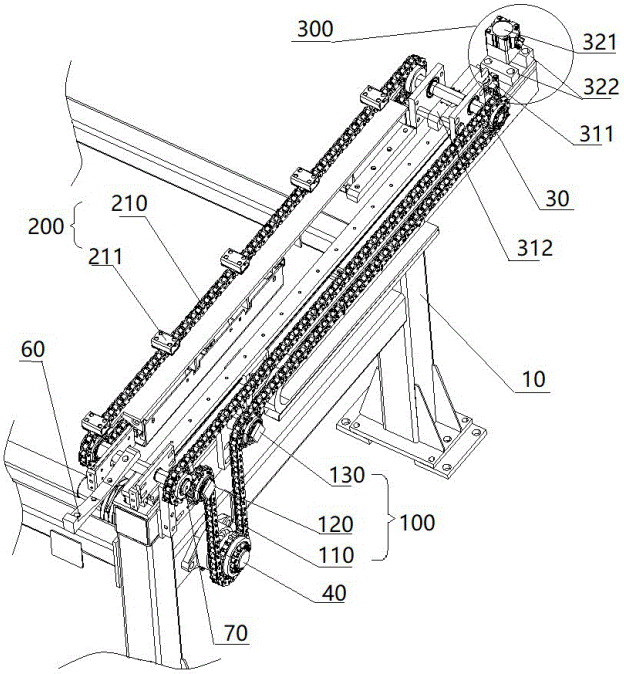

21: 2026/09809. 22: 2026/10/12. 43: 2026/10/27
51: H01B
71: Baoding Jingyang Lijin Cable Manufacturing Co., Ltd.
72: NIU, Yanhui, GAO, Rui
33: CN 31: 202511375282.8 32: 2025-09-25
54: HIGH-PERFORMANCE MULTIFUNCTIONAL CABLE AND PREPARATION METHOD THEREOF
00: -

The present application discloses a high-performance multifunctional cable and a preparation method thereof, and belongs to the technical field of cables. The preparation method includes the following steps: step 1: stretching a nickel-titanium wire to produce a strain, then coating an insulating layer on a surface of the nickel-titanium wire to obtain a shape memory alloy wire, and stretching taut and fixing the shape memory alloy wire in an inner cavity of a polytetrafluoroethylene mold; step 2: mixing a phenolic resin prepolymer solution containing thermochromic microcapsules, a MXene/ethanol dispersion and a silica sol to obtain a mixed sol, adjusting a pH value of the mixed sol, and stirred to obtain a multifunctional composite sol; step 3: injecting the multifunctional composite sol into the polytetrafluoroethylene mold in which the shape memory alloy wire has been fixed, and gelation and modification were performed to obtain a modified multifunctional composite gel; step 4: performing supercritical CO2 drying on the modified

multifunctional composite gel to obtain a multifunctional composite aerogel; and step 5: filling the multifunctional composite aerogel between a conductor having an insulating layer and a cable sheath.

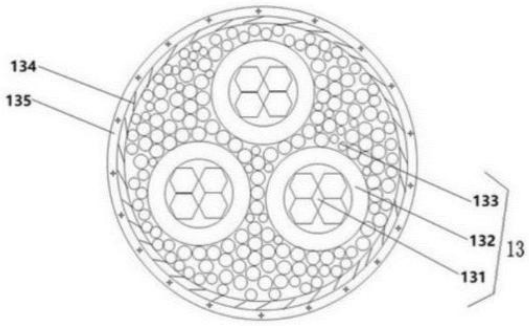

21: 2026/09810. 22: 2026/10/12. 43: 2026/10/27
51: G01P
71: TIANJIN RESEARCH INSTITUTE FOR WATER TRANSPORT ENGINEERING.M.O.T.
72: QI Chunfeng, FENG Xiaoxiang, WEI Dejian, ZHANG Mingjin, LV Biao, HAO Ling, LI Keguo, XING Yan
33: CN 31: 2025103091655 32: 2025-03-17

54: SEGMENTED VESSEL SPEED MEASUREMENT METHOD SUITABLE FOR ARC-SHAPED NAVIGATION TUNNEL

00: -

A segmented vessel speed measurement method suitable for an arc-shaped navigation tunnel. The method comprises the following steps: dividing an arc-shaped navigation section of a tunnel into several uniform measurement segments (a, b, c, d, e), and respectively erecting one laser rangefinder (5) at a front end of each of the measurement segments (a, b, c, d, e); presetting a collection sequence, and on the basis of the preset collection sequence, sequentially collecting distance data of a test vessel (11) during navigation which is measured by the laser rangefinders (5); on the basis of the distance data measured by the laser rangefinders (5), acquiring an arc length that the test vessel (11) has traveled by along a channel centerline (4) at a position point at any time; and on the basis of the ratio of the arc length to a navigation duration of the test vessel (11), obtaining a vessel speed. By means of segmented measurement, real-time data collection, and speed calculation based on an arc length, a vessel speed measurement method having strong adaptability, high accuracy and good real-time performance is provided for tests in arc-shaped navigation tunnels, thereby overcoming the shortcomings of the prior art in measurement in arc-shaped navigation channels. Also provided are a corresponding computing apparatus, a storage medium and a computer program product.

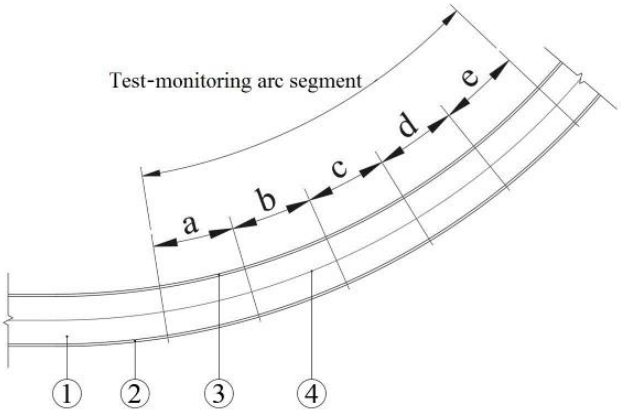

21: 2026/09901. 22: 2026/10/14. 43: 2026/10/27
51: H02J
71: Dunshi Magnetic Energy Technology Co., Ltd.
72: LI,Yuguang, HAO,Lijia, LIANG,Yanzhao
33: CN 31: 202511870531.0 32: 2025-12-12

54: FREQUENCY REGULATION SWITCHING METHOD, DEVICE, APPARATUS AND SYSTEM FOR HYBRID ENERGY STORAGE

00: -

The present invention provides a frequency regulation switching method, device, apparatus and system for hybrid energy storage, relating to the technical field of power grid frequency regulation. The method includes: during a process in which a flywheel energy storage device performs frequency regulation of a power grid, acquiring a real-time SOC value of the flywheel energy storage device; based on the real-time SOC value, determining a remaining available time of the flywheel energy storage device; when the remaining available time reaches a set time threshold, controlling a battery energy storage device to start participating in the frequency regulation; and based on a real-time battery frequency regulation power of the battery energy storage device, correspondingly reducing a real-time flywheel frequency regulation power of the flywheel energy storage device, until the real-time battery frequency regulation power reaches a frequency

regulation power currently required by the power grid.

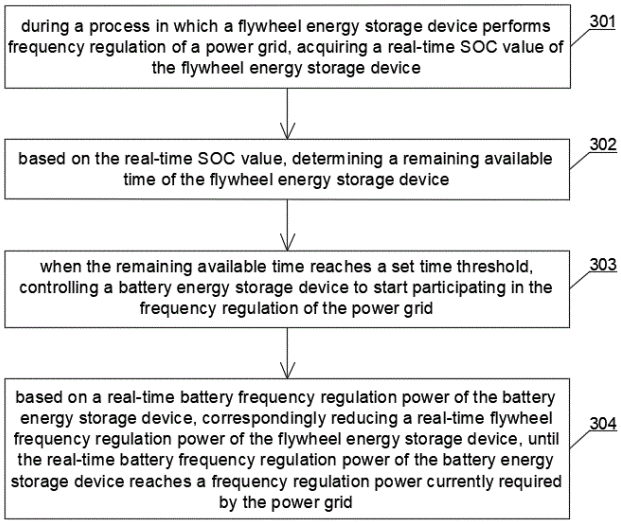

21: 2026/10163. 22: 2026/10/22. 43: 2026/10/27
51: B23P
71: Zhejiang Jinlong Electrical Machinery Stock Co., Ltd.
72: Linghui PAN, Mengkang ZOU, Weiwei YE
33: CN 31: CN202411535764.0 32: 2024-10-31
54: AUTOMATED ASSEMBLY PRODUCTION LINE FOR AN ELECTRIC MOTOR
00: -
An automated assembly production line for an electric motor comprises a conveying mechanism (1, 2) for conveying workpieces, a loading mechanism (3, 4), an unloading mechanism (5, 6), a bolt installation mechanism (7), a bolt supply mechanism (8), and a jacking mechanism (9). The bolt installation mechanism (7) comprises a frame (70), a head (71), and a cantilever arm (72) connecting the frame (70) to the head (71). The frame (70) carries a rotary assembly and a lifting assembly for rotating and raising or lowering the cantilever arm (72). The head (71) carries tightening assemblies (73) corresponding to bolt installation positions on a workpiece. The jacking mechanism (9) lifts the workpiece while the tightening assemblies (73) simultaneously install and tighten bolts supplied by the bolt supply mechanism (8), promoting uniform bolt loading and assembly quality with automated workpiece handling.

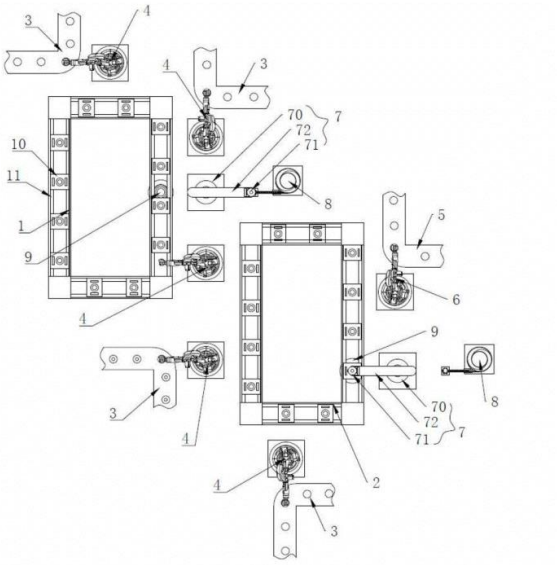

21: 2026/10830. 22: 2026/11/09. 43: 2026/11/13
51: G06F
71: MOTALA, Nazeefah
72: MOTALA, Nazeefah
33: ZA 31: 2026/06498 32: 2026-06-22
54: TRANSACTION FACILITATION SYSTEM AND METHOD
00: -
A transaction facilitation system which includes a central processor which is configured to store limited-disclosure data and sensitive data associated with all parties to a transaction; upon initiation of the transaction, maintain the transaction in a restricted disclosure state in which the limited-disclosure data is made available to at least one of the parties while the sensitive data is withheld from all parties; and transition the transaction from the restricted disclosure state to a disclosure state only after the identities of all parties to the transaction have been verified.

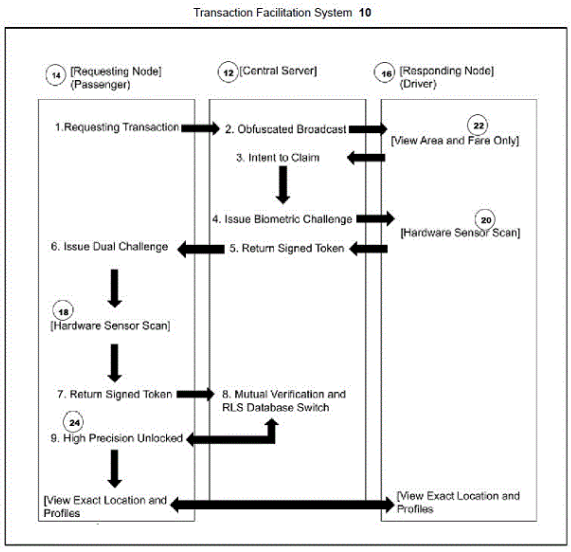
Transaction Facilitation System 10
14 [Requesting Node] (Passenger)
12 [Central Server]
16 [Responding Node] (Driver)
1.Requesting Transaction
2. Obfuscated Broadcast
22 [View Area and Fare Only]
3. Intent to Claim
4. Issue Biometric Challenge
20 [Hardware Sensor Scan]
6. Issue Dual Challenge
5. Return Signed Token
18 [Hardware Sensor Scan]
7. Return Signed Token
8. Mutual Verification and RLS Database Switch
24
9. High Precision Unlocked
[View Exact Location and Profiles
[View Exact Location and Profiles

HYPOTHECATIONS

No records available

JUDGMENTS

No records available

OFFICE PRACTICE NOTICES

No records available

3. DESIGNS

DESIGNS

APPLICATIONS FOR REGISTRATION OF DESIGNS IN TERMS OF ACT No. 195 OF 1993

The particulars appear in the following sequence: Copies of the application and representations cannot be supplied until application is registered and advertised. In all correspondence reference should be made to the number of the application. Application number, full name of applicant, class, articles to which design is to be applied and priority date (if any)

APPLICATION FOR THE RESTORATION OF A LAPSED DESIGN UNDER SECTION 23 OF THE ACT

No records available

VOLUNTARY SURRENDER OF A DESIGN IN TERMS OF SECTION 34 REGULATION 42(4) OF THE DESIGN ACT

No records available

APPLICATION TO CORRECT AND/OR AMEND DESIGNS APPLICATION OR REGISTRATION

No records available

NOTICE OF REGISTRATION OF DESIGNS

Notice of registration of the designs mentioned below has been issued by the Registrar of Designs in terms of the Designs Act, 1993 (Act No. 195 of 1993)

INSPECTION OF DESIGNS

A design application, may after a notice of registration has been published, be inspected during office hours at the Designs Office, Pretoria, at a charge of R3, 00

COPIES OF DOCUMENTS

The Designs Office, Private Bag X400, Pretoria, supplies photocopies of all design documents at R1, 00 per page.

The numerical references denote the following: **(21)** Number of application. **(22)** Date of lodgment. **(23)** release date (if applicable). **(43)** Date of registration. **(52)** Class. **(24)** Type of design. **(71)** Name(s) of applicant(s). **(33)** Country. **(31)** Number and. **(32)** Date of convention application. **(54)** Articles to which design is to be applied. **(57)** Brief statement of features.

N.B.: Date of registration **(43)** is either Date of lodgment **(22)** or Date of convention of application **(32)** whichever is the earlier.

. - APPLIED ON 2026/10/23 -

A2026/01233 - MOGA TECHNOLOGY CO., LTD. Class 15. ROBOTS

A2026/01230 - PROJECT 2026 (PTY) LTD Class 05. TEXTILE FABRICS

A2026/01231 - CHERY AUTOMOBILE CO., LTD. Class 12. AUTOMOBILES

A2026/01232 - CHERY COMMERCIAL VEHICLE (ANHUI) CO., LTD. Class 12. AUTOMOBILES

. - APPLIED ON 2026/10/26 -

A2026/01234 - KATE ROSANNE HORNE Class 07. THERMA-LOCK CUP

A2026/01235 - MOGA TECHNOLOGY CO., LTD. Class 15. ROBOTS

. - APPLIED ON 2026/10/27 -

A2026/01236 - NANDO'S BRAND CORPORATION (PTY) LTD Class 09. A CONDIMENT HOLDER CLOSURE

A2026/01238 - NANDO'S BRAND CORPORATION (PTY) LTD Class 09. A CONDIMENT HOLDER CLOSURE

A2026/01237 - AUTOMOBILI LAMBORGHINI S.P.A. Class 21. MODEL VEHICLES

. - APPLIED ON 2026/10/28 -

F2026/01246 - Hamer Offroad Pty Ltd Class 12. VEHICLE BULL BAR

A2026/01239 - SAILUN GROUP CO., LTD. Class 12. TIRE

A2026/01243 - AURUM ART (PTY) LTD Class 11. JEWELLERY SETTING

A2026/01244 - AURUM ART (PTY) LTD Class 11. JEWELLERY SETTING

A2026/01241 - AURUM ART (PTY) LTD Class 11. JEWELLERY SETTING

A2026/01245 - AURUM ART (PTY) LTD Class 11. JEWELLERY BAIL

A2026/01240 - AURUM ART (PTY) LTD Class 11. JEWELLERY SETTING

A2026/01242 - Hamer Offroad Pty Ltd Class 12. VEHICLE BULL BAR

. - APPLIED ON 2026/10/29 -

F2026/01253 - Scalfani Offroad Tech (Pty) Ltd Class 12. A CATTLE RAIL ASSEMBLY FOR A VEHICLE LOAD BIN

F2026/01251 - Scalfani Offroad Tech (Pty) Ltd Class 12. A CANOPY FOR A VEHICLE LOAD BIN

A2026/01248 - Scalfani Offroad Tech (Pty) Ltd Class 12. AN ACCESSORY FRAME FOR A VEHICLE LOAD BIN

A2026/01247 - MC Dourie Class 32. VANTA BLUE

A2026/01252 - Scalfani Offroad Tech (Pty) Ltd Class 12. A CATTLE RAIL ASSEMBLY FOR A VEHICLE LOAD BIN

F2026/01249 - Scalfani Offroad Tech (Pty) Ltd Class 12. AN ACCESSORY FRAME FOR A VEHICLE LOAD BIN

A2026/01250 - Scalfani Offroad Tech (Pty) Ltd Class 12. A CANOPY FOR A VEHICLE LOAD BIN

. - APPLIED ON 2026/10/30 -

A2026/01257 - Dalian Keenwise Industrial Technology Co., Ltd. Class 15. MEDICAL STEAM TRAP

A2026/01254 - THE BEST TRUST Class 23. AGRIFIX SPLIT PIPE REPAIR COUPLING

A2026/01256 - WOMBAT TIMBERS PTY LTD. Class 8. SCREWS

A2026/01258 - Duram (Pty) Limited Class 20. SWATCH

A2026/01259 - Duram (Pty) Limited Class 32. SWATCH

A2026/01255 - BAHAW, Ratankumar Mohon Class 8. CURTAIN ROD HOLDERS

. - APPLIED ON 2026/11/03 -

A2026/01260 - Dowse Limited Class 28. AIR FRESHENER

. - APPLIED ON 2026/11/05 -

A2026/01262 - ALSA OPERATIONS PTY LTD Class 2502. CONCRETE FRAME STRUCTURE

F2026/01261 - VUSANI Class 32. KING VUSANI ABATHEMBU APPRECIATION

. - APPLIED ON 2026/11/06 -

A2026/01264 - ESSITY HYGIENE AND HEALTH AKTIEBOLAG Class 23. DISPENSERS

A2026/01268 - ESSITY HYGIENE AND HEALTH AKTIEBOLAG Class 23. DISPENSERS

F2026/01263 - GEFFEN, Charles Brent Class 28. TONGUE CLEANER

A2026/01266 - ESSITY HYGIENE AND HEALTH AKTIEBOLAG Class 23. DISPENSERS

A2026/01265 - ESSITY HYGIENE AND HEALTH AKTIEBOLAG Class 23. DISPENSERS

A2026/01267 - ESSITY HYGIENE AND HEALTH AKTIEBOLAG Class 23. DISPENSERS

. - APPLIED ON 2026/11/09 -

A2026/01269 - Grit Empire (Pty) Ltd Class 27. A VAPE APPARATUS

A2026/01271 - Grit Empire (Pty) Ltd Class 27. A VAPE APPARATUS

A2026/01272 - YETI COOLERS, LLC Class 9. CONTAINER

A2026/01270 - Grit Empire (Pty) Ltd Class 27. A VAPE APPARATUS

A2026/01273 - YETI COOLERS, LLC Class 9. SPIGOT

. - APPLIED ON 2026/11/10 -

A2026/01277 - COMPAGNIE GENERALE DES ETABLISSEMENTS MICHELIN Class 12. TYRE TREAD

F2026/01280 - Hamer Offroad Pty Ltd Class 12. VEHICLE BULL BAR

A2026/01274 - INTERNATIONAL COMMITTEE OF THE RED CROSS, UNIVERSITY OF JOHANNESBURG Class 21. A GAMEBOARD

A2026/01279 - Hamer Offroad Pty Ltd Class 12. VEHICLE BULL BAR

A2026/01278 - GREAT WALL MOTOR COMPANY LIMITED Class 12. AUTOMOBILES

A2026/01276 - COMPAGNIE GENERALE DES ETABLISSEMENTS MICHELIN Class 12. TYRE SIDEWALL

A2026/01275 - INTERNATIONAL COMMITTEE OF THE RED CROSS, UNIVERSITY OF JOHANNESBURG Class 21. A GAMEBOARD

. - APPLIED ON 2026/11/11 -

F2026/01283 - CHUSILP GROUP TRADING CO., LTD. Class 12. VEHICLE BULL BAR

A2026/01281 - ARJO IP HOLDING AB Class 06. SHOWER CHAIR

A2026/01282 - CHUSILP GROUP TRADING CO., LTD. Class 12. VEHICLE BULL BAR

. - APPLIED ON 2026/11/12 -

A2026/01293 - KETO-CHECK INC. Class 10. BREATH ANALYZING DEVICE

A2026/01287 - TCC 4X4 MATS (PTY) LTD. Class 6. MATS FOR VEHICLES

A2026/01294 - FERRARI S.P.A. Class 12. CAR

A2026/01295 - FERRARI S.P.A. Class 21. TOY CAR

F2026/01284 - WIRE VENTURES CC Class 25. FENCE POSTS

A2026/01288 - MARCOPOLO S.A. Class 6. VEHICLE SEAT SIDE

F2026/01296 - ARCWING (PROPRIETARY) LIMITED Class 12. CANOPY

A2026/01290 - MARCOPOLO S.A. Class 6. VEHICLE SEAT

A2026/01286 - TCC 4X4 MATS (PTY) LTD. Class 6. MATS FOR VEHICLES

A2026/01285 - Jan Wiese Class 12. OVAL CLUSTER

A2026/01292 - KETO-CHECK INC. Class 10. BREATH ANALYZING DEVICE

A2026/01289 - MARCOPOLO S.A. Class 6. VEHICLE SEAT

A2026/01291 - MARCOPOLO S.A. Class 6. VEHICLE SEAT

. - APPLIED ON 2026/11/13 -

A2026/01301 - CHERY AUTOMOBILE CO., LTD. Class 12. AUTOMOBILES

A2026/01300 - CHERY AUTOMOBILE CO., LTD. Class 12. AUTOMOBILES

A2026/01302 - ASSA ABLOY AB Class 14. ACCESS CONTROL SYSTEM READERS

F2026/01298 - WAVE PAPER (PTY) LTD Class 9. BLANKS FOR FORMING A CONTAINER

A2026/01303 - ASSA ABLOY AB Class 14. ACCESS CONTROL SYSTEM READERS

A2026/01299 - CHERY AUTOMOBILE CO., LTD. Class 12. AUTOMOBILES

A2026/01304 - ASSA ABLOY AB Class 14. ACCESS CONTROL SYSTEM READERS

F2026/01297 - WAVE PAPER (PTY) LTD Class 9. BLANKS FOR FORMING A CONTAINER

. - APPLIED ON 2026/11/16 -

A2026/01305 - CHUSILP GROUP TRADING CO., LTD. Class 12. VEHICLE BULL BAR

F2026/01313 - INSITU HOLDINGS (PTY) LTD Class 25. FORMWORK PANELS

F2026/01308 - CHUSILP GROUP TRADING CO., LTD. Class 12. VEHICLE BULL BAR

F2026/01312 - UNIVERSITY OF JOHANNESBURG Class 8. CONTAINER OPENERS

F2026/01306 - CHUSILP GROUP TRADING CO., LTD. Class 12. VEHICLE BULL BAR

A2026/01310 - UNIVERSITY OF JOHANNESBURG Class 8. CONTAINER OPENERS

A2026/01309 - UNIVERSITY OF JOHANNESBURG Class 7. CONTAINER OPENERS

F2026/01311 - UNIVERSITY OF JOHANNESBURG Class 7. CONTAINER OPENERS

A2026/01307 - CHUSILP GROUP TRADING CO., LTD. Class 12. VEHICLE BULL BAR

. - APPLIED ON 2026/11/17 -

A2026/01315 - SODASTREAM INDUSTRIES LTD. Class 9. BOTTLE

A2026/01314 - SODASTREAM INDUSTRIES LTD. Class 9. BOTTLE

. - APPLIED ON 2026/11/18 -

F2026/01316 - HUTCHESON, Brent Class 19. PERFORATED CONSTRUCTION BOARD

F2026/01317 - HUTCHESON, Brent Class 21. PERFORATED CONSTRUCTION BOARD

. - APPLIED ON 2026/11/19 -

F2026/01318 - WAVE PAPER (PTY) LTD Class 9. BLANKS FOR FORMING A PALLET

F2026/01320 - SUMMIT LADDERS (PTY) LTD Class 25. LADDER CAP

A2026/01324 - LG ELECTRONICS INC. Class 23. OUTDOOR UNIT FOR AN AIR CONDITIONER

A2026/01319 - ZEN MEDICAL (PTY) LTD Class 24. SURGICAL DRAPES

A2026/01322 - HUAWEI TECHNOLOGIES CO., LTD. Class 14. ROUTER

F2026/01321 - ZEN MEDICAL (PTY) LTD Class 24. SURGICAL DRAPES

F2026/01323 - MORRIS, MICHAEL PATERSON Class 20. STAND

APPLICATION FOR THE RESTORATION OF A LAPSED DESIGN UNDER SECTION 23 OF THE ACT

No records available

VOLUNTARY SURRENDER OF A DESIGN IN TERMS OF SECTION 34 REGULATION 42(4) OF THE DESIGN ACT

No records available

APPLICATION TO CORRECT AND/OR AMEND DESIGNS APPLICATION OR REGISTRATION

No records available

NOTICE OF REGISTRATION OF DESIGNS

Notice of registration of the designs mentioned below has been issued by the Registrar of Designs in terms of the Designs Act, 1993 (Act No. 195 of 1993)

INSPECTION OF DESIGNS

A design application, may after a notice of registration has been published, be inspected during office hours at the Designs Office, Pretoria, at a charge of R3, 00

COPIES OF DOCUMENTS

The Designs Office, Private Bag X400, Pretoria, supplies photocopies of all design documents at R1, 00 per page.

The numerical references denote the following: **(21)** Number of application. **(22)** Date of lodgment. **(23)** release date (if applicable). **(43)** Date of registration. **(52)** Class. **(24)** Type of design. **(71)** Name(s) of applicant(s). **(33)** Country. **(31)** Number and. **(32)** Date of convention application. **(54)** Articles to which design is to be applied. **(57)** Brief statement of features.

N.B.: Date of registration **(43)** is either Date of lodgment **(22)** or Date of convention of application **(32)** whichever is the earlier.

Registrar of Designs

21: A2019/00811 22: 2019-06-12 23:
43: 2018-12-13
52: Class 4 24: Part A
71: Colgate-Palmolive Company
33: US 31: 29/673,234 32: 2018-12-13
54: ORAL CARE IMPLEMENTS

57: The design relates to an oral care implement in the form of a toothbrush having an elongate handle, an elongate neck connected to the handle and an oval head projecting from the neck. The handle has a rounded free end portion. A connection line extends peripherally between the free end portion

and a remainder of the handle and forms a steep arch on opposing sides of the handle. The handle has a plurality of longitudinally spaced bulges on an outer surface thereof defining finger grip formations. The handle curves rearwardly at a top end thereof where it merges continuously with the neck. A connection line extends peripherally between the neck and the handle. Tufts of bristles extend from the head. An oval grip formation comprising a plurality of nodules is provided on a front and rear of the handle.

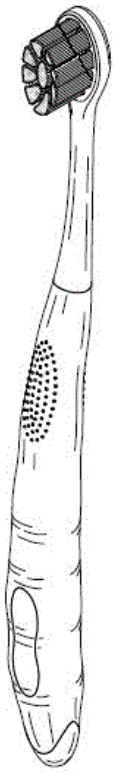

Figure 1

Three-dimensional view

21: A2019/00855 22: 2019-06-20 23:
43: 2018-12-21
52: Class 9 24: Part A
71: Colgate-Palmolive Company
33: US 31: 29/674,457 32: 2018-12-21
54: CONTAINERS
57: The design is for a container comprising a base portion, a mid-region and a top portion. Front and rear major faces of a body are connected by convexly curved sides such that the body has a generally elliptical transverse cross-section throughout its length. Two parallel grooves extend peripherally around the base portion which tapers inwardly above the grooves to merge continuously with the mid-region. A central area of a top surface of the top portion is indented to define two oppositely located shoulders. An annulus protrudes between the shoulders to define an inlet. A groove extends peripherally around the top portion which tapers inwardly beneath the groove to merge continuously with the mid-region. Front and rear faces of the mid-region are provided with two spaced longitudinally extending grooves. Four spaced transversely extending grooves are provided therebetween. Four curved grooves are provided at a bottom of the front and rear faces.

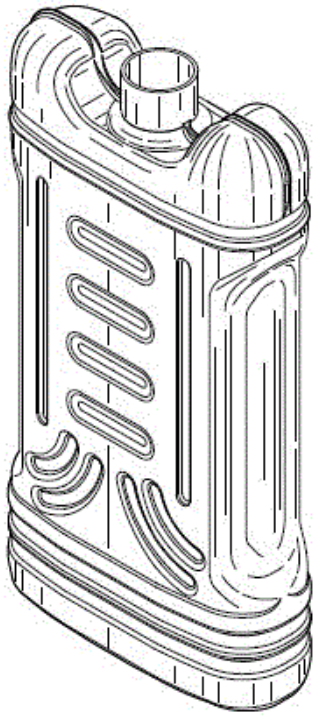

Figure 1

Three-dimensional view

21: A2020/00187 22: 2020-02-13 23:
43: 2019-08-14
52: Class 23 24: Part A
71: Turret IP Pty Ltd
33: AU 31: 201914575 32: 2019-08-14
54: LIQUID INTAKES
57: The design is for a liquid intake for use with a pumping apparatus. The liquid intake comprises a generally saucer-shaped body having a convexly curved upper cover, a peripherally extending side wall and a lower base. The upper cover includes a centrally positioned circular formation within a second larger circular formation, and a series of D-

shaped sections that are spaced equidistantly about a circumference.

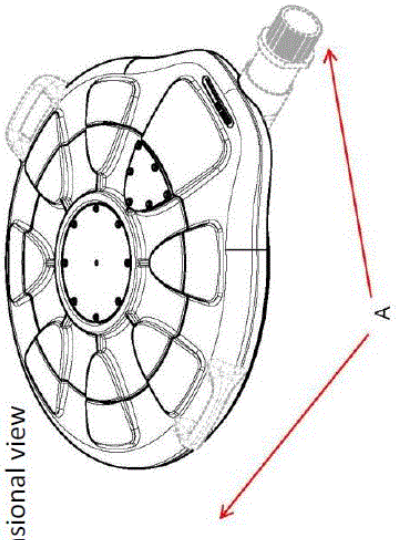

Figure 2

Three-dimensional view

21: A2020/00194 22: 2020-02-14 23:
43: 2019-08-16
52: Class 4 24: Part A
71: Colgate-Palmolive Company
33: US 31: 29/702,082 32: 2019-08-16
54: ORAL CARE IMPLEMENTS
57: The design is for an oral care implement in the form of a toothbrush. The toothbrush comprises an elongate handle with a rounded base, a mid-section with a gentle concavity, and an elongate neck. The toothbrush has an oval head projecting upwardly from the neck. In side view, a front surface of the mid-section has a gentle undulation. A front surface of the handle includes a marking of bamboo-like branches and leaves. A front of the head includes an arrangement of bristles.



Figure 1

Three-dimensional view

21: A2020/00274 22: 2020-02-28 23:
43: 2019-10-03
52: Class 15 24: Part A
71: Watson-Marlow Limited
33: EM(GB) 31: 006977617-0001 32: 2019-10-03
54: PUMPS
57: The design is for a pump and more particularly a pump head and comprises a body having a polyhedron like covering which is generally octagonal in shape when viewed from a front thereof., A through passage extends through the body and opens out of opposed sides of the covering. A central ridge is provided in the passage and divides the passage into two transversely spaced apart channels. Inner side walls of the channels formed by the ridge are concave. A base of each channel is inclined upwardly inwardly from each end thereof.

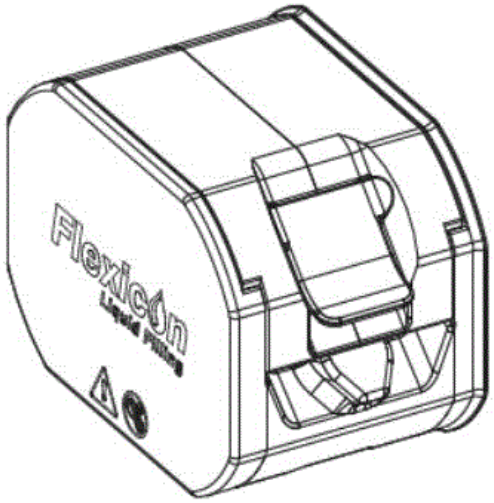

Figure 1

Three-dimensional view

21: A2020/00397 22: 2020-03-23 23:
43: 2019-10-03
52: Class 24 24: Part A
71: Watson-Marlow Limited
33: EM(GB) 31: 006977617-0001 32: 2019-10-03
54: PUMPS
57: The design is for a pump and more particularly a pump head and comprises a body having a polyhedron like covering which is generally octagonal in shape when viewed from a front thereof., A through passage extends through the body and opens out of opposed sides of the covering. A central ridge is provided in the passage and divides the passage into two transversely spaced apart channels. Inner side walls of the channels formed by the ridge are concave. A base of each channel is inclined upwardly inwardly from each end thereof.

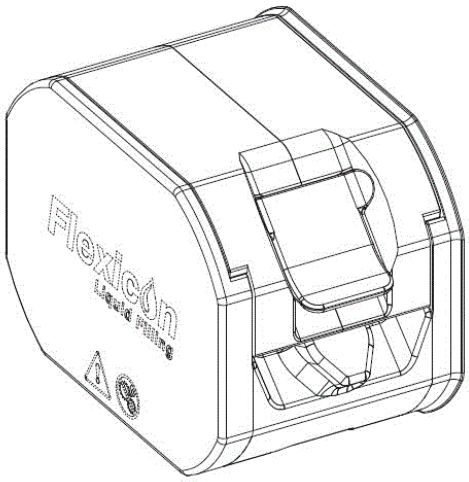

Figure 1

Three-dimensional view

21: A2024/01393 22: 2024-12-23 23:
43: 2024-06-24
52: Class 14 24: Part A
71: Sky CP Limited
33: GB 31: 6373798 32: 2024-06-24
54: TELEVISIONS
57: The design is for a television. The television comprises a body having a general rectangular shape, the body including a rectangular flat screen that is nested in a rectangular front frame and a rear cover. The front frame comprises thin upper and side bezels with a thicker lower bezel. The rear cover comprises a major rear panel arranged in the form of a grid-like pattern, that is flanked by a pair of opposite rearwardly extending side walls and an upper wall extending between bevelled upper ends of the side walls.

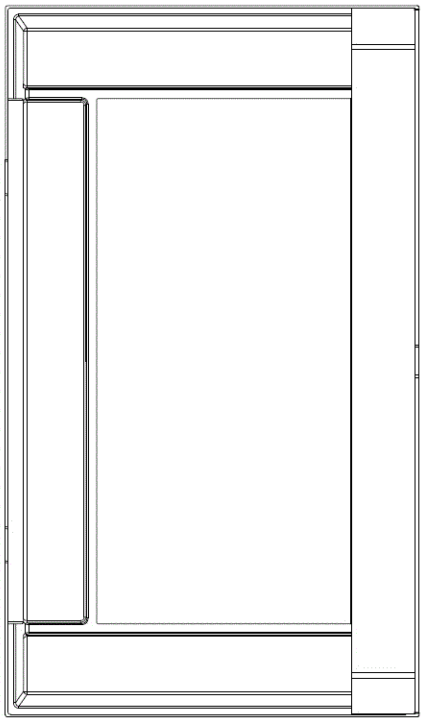

Single figure
Rear view

21: A2025/00566 22: 2025-05-20 23:
43: 2024-11-25
52: Class 9 24: Part A
71: Eli Lilly and Company
33: US 31: 29/974,777 32: 2024-11-25
54: BOXES
57: The design is for a box. The box has an elongate cuboidal body with front and rear faces, two side faces, and top and bottom faces. The front and rear faces are slightly wider than the side faces. The front face comprises a block about one third from a top with a pointed left end. A left side face comprises a block at a bottom with an off-centred pointed top end.

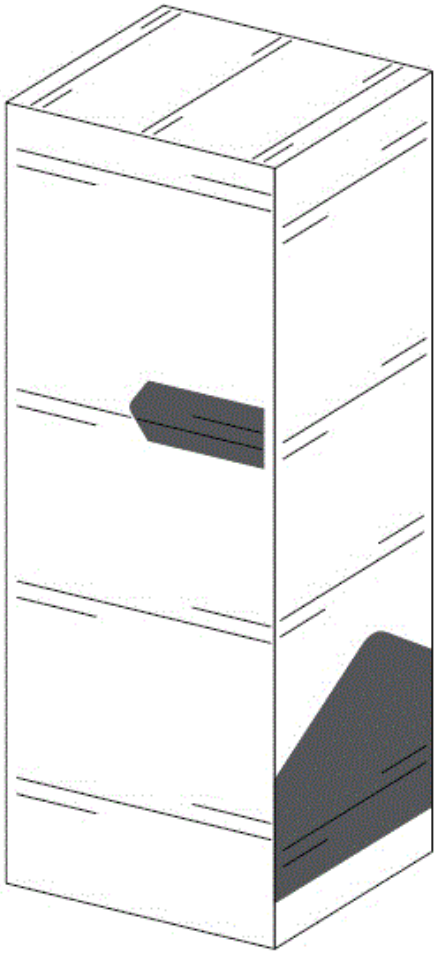

Figure 1
Three-dimensional view

21: A2025/00916 22: 2025-08-04 23:
43: 2026-10-22
52: Class 02 24: Part A
71: TS GALAXY FOOTBALL CLUB (PTY)LTD
54: A GARMENT
57: The features of the design for which protection is claimed reside in the shape, pattern and/or ornamentation of a garment as shown in the accompanying representations.

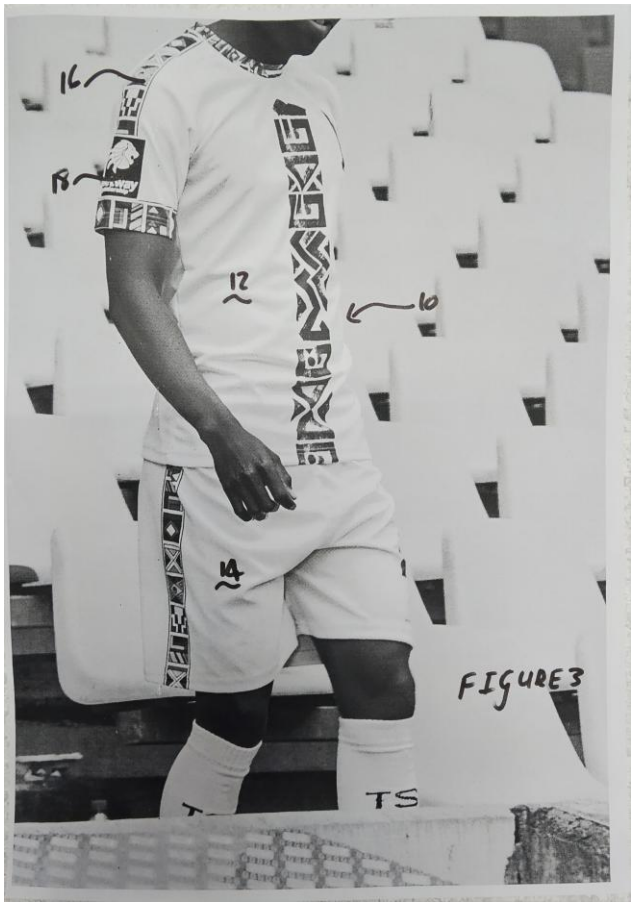

21: A2025/01039 22: 2025-08-25 23:
43: 2025-02-26
52: Class 14 24: Part A
71: Huawei Technologies Co., Ltd.
33: CN 31: 202530085172.2 32: 2025-02-26

54: DISPLAY SCREENS OR PORTIONS THEREOF WITH GRAPHICAL USER INTERFACES

57: The design is for a display screen with a user interface (UI). The UI features various demarcated zones. In a top half of the screen, rectangular upright zones are provided: there are top left and top right zones, and there is a third zone mostly off-screen on a right of the top right zone. Beneath the top zones is a large square zone with rounded top corners having an elongate horizontal button with rounded ends at a bottom thereof.

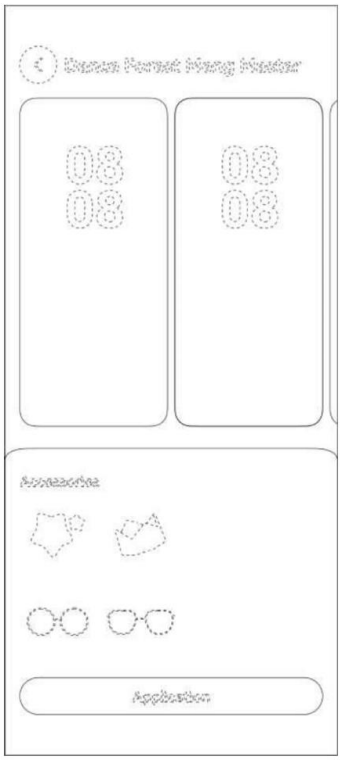

Single Figure
Face-on view

21: A2025/01125 22: 2025-09-10 23:
43: 2026-09-16
52: Class 03 24: Part A
71: Mark Michael Cain

54: HANDHELD-DRILL HOLSTER

57: The design relates to a holster for handheld drills. The design incorporates an open structural arrangement which allows ventilation and prevents undue heat retention. The holster provides user protection from exposed drill bits while maintaining versatility for both left- and right-handed users without loss of function. The design further permits the addition of accessories without encumbering the user. The holster employs a unique ergonomic entry-and-twist motion which secures the drill safely while allowing ease of access. Upper and lower support portions prevent tilting or accidental slippage of the drill from the housing. The overall configuration allows ergonomic fitting of the holster to a toolbelt for secure, convenient carriage.

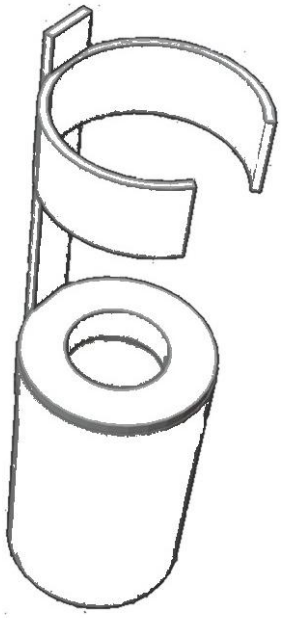

21: A2025/01184 22: 2025-10-01 23:
43: 2026-10-20
52: Class 12 24: Part A
71: GREAT WALL MOTOR COMPANY LIMITED
33: CN 31: 2025301745097 32: 2025-04-03
33: CN 31: 2025304602451 32: 2025-08-05
54: AUTOMOBILES
57: The features of the design for which protection is claimed include the pattern and/or shape and/or configuration and/or ornamentation of an Automobile, substantially as shown in the representations.



Perspective view 1.

21: A2025/01227 22: 2025-10-17 23:
43: 2026-10-20
52: Class 12 24: Part A
71: GREAT WALL MOTOR COMPANY LIMITED
33: CN 31: 2025302113785 32: 2025-04-18
54: AUTOMOBILES
57: The features of the design for which protection is claimed include the pattern and/or shape and/or configuration and/or ornamentation of an Automobile, substantially as shown in the representations.



Perspective view 1.

21: A2025/01228 22: 2025-10-17 23:
43: 2026-10-20
52: Class 12 24: Part A
71: GREAT WALL MOTOR COMPANY LIMITED
33: CN 31: 2025302113785 32: 2025-04-18
54: AUTOMOBILES
57: The features of the design for which protection is claimed include the pattern and/or shape and/or configuration and/or ornamentation of an Automobile, substantially as shown in the representations.



Perspective view 1.

21: A2025/01229 22: 2025-10-17 23:
43: 2026-10-20
52: Class 12 24: Part A
71: GREAT WALL MOTOR COMPANY LIMITED
33: CN 31: 2025302113785 32: 2025-04-18
54: AUTOMOBILES
57: The features of the design for which protection is claimed include the pattern and/or shape and/or

configuration and/or ornamentation of an Automobile, substantially as shown in the representations.



Perspective view 1.

21: A2025/01495 22: 2025-12-09 23:
43: 2026-10-06
52: Class 28 24: Part A
71: PARFUMS CHRISTIAN DIOR
33: EU 31: 015106468-0001 32: 2025-06-11
54: DEVICE FOR APPLYING COSMETICS
57: The design is applied to a device for applying cosmetics. The features of the design for which protection is claimed are those of the shape and/or configuration and/or pattern and/or ornamentation of the device for applying cosmetics.

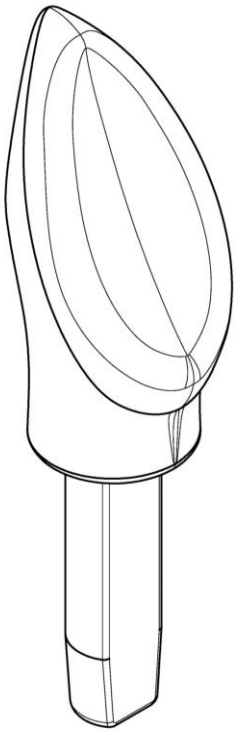

21: A2026/00050 22: 2026-01-21 23:
43: 2026-09-04
52: Class 06 24: Part A
71: New-Tec Integration (Xiamen) Co., Ltd.
33: CN 31: 202530428348.X 32: 2025-07-22
54: SPRING MATTRESS
57: The design is applied to a spring mattress. The features of the design for which protection is claimed are those of the pattern and/or shape and/or configuration and/or ornamentation of a spring mattress, substantially as illustrated in the accompanying representations.

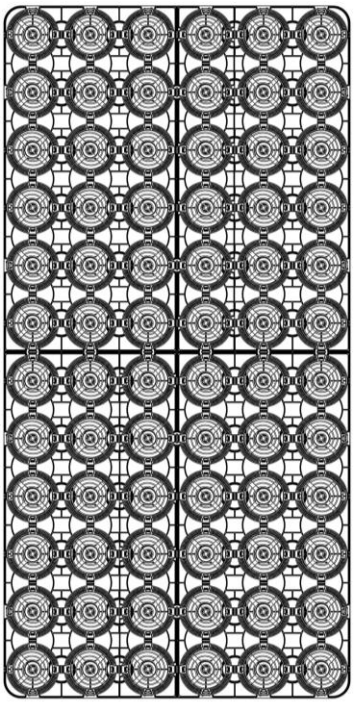

21: A2026/00090 22: 2026-02-02 23:
43: 2026-09-07
52: Class 10. 24: Part A
71: MONTRES TUDOR SA
33: CH 31: 2025-00362 32: 2025-08-15
54: Watch Dial
57: The design relates to a watch dial. The features of the design are those of shape and/or configuration and/or pattern and/or ornamentation.



FRONT VIEW

21: A2026/00091 22: 2026-02-03 23:
43: 2026-09-04
52: Class 16 24: Part A
71: OWLET BABY CARE, INC.
33: US 31: 30/016,502 32: 2025-08-04
54: VIDEO CAMERAS
57: The features of the design for which protection is claimed include the pattern and/or shape and/or configuration and/or ornamentation of a Video Camera, substantially as shown in the representations, the features shown in broken lines are for illustrative purposes only and are disclaimed.

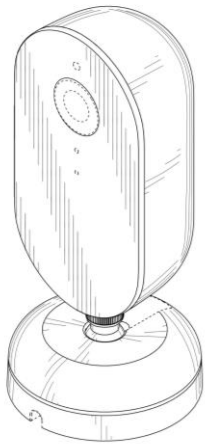

A perspective view of a VIDEO CAMERA.

21: A2026/00092 22: 2026-02-03 23:
43: 2026-09-04
52: Class 16 24: Part A
71: OWLET BABY CARE, INC.
33: US 31: 30/016,502 32: 2025-08-04
54: VIDEO CAMERAS
57: The features of the design for which protection is claimed include the pattern and/or shape and/or configuration and/or ornamentation of a Video Camera, substantially as shown in the representations, the features shown in broken lines are for illustrative purposes only and are disclaimed.

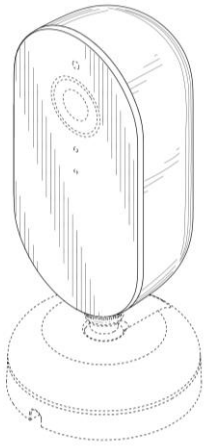

A perspective view of a VIDEO CAMERA.

21: A2026/00093 22: 2026-02-03 23:
43: 2026-09-04
52: Class 16 24: Part A
71: OWLET BABY CARE, INC.
33: US 31: 30/016,502 32: 2025-08-04
54: VIDEO CAMERAS
57: The features of the design for which protection is claimed include the pattern and/or shape and/or configuration and/or ornamentation of a Video Camera, substantially as shown in the representations, the features shown in broken lines are for illustrative purposes only and are disclaimed.

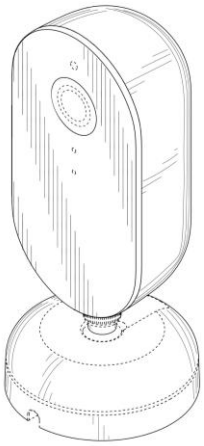

A perspective view of a VIDEO CAMERA.

21: A2026/00094 22: 2026-02-03 23:
43: 2026-09-04
52: Class 16 24: Part A
71: OWLET BABY CARE, INC.
33: US 31: 30/016,502 32: 2025-08-04
54: VIDEO CAMERAS
57: The features of the design for which protection is claimed include the pattern and/or shape and/or configuration and/or ornamentation of a Video Camera, substantially as shown in the representations, the features shown in broken lines are for illustrative purposes only and are disclaimed.

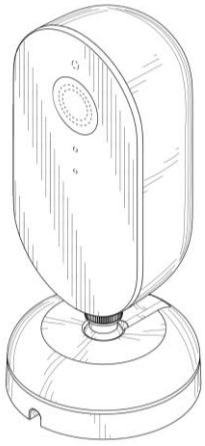

A perspective view of a VIDEO CAMERA.

21: A2026/00095 22: 2026-02-03 23:
43: 2026-02-03
52: Class 9 24: Part A
71: Stratovest 117 Proprietary Limited
54: Beverage Dispensers
57: The design is applied to a bag-in-box type beverage dispenser as shown in the accompanying drawings. The beverage dispenser has a cylindrical outer container in which a flexible bag containing a beverage, is received. A cooling agent such as a bag containing ice may be located on the bag containing the beverage. The outer container has an aperture near a lower end thereof, through which a dispensing tap of the bag extends. The beverage dispenser further includes a collar having two arm formations which extend partially around a lower side wall of the outer container and a raised convexly curved central support formation for supporting the tap, the central support formation having a central slot which is open at the bottom and curved at the top, which engages a flange formation from which the tap extends.

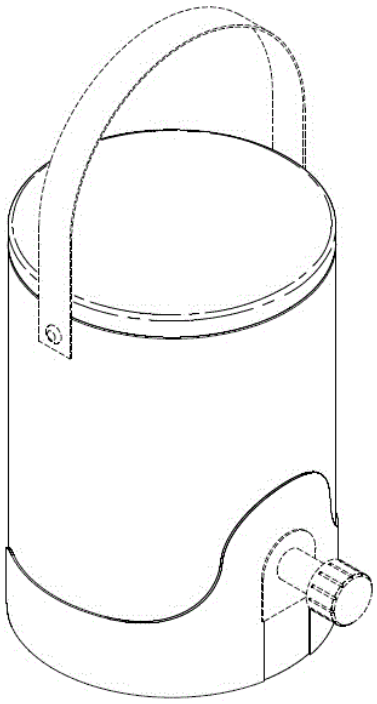

Three-dimensional view

21: A2026/00107 22: 2026-02-06 23:
43: 2026-09-07
52: Class 9. 24: Part A
71: BELVAC PRODUCTION MACHINERY, INC.
33: US 31: 30/017,064 32: 2025-08-07
54: Container for a Beverage or the Like
57: The design relates to a container for a beverage or the like. The features of the design are those of shape and/or configuration and/or pattern and/or ornamentation.



TOP PERSPECTIVE VIEW

21: A2026/00108 22: 2026-02-06 23:
43: 2026-09-07
52: Class 9. 24: Part A
71: BELVAC PRODUCTION MACHINERY, INC.
33: US 31: 30/017,073 32: 2025-08-07
54: Container for a Beverage or the Like
57: The design relates to a container for a beverage or the like. The features of the design are those of shape and/or configuration and/or pattern and/or ornamentation.



TOP PERSPECTIVE VIEW

21: A2026/00109 22: 2026-02-06 23:
43: 2026-09-07
52: Class 9. 24: Part A
71: BELVAC PRODUCTION MACHINERY, INC.
33: US 31: 30/017,068 32: 2025-08-07
54: Container for a Beverage or the Like
57: The design relates to a container for a beverage or the like. The features of the design are those of shape and/or configuration and/or pattern and/or ornamentation.



TOP PERSPECTIVE VIEW

21: A2026/00111 22: 2026-02-09 23:
43: 2026-09-07
52: Class 10. 24: Part A
71: IDEMIA PUBLIC SECURITY FRANCE
33: IB 31: 171319 32: 2025-11-25
54: Biometric Console
57: The design relates to a biometric console. The features of the design are those of shape and/or configuration and/or ornamentation.



PERSPECTIVE VIEW

21: A2026/00112 22: 2026-02-09 23:
43: 2026-09-07
52: Class 10. 24: Part A
71: IDEMIA PUBLIC SECURITY FRANCE
33: IB 31: 171319 32: 2025-11-25
54: Biometric Console
57: The design relates to a biometric console. The features of the design are those of shape and/or configuration and/or ornamentation.



PERSPECTIVE VIEW

21: A2026/00113 22: 2026-02-09 23:
43: 2025-08-07
52: Class 6 24: Part A
71: Madad Pty Ltd
33: AU 31: 202516102 32: 2025-08-07
54: MATTRESSES AND MATTRESS SUPPORTS
57: The design is for a mattress and mattress support comprising an elongate, cuboidal body formed from individual elongate, cuboidal segments arranged side by side. Each segment has opposing front and rear faces, opposing side faces, and opposing top and bottom faces. The side faces include furrows spaced equidistantly along their length. Each segment further includes two symmetrical clusters of three apertures, comprising two outer apertures and a central aperture, extending therethrough. The outer apertures have rounded outer profiles and pointed inner profiles, while the central aperture has a hexagonal profile.

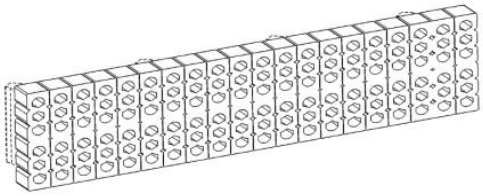

Figure 5
First three-dimensional view

21: A2026/00124 22: 2026-02-11 23:
43: 2026-09-04
52: Class 03 24: Part A
71: GERT-JOHAN COETZEE (PTY) LTD
54: HANDBAG
57: The features of the design for which protection is claimed are those of the shape and/or configuration and/or ornamentation and/or pattern of a handbag, substantially as shown in the accompanying representations.



Figure 1 – top perspective view

21: A2026/00125 22: 2026-02-11 23:
43: 2026-09-04
52: Class 03 24: Part A
71: GERT-JOHAN COETZEE (PTY) LTD
54: CLASP
57: The features of the design for which protection is claimed are those of the shape and/or configuration and/or ornamentation and/or pattern of a clasp, substantially as shown in the accompanying representations and irrespective of the features shown in broken lines.

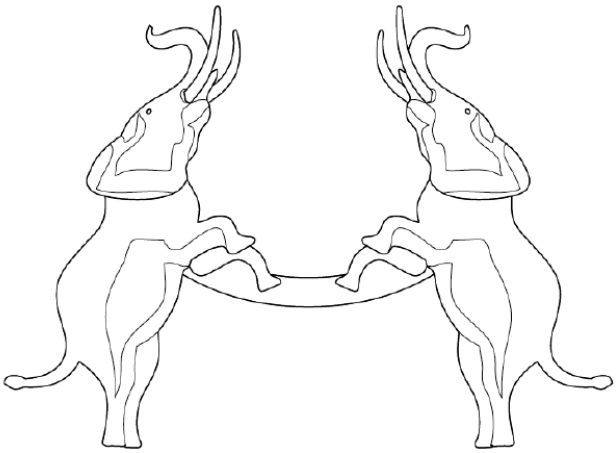

Figure 1 – front view

21: A2026/00129 22: 2026-02-12 23:
43: 2026-09-04
52: Class 21 24: Part A
71: GAVRIC, Slobodan
54: FISHING TOOL
57: The design relates to a fishing tool. The features of the design are those of shape and/or configuration. Protection is not claimed for the fishing tool accessories shown in Figures 7 to 10.

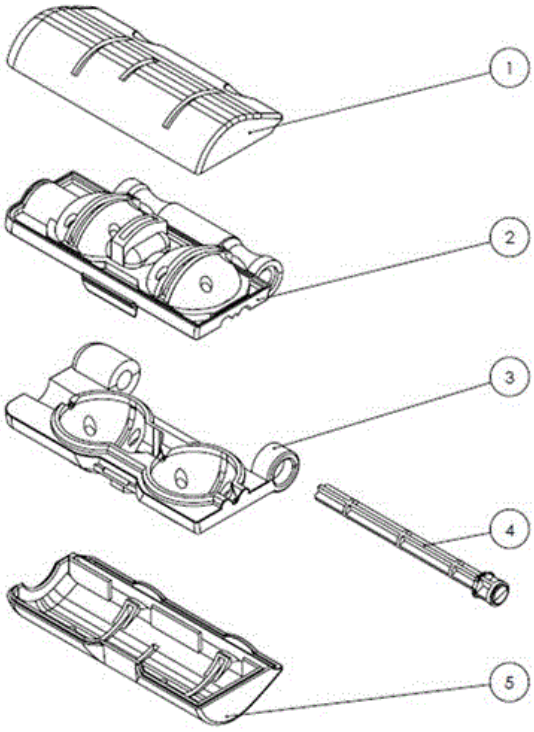

21: A2026/00133 22: 2026-02-12 23:
43: 2026-09-07
52: Class 13. 24: Part A
71: LG ELECTRONICS INC.
33: KR 31: 30-2025-0042004 32: 2025-10-17
54: Fastening Holder for Cables
57: The design relates to a fastening holder for cables. The features of the design are those of shape and/or configuration and/or pattern and/or ornamentation.

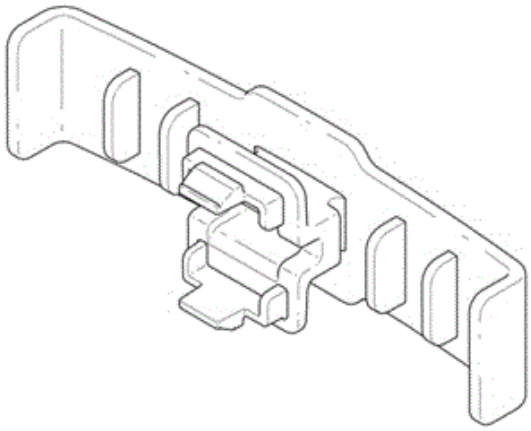

FRONT PERSPECTIVE VIEW

21: A2026/00157 22: 2026-02-18 23:
43: 2026-02-18
52: Class 25 24: Part A
71: PRINSLOO, Wessel Frans, TOPFLOOR CONCRETE PROPRIETARY LIMITED
54: Construction members
57: The design relates to a construction member substantially as shown in the accompanying representations. The construction member includes a pair of spaced elongate support posts and a walling web extending between the support posts. The walling web is relatively thinner in cross-section compared to the support posts. The aspects of the design shown in dashed broken lines are optional and do not form an essential part of the design.

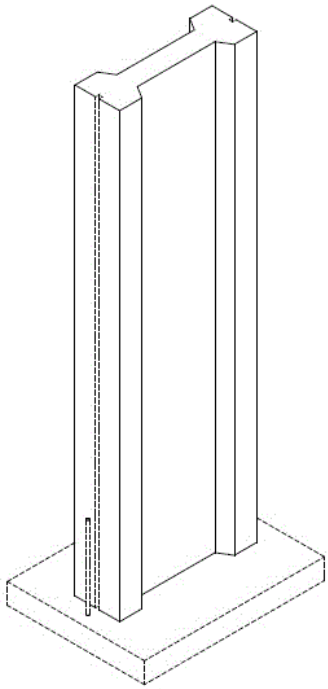

Three-dimensional view

21: A2026/00164 22: 2026-02-20 23:
43: 2025-08-22
52: Class 12 24: Part A
71: CHERY AUTOMOBILE CO., LTD.
33: CN 31: 2025304992325 32: 2025-08-22
54: AUTOMOBILES
57: The design is for an automobile in the form of a sport utility vehicle (SUV). A front fascia of the vehicle adopts a closed-off and overall plump profile comprising front lamp clusters featuring an oval, rounded-rectangular design which houses dual horizontal light structures, a flat, trapezium-shaped air intake filled with a vertical slat grille, and air ducts featuring diagonal decorative patterns flanking the grille. Sides of the vehicle are balanced with a straight roofline extending slightly rearward to form a small spoiler. A beltline is smooth, eschewing sharp creases. Wheel hubs utilise a largely closed, low-drag design. Door handles are recessed, and diagonal-patterned trim panels are situated behind C-pillars. A rear fascia comprises rear lamp clusters echoing the front lamp clusters, a clean bumper featuring symmetrical diagonal-patterned ornamentation, and a slender rear fog lamp or reflector embedded in a lower centre portion.

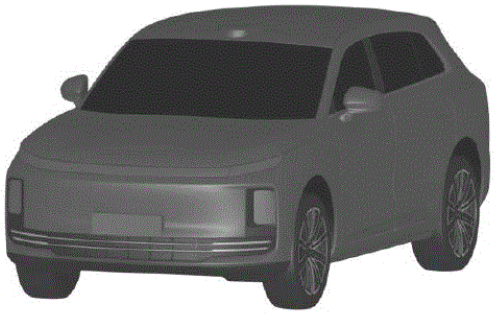

Figure 1
First three-dimensional view

21: A2026/00166 22: 2026-02-20 23:
43: 2026-02-20
52: Class 15 24: Part A
71: RHODES UNIVERSITY
54: BIOPRINTING BODY MODULE
57: The design is applied to a bioprinting body module that is part of a bioprinting arrangement comprising at least one plunger-based extrusion arrangement accommodated within the bioprinting body module. The features of the design for which protection is claimed include the shape and/or configuration of a bioprinting body module, substantially as illustrated in the accompanying representations.

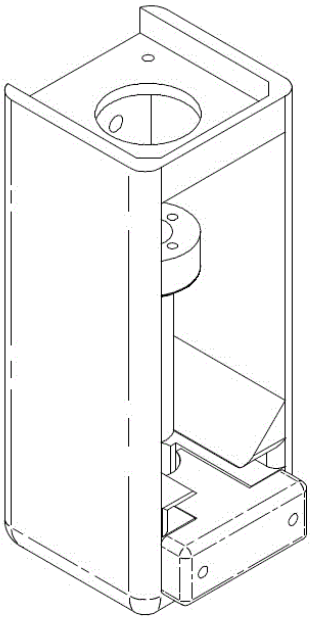

Three-dimensional view

21: A2026/00167 22: 2026-02-20 23:
43: 2026-02-20
52: Class 15 24: Part A
71: RHODES UNIVERSITY
54: BIOPRINTING BODY MODULE
57: The design is applied to a bioprinting body module that is part of a bioprinting arrangement comprising at least one plunger-based extrusion arrangement accommodated within the bioprinting body module. The features of the design for which protection is claimed include the shape and/or configuration of a bioprinting body module, substantially as illustrated in the accompanying representations.

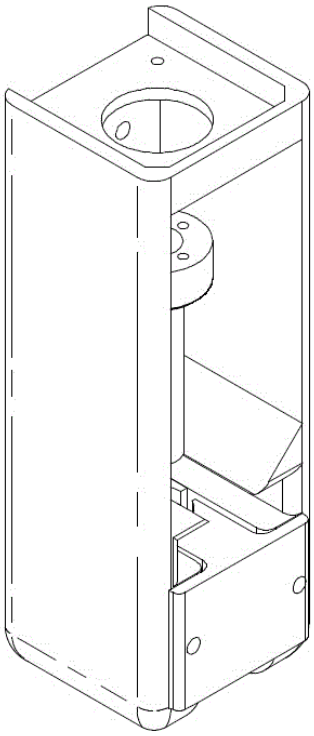

Three-dimensional view

21: A2026/00169 22: 2026-02-23 23:
43: 2025-11-26
52: Class 10 24: Part A
71: Turlen Holding SA
33: CH 31: 2025-00522 32: 2025-11-26
54: WATCHES
57: The design is for a watch. The watch has a general cuboidal case that curves downwardly at a top and bottom and that bulges outwardly at sides. The case is substantially transparent and houses working parts of the watch in an internal compartment, the working parts being visible from a front and rear, such that the watch features a skeletal-type appearance. The case further features

prominent peripherally spaced screws. A prominent crown having a circumferential pattern and a screw-type crown head is provided at a side of the case. A mesh is provided in the internal compartment below hour and minute watch hands, with the working parts of the watch below the mesh. The working parts feature a diagonally arranged support structure with prominent screws and gears.



Figure 1

First three-dimensional view

21: A2026/00170 22: 2026-02-23 23:
43: 2026-09-04
52: Class 12 24: Part A
71: COMMERCIAL AUTO COMPONENTS SA (PTY) LTD

54: ADJUSTABLE STYLING BAR

57: The features of the design for which protection is claimed reside in the shape and/or configuration and/or pattern and/or ornamentation of a styling bar for a vehicle, substantially as illustrated in Figures 1 to 7 of the accompanying representations.

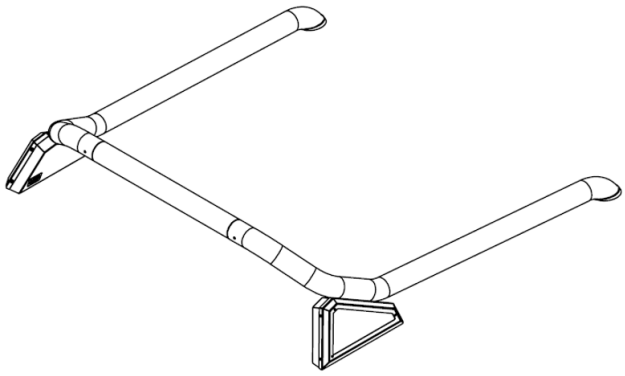

Front Perspective view

21: A2026/00171 22: 2026-02-24 23:
43: 2025-08-25
52: Class 12 24: Part A
71: CHERY AUTOMOBILE CO., LTD.
33: CN 31: 2025305029274 32: 2025-08-25

54: AUTOMOBILES

57: The design is for an automobile in the form of a hatchback vehicle. A front fascia of the vehicle has a closed-off aesthetic with an overall plump and contoured profile. Front lamp clusters feature an oval design, housing rounded internal light structures. An elongate intake with rounded rectangular corners, flanked by decorative elements with diagonal patterns, is provided at a lower portion of a front bumper. Sides of the vehicle feature straight rooflines extending rearwardly to form a short spoiler, wheel hubs adopting a largely closed, cross-shaped design with diagonal textures, recessed door handles, and a diagonal-patterned trim behind C-pillars. A rear fascia of the vehicle has rounded styling, with rear lamp clusters echoing the design of the front lamp clusters, and comprising dual-layer horizontal light units. A rear bumper features symmetrical diagonal-patterned decorative areas on either side.



Figure 1
First three-dimensional view

21: A2026/00174 22: 2026-02-24 23:
43: 2026-09-07
52: Class 3. 24: Part A
71: APPLE INC.
33: US 31: 30/019,737 32: 2025-08-25
54: Lanyard
57: The design relates to a lanyard. The features of the design are those of shape and/or configuration and/or ornamentation.

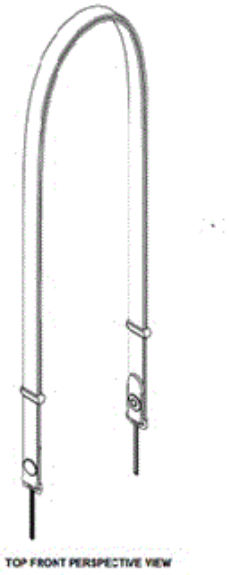

21: A2026/00178 22: 2026-02-25 23:
43: 2025-08-27
52: Class 28 24: Part A
71: JEMELLA GROUP LIMITED
33: GB 31: 6468273 32: 2025-08-27
54: HAIRDRYERS
57: The design is for a hairdryer comprising a cylindrical barrel body and a pistol-style handle projecting from the body from a proximate a rear end. The body bulges gently outwardly at its centre, and the rear end has a concentric textured pattern. The handle has a tapered, pointed bottom end with a series of circumferentially extending contour lines provided at a bottom end. The handle further includes at each of a front and a rear an obround recess, which respectively surround two buttons at the front and three buttons at the rear.



Figure 1

First three-dimensional view

21: A2026/00179 22: 2026-02-25 23:
43: 2025-08-27
52: Class 28 24: Part A
71: JEMELLA GROUP LIMITED
33: GB 31: 6468281 32: 2025-08-27
54: CURL DIFFUSERS
57: The design is for a curl diffuser. A body of the diffuser is bowl-shaped and includes a series of raised projections and a radiating pattern of oblong recesses on an inner surface of the body. An attachment collar is defined on a rear end of the body.

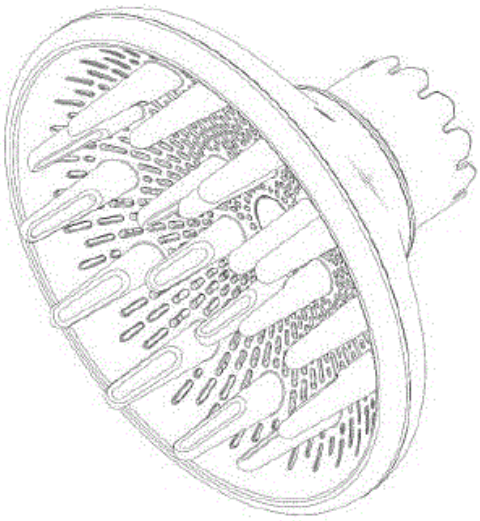

Figure 1

First three-dimensional view

21: A2026/00181 22: 2026-02-25 23:
43: 2026-09-07
52: Class 10. 24: Part A
71: ALCOHOL MONITORING SYSTEMS, INC. DBA SCRAM SYSTEMS
54: Wearable Continuous Alcohol Monitoring Device
57: The design relates to a wearable continuous alcohol monitoring device. The features of the design are those of shape and/or configuration and/or pattern and/or ornamentation.

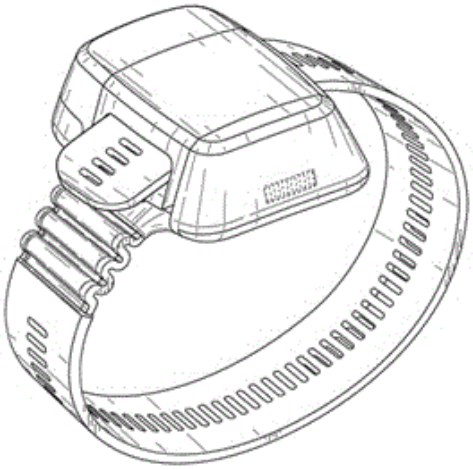

TOP PERSPECTIVE VIEW

21: A2026/00182 22: 2026-02-25 23:
43: 2026-09-07
52: Class 10. 24: Part A
71: ALCOHOL MONITORING SYSTEMS, INC. DBA SCRAM SYSTEMS
54: Wearable Continuous Alcohol Monitoring Device
57: The design relates to a wearable continuous alcohol monitoring device. The features of the design are those of shape and/or configuration and/or pattern and/or ornamentation.

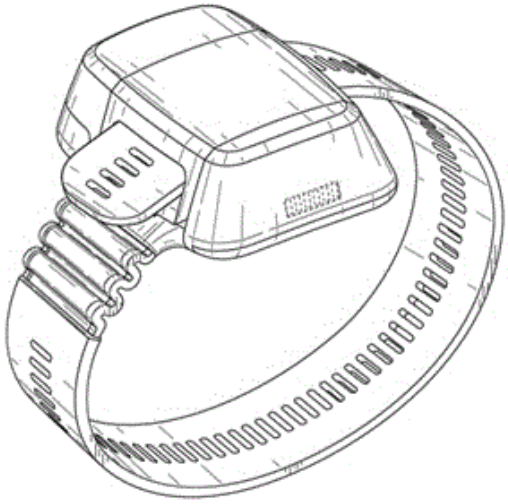

TOP PERSPECTIVE VIEW

21: A2026/00183 22: 2026-02-25 23:
43: 2026-09-07

52: Class 10. 24: Part A
71: ALCOHOL MONITORING SYSTEMS, INC. DBA SCRAM SYSTEMS
54: Wearable Continuous Alcohol Monitoring Device
57: The design relates to a wearable continuous alcohol monitoring device. The features of the design are those of shape and/or configuration and/or pattern and/or ornamentation.

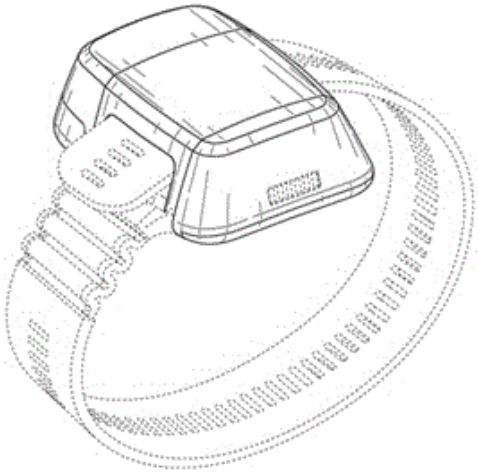

TOP PERSPECTIVE VIEW

21: A2026/00186 22: 2026-02-26 23:
43: 2025-08-27
52: Class 21 24: Part A
71: VILLANUEVA, Edward Jack Evans
33: US 31: 30/020,172 32: 2025-08-27
54: GOLF BALL MARKING TOOLS
57: The design is for a golf ball marking tool. The tool has an annular body comprising a flat inner surface, flat sides and a concave outer surface, with a central aperture configured to fit a golf ball. An elongate slot is provided in the body, the slot extending between the two sides for an arc of the body. Corresponding with the position of the slot, the body features a recess to expose the slot. A first side of the recess comprises a flat outer surface normal to the sides with a level lower than, but concentric with, the outer surface of the body. A second side of the open portion is inclined downwardly and inwardly from the outer surface to the slot.

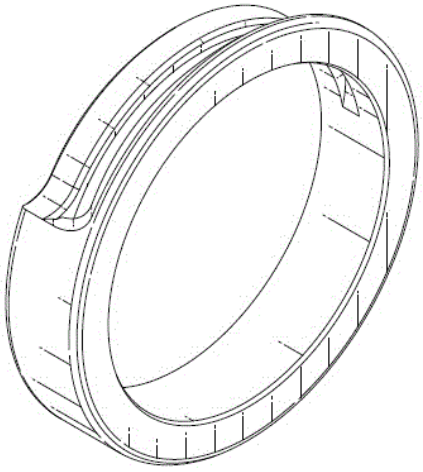

Figure 1
First three-dimensional view

21: A2026/00187 22: 2026-02-26 23:
43: 2025-08-27
52: Class 9 24: Part A
71: Stolle Machinery Company, LLC
33: US 31: 30/020,110 32: 2025-08-27
54: CAN ENDS
57: The design is for a can end for beverage containers and, more particularly, for a can end of an easy-open beverage can having a biased panel and unique embossed and debossed portions that create a distinct aesthetic appearance compared to conventional beverage can ends.

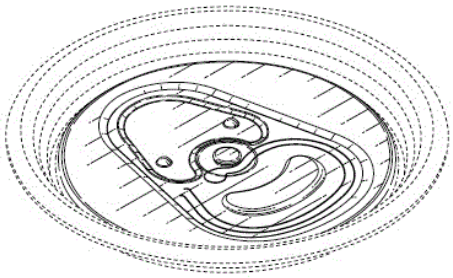

Figure 1
First three-dimensional view

21: A2026/00188 22: 2026-02-26 23:
43: 2025-08-27
52: Class 9 24: Part A
71: Stolle Machinery Company, LLC
33: US 31: 30/020,110 32: 2025-08-27
54: CAN ENDS
57: The design is for a can end for beverage containers and, more particularly, for a can end of an easy-open beverage can having a biased panel and

unique embossed and debossed portions that create a distinct aesthetic appearance compared to conventional beverage can ends.

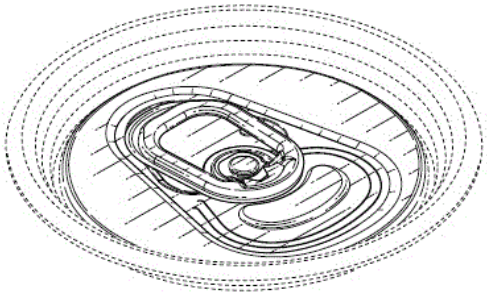

Figure 1
Three-dimensional view

21: A2026/00189 22: 2026-02-26 23:
43: 2026-09-07
52: Class 14. 24: Part A
71: APPLE INC.
33: US 31: 30/020,737 32: 2025-08-29
54: Earphone
57: The design relates to an earphone. The features of the design are those of shape and/or configuration and/or ornamentation.



FRONT PERSPECTIVE VIEW

21: A2026/00190 22: 2026-02-26 23:
43: 2026-09-07
52: Class 13. 24: Part A
71: APPLE INC.
33: US 31: 30/020,738 32: 2025-08-29
54: Case for Earphones
57: The design relates to a case for earphones. The features of the design are those of shape and/or configuration and/or ornamentation.



TOP AND FRONT PERSPECTIVE VIEW

21: A2026/00191 22: 2026-02-26 23:
43: 2026-09-07
52: Class 3. 24: Part A
71: APPLE INC.
33: US 31: 30/020,472 32: 2025-08-28
54: Case for an Electronic Device
57: The design relates to a case for an electronic device. The features of the design are those of shape and/or configuration and/or ornamentation.

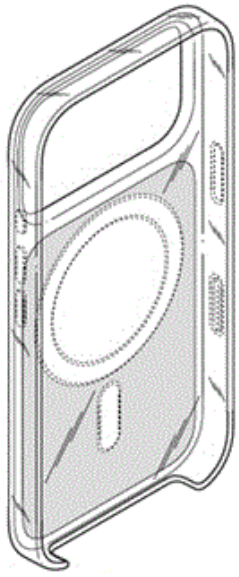

TOP FRONT AND LEFT SIDE PERSPECTIVE VIEW

21: A2026/00192 22: 2026-02-26 23:
43: 2026-09-07

52: Class 3. 24: Part A
71: APPLE INC.
33: US 31: 30/020,472 32: 2025-08-28
54: Case for an Electronic Device
57: The design relates to a case for an electronic device. The features of the design are those of shape and/or configuration and/or ornamentation.

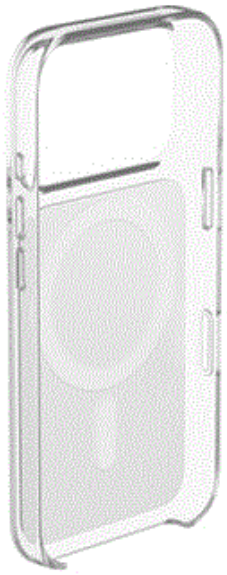

TOP, FRONT AND LEFT SIDE PERSPECTIVE VIEW

21: A2026/00211 22: 2026-02-27 23:
43: 2026-09-04
52: Class 12 24: Part A
71: RSI NORTH AMERICA, INC.
33: US 31: 30/020,471 32: 2025-08-28
54: SADDLEBAG DRAWER
57: The features of the design for which protection is claimed reside in the shape and/or configuration and/or pattern and/or ornamentation of a saddlebag drawer substantially as illustrated in Figures 1 to 8 of the accompanying representations, irrespective of the design of the canopy or the mounting brackets shown in Figure 9. Features shown in broken lines in the representations do not form part of the design and are disclaimed.

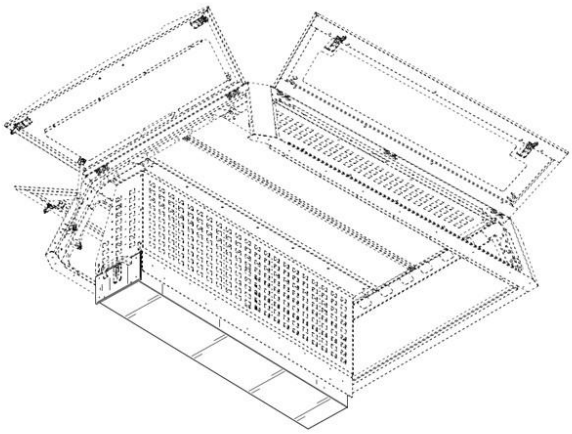

Figure 1

Perspective view

21: A2026/00217 22: 2026-03-03 23:
43: 2026-10-05
52: Class 09 24: Part A
71: NEOSIMPLIX CO., LTD
33: KR 31: 30-2025-0037002 32: 2025-09-11
54: COSMETIC CONTAINER
57: The features of the design for which protection is claimed are those of the shape and/or configuration of a cosmetic container substantially as illustrated in the accompanying drawing. The writing and the signage on the container do not form a part of the design.



21: A2026/00218 22: 2026-03-03 23:
43: 2026-10-05
52: Class 09 24: Part A
71: NEOSIMPLIX CO., LTD
33: KR 31: 30-2025-0037003 32: 2025-09-11
54: COSMETIC CONTAINER
57: The features of the design for which protection is claimed are those of the shape and/or configuration of a cosmetic container substantially as illustrated in the accompanying drawing. The writing and the signage on the container do not form a part of the design.



21: A2026/00219 22: 2026-03-03 23:
43: 2026-10-05
52: Class 09 24: Part A
71: NEOSIMPLIX CO., LTD
33: KR 31: 3 0-2025-0037004 32: 2025-09-11
54: COSMETIC CONTAINER
57: The features of the design for which protection is claimed are those of the shape and/or configuration of a cosmetic container substantially as illustrated in the accompanying drawing. The writing and the signage on the container do not form a part of the design.



21: A2026/00220 22: 2026-03-03 23:
43: 2026-10-05
52: Class 09 24: Part A
71: NEOSIMPLIX CO., LTD
33: KR 31: 30-2025-0037005 32: 2025-09-11
54: COSMETIC CONTAINER
57: The features of the design for which protection is claimed are those of the shape and/or configuration of a cosmetic container substantially as illustrated in the accompanying drawing. The writing and the signage on the container do not form a part of the design.



21: A2026/00224 22: 2026-03-04 23:
43: 2026-10-05
52: Class 25 24: Part A
71: Werner POTGIETER
54: FENCE CAP
57: The features of the design for which protection is claimed reside in the shape and/or configuration and/or pattern and/or ornamentation of a fence cap, substantially as shown in the accompanying representations.

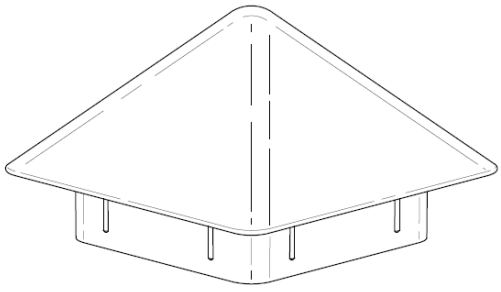

21: A2026/00258 22: 2026-03-17 23:
43: 2026-10-08
52: Class 27 24: Part A
71: PHILIP MORRIS PRODUCTS S.A.
33: EU 31: 015117358-0001 32: 2025-09-18
54: ELECTRONIC CIGARETTE
57: The design is to be applied to an electronic cigarette. The features for which protection is claimed are those of shape and/or configuration and/or pattern and/or ornamentation, substantially as shown in the representations. The elements drawn in broken lines are for illustrative purposes only and form no part of the claimed design.

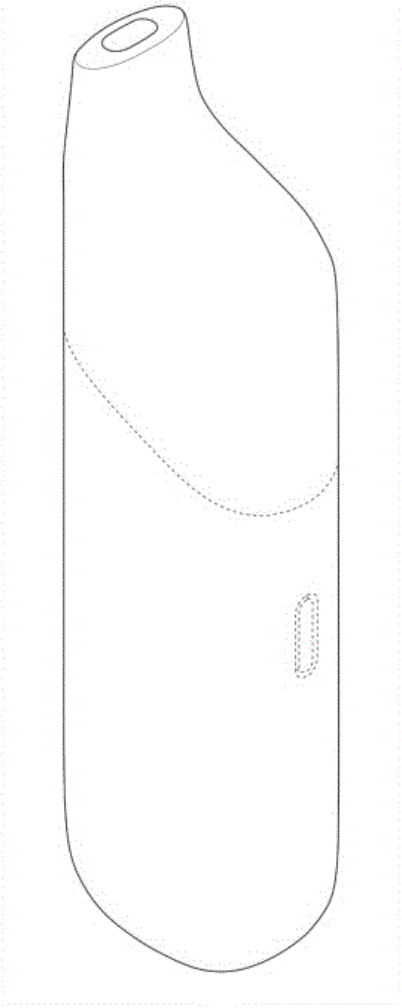

PERSPECTIVE VIEW

21: A2026/00259 22: 2026-03-17 23:
43: 2026-10-08
52: Class 27 24: Part A
71: PHILIP MORRIS PRODUCTS S.A.
33: EU 31: 015117358-0003 32: 2025-09-18
54: ELECTRONIC CIGARETTE
57: The design is to be applied to an electronic cigarette. The features for which protection is claimed are those of shape and/or configuration and/or pattern and/or ornamentation, substantially as shown in the representations. The elements drawn in broken lines are for illustrative purposes only and

form no part of the claimed design. The dash-dot lines are also disclaimed and indicate boundary between claimed and disclaimed parts.

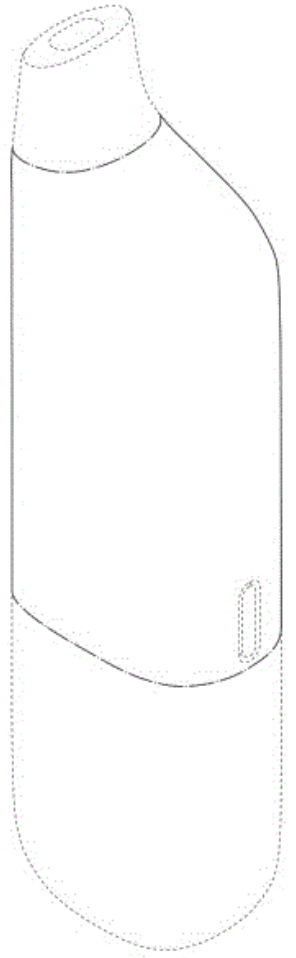

PERSPECTIVE VIEW

21: A2026/00260 22: 2026-03-17 23:
43: 2026-10-08
52: Class 27 24: Part A
71: PHILIP MORRIS PRODUCTS S.A.
33: EU 31: 015117358-0009 32: 2025-09-18
54: ELECTRONIC CIGARETTE BODY
57: The design is to be applied to an electronic cigarette body. The features for which protection is claimed are those of shape and/or configuration and/or pattern and/or ornamentation, substantially as shown in the representations. The elements drawn in broken lines are for illustrative purposes only and form no part of the claimed design. The dash-dot lines are also disclaimed and indicate boundary between claimed and disclaimed parts.

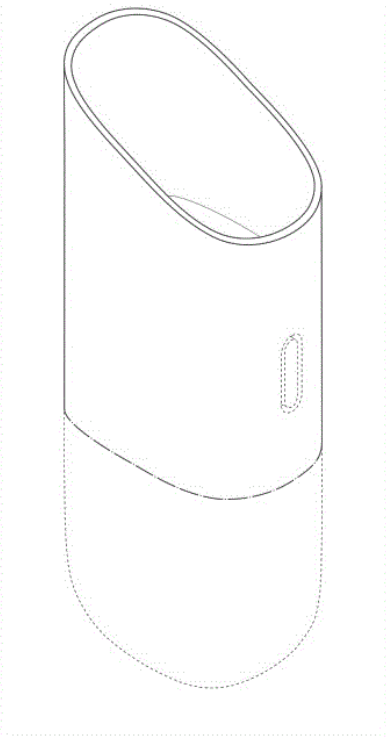

FIRST PERSPECTIVE VIEW

21: A2026/00261 22: 2026-03-17 23:
43: 2026-10-08
52: Class 27 24: Part A
71: PHILIP MORRIS PRODUCTS S.A.
33: EU 31: 015117358-0002 32: 2025-09-18
54: ELECTRONIC CIGARETTE
57: The design is to be applied to an electronic cigarette. The features for which protection is claimed are those of shape and/or configuration and/or pattern and/or ornamentation, substantially as shown in the representations. The elements drawn in broken lines are for illustrative purposes only and form no part of the claimed design. The dash-dot lines are also disclaimed and indicate boundary between claimed and disclaimed parts.

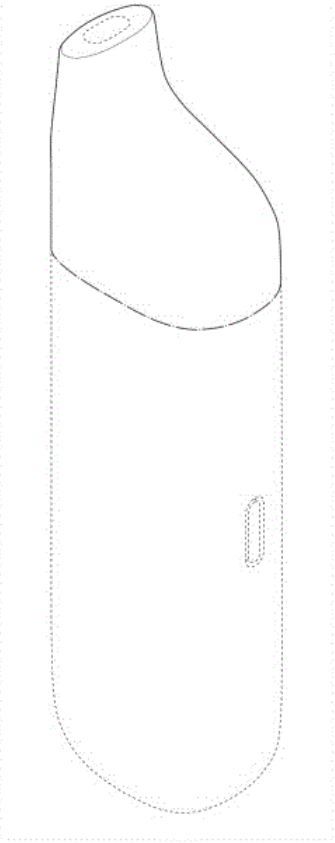

PERSPECTIVE VIEW

21: A2026/00262 22: 2026-03-17 23:
43: 2026-10-08
52: Class 27 24: Part A
71: PHILIP MORRIS PRODUCTS S.A.
33: EU 31: 015117358-0008 32: 2025-09-18

54: ELECTRONIC CIGARETTE BODY

57: The design is to be applied to an electronic cigarette body. The features for which protection is claimed are those of shape and/or configuration and/or pattern and/or ornamentation, substantially as shown in the representations. The elements drawn in broken lines are for illustrative purposes only and form no part of the claimed design.

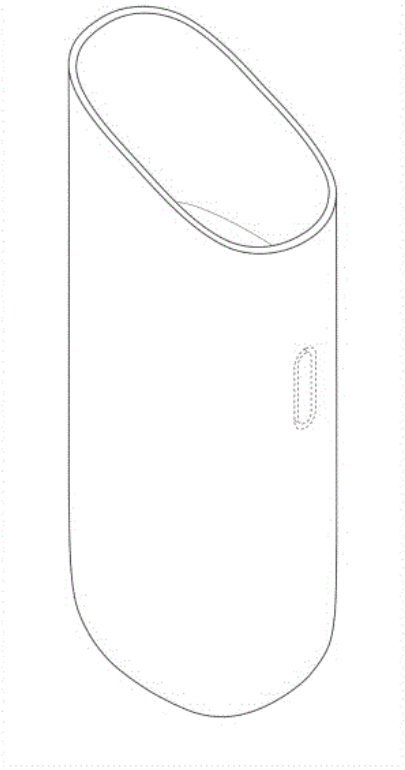

FIRST PERSPECTIVE VIEW

21: A2026/00263 22: 2026-03-17 23:
43: 2026-10-08
52: Class 27 24: Part A
71: PHILIP MORRIS PRODUCTS S.A.
33: EU 31: 015117358-0007 32: 2025-09-18

54: CONSUMABLE FOR ELECTRONIC CIGARETTES, IN PARTICULAR A POD FOR AN ELECTRONIC CIGARETTE

57: The design is to be applied to a consumable for electronic cigarettes, in particular a pod for an electronic cigarette. The features for which protection is claimed are those of shape and/or configuration and/or pattern and/or ornamentation, substantially as shown in the representations. The elements drawn in broken lines are for illustrative purposes only and form no part of the claimed design. The dash-dot lines are also disclaimed and indicate boundary between claimed and disclaimed parts.

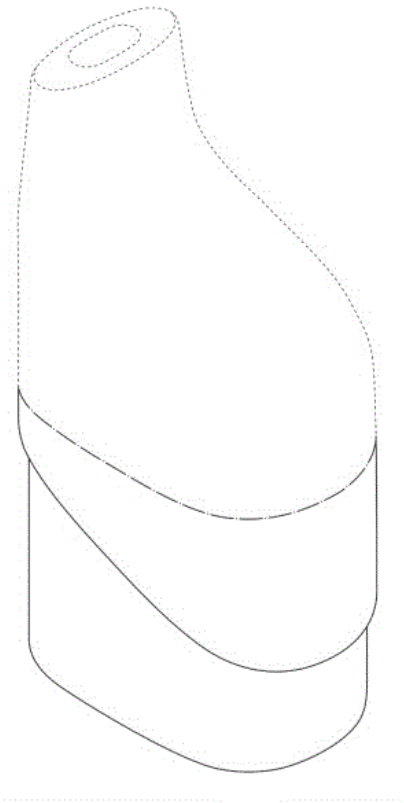

TOP PERSPECTIVE VIEW

21: A2026/00264 22: 2026-03-17 23:
43: 2026-10-08
52: Class 27 24: Part A
71: PHILIP MORRIS PRODUCTS S.A.
33: EU 31: 015117358-0004 32: 2025-09-18
54: CONSUMABLE FOR ELECTRONIC CIGARETTES, IN PARTICULAR A POD FOR AN ELECTRONIC CIGARETTE
57: The design is to be applied to a consumable for electronic cigarettes, in particular a pod for an electronic cigarette. The features for which protection is claimed are those of shape and/or configuration and/or pattern and/or ornamentation, substantially as shown in the representations. The elements drawn in broken lines are for illustrative purposes only and form no part of the claimed design

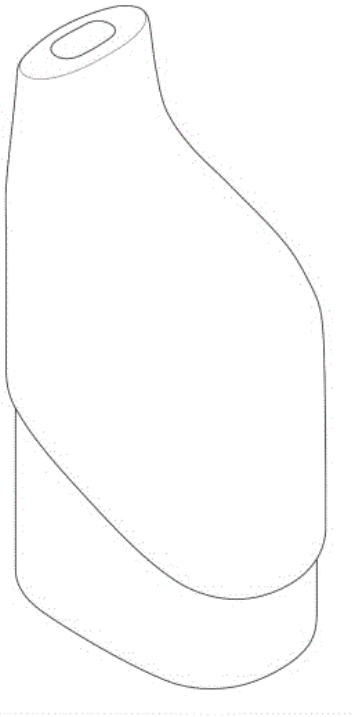

TOP PERSPECTIVE VIEW

21: A2026/00265 22: 2026-03-17 23:
43: 2026-10-08
52: Class 27 24: Part A
71: PHILIP MORRIS PRODUCTS S.A.
33: EU 31: 015117358-0010 32: 2025-09-18
54: ELECTRONIC CIGARETTE BODY
57: The design is to be applied to an electronic cigarette body. The features for which protection is claimed are those of shape and/or configuration and/or pattern and/or ornamentation, substantially as shown in the representations. The elements drawn in broken lines are for illustrative purposes only and form no part of the claimed design. The dash-dot lines are also disclaimed and indicate boundary between claimed and disclaimed parts.

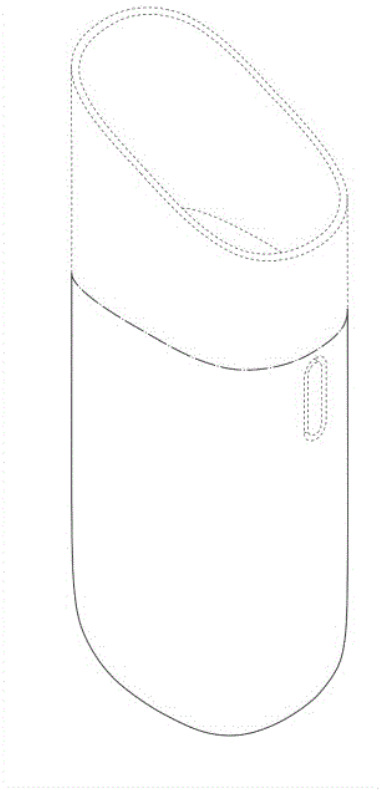

FIRST PERSPECTIVE VIEW

21: A2026/00266 22: 2026-03-17 23:
43: 2026-10-08
52: Class 27 24: Part A
71: PHILIP MORRIS PRODUCTS S.A.
33: EU 31: 015117358-0006 32: 2025-09-18
54: CONSUMABLE FOR ELECTRONIC CIGARETTES, IN PARTICULAR A POD FOR AN ELECTRONIC CIGARETTE
57: The design is to be applied to a consumable for electronic cigarettes, in particular a pod for an electronic cigarette. The features for which protection is claimed are those of shape and/or configuration and/or pattern and/or ornamentation, substantially as shown in the representations. The elements drawn in broken lines are for illustrative purposes only and form no part of the claimed design. The dash-dot lines are also disclaimed and indicate boundary between claimed and disclaimed parts.

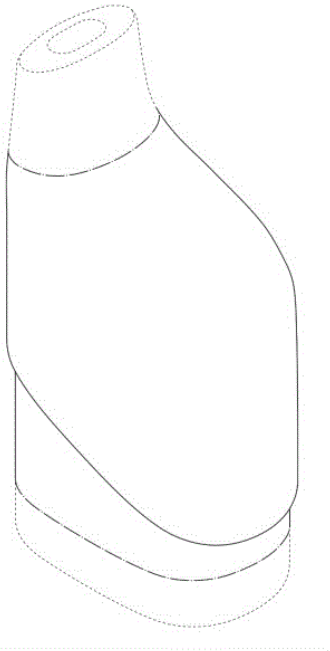

TOP PERSPECTIVE VIEW

21: A2026/00267 22: 2026-03-17 23:
43: 2026-10-08
52: Class 27 24: Part A
71: PHILIP MORRIS PRODUCTS S.A.
33: EU 31: 015117358-0005 32: 2025-09-18
54: CONSUMABLE FOR ELECTRONIC CIGARETTES, IN PARTICULAR A POD FOR AN ELECTRONIC CIGARETTE
57: The design is to be applied to a consumable for electronic cigarettes, in particular a pod for an electronic cigarette. The features for which protection is claimed are those of shape and/or configuration and/or pattern and/or ornamentation, substantially as shown in the representations. The elements drawn in broken lines are for illustrative purposes only and form no part of the claimed design.

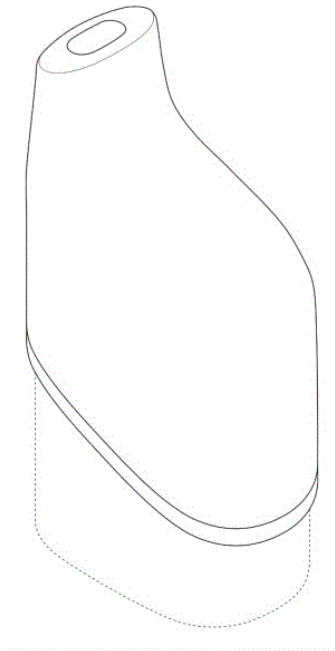

TOP PERSPECTIVE VIEW

21: A2026/00291 22: 2026-03-18 23:
43: 2026-10-06
52: Class 24 24: Part A
71: NASIR, Muhammed Aslam, INTERSURGICAL AG
33: EU 31: 015117372-0010 32: 2025-09-18
54: AIRWAY DEVICE
57: The design is applied to an airway device. The features of the design for which protection is claimed are those of the shape and/or configuration and/or pattern and/or ornamentation of the airway device. Features shown in broken lines do not form part of the design and are disclaimed.

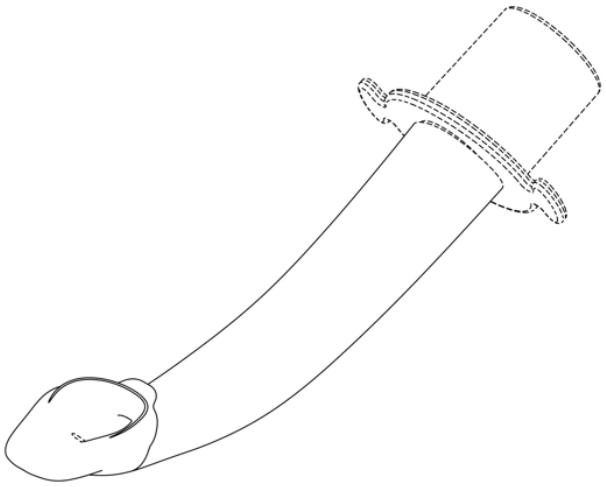

21: A2026/00292 22: 2026-03-18 23:
43: 2026-10-06
52: Class 24 24: Part A
71: NASIR, Muhammed Aslam, INTERSURGICAL AG
33: EU 31: 015117372-0014 32: 2025-09-18
54: AIRWAY DEVICE
57: The design is applied to an airway device. The features of the design for which protection is claimed are those of the shape and/or configuration and/or pattern and/or ornamentation of the airway device. Features shown in broken lines do not form part of the design and are disclaimed.

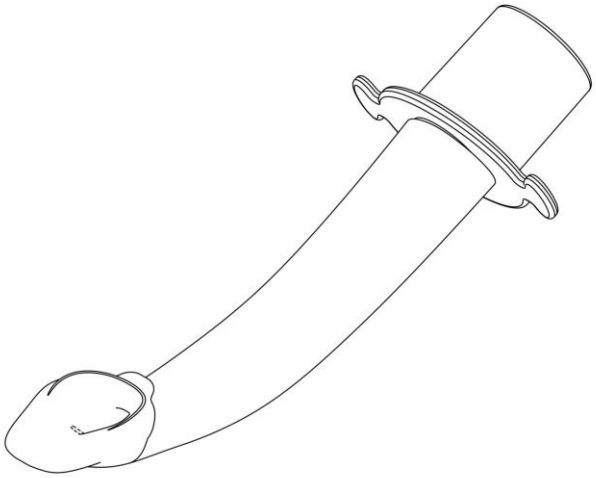

21: A2026/00293 22: 2026-03-18 23:
43: 2026-10-06
52: Class 24 24: Part A
71: NASIR, Muhammad Aslam, INTERSURGICAL AG
33: EU 31: 015117372-0013 32: 2025-09-18
54: AIRWAY DEVICE
57: The design is applied to an airway device. The features of the design for which protection is claimed are those of the shape and/or configuration and/or pattern and/or ornamentation of the airway device. Features shown in broken lines do not form part of the design and are disclaimed.

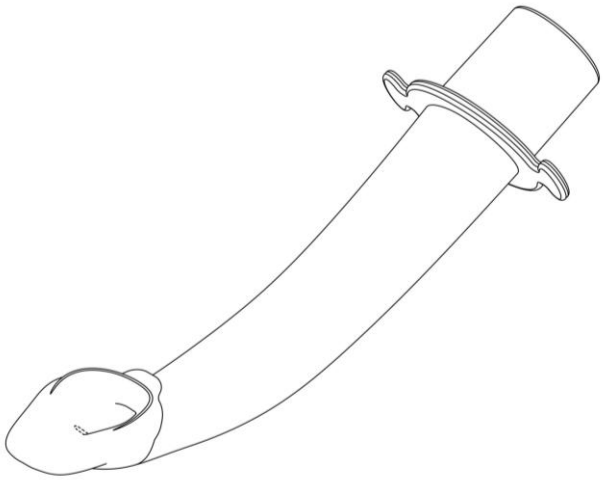

21: A2026/00294 22: 2026-03-18 23:
43: 2026-10-06
52: Class 24 24: Part A
71: NASIR, Muhammed Aslam, INTERSURGICAL AG
33: EU 31: 015117372-0011 32: 2025-09-18
54: AIRWAY DEVICE
57: The design is applied to an airway device. The features of the design for which protection is claimed are those of the shape and/or configuration and/or pattern and/or ornamentation of the airway device. Features shown in broken lines do not form part of the design and are disclaimed.

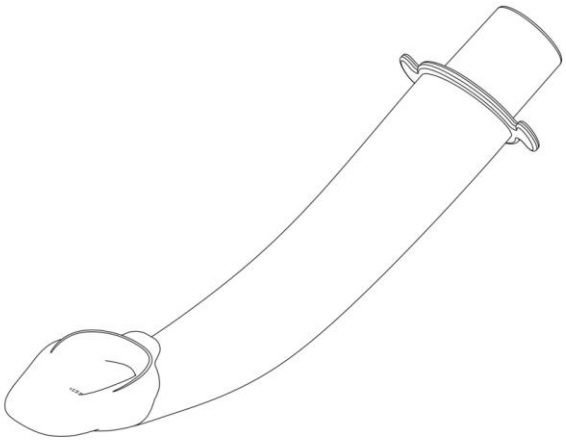

21: A2026/00295 22: 2026-03-18 23:
43: 2026-10-06
52: Class 24 24: Part A
71: NASIR, Muhammed Aslam, INTERSURGICAL AG
33: EU 31: 015117372-0001 32: 2025-09-18
54: AIRWAY DEVICE
57: The design is applied to an airway device. The features of the design for which protection is claimed are those of the shape and/or configuration and/or pattern and/or ornamentation of the airway device.

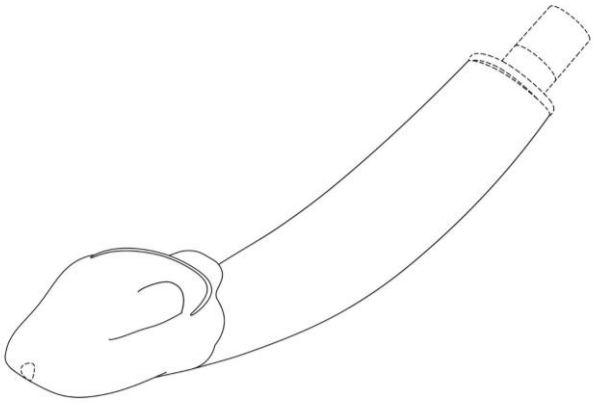

21: A2026/00296 22: 2026-03-18 23:
43: 2026-10-06
52: Class 24 24: Part A
71: NASIR, Muhammed Aslam, INTERSURGICAL AG
33: EU 31: 015117372-0007 32: 2025-09-18
54: AIRWAY DEVICE
57: The design is applied to an airway device. The features of the design for which protection is claimed are those of the shape and/or configuration and/or pattern and/or ornamentation of the airway device.

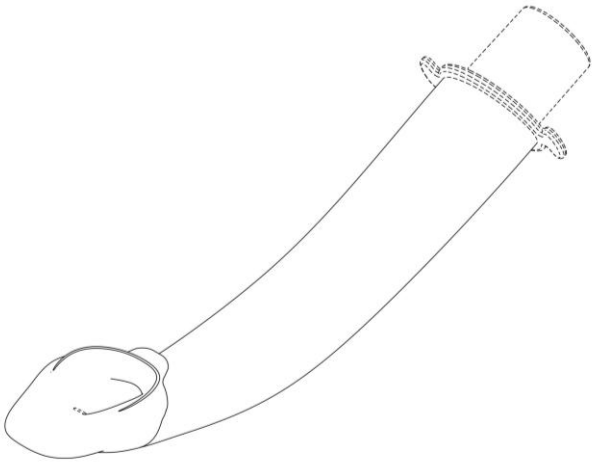

21: A2026/00297 22: 2026-03-18 23:
43: 2026-10-06
52: Class 24 24: Part A
71: NASIR, Muhammed Aslam, INTERSURGICAL AG
33: EU 31: 15117372-0002 32: 2025-09-18
54: AIRWAY DEVICE
57: The design is applied to an airway device. The features of the design for which protection is claimed

are those of the shape and/or configuration and/or pattern and/or ornamentation of the airway device.

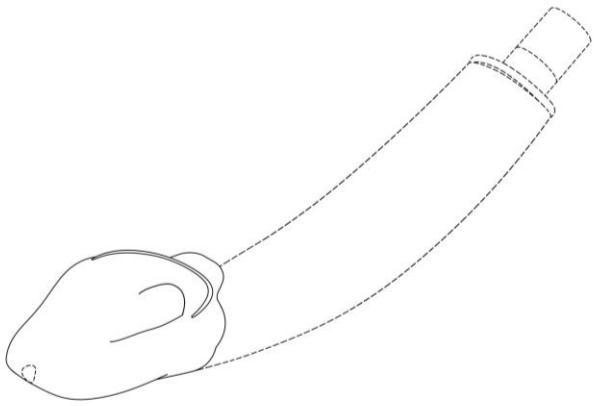

21: A2026/00298 22: 2026-03-18 23:
43: 2026-10-06
52: Class 24 24: Part A
71: NASIR, Muhammed Aslam, INTERSURGICAL AG
33: EU 31: 015117372-0012 32: 2025-09-18
54: AIRWAY DEVICE
57: The design is applied to an airway device. The features of the design for which protection is claimed are those of the shape and/or configuration and/or pattern and/or ornamentation of the airway device. Features shown in broken lines do not form part of the design and are disclaimed.

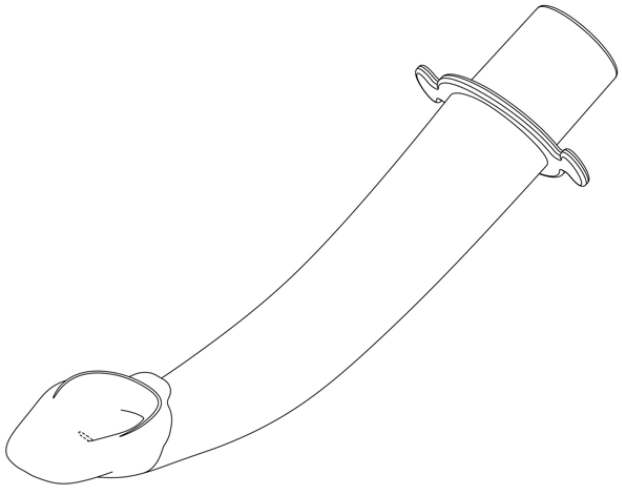

21: A2026/00300 22: 2026-03-18 23:
43: 2026-10-06
52: Class 24 24: Part A
71: NASIR, Muhammed Aslam, INTERSURGICAL AG
33: EU 31: 015117372-0003 32: 2025-09-18
54: AIRWAY DEVICE
57: The design is applied to an airway device. The features of the design for which protection is claimed are those of the shape and/or configuration and/or pattern and/or ornamentation of the airway device.

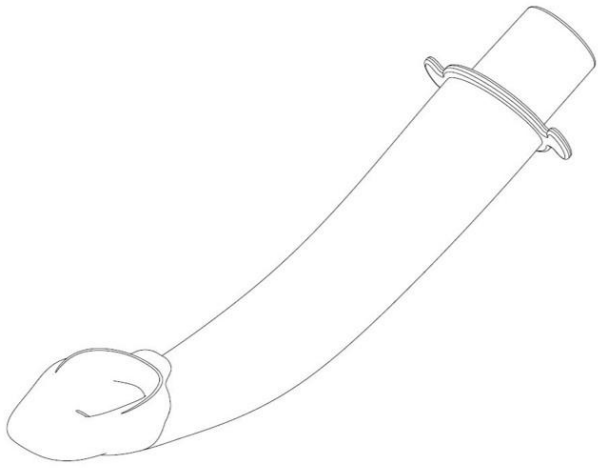

21: A2026/00301 22: 2026-03-18 23:
43: 2026-10-06
52: Class 24 24: Part A
71: NASIR, Muhammed Aslam, INTERSURGICAL AG
33: EU 31: 015117372-0004 32: 2025-09-18
54: AIRWAY DEVICE
57: The design is applied to an airway device. The features of the design for which protection is claimed are those of the shape and/or configuration and/or pattern and/or ornamentation of the airway device.

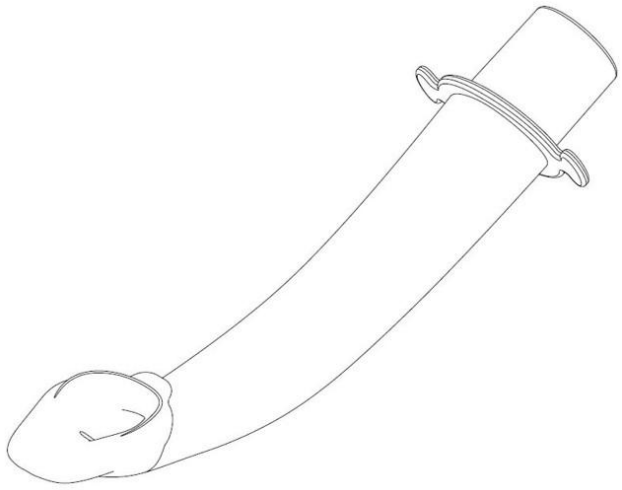

21: A2026/00302 22: 2026-03-18 23:
43: 2026-10-06
52: Class 24 24: Part A
71: NASIR, Muhammed Aslam, INTERSURGICAL AG

33: EU 31: 015117372-0008 32: 2025-09-18
54: AIRWAY DEVICE
57: The design is applied to an airway device. The features of the design for which protection is claimed are those of the shape and/or configuration and/or pattern and/or ornamentation of the airway device. Features shown in broken lines do not form part of the design and are disclaimed.

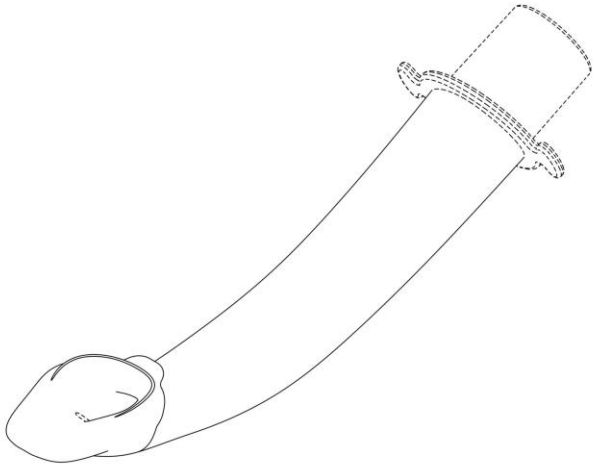

21: A2026/00303 22: 2026-03-18 23:
43: 2026-10-06
52: Class 24 24: Part A
71: NASIR, Muhammed Aslam, INTERSURGICAL AG
33: EU 31: 015117372-0009 32: 2025-09-18
54: AIRWAY DEVICE
57: The design is applied to an airway device. The features of the design for which protection is claimed are those of the shape and/or configuration and/or pattern and/or ornamentation of the airway device. Features shown in broken lines do not form part of the design and are disclaimed.

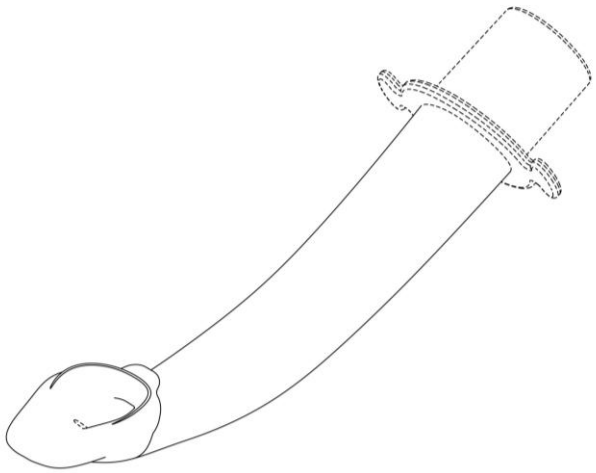

21: A2026/00304 22: 2026-03-18 23:
43: 2026-10-06
52: Class 24 24: Part A
71: NASIR, Muhammed Aslam, INTERSURGICAL AG
33: EP 31: 015117372-0005 32: 2025-09-18
54: AIRWAY DEVICE
57: The design is applied to an airway device. The features of the design for which protection is claimed are those of the shape and/or configuration and/or pattern and/or ornamentation of the airway device.

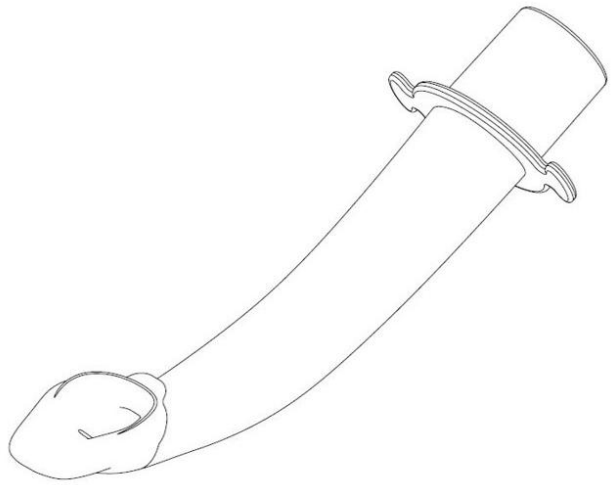

21: A2026/00305 22: 2026-03-18 23:
43: 2026-10-06
52: Class 24 24: Part A
71: NASIR, Muhammed Aslam, INTERSURGICAL AG
33: EP 31: 015117372-0006 32: 2025-09-18
54: AIRWAY DEVICE
57: The design is applied to an airway device. The features of the design for which protection is claimed are those of the shape and/or configuration and/or pattern and/or ornamentation of the airway device.

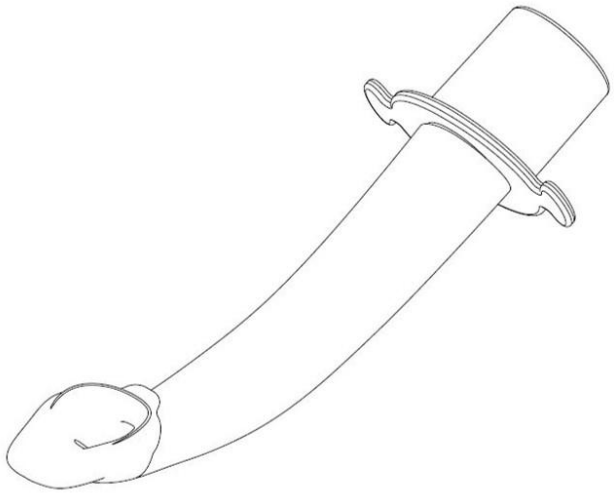

21: A2026/00333 22: 2026-03-26 23:
43: 2026-10-06
52: Class 09 24: Part A
71: RELIANCE CONSUMER PRODUCTS LIMITED
33: IN 31: 474960-001 32: 2025-09-26
54: BOTTLE
57: The design is applied to a bottle. The features of the design for which protection is claimed are those of the shape and/or configuration and/or pattern and/or ornamentation of the bottle.

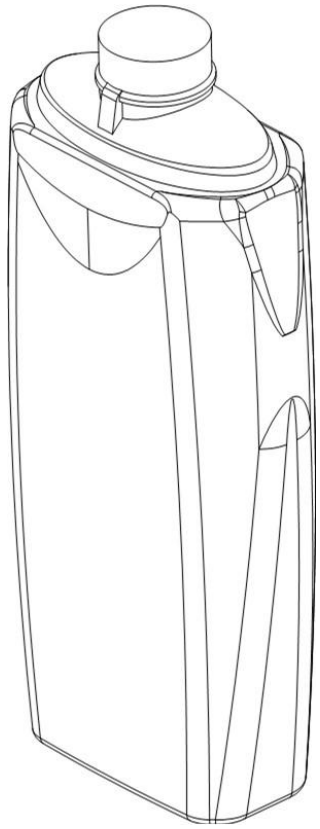

21: A2026/00334 22: 2026-03-26 23:
43: 2026-10-06
52: Class 09 24: Part A
71: RELIANCE CONSUMER PRODUCTS LIMITED
33: IN 31: 474962-001 32: 2025-09-26
54: TOTTLE
57: The design is applied to a tottle. The features of the design for which protection is claimed are those of the shape and/or configuration and/or pattern and/or ornamentation of the tottle.

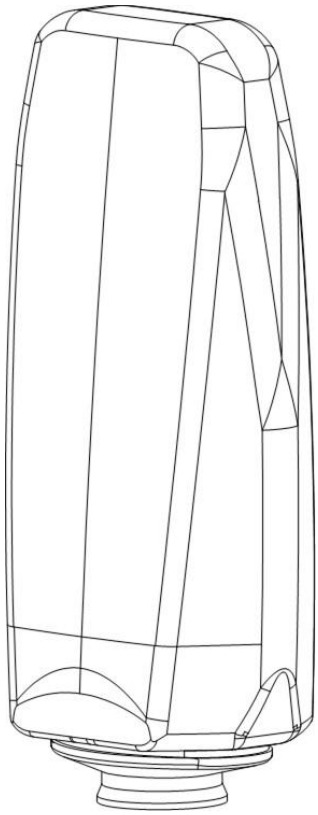

21: A2026/00335 22: 2026-03-26 23:
43: 2026-10-06
52: Class 09 24: Part A
71: RELIANCE CONSUMER PRODUCTS LIMITED
33: IN 31: 474964-001 32: 2025-09-26
54: BOTTLE
57: The design is applied to a bottle. The features of the design for which protection is claimed are those of the shape and/or configuration and/or pattern and/or ornamentation of the bottle.

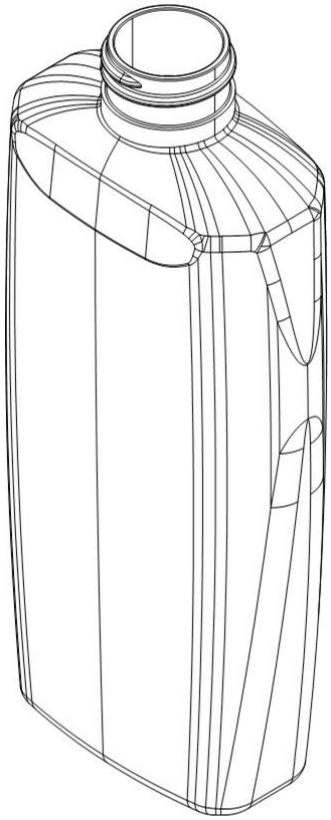

21: A2026/00347 22: 2026-03-31 23:
43: 2026-10-05
52: Class 26 24: Part A
71: KILNHOUSE DESIGN STUDIO (PROPRIETARY) LIMITED
54: LIGHTSHADE
57: The features of the design for which protection is claimed reside in the shape and/or configuration and/or pattern of a lightshade as substantially show in the accompanying representations.

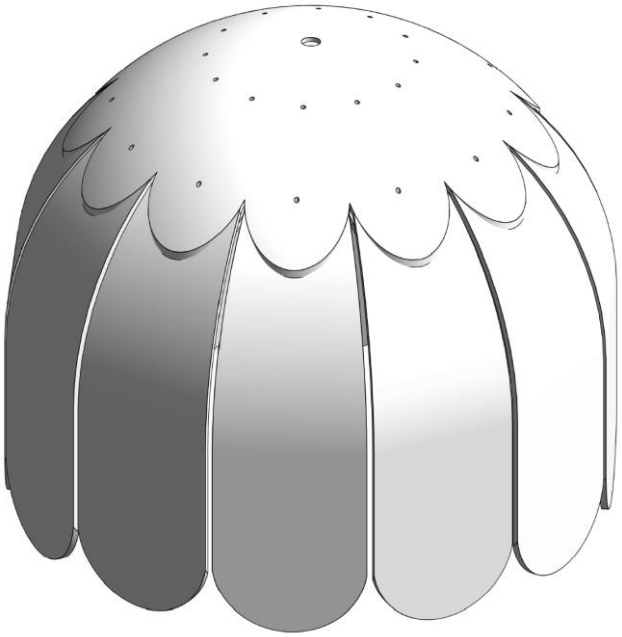

21: A2026/00348 22: 2026-03-31 23:
43: 2026-10-05
52: Class 26 24: Part A
71: KILNHOUSE DESIGN STUDIO (PROPRIETARY) LIMITED
54: LIGHTSHADE
57: The features of the design for which protection is claimed reside in the shape and/or configuration and/or pattern of a lightshade as substantially show in the accompanying representations, and irrespective of the number of repeating elements of the lightshade.

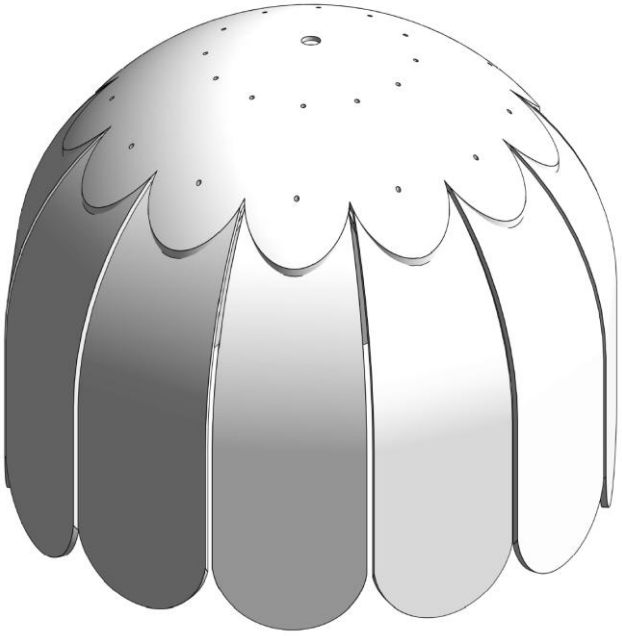

21: A2026/00355 22: 2026-04-02 23:
43: 2026-11-03
52: Class 08 24: Part A
71: Zhejiang Chuanghang Packaging Material Co.,Ltd
54: CLAMPS [TOOLS]
57: The features of the design for which protection is claimed reside in the shape and/or configuration and/or pattern of a clamp as substantially shown in the accompanying representations.



21: A2026/00356 22: 2026-04-02 23:
43: 2026-11-03
52: Class 08 24: Part A
71: Zhejiang Chuanghang Packaging Material Co.,Ltd
54: CLAMPS [TOOLS]
57: The features of the design for which protection is claimed reside in the shape and/or configuration and/or pattern of a clamp as substantially shown in the accompanying representations.

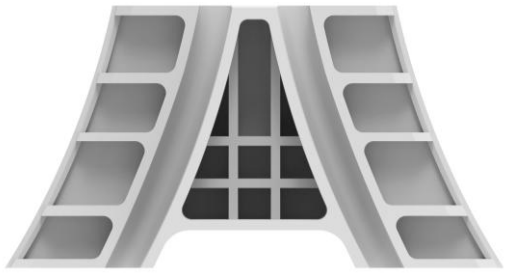

21: A2026/00357 22: 2026-04-02 23:
43: 2026-11-03
52: Class 08 24: Part A
71: Zhejiang Chuanghang Packaging Material Co.,Ltd
54: CLAMPS [TOOLS]
57: The features of the design for which protection is claimed reside in the shape and/or configuration and/or pattern of a clamp as substantially shown in the accompanying representations.

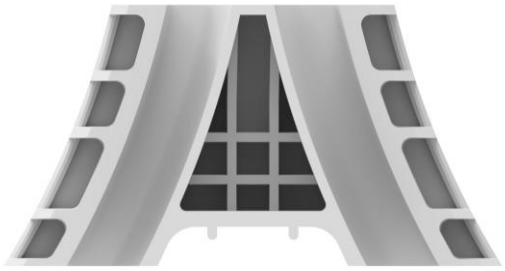

21: A2026/00447 22: 2026-04-24 23:
43: 2026-11-03
52: Class 12 24: Part A
71: DOMETIC VEHICLE OUTFITTERS SA (PTY) LTD
33: US 31: 30/030,820 32: 2025-10-31
54: VEHICLE RACK
57: The design is to be applied to a vehicle rack. The features for which protection is claimed are those of shape and/or configuration and/or pattern and/or ornamentation, substantially as shown in the representations.



21: A2026/00449 22: 2026-04-24 23:
43: 2026-11-03
52: Class 12 24: Part A
71: DOMETIC VEHICLE OUTFITTERS SA (PTY) LTD
33: US 31: 30/030,820 32: 2025-10-31

54: COMPONENT OF A VEHICLE RACK
57: The design is to be applied to a component of a vehicle rack. The features for which protection is claimed are those of pattern and/or shape and/or configuration and/or ornamentation, substantially as shown in the representations.



21: A2026/01112 22: 2026-09-21 23:
43: 2026-10-09
52: Class 7 24: Part A
71: Zhejiang Tahai INDUSTRY & TRADE Co., Ltd.
54: ELECTRIC COOKING POT
57: The design relates to a Electric cooking pot. The features of the design are those of shape and/or pattern and/or configuration and/or ornamentation.



21: F2020/00186 22: 2020-02-13 23:
43: 2019-08-14
52: Class 23 24: Part F
71: Turret IP Pty Ltd
33: AU 31: 201914575 32: 2019-08-14
54: LIQUID INTAKES
57: The design is for a liquid intake for use with a pumping apparatus. The liquid intake comprises a generally saucer-shaped body having a convexly curved upper cover, a peripherally extending side wall and a lower base. The upper cover includes a centrally positioned circular formation within a second larger circular formation, and a series of D-shaped sections that are spaced equidistantly about a circumference.

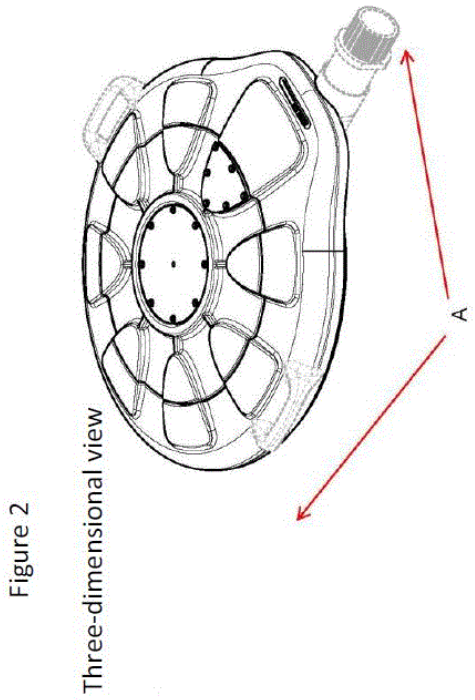

Figure 2
Three-dimensional view

21: F2022/01390 22: 2022-11-04 23:
43: 2026-10-13
52: Class 2502 24: Part F
71: BUZANI MESHACK MKHUMA
54: FLUID DISTRIBUTION DEVICE
57: The features of the design for which novelty is claimed are the shape and / or configuration and / or pattern of a FLUID DISTRIBUTION DEVICE as shown in the accompanying representations.

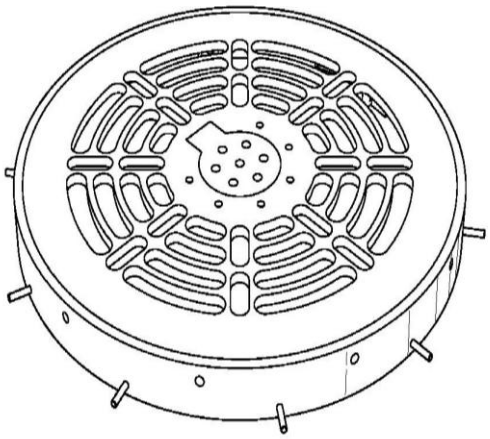

TOP PERSPECTIVE VIEW

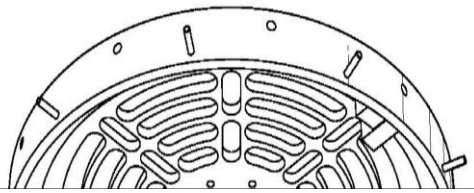

21: F2025/00842 22: 2025-07-16 23:
43: 2026-09-04
52: Class 25 24: Part F
71: COCHRANE GULF FZE
54: FENCE PANEL
57: The features for which protection is claimed reside in the shape and/or configuration of a fence panel comprising chain link fencing (A) reinforced with spaced apart elongate members (B) as shown in the accompanying drawings. In use the members (B) can extend vertically, horizontally or diagonally. The spacing (D) between the members is variable. Support structure, for the fence panel, does not form part of the design and is therefore not shown.

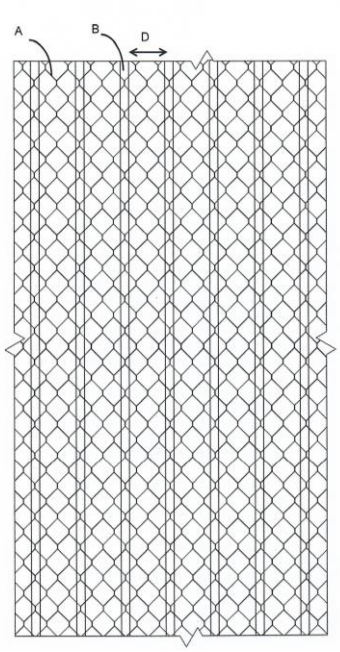

21: F2025/00843 22: 2025-07-16 23:
43: 2026-09-04
52: Class 25 24: Part F
71: COCHRANE GULF FZE
54: FENCE PANEL
57: The features for which protection is claimed reside in the shape and/or configuration of a fence panel comprising chain link fencing (A) reinforced with a welded mesh structure (B) which forms elongate columns (C), as shown in the accompanying drawings. In use the columns (C) can extend vertically, horizontally or diagonally. The spacing (D) between the columns is variable. Support structure, for the fence panel, does not form part of the design and is therefore not shown.

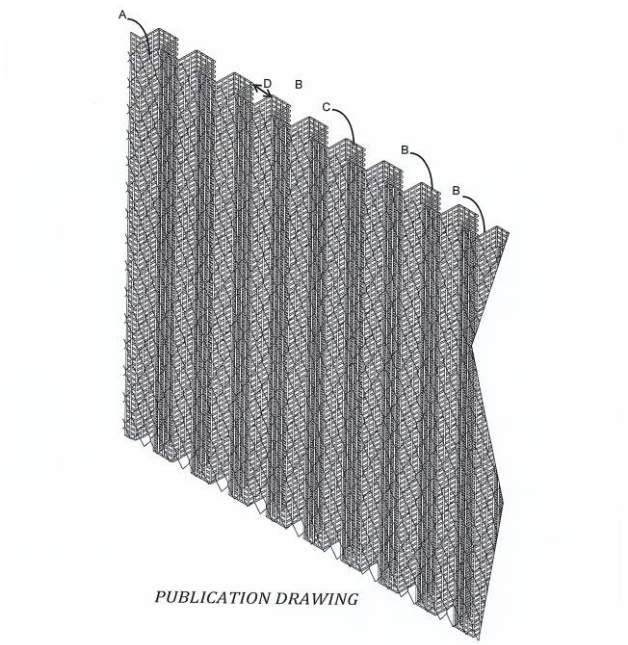

PUBLICATION DRAWING

21: F2025/01122 22: 2025-09-10 23:
43: 2026-09-21
52: Class 03 24: Part F
71: Mark Michael Cain
54: HANDHELD-DRILL HOLSTER
57: The design relates to a holster for handheld drills. The design incorporates an open structural arrangement which allows ventilation and prevents undue heat retention. The holster provides user protection from exposed drill bits while maintaining versatility for both left- and right-handed users without loss of function. The holster employs a unique ergonomic entry-and-twist motion which secures the drill safely while allowing ease of access. Upper and lower support portions prevent tilting or accidental slippage of the drill from the housing. The overall configuration allows ergonomic fitting of the holster to a toolbelt for secure, convenient carriage.

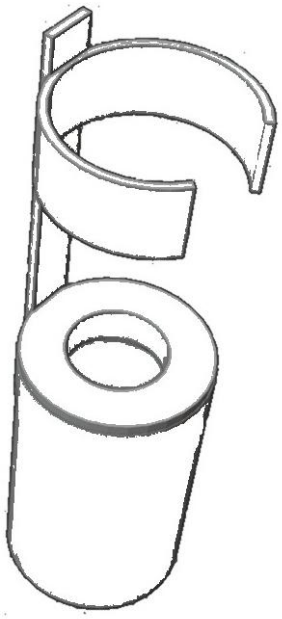

21: F2025/01218 22: 2025-10-09 23:
43: 2026-09-14
52: Class 14 24: Part F
71: SOLULAR (PTY) LTD
54: SOLAR CELL PHONE CASE
57: The novelty of the design resides in the shape or configuration of a cell phone case, substantially as shown in the accompanying drawings. The portions depicted in broken lines, the shape and configuration of the ports, the display, and the solar panels are exemplary only and do not form part of the design.



21: F2025/01431 22: 2025-11-26 23:
43: 2026-09-04
52: Class 12 24: Part F
71: TIY MANUFACTURING (PTY) LTD
54: DEBULKING TRAILERS
57: The features of the design for which protection is claimed include the pattern and/or shape and/or

configuration of a debulking trailer, substantially as shown in the representations.

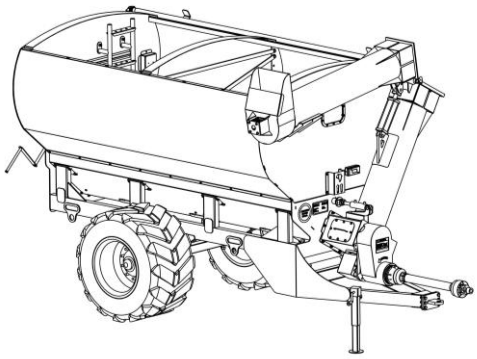

Three-dimensional side view of a debulking trailer

21: F2026/00116 22: 2026-02-10 23:
43: 2026-09-04
52: Class 29 24: Part F
71: CRONJE, Michael, Josias
54: ELECTRICAL CABLE RETENTION DEVICE
57: The design is applied to an electrical plug and cable retention device. The features of the design for which protection is claimed include the shape, pattern and/or configuration of an electrical plug and cable retention device as shown in the drawings, showing the general appearance thereof.

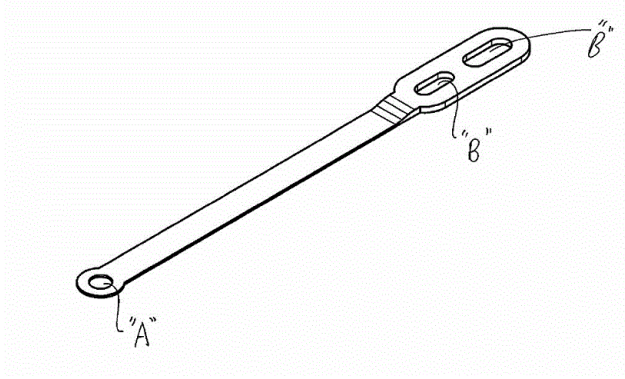

21: F2026/00130 22: 2026-02-12 23:
43: 2026-09-04
52: Class 21 24: Part F
71: GAVRIC, Slobodan
54: FISHING TOOL
57: The design relates to a fishing tool. The features of the design are those of shape and/or configuration. Protection is not claimed for the fishing tool accessories shown in Figures 7 to 10.

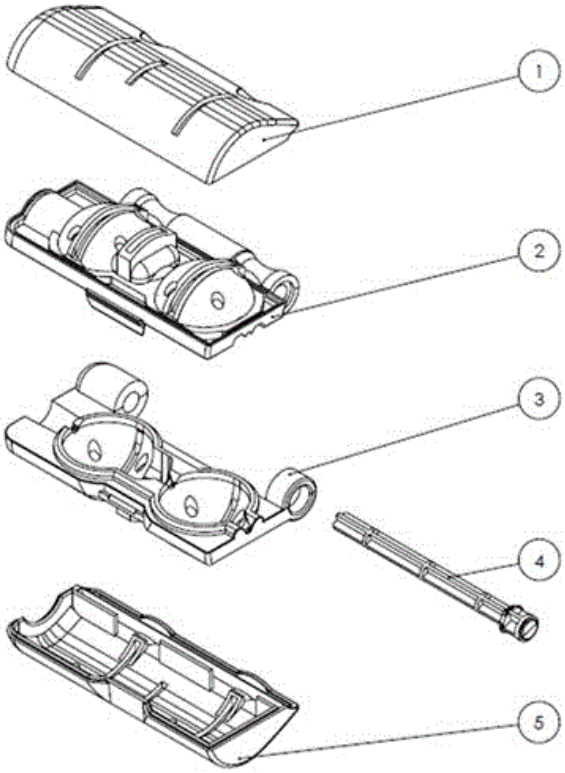

21: F2026/00158 22: 2026-02-18 23:
43: 2026-02-18
52: Class 25 24: Part F
71: PRINSLOO, Wessel Frans, TOPFLOOR CONCRETE PROPRIETARY LIMITED
54: Construction members
57: The design relates to a construction member substantially as shown in the accompanying representations. The construction member includes a pair of spaced elongate support posts and a walling web extending between the support posts. The walling web is relatively thinner in cross-section compared to the support posts. The aspects of the design shown in dashed broken lines are optional and do not form an essential part of the design.

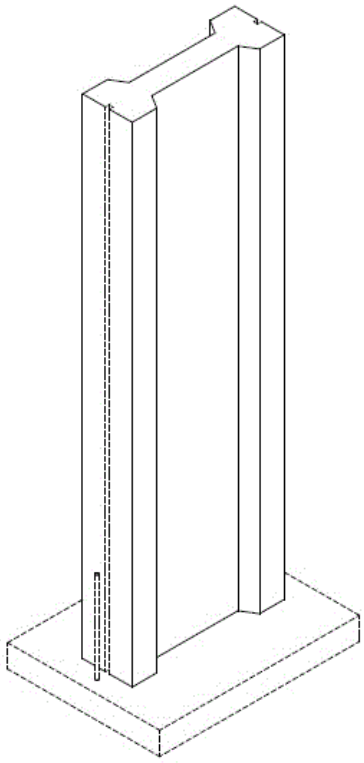

Three-dimensional view

21: F2026/00160 22: 2026-02-18 23:
43: 2026-09-14
52: Class 15 24: Part F
71: BEAUCHAMP, Siobhan
54: FLOW CONDITIONER
57: The features for which protection is claimed reside in the shape and/or configuration of a flow conditioner substantially as shown in the accompanying drawings.

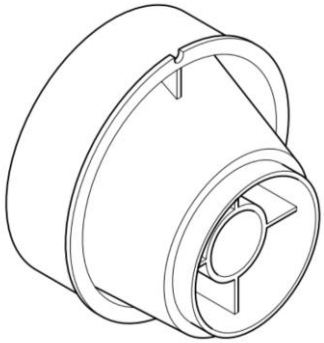

21: F2026/00165 22: 2026-02-20 23:
43: 2026-02-20
52: Class 15 24: Part F
71: RHODES UNIVERSITY
54: BIOPRINTING BODY MODULE
57: The design is applied to a bioprinting body module that is part of a bioprinting arrangement comprising at least one plunger-based extrusion arrangement accommodated within the bioprinting body module. The features of the design for which protection is claimed include the shape and/or configuration of a bioprinting body module, substantially as illustrated in the accompanying representations.

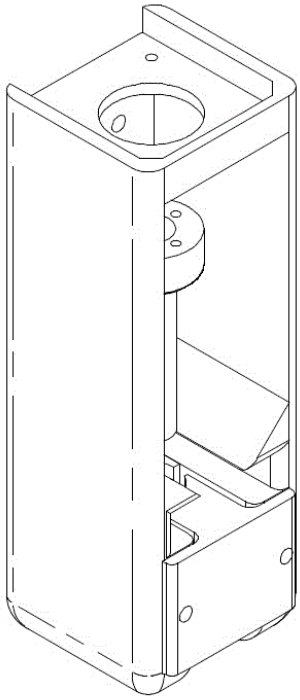

Three-dimensional view

21: F2026/00168 22: 2026-02-20 23:
43: 2026-02-20
52: Class 15 24: Part F
71: RHODES UNIVERSITY
54: BIOPRINTING BODY MODULE
57: The design is applied to a bioprinting body module that is part of a bioprinting arrangement comprising at least one plunger-based extrusion arrangement accommodated within the bioprinting body module. The features of the design for which protection is claimed include the shape and/or configuration of a bioprinting body module, substantially as illustrated in the accompanying representations.

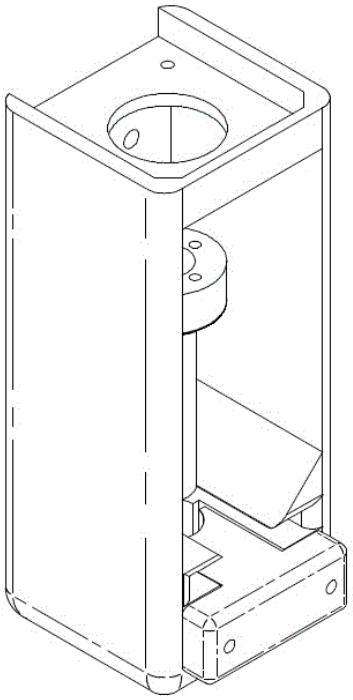

Three-dimensional view

21: F2026/00214 22: 2026-02-27 23:
43: 2026-09-04
52: Class 12 24: Part F
71: RSI NORTH AMERICA, INC.
33: US 31: 30/020,471 32: 2025-08-28
54: SADDLEBAG DRAWER
57: The features of the design for which protection is claimed reside in the shape and/or configuration and/or pattern of a saddlebag drawer, substantially as illustrated in Figures 1 to 8 of the accompanying representations. It being a definitive feature of the drawer that it is designed to hang from the canopy bin. Features shown in broken lines in the representations do not form part of the design and are disclaimed.

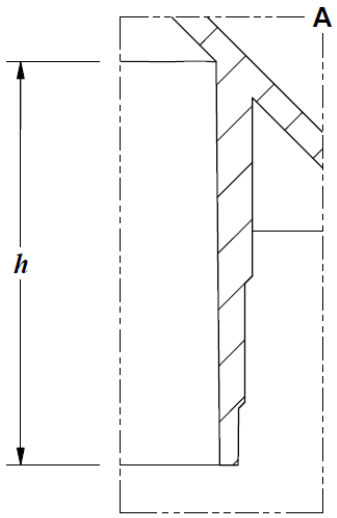

21: F2026/00226 22: 2026-03-04 23:
43: 2026-10-05
52: Class 25 24: Part F
71: Werner POTGIETER
54: FENCE CAP
57: The features of the design for which protection is claimed reside in the shape and/or configuration of retaining formations provided on a fence cap insert, substantially as shown in solid lines in the accompanying representations.

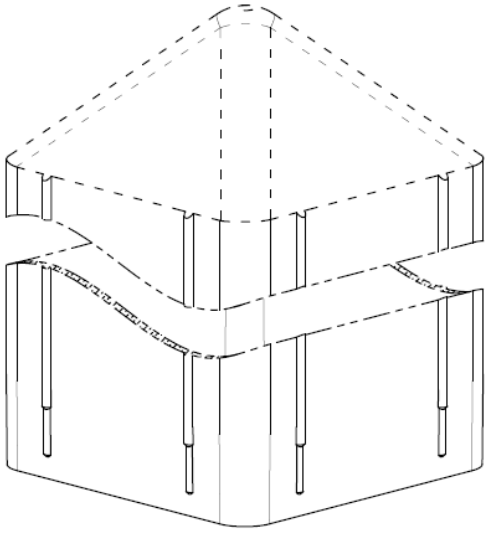

21: F2026/00251 22: 2026-03-13 23:
43: 2026-11-03
52: Class 02 24: Part F
71: ZAWADI SPORTS GROUP (PTY) LTD
54: SPORTS CAP

57: Statement of Features The design (cap) relates to headwear, specifically a baseball-style sports cap intended for active outdoor use. The cap comprises a crown formed from multiple fabric panels joined together to form a rounded head covering, a forward-projecting brim, and a rear adjustment strap. A concealed loop or tunnel structure is positioned on the inner side panel of the cap. The loop is constructed from soft fabric material such as fleece or a similar compressible textile. The loop forms a narrow front opening and a restricted retention section toward the rear, allowing the arm of a pair of sunglasses or similar eyewear to be inserted through the opening and retained within the loop. The loop is stitched to the interior surface of the cap panel, forming a fabric tunnel structure that compresses or grips the eyewear arm. The cap may further include: a front head panel suitable for branding or logo placement; a structured brim incorporating an internal stabilising insert; side panels formed from breathable fabric or mesh; an internal sweatband around the inner circumference; and a rear opening with an adjustable fastening strap, such as Velcro. The dimensions correspond generally to standard baseball cap proportions, although exact measurements may vary depending on manufacturing requirements. Key Features The key features of the design include: a concealed internal loop or tunnel structure positioned on the inner side panel of the cap; the configuration of the loop forming an entry opening and narrower retention section; the fabric tunnel construction stitched to the inner panel of the cap; the functional arrangement allowing the arm of sunglasses or eyewear to be inserted and retained within the loop while the cap is worn; and the internal positioning of the loop, allowing the eyewear to be held securely without altering the external appearance of the cap.

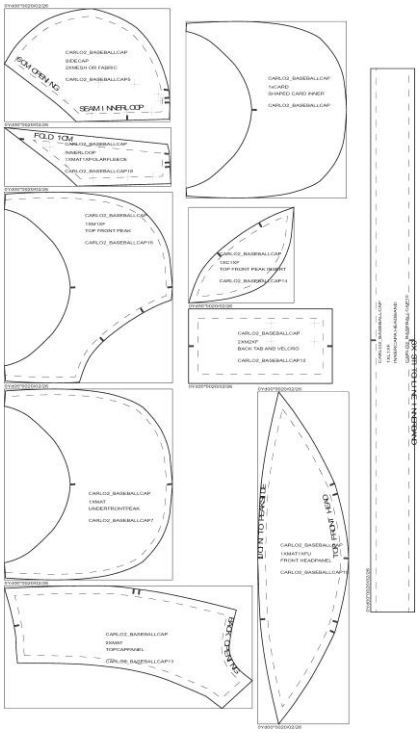

21: F2026/00256 22: 2026-03-17 23:
43: 2026-10-05
52: Class 15 24: Part F
71: THASASA (PTY) LTD

54: PORTABLE STONE DUSTER MACHINE

57: The features of the design for which protection is claimed reside in the shape and/or configuration of a portable stone duster machine, substantially as shown in the accompanying drawings.

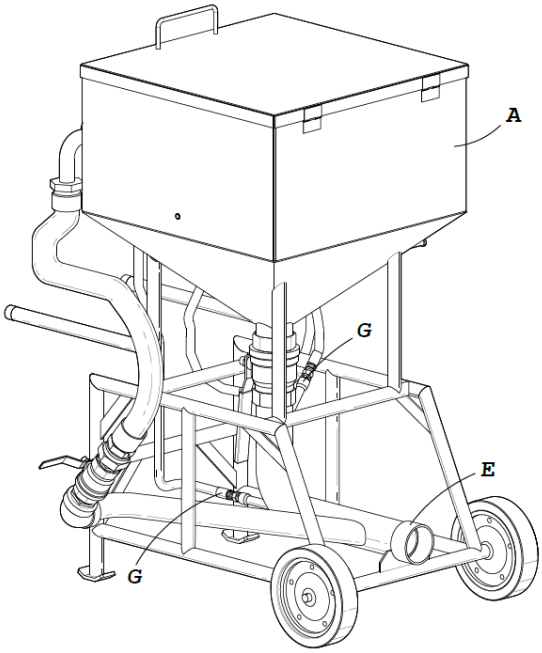

21: F2026/00328 22: 2026-03-24 23:
43: 2026-10-05
52: Class 25 24: Part F
71: COCHRANE GULF FZE
54: AERIAL BARRIER
57: The novelty of the design resides in the shape and/or configuration of an aerial barrier which includes elongate posts (P) which support a matrix (M) of flexible members to which mesh sheet material (S) is attached, substantially as shown in the accompanying representations.

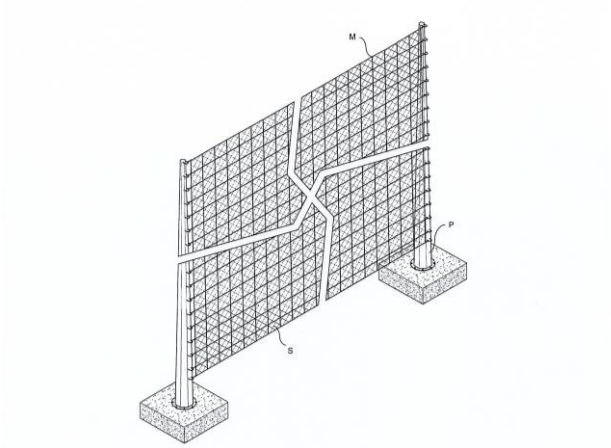

21: F2026/00344 22: 2026-03-31 23:
43: 2026-10-06
52: Class 24 24: Part F
71: CENTRE HOSPITALIER UNIVERSITAIRE VAUDOIS (C.H.U.V.)
54: DENTAL APPLIANCE
57: The design is applied to a dental appliance. The features of the design for which protection is claimed are those of the shape and/or configuration and/or pattern of the dental appliance. Features shown in broken lines do not form part of the design and are disclaimed. Separations depicted by break lines indicate an indeterminate length and any portions between the break lines do not form part of the design and are disclaimed.

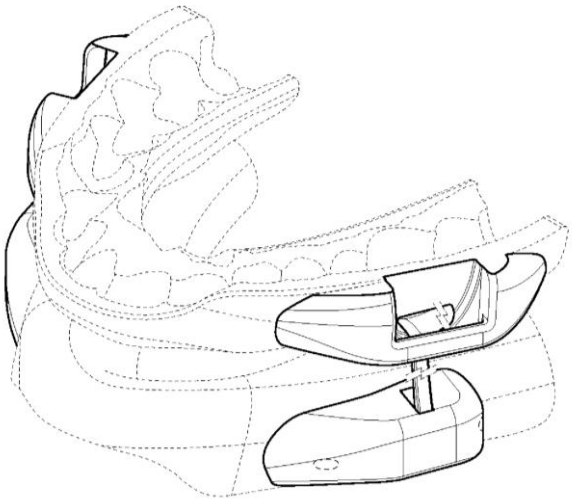

21: F2026/00408 22: 2026-04-14 23:
43: 2026-11-03
52: Class 19 24: Part F
71: VITAL LINK SA (PTY) LTD
54: QR CODE FOR ATTACHMENT TO PERSONAL ITEMS FOR IDENTIFYING A USER
57: The novelty of the design as applied to: QR CODE LABEL FOR ATTACHMENT TO PERSONAL ITEMS FOR IDENTIFYING A USER resides in the features of shape and/or configuration and/or pattern as applied to the article as shown in the representations.



21: F2026/00433 22: 2026-04-21 23:
43: 2026-11-16
52: Class 13 24: Part F
71: Synergistec Pty Ltd
54: SOLAR MOUNTING MINI RAIL FOR IBR ROOF SHEETING

57: The features of the design for which protection is claimed reside in the shape and configuration of a mini rail for solar panel mounting on profiled metal roof sheeting, comprising a U-shaped cross-sectional profile formed by two opposed upright side walls rising from a common base, with inwardly-directed upper lips partially enclosing the upper channel opening to retain the head of a clamp bolt, central through-base fastening of the rail to the roof sheeting by stitching screws passing along the centreline of the channel, laterally-extending load-distributing base flanges projecting outwardly from the lower edges of the side walls to spread the clamping load across a widened bearing footprint, characterised by a plurality of internal inclined or triangulated reinforcing ribs extending between each side wall and the base of the channel providing rigidity for unsupported rib-spanning installation, and longitudinal underside grooves retaining a resilient sealing strip running the full length of the rail, in any length and in any height within the range of 40 mm to 110 mm, installable longitudinally along a single rib or transversely spanning across two or more ribs of the roof sheeting.



21: F2026/00440 22: 2026-03-16 23:
43: 2026-11-03
52: Class 18 24: Part F
71: PERFIDIA TRADING AND PROJECTS
54: CELL PHONE POUCH
57: Overall the cellphone neck pocket pouche' is made of these operations and standards. These features can be operated in all sizes small,medium and all large sizes including kids sizes.The pouche• size length is 56cm xllcm(width) however it has no boundary line.Outside boarder-line is lcm/l.l/2cm depending on the fabric. The pouche• length is 18cm x Ilcm in width. The v•neck size is 5.5m in width. The safety at the back is 2cm x4cm, a quick release buckle stiched on with double operations on both ends of the pouche' safety releasing on the neck. Key features - Customization. Functionality and design has two pockets small on the back and big with harbours the cellphone at the front.



21: F2026/00448 22: 2026-04-24 23:
43: 2026-11-03
52: Class 12 24: Part F
71: DOMETIC VEHICLE OUTFITTERS SA (PTY) LTD
33: US 31: 30/030,820 32: 2025-10-31
54: VEHICLE RACK
57: The design is to be applied to a vehicle rack. The features for which protection is claimed are those of shape and/or pattern and/or configuration, substantially as shown in the representations.



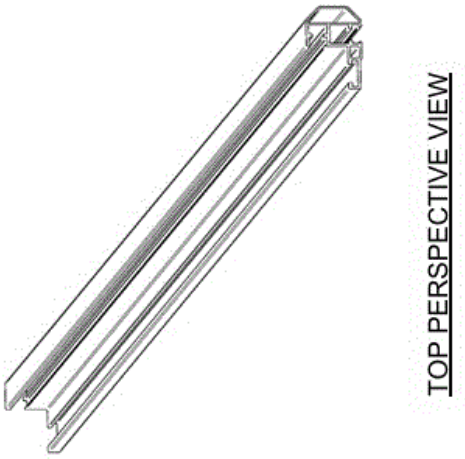

21: F2026/00450 22: 2026-04-24 23:
43: 2026-11-03
52: Class 12 24: Part F
71: DOMETIC VEHICLE OUTFITTERS SA (PTY) LTD
33: US 31: 30/030,820 32: 2025-10-31
54: COMPONENT OF A VEHICLE RACK
57: The design is to be applied to a component of a vehicle rack. The features for which protection is claimed are those of shape and/or pattern and/or configuration, substantially as shown in the representations.

HYPOTHECATIONS

No records available

JUDGMENTS

No records available

OFFICE PRACTICE NOTICES

No records available

4. COPYRIGHT

COPYRIGHT IN CINEMATOGRAPH FILMS

NOTICES OF ACCEPTANCE

(Applications filed in terms of Act No. 62 of 1977)

Any person, who has grounds for objection to the registration of the copyright in any of the following cinematographs films, may within the prescribed time, lodge Notice of Opposition on Form RF 5 contained in the Second Schedule to the Registration of Copyright in Cinematograph Films Regulations, 1980. The prescribed time is one month after the date of advertisement .This period may on application be extended by the Registrar.

The numerical denote the following: **(21)** Official application number. **(22)** Date of application. **(43)** Date of acceptance. **(24)** Date(s) and place(s) at which cinematograph films was made. **(25)** Date and place of first publication. **(71)** Name (s) of all applicant (s). **(75)** Name of author. **(76)** Name of producer **(77)** Name of director **(54)** Title of cinematograph film. **(78)** Name(s) of principal players or narrator. **(26)** Places at which cinematograph film may be viewed and conditions. **(55)** Specimen lodged/Not lodged. **(56)** Preview requested/Not requested. **(57)** Abstract (Storyline). **(58)** Category.

No records available

HYPOTHECATIONS

No records available

JUDGMENTS

No records available

OFFICE PRACTICE NOTICES

No records available

5. CORRECTION NOTICES

TRADE MARKS CORRECTION NOTICES

No records available

PATENTS CORRECTION NOTICES

The patent application number: **2025/06426** was advertised in the October 2026 with an omitted digit number **4** instead of **14**. It should have appeared as the one below however the publication date will remain the **28 October 2026.**

21: **2025/06426**. 22: 2025/07/30. 43: 2026/08/07
51: C10B
71: JFE STEEL CORPORATION
72: FUKUSHIMA, YASUMASA
54: METHOD FOR PREDICTING LIFE OF COKE OVEN BATTERY
00: -
An object is to provide a coke oven battery life predicting method that can predict the life of a coke oven battery. A coke oven battery life predicting method for predicting a life of a coke oven battery includes measuring an oven wall shape of each carbonization chamber 14 constituting a coke oven battery with a shape measuring device to identify a bulge 34 bulging inward from an initial position based on hot-state dimensions upon completion of construction of the coke oven, measuring the oven wall shape for the bulge 34 multiple times at different measurement dates and times to determine a regression equation representing a correspondence between time and the amount of bulging, calculating a date and time at which the amount of bulging calculated using the regression equation reaches a predetermined threshold to predict a usable period of the carbonization chamber 14, and predicting a life of the coke oven battery on the basis of the predicted usable period of the carbonization chamber **14**.

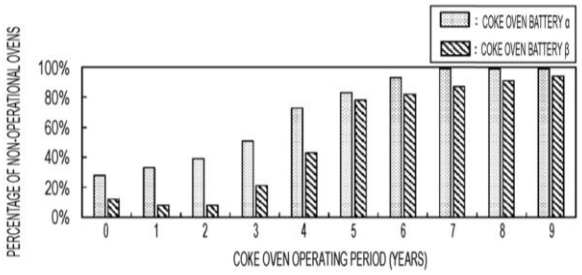

DESIGNS CORRECTION NOTICES

The design application number: **A2026/00117** was advertised in the October 2026 journal without the applicant's name and the applicant's name should read as **BEIJING HYPERSTRONG TECHNOLOGY CO., LTD.** Therefore, it should have appeared as the one below in the journal however the publication date will remain the **28 October 2026.**

21: A2026/00117 22: 2026-02-10 23:
43: 2026-09-04
52: Class 13 24: Part A
71: **BEIJING HYPERSTRONG TECHNOLOGY CO., LTD.**
33: CN 31: 202530720744X 32: 2025-12-05
54: ENERGY STORAGE CONTAINERS
57: The design is applied to an energy storage container. The features of the design for which protection is claimed are those of the shape and/or configuration and/or pattern and/or ornamentation of the energy storage container.

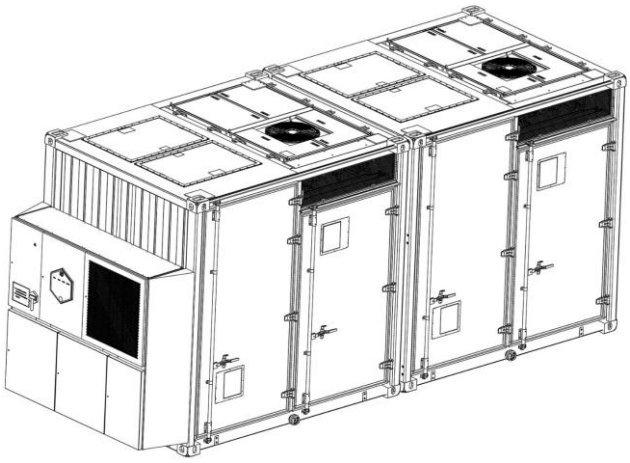

COPYRIGHT CORRECTION NOTICES

No records available

PATENTS

Advertisement List for November 2026

Number of Advertised Patents: 803

Application Number	Patent Title	Filing Date
2011/08185	CUTTING ELEMENTS, METHODS FOR MANUFACTURING SUCH CUTTING ELEMENTS, AND TOOLS INCORPORATING SUCH CUTTING ELEMENTS	2011/11/08
2016/03828	CHECK VALVE	2016/06/06
2016/07126	BANK NOTE PROTECTION	2016/10/17
2016/07387	PROCESS CONTROL SYSTEMS AND METHODS FOR USE WITH FILTERS AND FILTRATION PROCESSES	2016/10/26
2017/03820	UNBACKED AND MODIFIABLE TAPES AND SKIN DRESSINGS	2017/06/02
2017/04319	COMBINATION TUMOR IMMUNOTHERAPY	2017/06/26
2017/07614	SYSTEMS AND METHODS FOR DISTRIBUTING ROUGH DIAMONDS	2017/11/10
2018/02437	COMMUNICATION SYSTEM, BASE STATION, COMMUNICATION METHOD, AND NON-TRANSITORY COMPUTER READABLE MEDIUM STORING PROGRAM	2018/04/13
2018/03632	C-TERMINAL LYSINE CONJUGATED IMMUNOGLOBULINS	2018/05/31
2018/03650	MECHANICAL LOCKING OF CUTTING ELEMENT WITH CARBIDE MATRIX	2018/05/31
2018/04207	FORMULATIONS OF PHOSPHORAMIDATE DERIVATIVES OF NUCLEOSIDE DRUGS	2018/06/22
2018/04392	MOBILITY MANAGEMENT METHOD, TERMINAL, AND BASE STATION	2018/06/29
2018/05028	TROLLEY WITH HEIGHT ADJUSTABLE SHELVES	2018/07/26
2018/07658	WATER-SOLUBLE UNIT DOSE ARTICLES MADE FROM A COMBINATION OF DIFFERENT FILMS AND CONTAINING HOUSEHOLD CARE COMPOSITIONS	2018/11/14
2019/05472	HYDROXYSTEROID 17-BETA DEHYDROGENASE 13 (HSD17B13) VARIANTS AND USES THEREOF	2019/08/19
2019/05524	TREATMENT AND INHIBITION OF INFLAMMATORY LUNG DISEASES IN	2019/08/21

Application Number	Patent Title	Filing Date
	PATIENTS HAVING RISK ALLELES IN THE GENES ENCODING IL33 AND IL1RL1	
2019/07261	GARP-TGF-ß ANTIBODIES	2019/10/31
2020/00061	ANTI-CD8 ANTIBODIES AND USES THEREOF	2020/01/06
2020/00957	TREATMENT OF ABNORMAL BONE CONDITIONS IN ACID SPHINGOMYELINASE DEFICIENCY PATIENTS	2020/02/14
2020/01871	ANTI-TRKB MONOCLONAL ANTIBODIES AND METHODS OF USE	2020/03/24
2020/02038	PRODUCT USE AND BEHAVIOR MONITORING INSTRUMENT	2020/05/04
2020/02622	A NEGATIVE-RESISTANCE CIRCUIT AND ACTIVE FILTER FOR MILLIMETRE WAVE FREQUENCIES	2020/05/11
2020/03865	DIARYL SUBSTITUTED 6,5-FUSED RING COMPOUNDS AS C5AR INHIBITORS	2020/06/25
2020/04944	B7-H4 ANTIBODY FORMULATIONS	2020/08/11
2020/05323	METHOD OF PRODUCING NATURAL KILLER CELLS AND COMPOSITION FOR TREATING CANCER	2020/08/26
2020/05697	TRANSIENT CELLULAR REPROGRAMMING FOR REVERSAL OF CELL AGING	2020/09/14
2020/05826	NOVEL GLP-1 ANALOGUES	2020/09/21
2021/00430	IL-17A BINDING PEPTIDES AND MEDICAL USES THEREOF	2021/01/20
2021/01394	TRANSFORMATIONS FOR SIGNAL ENHANCEMENT CODING	2021/03/01
2021/03098	COMBINATION THERAPY INCLUDING A KRAS INHIBITOR AND ONE OR MORE ADDITIONAL PHARMACEUTICALLY ACTIVE AGENTS FOR THE TREATMENT OF CANCERS	2021/05/07
2021/03373	MAGNETOHYDRODYNAMIC HYDROGEN ELECTRICAL POWER GENERATOR	2021/05/19
2021/03641	NEW CRYSTALLINE FORMS OF A MCL-1 INHIBITOR, A PROCESS FOR THEIR PREPARATION AND PHARMACEUTICAL COMPOSITIONS CONTAINING THEM.	2021/05/27
2021/03729	METHODS OF GENETICALLY ALTERING A PLANT NIN-GENE TO BE RESPONSIVE TO CYTOKININ	2021/05/31
2021/03847	METHOD AND SYSTEM FOR PROVIDING A TAMPER PROOF RECORD CHAIN	2021/06/04

Application Number	Patent Title	Filing Date
2021/04165	METHODS AND SYSTEMS FOR DIAGNOSING FROM WHOLE GENOME SEQUENCING DATA	2021/06/17
2021/04659	RIFAMYCIN ANALOGS AND ANTIBODY-DRUG CONJUGATES THEREOF	2021/07/05
2021/05482	COMBINED SMELTING OF MOLTEN SLAGS AND RESIDUALS FROM STAINLESS STEEL AND FERROCHROMIUM WORKS	2021/08/02
2021/05587	REPAIRING AN OUTER SURFACE OF A GLASS PRODUCT	2021/08/06
2021/05891	WATER MANAGEMENT SYSTEM FOR ORE MINING OPERATION	2021/08/17
2021/06350	JOINT CODING OF PALETTE MODE USAGE INDICATION	2021/08/31
2021/06563	AAV MUTANT HAVING BRAIN-TARGETING PROPERTY	2021/09/07
2021/06715	MODULE FOR COLLECTING DATA RELATING TO A DEVICE OF A PASSENGER TRANSPORT VEHICLE	2021/09/10
2021/07417	BISPECIFIC ANTIBODY	2021/10/01
2021/09129	MODULATORS OF THR-ß AND METHODS OF USE THEREOF	2021/11/16
2021/09715	OPTIMIZED USER EQUIPMENT CAPABILITIES SIGNALING INCLUDING RECOVERY FROM DATABASE FAILURE	2021/11/29
2021/10094	ACTIVATING ANTI-GAL9 BINDING MOLECULES	2021/12/07
2022/00791	SOLS, MULTIFUNCTIONAL APPLICATIONS OF SOLS, AND ASSOCIATED PRODUCTS	2022/01/17
2022/03573	COMMUNICATION METHOD AND COMMUNICATIONS APPARATUS	2022/03/28
2022/04088	COMPOSITE BASED ON CUBIC BORON NITRIDE AND METHOD OF MAKING THEREOF	2022/04/11
2022/04259	COCOA AND/OR MALT BEVERAGE PRODUCTS	2022/04/14
2022/04271	PERFUME DELIVERY SYSTEM	2022/04/14
2022/04382	SINGLE-DOMAIN ANTIBODIES DIRECTED AGAINST LILRB2	2022/04/19
2022/04445	SUBSTITUTED 4-AMINOISOINDOLINE-1,3-DIONE COMPOUNDS AND SECOND ACTIVE AGENTS FOR COMBINED USE	2022/04/20
2022/04749	COMPOSITE FORMED OF CUBIC BORON NITRIDE WITHOUT TI-BASED CERAMIC COMPOUND AND METHOD OF MAKING THEREOF	2022/04/28
2022/05233	BROKEN RAIL DETECTOR	2022/05/11
2022/05276	ABSORBENT ARTICLE WITH SOFT ACQUISITION COMPONENT	2022/05/12
2022/05448	TGF-BETA POLYPEPTIDES	2022/05/17

Application Number	Patent Title	Filing Date
2022/05650	METHOD AND APPARATUS FOR MANUALLY SELECTING A NETWORK	2022/05/23
2022/05943	DEGRADATION OF SURFACE PROTEINS USING BISPECIFIC BINDING AGENT	2022/05/27
2022/06118	SORTILIN BINDING CONJUGATE COMPOUNDS, COMPOSITIONS AND USES THEREOF FOR TREATING CANCER	2022/06/01
2022/06205	FUNGICIDAL COMBINATIONS	2022/06/03
2022/07683	GROUND CABLE WITH VISUAL INDICATOR	2022/07/11
2022/07797	METHOD FOR JOINING A FLUID CONDUIT AND A CONNECTION HUB	2022/07/13
2022/07921	APPARATUS FOR ANALYZING A PAYLOAD BEING TRANSPORTED IN A LOAD CARRYING CONTAINER OF A VEHICLE	2022/07/15
2022/08591	RECOVERY OF VANADIUM FROM ALKALINE SLAG MATERIALS	2022/08/01
2022/08946	SUBSTITUTED 5,6-DIPHENYL-3(2H)-PYRIDAZINONES FOR USE AS FUNGICIDES	2022/08/10
2022/09059	METHODS FOR PERFORMING DISCONTINUOUS RECEPTION ON SIDELINK	2022/08/12
2022/09078	SUNFLOWER PHOSPHOLIPID COMPOSITION CONTAINING PHOSPHATIDYLCHOLINE	2022/08/12
2022/09128	DEPLETION OF EXT1 EXPRESSION AND/OR ACTIVITY IMPROVES CELLULAR PRODUCTION OF BIOLOGICAL ENTITIES	2022/08/15
2022/09178	HETEROCYCLIC COMPOUNDS FOR MODULATING NR2F6	2022/08/16
2022/09185	ORAL PEPTIDE ADMINISTRATION	2022/08/16
2022/09244	METHOD FOR RECOVERING METAL ZINC FROM SOLID METALLURGICAL WASTES	2022/08/17
2022/09299	METHODS AND MATERIALS FOR ASSESSING NUCLEIC ACIDS	2022/08/18
2022/09443	ANTI-INTERLEUKIN-33 ANTIBODIES AND USES THEREOF	2022/08/23
2022/09522	NEW METHOD AND COMPOUND FOR PROSTATE CANCER DIAGNOSIS	2022/08/25
2022/09523	ADDRESSING SYSTEM FOR A WIRELESS COMMUNICATION NETWORK	2022/08/25
2022/09724	LIGHT STABILIZER MIXTURE	2022/08/31
2022/09725	POLYMORPHS OF ELAFIBRANOR	2022/08/31
2022/09749	CBP/CATENIN SIGNALING PATHWAY INHIBITORS AND USES THEREOF	2022/08/31

Application Number	Patent Title	Filing Date
2022/09967	IMPROVED PACKET TRANSFER	2022/09/07
2022/09971	STABLE FAT-SOLUBLE VITAMIN POWDERS	2022/09/07
2022/09973	DEVICE AND METHOD FOR HEATING A FLUID IN A PIPELINE WITH SINGLE-PHASE ALTERNATING CURRENT	2022/09/07
2022/11063	METHOD AND APPARATUS FOR DETERMINING COMBINE EFFICIENCY	2022/10/10
2022/12749	AN ASSEMBLY AND A SYSTEM SUITABLE FOR DISPENSING A LIQUID FROM A COMPRESSIBLE BAG	2022/11/23
2022/13683	IMPROVEMENT EMBEDDED IN AGRICULTURAL EQUIPMENT	2022/12/19
2023/01137	METHOD FOR PRODUCING POLYOXYMETHYLENE DIMETHYL ETHERS	2023/01/27
2023/01596	MODIFIED GLUTAMATE DEHYDROGENASE AND USE THEREOF	2023/02/08
2023/03239	SYSTEM, METHOD, AND COMPUTER PROGRAM PRODUCT FOR OPERATING A GROUP TRANSACTION NETWORK	2023/03/01
2023/03544	A STORAGE STABLE INSECTICIDAL COMPOSITION	2023/03/13
2023/04228	FUNGICIDAL COMBINATION	2023/04/06
2023/04554	WRIST BRACE	2023/04/19
2023/04609	STABLE HERBICIDAL COMPOSITIONS	2023/04/20
2023/04725	TEMPLATE MATCHING IN VIDEO CODING	2023/04/24
2023/04832	COMBINATIONS OF TRIAZINONE HERBICIDES WITH SAFENERS	2023/04/26
2023/05018	HETEROARYL AMIDE INHIBITORS OF CD38	2023/05/05
2023/05290	CARRIER AGGREGATION CONFIGURATION IN 5G WIRELESS NETWORKS	2023/05/15
2023/05341	FUNGICIDAL COMPOSITIONS	2023/05/16
2023/05371	APERIODIC SYSTEM INFORMATION BROADCAST	2023/05/17
2023/05375	ENHANCEMENTS FOR MEASUREMENT REPORTING IN NON-TERRESTRIAL NETWORKS	2023/05/17
2023/05764	HARDFACED ROTARY DRILL BIT	2023/05/29
2023/06042	LEACHING OF PRECIOUS AND CHALCOPHILE METALS	2023/06/07
2023/06147	LOW COMPLEXITY HISTORY USAGE FOR RICE PARAMETER DERIVATION FOR HIGH BIT-DEPTH VIDEO CODING	2023/06/09
2023/06740	ORIENTATION SYSTEM FOR DOWNHOLE DEVICE	2023/06/30
2023/06840	TREATMENT PLANNING FOR ALPHA PARTICLE RADIOTHERAPY	2023/07/05

Application Number	Patent Title	Filing Date
2023/07225	SYNERGISTIC EFFECT OF SMN1 AND MIR-23 A IN TREATING SPINAL MUSCULAR ATROPHY	2023/07/19
2023/07427	SYSTEMS AND APPARATUSES FOR SOIL AND SEED MONITORING	2023/07/26
2023/07428	SYSTEMS AND APPARATUSES FOR SOIL AND SEED MONITORING	2023/07/26
2023/07719	METHOD OF MAKING A SHAPED TOOL COMPONENT	2023/08/04
2023/07720	METHOD OF MAKING A SHAPED TOOL COMPONENT	2023/08/04
2023/07742	FUNGICIDAL NITROANILINO SUBSTITUTED PYRAZOLES	2023/08/07
2023/07743	A METHOD AND SYSTEM FOR WIRELESS MEASUREMENT OF DETONATION OF EXPLOSIVES	2023/08/07
2023/07954	METHOD FOR PREPARING AN ENANTIOMERICALLY ENRICHED FORM OF 3-(2-CHLOROTHIAZOL-5-YL)-8-METHYL-7-OXO-6-PHENYL-2,3-DIHYDROTHIAZOLO[3,2-A]PYRIMIDIN-4-IUM-5-OLATE	2023/08/16
2023/07955	METHOD FOR PREPARING AN ENANTIOMERICALLY ENRICHED FORM OF 3-(2-CHLOROTHIAZOL-5-YL)-8-METHYL-7-OXO-6-PHENYL-2,3-DIHYDROTHIAZOLO[3,2-A]PYRIMIDIN-4-IUM-5-OLATE	2023/08/16
2023/08143	FILTER UNIT LIFTING SYSTEM	2023/08/23
2023/08155	A CRUSHING EQUIPMENT AND A METHOD FOR CONTROLLING THE SAME	2023/08/23
2023/08266	ANTIBODIES THAT BIND CD123 AND GAMMA-DELTA T CELL RECEPTORS	2023/08/28
2023/08367	COMPOSITIONS AND ARTICLES INCLUDING PERFLUOROPOLYETHER BOTTLEBRUSH POLYMERS AND METHODS OF MAKING AND USING SAME	2023/08/30
2023/10238	EXTENDED, HIGH DOSE VEGF ANTAGONIST REGIMENS FOR TREATMENT OF ANGIOGENIC EYE DISORDERS	2023/11/02
2024/00102	INDUCTOR	2024/01/02
2024/02158	ISOLATED MODIFIED AAV5 CAPSID PROTEIN VP1	2024/03/18
2024/02655	PROCESS FOR AN INSTANT NON-FRIED NOODLE	2024/04/05
2024/03204	GRIPPER, ROCK DRILLING UNIT AND METHOD	2024/04/25

Application Number	Patent Title	Filing Date
2024/03329	METHOD OF PREPARING BIODEGRADABLE MICROCAPSULES BASED ON GELATINE	2024/04/29
2024/03375	AGRICULTURAL METHODS AND USES FOR THE MODULATION OF REDOX POTENTIAL IN SOIL AND/OR PLANT TISSUE	2024/04/30
2024/03932	METHOD AND DEVICE FOR PROVIDING BEVERAGE MANUFACTURING ANALYSIS	2024/05/21
2024/04021	LOG SUPPORT	2024/05/23
2024/04034	METHOD FOR MANUFACTURING EXHAUST GAS PURIFICATION CATALYST DEVICE	2024/05/23
2024/04309	INHIBITORS OF MENIN-MLL INTERACTION	2024/05/31
2024/04892	CATALYST COMPOSITION FOR OLIGOMERIZATION REACTION	2024/06/21
2024/05019	APPARATUS TO GUIDE ANIMALS AND METHOD THEREFOR	2024/06/26
2024/05094	METHOD AND DEVICE FOR DETERMINING WHETHER AN OILSEED, A NUT, IN PARTICULAR A HAZELNUT, OR A SEED IS RANCID	2024/06/28
2024/05274	GASIFIER HAVING LIQUID LEVEL SELF-BALANCING FUNCTION	2024/07/05
2024/05331	SPIROCYCLIC PIPERIDINYL DERIVATIVES AS COMPLEMENT FACTOR B INHIBITORS AND USES THEREOF	2024/07/09
2024/05573	YEAST-BASED NUTRIENT AND USES THEREOF	2024/07/17
2024/05645	METHODS OF TREATMENT WITH CAR CELLS IN COMBINATION WITH S1P RECEPTOR MODULATORS	2024/07/19
2024/05849	ORAL CARE COMPOSITION COMPRISING POROUS SILICA PARTICLES	2024/07/29
2024/05997	A METHOD OF FORMING A SYNGAS FOR PRODUCING LIQUID HYDROCARBONS	2024/08/02
2024/06159	SOLAR ENERGY COLLECTOR	2024/08/12
2024/06285	ANAPLASMA VACCINES AND METHODS OF USE THEREOF	2024/08/15
2024/06301	CHILD RESISTANT ZIPPER CLOSURE, SLIDER, RECLOSEABLE POUCH & METHODS	2024/08/16
2024/06331	SINGLE-CAPACITOR ELECTRONIC DETONATOR AND SYSTEM FOR FIRING SUCH SINGLE-CAPACITOR ELECTRONIC DETONATORS	2024/08/16

Application Number	Patent Title	Filing Date
2024/06333	TREATMENT OF SIGNS, SYMPTOMS AND/OR COMPLICATIONS OF VIRAL, BACTERIAL, PROTOZOAL, AND/OR FUNGAL INFECTIONS BY HIGH PENETRATION PRODRUGS	2024/08/16
2024/06334	PREVENTION OR TREATMENT OF CARDIOVASCULAR DISEASES OF HIGH PENETRATION PRODRUGS OF ASPIRIN AND OTHER NSAIDS	2024/08/16
2024/06587	FIXED BED GASIFIER	2024/08/27
2024/06588	LANCES FOR INJECTING REACTANTS INTO GASIFIERS	2024/08/27
2024/06589	SYNGAS CLEANING AND SOOT RECOVERY	2024/08/27
2024/07698	VALVE	2024/10/10
2024/07755	CHARGE-BEARING CYCLODEXTRIN POLYMERIC MATERIALS AND METHODS OF MAKING AND USING SAME	2024/10/14
2024/08023	A CRUSHER FEED STATION	2024/10/23
2024/09737	FLOAT ARRANGEMENT AND AIR RELEASE VALVE INCORPORATING SAME	2024/12/17
2025/00275	DIGITAL MONITORING OF PATHOGEN LOAD IN LIVESTOCK	2025/01/08
2025/00678	A TUMOUR DETECTION APPARATUS	2025/01/21
2025/01501	ARC FAULT PROTECTION SYSTEM	2025/02/18
2025/01951	GLUCAGON-LIKE-PEPTIDE-2 (GLP-2) ANALOGUES AND THEIR MEDICAL USES FOR THE TREATMENT OF SHORT BOWEL SYNDROME (SBS)	2025/03/04
2025/02967	NUCLEIC ACID ACTIVE AGENTS AGAINST VARIOUS PLANT PATHOGENS	2025/04/08
2025/03111	NITROGEN-CONTAINING HETEROCYCLIC DERIVATIVE INHIBITOR, PREPARATION METHOD THEREFOR AND USE THEREOF	2025/04/11
2025/03161	ASSET IDENTIFICATION, REGISTRATION, TRACKING AND COMMERCIALIZATION APPARATUSES AND METHODS	2025/04/15
2025/03366	IONIZABLE LIPIDS AND LIPID NANOPARTICLES CONTAINING THEREOF	2025/04/22
2025/03412	GLYCOSYNTHASE VARIANTS FOR ANTIBODY-DRUG CONJUGATE ENGINEERING	2025/04/23
2025/03629	NOVEL REFERENCE STANDARD AND IMPROVED METHOD FOR QUANTIFICATION OF SACCHARIDE IN VACCINE	2025/04/29

Application Number	Patent Title	Filing Date
2025/03643	RNA INHIBITOR FOR INHIBITING LPA GENE EXPRESSION AND USE THEREOF	2025/04/29
2025/03645	ANIONIC AMINO ACID-BASED SURFACTANTS FOR THE BENEFICIATION OF MAGNETIC MINERALS FROM LOW-GRADE ORES	2025/04/29
2025/03862	SCIENCE POPULARIZATION MODEL DEVICE FOR DESERTIFICATION PREVENTION AND CONTROL	2025/05/07
2025/03871	AN APPARATUS, A METHOD AND A COMPUTER PROGRAM FOR VIDEO CODING AND DECODING	2025/05/07
2025/04081	POSITIONING	2025/05/14
2025/04214	ADDRESS GENERATION SYSTEM FOR A WIRELESS COMMUNICATION NETWORK	2025/05/16
2025/04341	ABSORBENT INCONTINENCE ARTICLE IN THE FORM OF BRIEFS	2025/05/21
2025/04575	EARLY INDICATION FOR DUAL CONNECTIVITY AND/OR CARRIER AGGREGATION	2025/05/28
2025/04712	SMALL DATA TRANSMISSION CONTROL	2025/06/02
2025/04722	RECOMBINANT RSV VACCINE: METHODS OF MAKING AND USING THE SAME	2025/06/02
2025/04783	BEAM INFORMATION TRIGGERING FOR CELL ACTIVATION	2025/06/04
2025/04785	POWER HEADROOM FOR SECONDARY CELL	2025/06/04
2025/04786	METHOD AND APPARATUS FOR INDICATING POSITIONING AVAILABILITY BASED ON NETWORK CONGESTION	2025/06/04
2025/04788	CONSISTENT LISTEN BEFORE TALK FAILURE RECOVERY PROCEDURE FOR SIDELINK OPERATION IN UNLICENSED BANDS	2025/06/04
2025/04818	COMBINING THE EXPRESSION LEVELS OF KRT19 AND COL1A2 TO PRODUCE A SCORE FOR SCREENING AND DIAGNOSING CANCER	2025/06/05
2025/04973	SPOT WEED DETECTION AND TREATMENT WITHIN A FIELD OF VIEW IN ACCORDANCE WITH MACHINE LEARNING TRAINING	2025/06/11
2025/05120	METHOD,APPARATUS,AND SYSTEM FOR TRANSFERING DATA	2025/06/13
2025/05267	SALT OF S-OXPRENOLOL	2025/06/20
2025/05771	A SPACE OPTIMIZED ULTRA VIOLET GERMICIDAL IRRADIATION SYSTEM	2025/07/07

Application Number	Patent Title	Filing Date
2025/06010	SYF2 ANTISENSE OLIGONUCLEOTIDES	2025/07/15
2025/06130	DIFFERENTIAL DIAGNOSING OF BIPOLAR VERSUS UNIPOLAR DISORDER IN PATIENT DURING DEPRESSION PHASES USING A TO I RNA EDITING ZNF267 GENE	2025/07/18
2025/06345	SYSTEMS, APPARATUS AND METHODS FOR INTER PREDICTION REFINEMENT WITH OPTICAL FLOW	2025/07/29
2025/06361	METHODS AND COMPOSITIONS FOR PRODUCTION AND PURIFICATION OF PEPTIDES	2025/07/29
2025/06431	THREE-RAIL POWER SUPPLY SYSTEM	2025/07/30
2025/06477	PROCESS FOR THE PREPARATION OF ISOXAZOLINE DERIVATIVES	2025/07/31
2025/06516	ENCODING METHOD, DECODING METHOD, CODE STREAM, ENCODER, DECODER, AND STORAGE MEDIUM	2025/08/01
2025/06520	DECODING METHOD, CODING METHOD, DECODERS, AND CODERS	2025/08/01
2025/06523	VIDEO DECODING METHOD, VIDEO ENCODING METHOD, DECODER, ENCODER AND COMPUTER-READABLE STORAGE MEDIUM	2025/08/01
2025/06579	CYCLOPROPANECARBOXYLIC ACID ESTER COMPOUND AND USE THEREOF	2025/08/05
2025/06580	CYCLOPROPANECARBOXYLIC ACID ESTER COMPOUND AND USE THEREOF	2025/08/05
2025/06581	REINFORCING COMPOSITE MATERIAL	2025/08/05
2025/06615	CLOSURE FOR A CONTAINER	2025/08/06
2025/06638	KETOHEXOKINASE (KHK) IRNA COMPOSITIONS AND METHODS OF USE THEREOF	2025/08/07
2025/06639	SUPEROXIDE DISMUTASE 1 (SOD1) IRNA COMPOSITIONS AND METHODS OF USE THEREOF FOR TREATING OR PREVENTING SUPEROXIDE DISMUTASE 1- (SOD1-) ASSOCIATED NEURODEGENERATIVE DISEASES	2025/08/07
2025/06650	APPARATUS FOR CONVEYING AND PACKAGING FRUIT AND VEGETABLE PRODUCTS	2025/08/07
2025/06652	SQUID LURE FOR FISHING	2025/08/07
2025/06665	MIST INHALER DEVICES	2025/08/08
2025/06708	FILTER SYSTEM HAVING KEY-FIT ATTACHMENT BETWEEN HOLDER AND FILTER CONNECTOR	2025/08/11
2025/06714	A COMPOSITION FOR REDUCING URINE MALODOUR	2025/08/11
2025/06715	CLOSURE	2025/08/11

Application Number	Patent Title	Filing Date
2025/06716	A COMPOSITION FOR CLEANING SURFACES AND CONTROLLING INSECTS	2025/08/11
2025/06717	A SOLID DISINFECTION COMPOSITION	2025/08/11
2025/06734	A NICOTINE DELIVERY DEVICE	2025/08/12
2025/06735	A HOOKAH DEVICE	2025/08/12
2025/06763	PROCESS FOR DEPOLYMERIZATION OF POLYALKYLENE TEREPHTHALATES IN AN EXTRUDER	2025/08/13
2025/06764	PROCESS FOR DEPOLYMERIZING POLYALKYLENE TEREPHTHALATES IN MIXTURES WITH LOWER-MELTING POLYOLEFINS	2025/08/13
2025/06765	PROCESS FOR DEPOLYMERIZATION OF POLYALKYLENE TEREPHTHALATES IN AN EXTRUDER	2025/08/13
2025/06769	A BIO-PRESERVATION STICKER, METHODS OF PRODUCING THE SAME AND USES THEREOF	2025/08/13
2025/06833	ANTI-CTLA4 ANTIBODIES AND METHODS OF MAKING AND USING THE SAME	2025/08/15
2025/06847	COMMUNICATION METHOD AND DEVICE AND STORAGE MEDIUM	2025/08/15
2025/06849	CAPTIVE BALLOON SUPPORT STRUCTURE ASSEMBLY	2025/08/15
2025/06854	PROCESS FOR PREPARING (15ALPHA,16ALPHA,17BETA)-ESTRA-1,3,5(10)-TRIENE-3,15,16,17-TETROL (ESTETROL) MONOHYDRATE	2025/08/15
2025/06874	MONITORING INTEGRITY OF CHARGING RAIL SYSTEM	2025/08/18
2025/06917	PHARMACEUTICAL COMPOSITION AND METHOD FOR ACTIVATING IMMUNITY AGAINST TUMOR	2025/08/19
2025/06918	SCALE INHIBITOR AND SCALE INHIBITING METHOD FOR REVERSE OSMOSIS MEMBRANE	2025/08/19
2025/06921	METHODS, DEVICES, AND SYSTEMS FOR CAPABILITY COORDINATION IN DUAL-CONNECTION	2025/08/19
2025/06957	COMBINATION THERAPY OF INTERLEUKIN-2 (IL-2) ANALOG OR CONJUGATE THEREOF AND IMMUNE CHECKPOINT INHIBITOR FOR PREVENTING OR TREATING CANCER	2025/08/20
2025/06958	COMPOSITION FOR TREATING DIABETIC RETINOPATHY, COMPRISING PEPTIDE	2025/08/20
2025/06960	PHARMACEUTICAL COMPOSITION COMPRISING INTERLEUKIN-2 (IL-2) ANALOG OR CONJUGATE THEREOF	2025/08/20

Application Number	Patent Title	Filing Date
	FOR PREVENTING OR TREATING CANCER	
2025/06963	HOT-ROLLED STEEL SHEET AND METHOD FOR PRODUCING SAME	2025/08/20
2025/06964	HOT-ROLLED STEEL SHEET AND METHOD FOR PRODUCING SAME	2025/08/20
2025/06966	OBJECT HANDLING SYSTEM, INDUSTRIAL FACILITY COMPRISING AN OBJECT HANDLING SYSTEM, METHOD FOR MAINTAINING AN OBJECT HANDLING SYSTEM AND METHOD FOR ASSEMBLING AN OBJECT HANDLING SYSTEM	2025/08/20
2025/06968	METHOD FOR THE GENERATION OF HYDROGEN	2025/08/20
2025/06969	CHANNEL INDUCTION FURNACE	2025/08/20
2025/07010	PURIFICATION OF ELECTROLYTIC HYDROGEN	2025/08/21
2025/07011	PURIFICATION OF ELECTROLYTIC OXYGEN	2025/08/21
2025/07012	PENCIL, SHAFT AND PROCESS FOR PRODUCTION THEREOF	2025/08/21
2025/07015	DOSAGE FORMS OF MIRDAMETINIB	2025/08/21
2025/07041	LITHIUM RECOVERY FROM SLAGS	2025/08/22
2025/07042	ONE-PIECE COMPOSITE GRINDING ROLLER	2025/08/22
2025/07072	ANTI-ACNE RECOMBINANT PROTEIN VACCINE, PREPARATION METHOD THEREFOR AND APPLICATION THEREOF	2025/08/25
2025/07124	URINATION DISORDER-ALLEVIATING AGENT	2025/08/26
2025/07130	A SOLID LAUNDRY COMPOSITION	2025/08/26
2025/07164	PROCESS FOR PREPARING GUANIDINOACETIC ACID COMPRISING GRANULATES	2025/08/27
2025/07168	PHARMACEUTICAL FORMULATION, PREPARATION METHOD THEREFOR, AND TABLET COMPOSITION	2025/08/27
2025/07169	INJECTABLE COMPOSITION, PHARMACEUTICAL FORMULATION INCLUDING THE SAME, AND METHOD FOR PREPARING THE COMPOSITION	2025/08/27
2025/07183	TEMPERED GLASS BOTTLE WITH SANDWICH STRUCTURE	2025/08/27
2025/07184	TEMPERED GLASS BOTTLE WITH THIN WALL THICKNESS	2025/08/27
2025/07242	PROCESS FOR PRODUCING A POLYMER LEADING EDGE PROTECTION SHEET WITH CHAMFERED SIDE EDGES	2025/08/28
2025/07243	BEVERAGE FOAMING APPARATUS	2025/08/28

Application Number	Patent Title	Filing Date
2025/07245	ACTIVE HYPERSPECTRAL MINERALOGY SENSING FOR MINING	2025/08/28
2025/07276	METHOD FOR CREATING GEOMETRIC FRESHWATER SANITARY AREAS WITHIN LARGE WATER BODIES	2025/08/29
2025/07277	METHOD FOR DETERMINING FEATURE CHARACTERISTICS OF A SURFACE	2025/08/29
2025/07279	SYSTEM, APPARATUS, COMPUTER PROGRAM PRODUCT, AND METHOD FOR DETERMINING TRACK PITCH DISTANCE MEASUREMENT	2025/08/29
2025/07402	PROCESS FOR PRODUCING FREE-FLOWING PARTICLES COMPRISING OR CONSISTING OF AN N-GUANYLAMINO ACID	2025/09/03
2025/07403	PROCESS FOR PREPARING AN N-GUANYLAMINO ACID	2025/09/03
2025/07888	A WASTE CONVERSION METHOD	2025/09/16
2025/07983	BIOMASS SILICON FERTILIZER AND PREPARATION METHOD AND APPLICATIONS THEREOF	2025/09/18
2025/08128	AN ANTITHEFT DEVICE FOR CAR WHEELS AND AN INSERT STRUCTURE THERETO	2025/09/23
2025/08394	HAND-HELD TWO-WAY RADIO DEVICE	2025/10/02
2025/08396	"ANTIBODY-LIKE MOLECULE COMPRISING HETERODIMER OF HUMAN CD1B (CLUSTER OF DIFFERENTIATION 1) PROTEIN"	2025/10/02
2025/08654	SOFTWARE QUALITY DETECTION METHODS, SYSTEMS, AND STORAGE MEDIA	2025/10/14
2025/08696	METHOD FOR DETERMINING AN AMOUNT OF BAINITIC FERRITE FORMED DURING A STEEL PROCESSING OPERATION, ASSOCIATED MONITORING OR CONTROL METHODS	2025/10/15
2025/08700	PRODUCTIVE COATING PROCESS FOR A STEEL SHEET, CORRESPONDING EQUIPMENT, A METALLIC COATED HOT ROLLED STEEL SHEET	2025/10/15
2025/08900	METHOD FOR DETERMINING A FLUX OF AERIAL PARTICULATES AND ASSOCIATE ELECTRONIC DEVICE	2025/10/22
2025/08933	VAPOUR NOZZLE FOR JVD	2025/10/23
2025/09229	TROUGH AND TROUGH CONVEYOR, CONFIGURED AND ADAPTED TO TRANSPORT FISH TRANSVERSELY TO THEIR LONGITUDINAL EXTENT	2025/10/31

Application Number	Patent Title	Filing Date
2025/09928	A SYSTEM FOR STORING AND TRANSFERRING HEAT, COMPRISING A SOLID BULK MATERIAL	2025/11/20
2025/10058	COMPUTER-IMPLEMENTED METHOD FOR ESTIMATING A RAIL TEMPERATURE OF THE RAILS OF A TRACK SECTION USING A TRACK CIRCUIT	2025/11/25
2025/10116	BATTERY MODULE AND ENERGY STORAGE RACK	2025/11/26
2025/10138	A load-indicating device	2025/11/27
2025/10366	SYSTEM FOR AND METHOD OF DISPENSING, CUTTING, AND REELING ROLLED SHEET MATERIALS	2025/12/03
2025/10369	PORTABLE WATER QUALITY SPECTROMETER WITH IOT WIRELESS TRANSMISSION FOR RAPID ANALYSIS	2025/12/03
2025/10468	AN INTEGRATED MINE MONITORING SYSTEM	2025/12/04
2025/10707	SURFACE TREATMENT DEVICE FOR CONCRETE EROSION RESISTANCE	2025/12/11
2025/10708	DETACHABLE WRAPPING SLEEVE FOR COLD PROTECTION AND HEAT INSULATION OF ALMOND TREE TRUNK	2025/12/11
2025/10716	CALCULUS EQUATION CLASSIFICATION EXPLANATION AND DEMONSTRATION DEVICE FOR ADVANCED MATHEMATICS TEACHING	2025/12/11
2025/10966	PENDULUM COUNTERWEIGHT SEMI-SUBMERSIBLE FLOATER FOR OFFSHORE WIND TURBINE AND METHOD OF INSTALLING SAME	2025/12/18
2025/11020	A MELATONIN-ENRICHED COMPOSITION OF PISTACIA VERA (PISTACHIO) AND A METHOD OF PREPARATION THEREOF	2025/12/19
2025/11042	METHOD AND APPARATUS FOR PREVENTING ENTIRE VEHICLE COLLISION FOR VEHICLE, VEHICLE, AND STORAGE MEDIUM	2025/12/19
2026/00120	SMART AGRICULTURAL SOIL POLLUTANT UNMANNED AERIAL VEHICLE ALL-WEATHER THREE-DIMENSIONAL MONITORING AND QUANTIFICATION METHOD	2026/01/05
2026/00158	AN APPARATUS FOR OPERATING A LIQUOR GUN OF A RECOVERY BOILER, A RECOVERY BOILER AND A METHOD OF OPERATING THE APPARATUS	2026/01/05
2026/00160	SULFUR DIOXIDE DOSING APPARATUS AND METHOD	2026/01/05

Application Number	Patent Title	Filing Date
2026/00166	FOUNDATION BED LEVELING METHOD	2026/01/05
2026/00167	RIVER CHANNEL DREDGING METHOD	2026/01/05
2026/00168	HYDRAULIC RECLAMATION CONSTRUCTION METHOD FOR DAM	2026/01/05
2026/00170	GROUNDING DEVICE CONSTRUCTION METHOD	2026/01/05
2026/00171	QUALITY DETECTION METHOD FOR WHARF ARMOR BLOCK	2026/01/05
2026/00172	CAISSON PREFABRICATION METHOD	2026/01/05
2026/00174	METHOD FOR MONITORING SETTLEMENT OF DIKE	2026/01/05
2026/00175	HIGH-PILE WHARF STRUCTURE AND CONSTRUCTION METHOD THEREOF	2026/01/05
2026/00176	COASTAL PROTECTION STRUCTURE AND CONSTRUCTION METHOD THEREOF	2026/01/05
2026/00177	METHOD FOR CONSTRUCTING A WAVE WALL	2026/01/05
2026/00199	FERTILIZATION DEVICE FOR RICE CULTIVATION	2026/01/06
2026/00200	ARTIFICIAL INTELLIGENCE BASED PHARMACEUTICAL SERVICE PROMOTION ANALYSIS METHOD	2026/01/06
2026/00232	IMPACT-ABSORBING PAD AND RELATIVE GARMENT	2026/01/06
2026/00234	PROTECTIVE ARTICLE AND RELATIVE GARMENT	2026/01/06
2026/00238	A METHOD OF REMOVING ETHYLENE VINYL ALCOHOL COPOLYMER FROM A WASTE POLYMER MATERIAL	2026/01/06
2026/00247	SINGLE-CHANNEL NON-REAL-TIME SPEECH ENHANCEMENT METHOD BASED ON TAYLOR MODEL, COMPUTER STORAGE MEDIUM, AND PRODUCT	2026/01/07
2026/00256	APPARATUS AND METHOD FOR CONDITIONING AND DESANDING ORGANIC WASTE SLURRY	2026/01/07
2026/00271	BENZIMIDAZOLE DERIVATIVES	2026/01/07
2026/00303	REUSABLE STRAP TO SECURE PALLETIZED GOODS	2026/01/08
2026/00309	METHODS AND SYSTEMS FOR AGRICULTURAL SPRAYING	2026/01/08
2026/00353	VIRAL VECTORS FOR CANCER THERAPY	2026/01/09
2026/00359	SUBBLOCK CODING INFERENCE IN VIDEO CODING	2026/01/09
2026/00364	PEBBLE-CONTAINING LOW-REBOUND SHOTCRETE AND CONSTRUCTION METHOD THEREFOR	2026/01/09
2026/00368	HIGH-STRENGTH, HIGH-TOUGHNESS AND HIGH-HARDENABILITY GEAR	2026/01/09

Application Number	Patent Title	Filing Date
	SHAFT STEEL, AND MANUFACTURING METHOD THEREFOR	
2026/00485	FLUID APPLICATORS	2026/01/13
2026/00492	METHOD FOR IMPROVING EFFICIENCY AND ACCURACY OF GENE KNOCK-IN USING NON-RESIDENCE END OF CPF1	2026/01/13
2026/00504	USE OF A FORMONONETIN DERIVATIVE IN THE PREPARATION OF A DRUG FOR PREVENTING AND TREATING ACUTE LUNG INJURY	2026/01/13
2026/00530	PALM ACTIVATED DRUG DELIVERY DEVICE	2026/01/14
2026/00531	PALM ACTIVATED DRUG DELIVERY DEVICE	2026/01/14
2026/00545	CONVEYOR BELT SCRAPER	2026/01/14
2026/00552	PEST AND DISEASE IDENTIFICATION AND PREDICTION ALGORITHM BASED ON DEEP LEARNING	2026/01/14
2026/00579	ASSAY SYSTEM CALIBRATION SYSTEMS AND METHODS	2026/01/15
2026/00586	METHOD AND APPARATUS FOR CLOSING A TUBULAR KNITTED ARTICLE AT ONE OF ITS AXIAL ENDS, AT THE END OF ITS PRODUCTION CYCLE ON A CIRCULAR KNITTING MACHINE FOR HOSIERY OR THE LIKE	2026/01/15
2026/00656	SYSTEM AND METHOD FOR HYPERSPECTRAL IMAGE-BASED QUALITY CONTROL ANALYSIS OF CROP LOADS	2026/01/16
2026/00702	A BIO-DERIVED LUMINESCENT NANOMATERIAL COMPOSITION FOR HIGHRESOLUTION SURFACE IMAGING AND METHOD OF PREPARATION THEREOF	2026/01/19
2026/00739	METHOD AND FACILITY FOR SEPARATING A MIXTURE COMPRISING AT LEAST ONE FLUORINATED FLUID AND ONE OR MORE CONTAMINANTS	2026/01/19
2026/00792	FUSION POLYPEPTIDE AJ007 AND USE THEREOF	2026/01/20
2026/00840	TIRE REPAIR APPARATUS FOR ATTACHMENT TO A VEHICLE WHEEL	2026/01/21
2026/00854	APPARATUS, SYSTEM AND METHOD FOR PRODUCING AN IONIZED GAS DISCHARGE FOR TREATMENT OF A MEDIUM	2026/01/21
2026/00889	VORTEX SLURRY PUMP	2026/01/22
2026/00912	METHOD AND APPARATUS FOR CLOSING A TUBULAR KNITTED ARTICLE AT ONE OF ITS AXIAL ENDS, AT THE END OF ITS PRODUCTION	2026/01/22

Application Number	Patent Title	Filing Date
	CYCLE ON A CIRCULAR KNITTING MACHINE FOR HOSIERY OR THE LIKE	
2026/01006	HEAT DISSIPATION PLATE, MIDDLE FRAME, AND ELECTRONIC DEVICE	2026/01/23
2026/01044	An Oral Hygiene Product	2026/01/26
2026/01046	PRO-PERFUME COMPOSITIONS	2026/01/26
2026/01063	GLAZING COMPRISING A TEMPORARY ORGANIC PROTECTIVE LAYER	2026/01/26
2026/01065	3H-IMIDAZO[4,5-B]PYRIDINE COMPOUNDS AS NON-COVALENT MODIFIERS OF AKT1 AND USES THEREOF	2026/01/26
2026/01092	ULTRAHIGH-STRENGTH STEEL PLATE HAVING HIGH R VALUE AND MANUFACTURING METHOD THEREFOR	2026/01/27
2026/01096	TASTE MASKED GRANULE COMPOSITION OF CAFFEINE AND ITS PROCESS OF PREPARATION	2026/01/27
2026/01123	DISINFECTANT PREPARATION DEVICE FOR DAILY CARE IN DISINFECTION SUPPLY CENTER	2026/01/28
2026/01161	AN ANTI-INFLAMMATORY HAIR OIL COMPOSITION FOR THE TREATMENT OF ALOPECIA ARETA AND PROCESS OF PREPARING THE SAME	2026/01/28
2026/01195	LAYER STRUCTURE CONTAINING THERMOCHROMIC OR PH-SENSITIVE SUBSTANCES	2026/01/29
2026/01196	PHARMACEUTICAL COMPOSITION CONTAINING SUBSTITUTED INDOL-5-OL DERIVATIVE AND USE THEREOF	2026/01/29
2026/01217	WOUND DRESSINGS	2026/01/29
2026/01253	A VALVE SYSTEM FOR THE CONTROL OF LIQUID FLOW IN A MICROFLUIDIC CHANNEL ON A LAB-ON-CHIP DEVICE	2026/01/30
2026/01283	PEPTIDE HAVING ACTIVITY OF ALLEVIATING DRY EYE DISEASE AND USES THEREOF	2026/01/30
2026/01301	AN ORAL LIQUID FORMULATION OF APIXABAN	2026/01/30
2026/01319	VARIABLE HEAD GUIDED VERTICAL DROP WEIGHT IMPACT TESTING APPARATUS	2026/02/02
2026/01322	HAPTIC FEEDBACK WEARABLE DEVICE FOR MARKET VOLATILITY ALERTS	2026/02/02
2026/01404	AN AUTONOMOUS MARINE CLEANING SYSTEM	2026/02/03
2026/01426	SEALING DEVICE FOR POSITIONING POINTS IN HOLES OF PROCESS GROUTING	2026/02/03

Application Number	Patent Title	Filing Date
2026/01450	A FEEDING METHOD FOR GRASS CARP REPRODUCTION	2026/02/04
2026/01451	A FEED MIXING DEVICE	2026/02/04
2026/01452	AN ENERGY-SAVING CIRCULAR AQUACULTURE SYSTEM	2026/02/04
2026/01491	A TEMPERATURE-CONTROLLED FOODSERVICE UNIT	2026/02/04
2026/01494	A TINYML BASED EMBEDDED SYSTEM FOR REAL-TIME ANOMALY DETECTION IN MECHANICAL EQUIPMENT USING VIBRATION DATA	2026/02/04
2026/01496	PROBABILISTIC EVALUATION OF STEAM GENERATOR TUBE DEGRADATION WITH STATISTICAL SAMPLING AND ARTIFICIAL INTELLIGENCE	2026/02/04
2026/01501	360-DEGREE LIGHT-EMITTING HIGH-INTENSITY AVIATION OBSTRUCTION LIGHT	2026/02/04
2026/01506	INTELLIGENT DETECTION METHOD AND SYSTEM FOR GASTROINTESTINAL CANCER CELLS BASED ON DEEP LEARNING, MEDIUM, AND DEVICE	2026/02/04
2026/01527	CONSTRUCTION METHOD FOR HIGH-FILL EMBANKMENTS IN SEASONALLY FROZEN REGIONS	2026/02/05
2026/01533	MULTI-LAYER LOGISTICS TRANSPORT VEHICLE	2026/02/05
2026/01534	CROSS-BORDER EXPRESS FULL-LINK RISK MONITORING AND STANDARDIZED SERVICE GUARANTEE METHOD	2026/02/05
2026/01555	AN ARTIFICIAL ORE PILLAR FOR A GOAF AND ITS CONSTRUCTION METHOD	2026/02/05
2026/01558	AN INTEGRATED INSTALLATION AND RECOVERY ROOF DISPLACEMENT MONITORING DEVICE AND METHOD	2026/02/05
2026/01615	NOVEL ACCELERATORS FOR HYDRAULIC COMPOSITIONS BASED ON GRANULATED BLAST FURNACE SLAG	2026/02/06
2026/01626	BREAKOUT SYSTEM FOR A DRILL	2026/02/06
2026/01660	INTELLIGENT SAFETY WARNING METHOD AND SYSTEM BASED ON HUMAN-MACHINE MULTI-SOURCE PERCEPTION	2026/02/09
2026/01683	METHOD OF MANUFACTURING PALM SEQUESTERED CARBON BOARDS	2026/02/09
2026/01684	DETECTION METHOD FOR UNDERWATER ROBOTS AND DRONES	2026/02/09

Application Number	Patent Title	Filing Date
	AND DEVICE SUITABLE FOR ITS IMPLEMENTATION	
2026/01696	BEIDOU OFFSHORE MULTIPATH INTERFERENCE ELIMINATION METHOD AND APPARATUS BASED ON WAVELET PACKET ANALYSIS	2026/02/09
2026/01720	A HIGH-YIELD CULTIVATION METHOD FOR INTERCROPPING MAIZE VARIETIES WITH DIFFERENT PLANT ARCHITECTURES	2026/02/10
2026/01721	DATA QUERY METHOD, APPARATUS, DEVICE AND MEDIUM	2026/02/10
2026/01722	DUAL-DETECTION MECHANISM-BASED 10G MAC BUS SHARING METHOD AND DEVICE	2026/02/10
2026/01728	ANTIBODY CAPABLE OF BINDING TO INTERLEUKIN-31 OR ANTIGEN BINDING FRAGMENT THEREOF, AND PREPARATION METHOD THEREFOR AND USE THEREOF	2026/02/10
2026/01764	HETEROGENEOUS PACKAGING SUBSTRATE WITH LOCALLY EMBEDDED GLASS CORE AND PREPARATION METHOD THEREOF	2026/02/11
2026/01768	BASE PAIR FLUORESCENCE INTENSITY ANALYSIS METHOD BASED ON CNN MODEL AND EXPLAINABLE LEARNING	2026/02/11
2026/01777	IMPREGNATION AND PRESSING DEVICE FOR ADDING AUXILIARY INGREDIENTS TO FERMENTATION MASHES FOR FERMENTED WINES AND METHOD FOR USING SAME	2026/02/11
2026/01779	JAFFLE PAN SUPPORT DEVICE	2026/02/11
2026/01782	ADJUSTABLE METAL PIPE FITTING INNER WALL POLISHING DEVICE FOR MECHANICAL PROCESSING	2026/02/11
2026/01807	A PROCESS FOR EXTRACTING NICKEL FROM GASIFIER SLAG	2026/02/12
2026/01808	DENTAL INSTRUMENT STORAGE AND DISINFECTION BOX	2026/02/12
2026/01841	MICRO-GRID DISTRIBUTED ENERGY STORAGE SYSTEM AND BATTERY SOC BALANCE CONTROL METHOD THEREFOR	2026/02/12
2026/01848	MEDICINE DISPENSING AND GRINDING DEVICE	2026/02/13
2026/01851	CONSTRUCTION AID	2026/02/13
2026/01909	FUEL SYSTEM OF EMERGENCY DIESEL POWER GENERATOR SET FOR NUCLEAR POWER STATION	2026/02/12

Application Number	Patent Title	Filing Date
2026/01935	GENERATING PARALLEL DATA FOR REAL-TIME SPEECH FORM CONVERSION	2026/02/17
2026/01992	A LIQUID FILTER ELEMENT AND COMPONENTS THEREOF	2026/02/18
2026/02022	TOOL FOR MULTI-SOURCE BIODIVERSITY ASSESSMENT	2026/02/19
2026/02028	SYSTEM FOR GENERATING A DATABASE QUERY BASED ON WEB CONTENT ANALYSIS USING GRAPHICAL USER INTERFACE	2026/02/19
2026/02032	DEVICE FOR GENERATING A DATABASE QUERY BASED ON WEB CONTENT ANALYSIS	2026/02/19
2026/02033	DEVICE FOR GENERATING A DATABASE QUERY BASED ON WEB CONTENT ANALYSIS	2026/02/19
2026/02112	CABLE TIE	2026/02/20
2026/02243	VENTURI TUBE AND VENTURI FEEDING DEVICE	2026/02/25
2026/02296	SIMULATION EXPERIMENT SYSTEM FOR DEEP GROUND ENGINEERING CONSTRUCTION WITH HIGH IN-SITU STRESS AND LARGE SPACE	2026/02/26
2026/02297	EXPERIMENTAL METHOD FOR TESTING FULL-FACE ROCK BREAKING MECHANISM UNDER HIGH GEOSTRESS ENVIRONMENT	2026/02/26
2026/02299	COMPREHENSIVE SIMULATION EXPERIMENTAL SYSTEM FOR MODULAR CONSTRUCTION TECHNOLOGY UNDER DEEP GROUND MULTI-FIELD COUPLING	2026/02/26
2026/02349	IMPLANTABLE CARDIAC PACEMAKER-BASED VENTRICULAR ELECTROGRAM-VENTRICULAR PRESSURE DUAL-SENSING SYSTEM AND METHOD	2026/02/27
2026/02350	GAS EXTRACTION AND HOLE SEALING DEVICE	2026/02/27
2026/02360	BATTERY PACK SLEEP WAKE-UP METHOD AND CIRCUIT	2026/02/27
2026/02415	A MICROBIAL PREPARATION, PREPARATION METHOD AND APPLICATION THEREOF	2026/03/02
2026/02416	METHOD AND SYSTEM FOR IDENTIFYING NCRNA PROTEIN-CODING POTENTIAL BASED ON MULTI-SCALE SEMANTIC AUGMENTATION AND FEATURE CALIBRATION	2026/03/02

Application Number	Patent Title	Filing Date
2026/02417	MACHINE LEARNING-BASED PERSONALIZED PUSH SYSTEM FOR FINANCIAL SELF-SERVICE TERMINALS	2026/03/02
2026/02419	DEVICE FOR LAUNCHING AIRBORNE OBJECTS	2026/03/02
2026/02445	MICRO-PARTICLE TISSUE PREPARATION DEVICE	2026/03/03
2026/02446	PORTABLE GAUZE COUNTING DEVICE FOR OPERATING ROOM	2026/03/03
2026/02447	IDENTIFICATION METHOD FOR INCREASING THE INCIDENCE OF SOUTHERN RICE BLACK-STREAKED DWARF DISEASE	2026/03/03
2026/02448	METHOD FOR BREEDING RICE VARIETY RESISTANT TO SOUTHERN RICE BLACK-STREAKED DWARF DISEASE	2026/03/03
2026/02449	A METHOD FOR CONSTRUCTING A GREEN PREVENTION AND CONTROL SYSTEM FOR WALNUT PESTS AND DISEASES	2026/03/03
2026/02450	MULTI-SOURCE DATA FUSION RESOURCE ALLOCATION OPTIMIZATION DECISION SYSTEM	2026/03/03
2026/02451	DRYING BINS	2026/03/03
2026/02454	RAPID DETECTION KIT BASED ON ?-CYCLODEXTRIN-FUNCTIONALIZED MAGNETIC MESOPOROUS CARBON COMPOSITE MATERIAL AND USE THEREOF	2026/03/03
2026/02455	HEPATOBILIARY IMAGE SEGMENTATION METHOD BASED ON 2.5D MODEL AND WATERSHED ANALYSIS	2026/03/03
2026/02456	METHOD FOR ENHANCING ROSMARINIC ACID CONTENT IN SARCANDRA GLABRA THROUGH VACUUM FREEZE DRYING PROCESSING	2026/03/03
2026/02457	METHOD AND SYSTEM FOR QUANTITATIVE ASSESSMENT OF POSTOPERATIVE HEPATOBILIARY LESIONS BASED ON DLPE	2026/03/03
2026/02461	ENABLING SPECIAL UE MEASUREMENT BEHAVIOR	2026/03/03
2026/02473	DRYING METHOD FOR IMPROVING FLAVOR AND QUALITY OF GARLIC SLICES	2026/03/04
2026/02474	EFFICIENT AND QUALITY-PRESERVING STERILIZATION METHOD FOR GINGER JUICE	2026/03/04

Application Number	Patent Title	Filing Date
2026/02475	METHOD FOR ENHANCING POLYSACCHARIDE CONTENT AND ANTIOXIDANT ACTIVITY OF EDIBLE MUSHROOM POWDER	2026/03/04
2026/02476	PRESS BAND SUITABLE FOR POST LUMBAR PUNCTURE IN HEMATOLOGY DEPARTMENT	2026/03/04
2026/02477	3D PRINTING METHOD AND DEVICE BASED ON ACETABLAR BONE DEFECT MODEL	2026/03/04
2026/02479	BOW-SHAPED FLEXIBLE SHIELD SYSTEM AND SUPPORT FOR GOB-SIDE ENTRY RETAINING IN COAL MINES	2026/03/04
2026/02480	COMMUNICATION SERVICE SYSTEM AND COMMUNICATION SERVICE PROCESSING METHOD	2026/03/04
2026/02481	AI-BASED CONTROL METHOD FOR VARIABLE-FREQUENCY HEAT PUMPS AND CONTROL SYSTEM USING THE SAME	2026/03/04
2026/02485	BREAST CARE DEVICE POST-BREAST TUMOR SURGERY	2026/03/04
2026/02486	ADJUSTABLE ANGLE INFUSION STAND FIXATION DEVICE FOR ONCOLOGY DEPARTMENT	2026/03/04
2026/02487	CABLE MEMBRANE STRUCTURE TESTING DEVICE	2026/03/04
2026/02488	HUJUN ZHENFAN DECOCTION AND USES THEREOF	2026/03/04
2026/02490	ANTI-C-MET NANOBODY AND USE THEREOF	2026/03/04
2026/02530	A FOREST SEEDLING ROOT CUTTING MACHINE	2026/03/05
2026/02534	A HEAT TREATMENT METHOD FOR A HIGH-STRENGTH AND HIGH-TOUGHNESS DUCTILE IRON CRANKSHAFT	2026/03/05
2026/02535	A WATER-SAVING IRRIGATION SYSTEM FOR THE CULTIVATION OF FARMLAND CROPS	2026/03/05
2026/02544	METHOD FOR SECURELY ASSESSING A DEVICE CONFIGURATION	2026/03/05
2026/02545	METHOD FOR SECURELY ASSESSING A DEVICE CONFIGURATION	2026/03/05
2026/02546	CRUSHER FEED CHUTE COVER	2026/03/05
2026/02551	SYSTEM PROVIDING AN AUTOMATIC PATCH OF ELECTRICAL SIGNALS BETWEEN TWO DIFFERENT DEVICES AND ASSOCIATED METHOD	2026/03/05
2026/02573	COATING FOR OPTIMIZING QUALITY OF FRIED FRENCH FRIES,	2026/03/06

Application Number	Patent Title	Filing Date
	PREPARATION METHOD AND APPLICATION THEREOF	
2026/02575	PORTABLE ACUPUNCTURE NEEDLE BOX FOR ACUPUNCTURE	2026/03/06
2026/02576	HAND WASHING DEVICE FOR NURSING IN INFECTIOUS DISEASE DEPARTMENTS	2026/03/06
2026/02577	DUST-PROOF CABINET WITH ENERGY-SAVING DEVICE	2026/03/06
2026/02579	AN ENERGY-SAVING DEVICE AND A PRODUCTION METHOD THEREOF	2026/03/06
2026/02583	DEFORMABLE INTELLIGENT ELDERLY-CARE WHEELCHAIR ROBOT	2026/03/06
2026/02626	AN IOT-ENABLED MULTI-SENSOR SYSTEM FOR FOG AND OBSTACLE DETECTION ON HIGHWAYS	2026/03/06
2026/02627	SUSTAINABLE AVIATION FUEL COMPOSITION COMPATIBLE WITH CONVENTIONAL AVIATION TURBINE FUEL	2026/03/06
2026/02628	SECURE BLUETOOTH-ENABLED SMART HOME CONTROL SYSTEM WITH MOBILE APPLICATION PAIRING AND DEVICE MANAGEMENT	2026/03/06
2026/02629	A MACHINE LEARNING BASED REAL-TIME BIODEGRADABLE WASTE CLASSIFICATION SYSTEM	2026/03/06
2026/02630	A LOW-POWER NIGHTTIME PEDESTRIAN DETECTION AND INTENTION PREDICTION SYSTEM FOR AUTONOMOUS VEHICLES	2026/03/06
2026/02631	HERBAL FORMULATION COMPRISING DRIED QUINCE (CYDONIA OBLONGA) AND QUINCE SEED MUCILAGE FOR COUGH MANAGEMENT	2026/03/06
2026/02632	ARTIFICIAL INTELLIGENCE ASSISTED SUPERCRITICAL TRANSESTERIFICATION SYSTEM FOR CONVERTING WASTE COOKING OIL TO BIODIESEL	2026/03/06
2026/02634	AN AI-ENHANCED AIR QUALITY MONITORING AND VENTILATION SYSTEM	2026/03/06
2026/02635	IN VITRO CONTROL SYSTEM FOR TARGETED DRUG DELIVERY MEDICAL DEVICE AND USE METHOD THEREOF	2026/03/09
2026/02636	NOVEL TANK	2026/03/09
2026/02637	AN INTELLIGENT SUPERVISION METHOD AND SYSTEM FOR BIPV EQUIPMENT GROUPS	2026/03/09
2026/02639	FINANCIAL AND ECONOMIC MATERIAL ORGANIZING APPARATUS	2026/03/09

Application Number	Patent Title	Filing Date
2026/02640	ORGANOSILICON SLURRY SEPARATION METHOD AND SYSTEM	2026/03/09
2026/02647	AN AGRICULTURAL SYSTEM FOR CROP DISEASES DETECTION, PESTICIDES RECOMMENDATION AND MARKET PRICE FORECASTING	2026/03/09
2026/02648	A SWARM-BASED EDGE COMPUTING SYSTEM FOR EFFECTIVE TASK MANAGEMENT	2026/03/09
2026/02649	AN AI-POWERED SHOPPING CART WITH TWO CAMERAS AND DYNAMIC QR FOR RETAIL CHECKOUT AND FRAUD PREVENTION	2026/03/09
2026/02650	A DECENTRALIZED WEB3-BASED CAPTIVE PORTAL SYSTEM FOR TOKEN-GATED NETWORK ACCESS CONTROL	2026/03/09
2026/02651	AN AI BASED PERSONALIZED VEHICLE ACCESSORY CUSTOMIZATION & RECOMMENDATION SYSTEM	2026/03/09
2026/02652	AN AI-DRIVEN ETL (EXTRACT-TRANSFORM-LOAD) AUTOMATION & REAL-TIME ANALYTICS SYSTEM	2026/03/09
2026/02653	A SYSTEM FOR AUTOMATED MULTIMODAL MEDIA GENERATION FROM A TEXTUAL DATA SOURCE	2026/03/09
2026/02654	A DEEP LEARNING–BASED DIRECTION FINDER SYSTEM FOR CLASSIFICATION OF LPI SIGNALS INTO BURST AND FREQUENCY HOPPING WITH HOP RATE ESTIMATION	2026/03/09
2026/02655	AN AI POWERED PREDICTIVE AND REINFORCEMENT LEARNING SYSTEM FOR ENERGY OPTIMIZATION IN INDUSTRIAL AND COMMERCIAL BUILDINGS	2026/03/09
2026/02656	AN AI-POWERED AUGMENTED REALITY SYSTEM FOR RETAIL NAVIGATION AND PRODUCT INFORMATION	2026/03/09
2026/02657	A NOISE-TOLERANT MULTI-DATASET EEG BASED SYSTEM FOR EPILEPTIC SEIZURE PREDICTION AND MULTI-TYPE CLASSIFICATION	2026/03/09
2026/02658	A HYBRID SWIN TRANSFORMER-EFFICIENTNET-U-NET SYSTEM FOR ENHANCED BRAIN TUMOR SEGMENTATION	2026/03/09
2026/02659	AN IOT INTEGRATED ARTIFICIAL INTELLIGENCE BASED AGRICULTURAL WASTE FORECASTING SYSTEM	2026/03/09
2026/02660	AN AI-POWERED REFEREE AND COACHING SYSTEM FOR KHO-KHO	2026/03/09

Application Number	Patent Title	Filing Date
	USING COMPUTER VISION AND WEARABLE MOTION SENSORS	
2026/02661	AN AI AND MULTI-SENSORY REGULATION BASED WEARABLE DEVICE FOR EARLY ANXIETY ANTICIPATION	2026/03/09
2026/02662	AN NLP BASED REAL-TIME MULTI-DOMAIN COMPARATIVE DATA AGGREGATION SYSTEM	2026/03/09
2026/02663	AN INTELLIGENT ACOUSTIC SURVEILLANCE SYSTEM FOR UNAUTHORIZED HONKING WITH AUTO-FINE MECHANISM	2026/03/09
2026/02666	A METHOD, AN APPARATUS AND A COMPUTER PROGRAM PRODUCT FOR VIDEO ENCODING AND DECODING	2026/03/09
2026/02670	FUNGICIDAL COMPOSITION AND PROCESS OF PREPARATION THEREOF	2026/03/09
2026/02671	HYBRID ENERGY STORAGE SYSTEM AND CONTROL METHOD THEREFOR	2026/03/09
2026/02673	HAIR TREATMENT COMPOSITION WITH CATIONIC SURFACTANT, FATTY ALCOHOLS, AND LOW POLAR OIL	2026/03/09
2026/02675	DISC TUMBLER CYLINDER LOCK AND KEY COMBINATION	2026/03/09
2026/02718	CLOUD-BASED INTELLIGENT FUSION ANALYSIS PLATFORM FOR HETEROGENEOUS DATA SOURCES	2026/03/10
2026/02720	HEPATIC VESSEL THREE-DIMENSIONAL RECONSTRUCTION SYSTEM BASED ON IMAGE SEGMENTATION	2026/03/10
2026/02724	SEISMIC RUPTURE DISTRIBUTION INVERSION METHOD WITH INSAR RELATIVE PHASE OBSERVATIONS	2026/03/10
2026/02725	RPA PRIMER-PROBE SET AND KIT FOR DETECTING PORCINE EPIDEMIC DIARRHEA VIRUS, TRANSMISSIBLE GASTROENTERITIS VIRUS, AND PORCINE DELTACORONAVIRUS, DETECTION METHOD THEREFOR AND APPLICATION THEREOF	2026/03/10
2026/02726	SUPPORT COMBINATION STRUCTURE FOR REPLACING BEAM NEST OF TUBE SUPPORTING BEAM IN VERTICAL SHAFT OF POTASH MINE	2026/03/10
2026/02727	WATER LEVEL MONITORING APPARATUS FOR UNDERGROUND PUMP ROOM	2026/03/10
2026/02728	METHOD AND SYSTEM FOR DYNAMIC PRESENTATION OF LANDSCAPE DESIGN BASED ON VIRTUAL REALITY	2026/03/10

Application Number	Patent Title	Filing Date
2026/02729	WATERPROOF AND EFFICIENT DUST FALL CLEANING AND CYCLING COMBINED DEVICE FOR POTASH MINE BELT CONVEYOR	2026/03/10
2026/02730	BREADTH DATA COLLECTION METHOD	2026/03/10
2026/02731	INTELLIGENT ISOLATED DYNAMIC HARDWARE PARTITIONING SYSTEM FOR CLOUD SERVERS	2026/03/10
2026/02732	INTELLIGENT ENERGY LOSS CALCULATION METHOD AND COMPENSATION APPARATUS THEREOF	2026/03/10
2026/02733	MACHINE VISION-BASED INTELLIGENT WAREHOUSING MULTI-VEHICLE AUTONOMOUS DRIVING COLLABORATIVE DECISION-MAKING SYSTEM AND METHOD	2026/03/10
2026/02734	PASSIVE DETECTION CONTROL SYSTEM FOR FUEL ROD ENRICHMENT BASED ON INTELLIGENT OPTIMIZATION	2026/03/10
2026/02735	POULTRY HOUSE COMPRISING HEATING STRUCTURE	2026/03/10
2026/02736	SKIN ANTI-AGEING TREATMENT METHOD USING HYDRODISSECTION AND DETECTION SYSTEM	2026/03/10
2026/02742	A CLOUD-BASED INTEGRATED ENVIRONMENTAL MONITORING SYSTEM	2026/03/10
2026/02743	A GAS LEAKAGE AND HUMAN OCCUPANCY DETECTION SYSTEM FOR ENHANCED SAFETY	2026/03/10
2026/02744	AN IOT-BASED INDOOR OCCUPANCY DETECTION AND ANALYTICS SYSTEM	2026/03/10
2026/02745	A DOOR LOCK SYSTEM USING ESP32 WITH OFFLINE TIME-BASED OTP VERIFICATION	2026/03/10
2026/02746	AN IOT-BASED SMART DROWSINESS DETECTION AND VEHICLE SAFETY SYSTEM	2026/03/10
2026/02747	AN IOT-BASED REAL-TIME WATER QUALITY MONITORING AND ALERT SYSTEM	2026/03/10
2026/02748	AN IOT-ENABLED VIEWER PROXIMITY DETECTION AND AUTOMATIC DISPLAY CONTROL SYSTEM FOR EYE STRAIN PREVENTION IN CHILDREN	2026/03/10
2026/02749	AN IOT-BASED FARM PROTECTION AND AUTOMATION SYSTEM	2026/03/10
2026/02750	AN IOT-ENABLED FLOATING BUOY FOR REAL-TIME DETECTION AND	2026/03/10

Application Number	Patent Title	Filing Date
	MONITORING OF MICROPLASTICS IN WATER	
2026/02751	AN IOT-BASED PARKING SYSTEM WITH REAL-TIME SLOT DETECTION AND INTELLIGENT RESERVATION MANAGEMENT	2026/03/10
2026/02763	A SYSTEM FOR AUTOMATED LAYERING AND FILLING OF MULTIPLE GRAINS AND ASSEMBLY IN A CONFINED REGION AND A METHOD THEREOF	2026/03/10
2026/02771	AN IOT-ENABLED GEOPHONE-BASED SEISMIC DETECTION AND ALERT SYSTEM	2026/03/10
2026/02772	A GESTURE BASED LOCKING SYSTEM FOR AUTHENTICATION OF ELECTRONIC DEVICES	2026/03/10
2026/02773	RANDOM DATA GENERATION METHOD AND SYSTEM FOR MATHEMATICAL STATISTICS	2026/03/10
2026/02774	INTELLIGENT ZONING - CONTROLLED BIPV CURTAIN WALL COMPREHENSIVE UTILIZATION SYSTEM	2026/03/11
2026/02775	A DEGRADABLE VEGETATIVE SUBSTRATE FIXING DEVICE SUITABLE FOR SLOPE ECOLOGICAL RESTORATION	2026/03/11
2026/02777	AN INTELLIGENT MONITORING SYSTEM FOR PLAYERS' PHYSIOLOGICAL CONDITIONS	2026/03/11
2026/02778	LOGISTICS FORKLIFT HAVING COLLISION AVOIDANCE	2026/03/11
2026/02779	IDENTIFICATION AND APPLICATION OF HAP19 GENOTYPE OF SPSB GENE	2026/03/11
2026/02780	ACTIVE SAMPLING DEVICE FOR PERSISTENT ORGANIC POLLUTANTS (PAHS) IN THE ATMOSPHERE	2026/03/11
2026/02781	DAMAGE-PREVENTION PRODUCT PLACEMENT DEVICE FOR LOADING/UNLOADING AND TEMPORARY STORAGE AREAS IN AN INTELLIGENT MANUFACTURING LINE	2026/03/11
2026/02783	MUSIC RECOMMENDATION SYSTEM BASED ON BIG DATA	2026/03/11
2026/02784	CABLE CLAMPING DEVICE FOR ELECTRONIC INFORMATION COMMUNICATION	2026/03/11
2026/02785	REAL-TIME DETECTION AND ACTIVE PRESSURE RELIEF INTEGRATED DEVICE FOR ROCK BURST RISK DURING TUNNEL CONSTRUCTION	2026/03/11

Application Number	Patent Title	Filing Date
2026/02794	VIADUCT WIND TUNNEL MODEL AND TEST METHOD	2026/03/11
2026/02795	AMMONIUM FERRIC CITRATE-ORGANIC ACID COMPLEX, AND PREPARATION METHOD THEREFOR AND USE THEREOF	2026/03/11
2026/02796	CLOCK SWITCHING CONTROL CIRCUIT AND CONTROL METHOD	2026/03/11
2026/02811	METHOD FOR GENERATING A SOYA PROTEIN TEXTURATE	2026/03/11
2026/02813	DANSYLAMIDE-MODIFIED COMPOUNDS TARGETING PSMA, PREPARATION METHOD THEREFOR, AND USE THEREOF	2026/03/11
2026/02832	TEMPERATURE DIFFERENCE SELF-POWERED ELECTROCHROMIC INTELLIGENT WINDOW AND PREPARATION METHOD THEREOF	2026/03/12
2026/02833	A BATTERY PRESSURE DETECTION DEVICE	2026/03/12
2026/02834	SPRAYING AND FERTILIZING METHOD, SYSTEM, AND MOTORCYCLE FOR AIR-GROUND DUAL-USE MANNED UNMANNED FLYING MOTORCYCLE	2026/03/12
2026/02867	NON-DESTRUCTIVE TESTING DEVICE FOR DEFECTS IN REINFORCED CONCRETE STRUCTURES	2026/03/13
2026/02868	IMAGE-BASED VISIBLE FAULT DETECTION METHOD FOR PHOTOVOLTAIC MODULES	2026/03/13
2026/02871	BENEFICIATION METHOD FOR FINE-GRAINED CYANIDE TAILINGS	2026/03/13
2026/02872	HARPADON NEHEREUS FLOSS PREPARED BY MICROWAVE-ASSISTED HOT AIR DRYING AND VACUUM FRYING AND PREPARATION METHOD THEREOF	2026/03/13
2026/02873	PREPARATION METHOD AND USE OF ANTI-AGING FERMENTATION EXTRACT	2026/03/13
2026/02874	IDENTIFICATION AND APPLICATION OF HAP1 GENOTYPE OF SPSB GENE	2026/03/13
2026/02877	METHOD FOR DISTINGUISHING ORE DEPOSIT TYPES BY USING MACHINE LEARNING AND SPHALERITE TRACE ELEMENTS	2026/03/13
2026/02879	METHOD FOR ANALYZING DUCTILITY INDICATORS OF METALLIC MATERIALS	2026/03/13
2026/02881	A METHOD FOR RAPID ESTIMATION OF REGIONAL WINTER WHEAT YIELD BASED ON CROP GROWTH MODEL AND MULTI-SOURCE REMOTE SENSING ASSIMILATION	2026/03/13

Application Number	Patent Title	Filing Date
2026/02882	AN ARDUINO BASED SYSTEM FOR AUTOMATIC AND CONTACTLESS WASTE DISPOSAL	2026/03/13
2026/02883	A VENTILATION AND AIR PURIFICATION SYSTEM WITH INTEGRATED OCCUPANCY AND ENVIRONMENTAL SENSING	2026/03/13
2026/02885	A COMPREHENSIVE QUALITY ASSESSMENT SYSTEM FOR PRE-PRIMARY EDUCATIONAL INSTITUTIONS	2026/03/13
2026/02886	AN IOT BASED SHELF INVENTORY MONITORING AND REFILL ALERT SYSTEM	2026/03/13
2026/02891	REAL-TIME CLOCK CIRCUIT, INTEGRATED CIRCUIT, ELECTRONIC DEVICE, AND DESIGN METHOD	2026/03/13
2026/02912	FORMULATION FOR IMPROVING SWEETNESS OF THE RARE SUGARS WITHOUT ALTERING THE TEXTURE AND FLAVOUR AND TO THE METHOD THEREOF	2026/03/13
2026/02958	AUTOMATIC WINDING DEVICE FOR POWER TRANSFORMER PRODUCTION	2026/03/16
2026/02959	OIL LEAKAGE DETECTION DEVICE FOR TRANSFORMER OIL USED IN OIL-IMMERSED TRANSFORMER	2026/03/16
2026/02961	DRY-TYPE TRANSFORMER FOR SMART GRID	2026/03/16
2026/02962	INTELLIGENT PRICING AND DYNAMIC REVENUE MANAGEMENT OPTIMIZATION SYSTEM	2026/03/16
2026/02964	LITHIUM-RICH CATION-DISORDERED ROCKSALT POSITIVE ELECTRODE MATERIAL AND PREPARATION METHOD AND APPLICATION THEREOF	2026/03/16
2026/02966	AN INTEGRATED DRIP IRRIGATION CULTIVATION METHOD FOR SUGARCANE	2026/03/16
2026/02994	NITROGEN-DOPED HARD CARBON SUITABLE FOR USE AS ANODE MATERIAL FOR SODIUM-ION BATTERIES AND PREPARATION METHOD THEREOF	2026/03/17
2026/02995	FIRE SAFETY RESCUE ELEVATOR	2026/03/17
2026/02996	A SYSTEM AND METHOD FOR DEVELOPING AND SIMULATING AN EFFECTIVE NEOANTIGEN MULTI-EPITOPIC COLORECTAL CANCER VACCINE	2026/03/17
2026/02997	HYBRID CHARGING NEW ENERGY VEHICLE	2026/03/17

Application Number	Patent Title	Filing Date
2026/03003	WIND TURBINE	2026/03/17
2026/03033	AIGC-BASED DYNAMIC GENERATION SYSTEM FOR ENGLISH GRADED READING TEXTS	2026/03/18
2026/03034	FAULT DIAGNOSIS METHOD AND SYSTEM FOR OFFSHORE WIND TURBINES BASED ON MULTI- SOURCE HETEROGENEOUS TIME SERIES AND ONLINE UPDATE MECHANISM, AND MEDIUM	2026/03/18
2026/03035	ENVIRONMENT MONITORING DEVICE	2026/03/18
2026/03037	GENERATIVE AI-BASED ENGLISH SITUATIONAL DIALOGUE SIMULATION INTERACTIVE SYSTEM	2026/03/18
2026/03038	SCIENCE POPULARIZATION METHOD FOR NON PHARMACOLOGICAL CARE OF ELDERLY PEOPLE WITH COGNITIVE IMPAIRMENT IN THE COMMUNITY	2026/03/18
2026/03039	SIMULATION DEMONSTRATION DEVICE FOR THE DIGITAL EFFECTIVENESS OF TRADITIONAL INDUSTRIES	2026/03/18
2026/03040	PSYCHIATRIC TRANSFER BED WITH LIMB ASSISTED FIXATION FUNCTION	2026/03/18
2026/03044	CAPACITIVE SENSING STRUCTURE	2026/03/18
2026/03045	A WEARABLE HAPTIC BAND FOR OBSTACLE DETECTION AND PROVIDING TACTILE FEEDBACK FOR VISUALLY IMPAIRED USERS	2026/03/18
2026/03046	A VOICE-BASED DIRECTION DETECTING ROBOTIC SYSTEM	2026/03/18
2026/03047	AN AUTOMATED, AI-ENABLED BACKGROUND REMOVAL SYSTEM FOR DIGITAL IMAGES	2026/03/18
2026/03048	AN ADVANCED CIRCUIT BREAKER SIMULATION SYSTEM FOR PROTECTION RELAY TESTING AND BREAKER OPERATION TRAINING	2026/03/18
2026/03049	A DUAL NETWORK MOTOR AUTOMATION SYSTEM WITH POWER CONSUMPTION MONITORING	2026/03/18
2026/03050	METHOD FOR DIRECT LIQUID CHROMATOGRAPHY-TANDEM MASS SPECTROMETRY DETECTION OF PUBERULIC ACID WITHOUT DERIVATIZATION	2026/03/18
2026/03051	AN ESP32-BASED RIVER CLEANING SYSTEM WITH CONVEYOR MECHANISM FOR FLOATING WASTE REMOVAL	2026/03/18

Application Number	Patent Title	Filing Date
2026/03052	AN AI-POWERED ROVER FOR METAL DETECTION AND SOIL SAMPLING	2026/03/18
2026/03053	REAL-TIME MONITORING SYSTEM FOR ATMOSPHERIC RIVER WATER VAPOR TRANSPORT BASED ON QUANTUM SENSING AND INTERNET OF THINGS	2026/03/18
2026/03054	A COMPREHENSIVE BLOOD DONATION MANAGEMENT SYSTEM	2026/03/18
2026/03081	AN INTEGRATED DEVICE FOR HARVESTING, DEWATERING, AND CLOSED-LOOP RECOVERY OF PRESSED LIQUID FROM ENTEROMORPHA	2026/03/19
2026/03082	PERSONALIZED OBESITY WEIGHT LOSS EFFECTIVENESS TRACKING AND EVALUATION SYSTEM	2026/03/19
2026/03083	MULTI-MODAL COLLABORATION-BASED FAULT DIAGNOSIS METHOD AND SYSTEM FOR OFFSHORE WIND TURBINE GEARBOX	2026/03/19
2026/03084	FURNACE-TOP MOUNTED COKING CRUSHING AND CLEANING DEVICE	2026/03/19
2026/03085	MULTI-DIMENSIONAL HYPERTENSION DATA ACQUISITION SYSTEM AND INTELLIGENT INTERVENTION METHOD THEREOF	2026/03/19
2026/03086	ARTIFICIAL INTELLIGENCE-BASED ARTHRITIS REHABILITATION TRAINING SYSTEM AND EFFICACY ASSESSMENT METHOD	2026/03/19
2026/03087	INTELLIGENT EARLY WARNING SYSTEM FOR FALL RISK BASED ON ENVIRONMENTAL INTERACTION BEHAVIOR OF THE ELDERLY	2026/03/19
2026/03088	INTELLIGENT MONITORING SYSTEM FOR SYSTEMIC SCLEROSIS SKIN CARE	2026/03/19
2026/03089	PREPARATION METHOD FOR STERILE SODIUM CARBOXYMETHYL CELLULOSE LIQUID DRESSING	2026/03/19
2026/03090	EXTRACTION METHOD FOR IMPROVING TOTAL PHENOLIC YIELD OF FLOS SOPHORAE IMMATURUS	2026/03/19
2026/03091	AUTOMATIC BELT CENTERING DEVICE	2026/03/19
2026/03092	NEPHRITIS PRURITUS DECOCTION AND PREPARATION METHOD AND USE THEREOF	2026/03/19
2026/03094	LOW-COST SILICON-CARBON ANODE MATERIAL AND MANUFACTURING METHOD THEREFOR	2026/03/19
2026/03103	OIL CYLINDER STRUCTURE CONVENIENT FOR ADJUSTMENT	2026/03/19

Application Number	Patent Title	Filing Date
2026/03128	STEEL STRUCTURE PREFABRICATED BUILDING WITH DAMPING FUNCTION	2026/03/20
2026/03129	CODON-OPTIMIZED TREX2 GENE AND APPLICATION THEREOF IN IMPROVING EFFICIENCY OF MULTIPLEX GENOME EDITING IN TRITICUM AESTIVUM	2026/03/20
2026/03130	A MULTI-MODE COUPLED VIBRATING SCREEN AND A METHOD FOR SCREENING NANO-SCALE FINE SOIL PARTICLES	2026/03/20
2026/03131	INTERLOCKING CONTROL SYSTEM FOR ROLLING SHUTTER DOORS AND LIGHTING IN VEHICLE CROSS-PASSAGES OF EXPRESSWAY TUNNELS	2026/03/20
2026/03136	COPPER WIRE LOADING RACK FOR WELDING STRIP PROCESSING	2026/03/20
2026/03137	BULK RESIN INJECTION SYSTEM	2026/03/20
2026/03196	A METHOD FOR EXTRACTING GERMANIUM FROM COAL ASH CONTAINING GERMANIUM	2026/03/23
2026/03197	COMPOUND RADIX SOPHORAE FLAVESCENTIS CREAM FOR TREATING ECZEMA AND PREPARATION METHOD THEREFOR	2026/03/23
2026/03198	METHOD FOR PREDICTING TRANSFORMATIONS IN TRADITIONAL HOUSE FORMS BASED ON SOCIO-CULTURAL FACTORS IN RURAL HILL REGIONS	2026/03/23
2026/03199	A SYSTEM AND METHOD FOR PREVENTING CYBER-ATTACKS IN AN ELECTRONIC COMMERCE PLATFORM	2026/03/23
2026/03201	SUBLINGUAL MULTIPARTICULATE COMPOSITION AND METHOD FOR PROVIDING RAPID MIGRAINE RELIEF USING TRIPTANS	2026/03/23
2026/03202	C-PHYCOCYANIN-BASED THERAPEUTIC COMPOSITION AND IN VITRO METHOD FOR MODULATING HYPERGLYCEMIA AND GLYCATION IN AN NRK-52E RENAL CELL MODEL	2026/03/23
2026/03208	METHOD FOR OPTIMIZING COMMUNICATION QUALITY AND COST OF INTERCOM DEVICES	2026/03/23
2026/03239	PREPARATION METHOD FOR (2S,4R,7R,8R)-3,3,7,11-TETRAMETHYLTRICYCLO[6.3.0.02.4]UNDEC-1(11)-ENE	2026/03/24
2026/03240	INDEPENDENT DRIVING STRUCTURE FOR LEFT AND RIGHT WHEEL-SIDE MOTORS OF PURE ELECTRIC TRICYCLE	2026/03/24

Application Number	Patent Title	Filing Date
2026/03241	PROCESS FOR PREPARING HIGH-ABRASION-RESISTANT PAVEMENT MATERIALS UTILIZING STEEL SLAG AND RECLAIMED ASPHALT PAVEMENT (RAP) MATERIALS	2026/03/24
2026/03242	MULTIFUNCTIONAL PREFABRICATED PIPELINE-INTEGRATED PARTITION WALL STRUCTURE	2026/03/24
2026/03243	DUST-PROOF PREFABRICATED PARTITION WALL STRUCTURE	2026/03/24
2026/03247	METHOD FOR EVALUATING PERFORMANCE OF ZINC OXIDE NANOPARTICLES COMBINED WITH ANIONIC SURFACTANTS FOR ENHANCED OIL RECOVERY	2026/03/24
2026/03248	SYSTEM AND METHOD FOR PRIVACY-PRESERVING AND SECURE LIBRARY OPERATIONS USING BLOCKCHAIN TECHNOLOGY	2026/03/24
2026/03249	SMART LIBRARY RESOURCE MANAGEMENT SYSTEM USING EDGE ANALYTICS, SDN-BASED TRAFFIC CONTROL, AND PRIVACY-PRESERVING CIRCULATION INTELLIGENCE	2026/03/24
2026/03250	INHALABLE BIODEGRADABLE NANOPARTICLE COMPOSITION FOR PULMONARY DETOXIFICATION	2026/03/24
2026/03251	A METHOD FOR ISOLATING AND IDENTIFYING PLASTIC-DEGRADING BACTERIAL STRAINS FROM COAL ENVIRONMENTS	2026/03/24
2026/03252	AUXILIARY DEVICE FOR ACCURATELY POSITIONING VERTICAL PRESTRESSED STEEL STRAND	2026/03/24
2026/03253	ANTI-SETTLEMENT DEVICE FOR ARCH FOOT OF TUNNEL STEEL ARCH FRAME	2026/03/24
2026/03254	AIR INLET RETAINING WALL STRUCTURE OF UNDERGROUND EXPLOSIVE MATERIAL DEPOT	2026/03/24
2026/03255	SUPPORT METHOD FOR CONTROLLING DEFORMATION OF DEEP HIGH-GROUND-PRESSURE PERMANENT LARGE-SECTION ROADWAY	2026/03/24
2026/03273	A DESERTIFIED GRASSLAND ECOLOGICAL RESTORATION DEVICE AND PRECISION SEEDING METHOD	2026/03/24
2026/03313	CHROMITE EXPLORATION METHOD AND SYSTEM BASED ON MULTI-METHOD COMBINATION	2026/03/25

Application Number	Patent Title	Filing Date
2026/03314	SAFETY PROTECTION AND FIXING DEVICE FOR WIND TURBINE GENERATOR FOUNDATION	2026/03/25
2026/03315	A PLANTING SUPPORT DEVICE FOR PREVENTING MELON VINES FROM TILTING	2026/03/25
2026/03316	POWER TRANSMISSION TOWER FOUNDATION STRUCTURE FOR FRIGID ZONE WETLANDS	2026/03/25
2026/03317	PREPARATION METHOD FOR POLYLACTIC ACID POROUS MICROSPHERES AND USE IN STEM CELL INOCULATION	2026/03/25
2026/03318	A PREPARATION AND APPLICATION METHOD OF A COASTAL SALINE-ALKALI SOIL CONDITIONER UTILIZING INVASIVE PLANT RESOURCES	2026/03/25
2026/03324	CASTING SOLUTION COMPOSITION AND CARBON-BASED MEDIATOR MEMBRANE	2026/03/25
2026/03386	RARE EARTH ELEMENT-DOPED PEROVSKITE SOLAR CELL AND PREPARATION METHOD THEREOF	2026/03/26
2026/03387	A PHASE-CHANGE COOLING SYSTEM, COLD STORAGE FACILITY, AND OPERATING STRATEGY FOR THE COLD STORAGE FACILITY	2026/03/26
2026/03391	METHOD FOR SYNTHESIZING GRAPHENE COMPOSITE MODIFIED NANO-CALCIUM CARBONATE	2026/03/26
2026/03392	INTELLIGENT DETECTION AND REPAIR DECISION METHOD AND SYSTEM FOR PIPELINE ROBOT	2026/03/26
2026/03415	ARTIFICIAL INTELLIGENCE ENGINE-OPTIMIZED POWER QUALITY MONITORING METHOD AND DEVICE THEREOF	2026/03/26
2026/03436	METHOD AND SYSTEM FOR ANALYZING SHAFTING VIBRATION CHARACTERISTICS BASED ON ELASTOHYDRODYNAMIC LUBRICATION	2026/03/27
2026/03438	DISPLAY AND CONTROL CONSOLE BASE CONVENIENT FOR DISASSEMBLY AND MAINTENANCE AND MOVABLE FOR TRANSPORTATION	2026/03/27
2026/03439	WATERPROOF AND EASILY REPLACEABLE DISPLAY AND CONTROL CONSOLE PANEL	2026/03/27
2026/03441	COMPUTER DESK WITH CONVENIENT STORAGE AND ADJUSTMENT	2026/03/27

Application Number	Patent Title	Filing Date
2026/03442	HIGH-TEMPERATURE-RESISTANT AND HIGH-CONDUCTIVITY STEEL FOR ANODE STEEL CLAW IN ELECTROLYTIC ALUMINUM AND PREPARATION METHOD THEREOF	2026/03/27
2026/03443	HIGH-CONDUCTIVITY STEEL FOR STEEL CLAW IN ELECTROLYTIC ALUMINUM AND PREPARATION METHOD THEREOF	2026/03/27
2026/03444	SAND-FIXING GREENING GRID	2026/03/27
2026/03445	A SYSTEM AND MECHANISM FOR VEHICLE IMPACT REDUCTION USING PRESSURIZED PISTON ACTUATION	2026/03/27
2026/03446	AN ASSEMBLED PIPELINE PRE-EMBEDDED STRUCTURE CONVENIENT FOR ON-SITE INSTALLATION	2026/03/27
2026/03447	A VERTICAL CONNECTION STRUCTURE OF PREFABRICATED SHEAR WALL CONVENIENT FOR CONSTRUCTION	2026/03/27
2026/03448	AN OFF-GRID COMBINED COOLING, HEATING, ELECTRICITY AND STORAGE SYSTEM	2026/03/27
2026/03451	SPIRAL DRIVE MECHANISM-BASED MANUALLY OPERATED GRASS TRIMMING MACHINE	2026/03/27
2026/03452	A METHOD AND SYSTEM FOR PRODUCING BIOHYDROGEN FROM WASTE ACTIVATED SLUDGE IN AN ENERGY-EFFICIENT MANNER	2026/03/27
2026/03455	CATALYST COMPOSITION FOR OLIGOMERIZATION AND A PROCESS FOR ITS PREPARATION	2026/03/27
2026/03456	WPT SYSTEM FOR REALIZING CONSTANT CURRENT AND CONSTANT VOLTAGE OUTPUT ON BASIS OF VARIABLE-STRUCTURE HYBRID TOPOLOGY	2026/03/27
2026/03477	CHANNEL STATE INFORMATION REPORTING PRIORITY FOR LOWER-LAYER TRIGGERED MOBILITY	2026/03/27
2026/03518	GROUND STRESS INVERSION METHOD FOR HIGH GEOTHERMAL TUNNELS BASED ON REFINED 3D GEOLOGICAL MODELS	2026/03/30
2026/03519	OPTIMIZATION METHOD FOR URBAN PUBLIC SERVICE FACILITY LAYOUT BASED ON LOW-CARBON GOALS	2026/03/30
2026/03522	BENEFICIATION METHOD FOR A URANIUM-IRON POLYMETALLIC PLACER	2026/03/30

Application Number	Patent Title	Filing Date
2026/03534	ENERGY-EFFICIENT DEVICE AND METHOD FOR WHEAT BREEDING AND SEED SELECTION	2026/03/30
2026/03562	AUXILIARY SYSTEM FOR INTERPRETING SEISMIC FREQUENCY RESONANCE EXPLORATION DATA	2026/03/31
2026/03563	LOW-SHRINKAGE CONCRETE AND PREPARATION METHOD THEREFOR	2026/03/31
2026/03569	A MEDIUM-DEEP HOLE STOPING MINING METHOD FOR A GENTLY INCLINED ORE BODY	2026/03/31
2026/03570	A DEEP-HOLE MINING METHOD FOR INCLINED MEDIUM-THICK FRACTURED ORE BODIES	2026/03/31
2026/03571	A DEEP INCLINED ROADWAY DEVELOPMENT VENTILATION METHOD	2026/03/31
2026/03575	AN EMC FLUID FILTER	2026/03/31
2026/03576	ANESTHETIC DRUG SPRAYING DEVICE FOR DEPARTMENT OF ANESTHESIOLOGY	2026/03/31
2026/03577	VISUAL LARYNGEAL MASK WITH ANESTHETIC SPRAYING DEVICE	2026/03/31
2026/03599	POLYPLOID INDUCTION BREEDING METHOD FOR DENDROBIUM OFFICINALE KIMURA ET MIGO	2026/04/01
2026/03600	A SYSTEM AND A METHOD FOR ADAPTIVE USER INTERACTION AND PERSONALIZATION IN SMART MEDIA PLATFORMS	2026/04/01
2026/03601	METHOD FOR CONSTRUCTING MACHINE LEARNING MODEL FOR RECOMMENDING AIRWAY OPENING POSTURE ANGLE	2026/04/01
2026/03602	CLOUD PLATFORM ARCHITECTURE-BASED DATA SERVICE SYSTEM FOR SOYBEAN REMOTE SENSING YIELD ESTIMATION	2026/04/01
2026/03603	INTELLIGENT MONITORING AND EARLY WARNING SYSTEM FOR NOSOCOMIAL INFECTION RISK	2026/04/01
2026/03605	AN INTEGRATED HIRING AND CANDIDATE EVALUATION SYSTEM WITH AI INTERVIEW AND MULTI-ROUND SCREENING CAPABILITIES	2026/04/01
2026/03606	AN INTEGRATED MINIATURE AUTOMATED PARKING SYSTEM WITH REAL-TIME SLOT DETECTION AND TIME-BASED BILLING	2026/04/01
2026/03607	A MULTI-SENSOR, ADAPTIVE, FAULT-TOLERANT AUTOMATED IRRIGATION SYSTEM WITH INTELLIGENT FARMER INTERFACE	2026/04/01

Application Number	Patent Title	Filing Date
2026/03608	A HYBRID SENSOR FUSION AND EMBEDDED INFERENCE FOR REAL-TIME SITTING POSTURE CLASSIFICATION	2026/04/01
2026/03609	AN INTELLIGENT PEST AND WILDLIFE MANAGEMENT SYSTEM WITH MULTI-SENSOR DETECTION AND ADAPTIVE DETERRENT RESPONSE	2026/04/01
2026/03610	AN INTELLIGENT CROP PREDICTION AND FARMING SUPPORT SYSTEM USING MACHINE LEARNING	2026/04/01
2026/03611	A SMART 3D PRINTING FILAMENT DEHYDRATOR AND STORAGE SYSTEM WITH AUTOMATED TEMPERATURE AND HUMIDITY CONTROL	2026/04/01
2026/03612	SMART FLOOR-CLEANING ROBOT WITH PREDICTIVE DIRT MAPPING	2026/04/01
2026/03613	A SMART WATER LEAKAGE DETECTION SYSTEM	2026/04/01
2026/03614	A GAS STOVE SYSTEM FOR AUTOMATED KITCHEN SAFETY	2026/04/01
2026/03645	THREE-DIMENSIONAL GEOLOGICAL MODELING METHOD FOR CONCEALED GOLD DEPOSITS BASED ON INTEGRATED AIRBORNE, SURFACE, AND BOREHOLE EXPLORATION DATA	2026/04/02
2026/03646	RUTHENIUM-RUTHENIUM DIOXIDE HETEROJUNCTION CATALYST AND APPLICATION IN HYDROGEN PRODUCTION VIA WATER ELECTROLYSIS	2026/04/02
2026/03648	SAFETY-TYPE DISCONNECTING ISOLATION CABINET	2026/04/02
2026/03650	PRIMER COMBINATION, KIT AND APPLICATION THEREOF FOR RAPID DETECTION OF KSHV	2026/04/02
2026/03653	DISCHARGING DEVICE FOR PREVENTING ELECTROSTATIC ADSORPTION OF FINE PARTICLES	2026/04/02
2026/03654	FLEXIBLE MATERIAL DOCKING DEVICE FOR INTELLIGENT PRODUCTION LINES	2026/04/02
2026/03688	RESEARCH METHOD FOR AN INFLUENCE OF RADIOACTIVE ELEMENTS ON MINERAL CRYSTAL STRUCTURES	2026/04/07
2026/03689	A SMART MULTI-SENSOR IOT SYSTEM FOR FOREST PROTECTION AND DEFORESTATION PREVENTION	2026/04/07
2026/03690	A BLIND TURN INDICATOR AND WARNING SYSTEM FOR HILLY AREAS	2026/04/07

Application Number	Patent Title	Filing Date
2026/03693	A METHOD FOR PREPARING BIOCHAR BASED ON EUCALYPTUS AND ITS APPLICATION	2026/04/07
2026/03694	APPLICATION OF GIANT SALAMANDER SMALL MOLECULAR PEPTIDE IN MANUFACTURING PRODUCT FOR TREATING ALCOHOLIC LIVER INJURY	2026/04/07
2026/03697	PERVIOUS RECYCLED AGGREGATE CONCRETE CONTAINING COMBINED ADDITIONS OF RECYCLED CARBON FIBERS AND RUBBER PARTICLES AND A METHOD FOR PREPARING THE SAME	2026/04/07
2026/03698	AN INTELLIGENT CONTROL SYSTEM AND METHOD FOR GYNECOLOGICAL EXAMINATION BED BASED ON MULTI-SENSOR FUSION	2026/04/07
2026/03699	METHOD AND SYSTEM FOR DETERMINING A FLOTATION COLLECTOR FOR URANIUM-CONTAINING ZIRCON	2026/04/07
2026/03701	A GARMENT SEWING MACHINE PROVIDED WITH CALIBRATION FUNCTION	2026/04/07
2026/03702	LUNG FUNCTION TESTER FOR CHILD HEALTH CARE	2026/04/07
2026/03709	METHOD AND SYSTEM FOR ADAPTIVE COMPLIANCE CONTROL OF ROBOT JOINTS BASED ON BIFURCATION POINTS OF TRAVELING WAVE SOLUTIONS	2026/04/07
2026/03710	SINGLE-WELL INJECTION-PRODUCTION METHOD FOR LOW-PERMEABILITY SANDSTONE-TYPE URANIUM ORE	2026/04/07
2026/03711	MACHINE LEARNING-BASED BUILDING ENERGY CONSUMPTION PREDICTION METHOD	2026/04/07
2026/03712	ERLENMEYER FLASK CLEANING MECHANISM	2026/04/07
2026/03713	A METHOD FOR INTELLIGENT OPTIMIZATION OF ROAD WAY BOLT SUPPORT PARAMETERS BASED ON MULTI-OBJECTIVE OPTIMIZATION AND MACHINE LEARNING	2026/04/07
2026/03716	PRESSURE CONTROL VALVE ASSEMBLY	2026/04/07
2026/03717	VACUUM BREAKER	2026/04/07
2026/03718	AN AUTOMATED FOGGER-BASED MICROCLIMATE SYSTEM TO MITIGATE HEAT STRESS IN BUFFALO	2026/04/07
2026/03719	ANALYSIS METHOD OF HUANGLIAN DECOCTION AGAINST COLON	2026/04/07

Application Number	Patent Title	Filing Date
	ADENOCARCINOMA BASED ON SINGLE-CELL ATLAS AND PHARMACOLOGY	
2026/03720	A SYSTEM AND METHOD FOR ADAPTIVE DC MOTOR PROTECTION AND ON-DEVICE PROGNOSTIC FAULT LOGGING	2026/04/07
2026/03721	AN AI-BASED FOCUS TRACKER LEARNABLE BAND FOR COGNITIVE STATE MONITORING AND LEARNING ENHANCEMENT	2026/04/07
2026/03722	AN INTEGRATED BLUETOOTH BASED ADAPTIVE GESTURE-CONTROLLED GAMING GLOVE	2026/04/07
2026/03723	AN AFFORDABLE SMART LOCKING SYSTEM FOR ENHANCED SECURITY	2026/04/07
2026/03724	AN IOT-ENABLED NAVIGATION CANE DEVICE WITH ADAPTIVE HAPTIC FEEDBACK FOR ENHANCED MOBILITY AND SAFETY OF BLIND USERS	2026/04/07
2026/03725	A UNIFIED DIGITAL VILLAGE SYSTEM FOR E-GOVERNANCE AND CITIZEN SERVICES	2026/04/07
2026/03726	A SYSTEM FOR DIFFUSION-CONTROLLED AESTHETIC QR CODE GENERATION USING TEXT-TO-IMAGE GUIDANCE	2026/04/07
2026/03727	A LORA-BASED SMART AGRICULTURE MONITORING AND AUTOMATED IRRIGATION SYSTEM	2026/04/07
2026/03728	A REAL-TIME VEHICLE ACCIDENT DETECTION AND ALERT SYSTEM USING 4G CONNECTIVITY	2026/04/07
2026/03729	A PHYSIOLOGICAL STRESS RESPONSIVE HARDWARE INTERLOCK SYSTEM FOR AUTOMATIC OPERATOR SAFETY CONTROL	2026/04/07
2026/03730	A NON-INVASIVE INTRAVENOUS AUTO-CUTOFF REGULATOR ASSEMBLY	2026/04/07
2026/03731	A FULL-BRIDGE ACTIVE RECTIFIER CIRCUIT USING LOW-RESISTANCE MOSFETS WITH IDEAL DIODE CONTROLLER	2026/04/07
2026/03732	A SYSTEM AND METHOD FOR REAL-TIME NEWS ARTICLE VERIFICATION USING LIGHTWEIGHT TEXT ANALYSIS AND IMAGE FORENSICS	2026/04/07
2026/03733	AN IOT-ENABLED REAL-TIME ARRHYTHMIA MONITORING SYSTEM USING HYBRID HLP-GAF FEATURE FUSION	2026/04/07

Application Number	Patent Title	Filing Date
2026/03734	AN AI-DRIVEN EMOTION-ADAPTIVE VR SYSTEM FOR RECRUITMENT AND EMPLOYEE TRAINING	2026/04/07
2026/03735	SCREEN PRINTING DEVICE FOR GLASS PASTE	2026/04/07
2026/03736	A WATER ELECTROLYSER SYSTEM AND METHOD FOR PRODUCING COMPRESSED HYDROGEN	2026/04/07
2026/03738	MENSTRUAL FLUID SAMPLING DEVICE	2026/04/07
2026/03742	PYRIPYROPENE DERIVATIVE, AND COMPOSITION AND USE THEREOF	2026/04/07
2026/03777	UV-ASSISTED SULFIDATION ARSENIC REMOVAL METHOD FOR COPPER SMELTING ARSENIC-CONTAINING WASTE ACID	2026/04/08
2026/03778	METHOD AND DEVICE FOR COMBINED PRODUCTION OF SMOKED SHEET RUBBER USING MULTIPLE HEAT SOURCES	2026/04/08
2026/03779	A MICROCHANNEL REACTION DEVICE FOR BIO-BASED DIMERS AND HYDROGENATED HIGH-PURITY DIMERS	2026/04/08
2026/03780	METHOD FOR CLASSIFYING VOLCANIC RESERVOIRS BASED ON MULTI-SOURCE DATA FUSION AND MACHINE LEARNING, AND SYSTEM	2026/04/08
2026/03781	A VOC GAS ACTIVATED CARBON PURIFICATION BOX	2026/04/08
2026/03782	AUDIO POWER AMPLIFIER TESTING SYSTEM BASED ON VIRTUAL INSTRUMENT TECHNOLOGY	2026/04/08
2026/03783	MICRONEEDLE AND MICRONEEDLE ARRAY APPARATUS	2026/04/08
2026/03784	VIRTUAL SIMULATION TRAINING PLATFORM	2026/04/08
2026/03787	A TOURIST SAFETY MONITORING AND INCIDENT RESPONSE SYSTEM BASED ON AI, GEO-FENCING, AND BLOCKCHAIN-BASED DIGITAL IDS	2026/04/08
2026/03788	A SECURE DATA WIPING SYSTEM FOR TRUSTWORTHY IT ASSET RECYCLING	2026/04/08
2026/03789	MULTI-CYCLE ROTATIONAL VERTICAL CULTIVATION SYSTEM AND METHOD FOR EDIBLE FUNGI	2026/04/08
2026/03790	A DISTRIBUTED EDGE-AWARE MLOPS SYSTEM FOR LIFECYCLE OPTIMIZATION OF MACHINE LEARNING MODELS	2026/04/08
2026/03791	AN AUTOMATED DIABETES PREDICTION SYSTEM	2026/04/08

Application Number	Patent Title	Filing Date
2026/03792	A SYSTEM FOR SECURE, PORTABLE AND RELIABLE DEPLOYMENT OF MACHINE LEARNING INFERENCE SERVICES VIA HARDENED ARTIFACT PATH RESOLUTION	2026/04/08
2026/03793	A DEEP LEARNING BASED AUTOMATED PLANT DISEASE DETECTION SYSTEM	2026/04/08
2026/03794	A SELF-LEARNING, REINFORCEMENT-BASED OPTIMIZATION SYSTEM FOR MACHINE LEARNING PIPELINES	2026/04/08
2026/03795	AN AUTOMATED MLOPS FRAMEWORK BASED SYSTEM FOR CONTINUOUS TRAINING, EVALUATION AND DEPLOYMENT OF DIABETES PREDICTION MODELS	2026/04/08
2026/03796	AN ML DRIVEN EMOTIONAL ANALYTICS SYSTEM FOR ENHANCING EMPLOYABILITY	2026/04/08
2026/03797	AN INTEGRATED SYSTEM FOR SECURE AGRICULTURAL CONTRACTING AND ESCROW-BASED PAYMENTS	2026/04/08
2026/03798	AN AI AND IOT-ENABLED AUTONOMOUS SMART TROLLEY SYSTEM FOR RETAIL AUTOMATION	2026/04/08
2026/03799	AN END-TO-END MLOPS-BASED DIAMOND PRICE PREDICTION SYSTEM USING ENSEMBLE REGRESSION AND AUTOMATED DEPLOYMENT FRAMEWORK	2026/04/08
2026/03800	A SYSTEM FOR UNIFIED MACHINE LEARNING MODEL MANAGEMENT AND EXPERIMENT TRACKING	2026/04/08
2026/03801	A MULTI AGENT FINANCIAL ANALYSIS SYSTEM WITH REPORT GENERATION AND INTERACTIVE VISUALIZATION	2026/04/08
2026/03804	PROCESS FOR PREPARTION OF TAGATOSE FROM BIOMASS	2026/04/08
2026/03806	GENE EXPRESSION CONTROL USING GUANIDINE BASED GENE INDUCTION	2026/04/08
2026/03834	DIVERSION-TYPE ANTI-HIGH-TEMPERATURE ANTI-COKING BOILER FURNACE BODY STRUCTURE	2026/04/09
2026/03836	FOLDING BED	2026/04/09
2026/03837	INTELLIGENT WATER AND FERTILIZER IRRIGATION SYSTEM AND IRRIGATION DEVICE THEREOF	2026/04/09
2026/03839	SEEDING AND FERTILIZING INTEGRATED DEVICE AND METHOD	2026/04/09
2026/03840	AI-BASED METHOD AND SYSTEM FOR HYDROGEOLOGICAL, ENGINEERING	2026/04/09

Application Number	Patent Title	Filing Date
	AND ENVIRONMENTAL GEOLOGICAL PROFILE ANALYSIS	
2026/03842	A METHOD AND DEVICE FOR SEPARATING RADAR TARGETS AND INTERFERENCE SIGNALS BASED ON POLARIZATION EXTENSION AND BLIND SEPARATION	2026/04/09
2026/03847	A SYSTEM FOR AUTOMATED VEHICLE CLASS VERIFICATION AT TOLL PLAZAS	2026/04/09
2026/03848	A FULL-STACK AI-ENABLED BAKERY ORDERING SYSTEM	2026/04/09
2026/03849	AN MQ-6 SENSOR AND ESP-01S MODULE BASED GAS LEAK DETECTION AND ALERT SYSTEM	2026/04/09
2026/03850	AN MLOPS-DRIVEN RETAIL SALES FORECASTING SYSTEM USING MLFLOW AND STREAMLIT	2026/04/09
2026/03851	AN AUTO-CONTAINERIZATION SYSTEM FOR MACHINE LEARNING MODELS	2026/04/09
2026/03852	A CLOUD-DEPLOYED AND MLOPS-MANAGED ENSEMBLE AI SYSTEM FOR HOSPITAL AND TELEMEDICINE INTEGRATION	2026/04/09
2026/03853	A FEDERATED LEARNING-BASED WILDLIFE MONITORING SYSTEM	2026/04/09
2026/03854	A COMPREHENSIVE SYSTEM OF MLOPS EMBEDDED WITH ZENML AND MLFLOW FOR END-TO-END MANAGEMENT AND DEPLOYMENT OF MACHINE LEARNING MODELS	2026/04/09
2026/03855	A ROBOTIC BEACH CLEANER SYSTEM FOR COASTAL WASTE MANAGEMENT	2026/04/09
2026/03856	AN IOT SENSORS AND MACHINE LEARNING BASED SYSTEM FOR REAL-TIME SOLAR ENERGY MONITORING AND PREDICTION	2026/04/09
2026/03857	A SYSTEM FOR AUTOMATED MODEL PERFORMANCE MONITORING AND INTELLIGENT RETRAINING IN MACHINE LEARNING OPERATIONS	2026/04/09
2026/03858	A SYSTEM FOR CONTAINERIZED MACHINE LEARNING LIFECYCLE AUTOMATION USING DOCKER AND MLFLOW	2026/04/09
2026/03881	RICE-AUSTRALIAN LOBSTER-RICEFIELD EEL INTEGRATED ECOLOGICAL PLANTING AND BREEDING METHOD IN PADDY FIELDS	2026/04/10
2026/03882	A LANDSCAPE MAINTENANCE DEVICE FOR GARDEN DESIGN	2026/04/10

Application Number	Patent Title	Filing Date
2026/03883	INTELLIGENT WATER AND FERTILIZER INTEGRATION DEVICE AND METHOD FOR AGRICULTURAL PLANTING	2026/04/10
2026/03884	PREFABRICATED SHEAR WALL CONNECTING STRUCTURE AND METHOD	2026/04/10
2026/03885	AUTOMATIC IRRIGATION SYSTEM FOR CROP AND CONTROL METHOD THEREOF	2026/04/10
2026/03886	ONLINE TEMPERATURE MONITORING SYSTEM FOR HIGH-VOLTAGE SIDE CONNECTION OF HIGH-VOLTAGE STATION SERVICE TRANSFORMER	2026/04/10
2026/03892	REFRIGERANT COMPOSITION AND USE THEREOF	2026/04/10
2026/03907	REAR CROSS MEMBER ASSEMBLY OF A REAR FRAME OF A VEHICLE AND A METHOD THEREOF	2026/04/10
2026/03951	METHOD AND SYSTEM FOR MATCHING CRIMINAL CASE ELEMENTS BASED ON LEGAL KNOWLEDGE GRAPH	2026/04/13
2026/03952	A FABRICATED DOUBLE-SIDED WALL HANGING PANEL STRUCTURE WITH THERMAL BREAK AND SOUND INSULATION FUNCTION	2026/04/13
2026/03953	IMMERSIVE INTERACTION SYSTEM FOR ARCHITECTURAL DESIGN BASED ON VIRTUAL REALITY TECHNOLOGY	2026/04/13
2026/03960	POLYMER CROSS-LINKED SAND-FIXING AGENT RESISTANT TO ULTRAVIOLET AGING AND ITS PREPARATION METHOD	2026/04/13
2026/03961	A VEHICLE-MOUNTED IOT SYSTEM FOR AUTOMATIC POTHOLE DETECTION AND ROAD QUALITY MAPPING	2026/04/13
2026/03962	A NON-INVASIVE INTELLIGENT DEVICE FOR PRECISE ANAEMIA DETECTION USING DEEP LEARNING AND MULTIMODAL DATA FUSION	2026/04/13
2026/03963	A SYSTEM FOR RAINWATER COLLECTION AND GROUNDWATER RECHARGE ASSESSMENT	2026/04/13
2026/03964	QUEST BASED GAMIFIED LEARNING SYSTEM	2026/04/13
2026/03965	A SMART OVERSPEEDING ALERT SYSTEM	2026/04/13
2026/03966	A FUZZY-NEURO ENVIRONMENTAL EQUILIBRIUM OPTIMIZER (FNEEO) SYSTEM FOR SMART URBAN CLIMATE REGULATION	2026/04/13

Application Number	Patent Title	Filing Date
2026/03967	A LOST OBJECT TRACKER THROUGH GPS MODULE	2026/04/13
2026/03968	A VEHICLE-TO-VEHICLE COMMUNICATION SYSTEM FOR ENHANCING ROAD SAFETY AND EFFICIENCY	2026/04/13
2026/03969	A SMART CABIN AIR QUALITY MONITORING AND CONTROL SYSTEM	2026/04/13
2026/03971	A RFID-BASED RECYCLE-REWARD SYSTEM USING ESP32 AND SD CARD LOGGING	2026/04/13
2026/03972	A SOFT COMPUTING-BASED SMART TRAFFIC SIGNAL CONTROL SYSTEM	2026/04/13
2026/03982	NEW FORMULATIONS OF PITOLISANT AND METHODS OF USE	2026/04/13
2026/04004	BENDING FORMING METHOD AND DEVICE FOR TITANIUM ALLOY TUBES	2026/04/14
2026/04006	LONG-LIFE LEAD-ACID BATTERY	2026/04/14
2026/04008	A NUMERICAL CONTROL MACHINE TOOL DEBURRING CONTROL METHOD BASED ON INTELLIGENT ALGORITHM	2026/04/14
2026/04067	METHOD FOR PREPARING NANOPLASMONIC METASURFACE BIOSENSOR AND APPLICATION THEREOF IN DETECTING NEW PSYCHOACTIVE SUBSTANCES	2026/04/15
2026/04068	STRAIN OF WOLFIPORIA COCOS YX3, CULTURE MEDIUM THEREOF, USE AND CULTIVATION METHOD THEREOF	2026/04/15
2026/04069	USE OF LIGNIN MONOMER AND CULTURE MEDIUM FOR PRESERVATION OF WOLFIPORIA COCOS STRAIN	2026/04/15
2026/04071	LARGE-ANGLE BENDING PIPELINE ROBOT	2026/04/15
2026/04072	STRAIN OF WOLFIPORIA COCOS YX2, CULTURE MEDIUM THEREOF, USE AND CULTIVATION METHOD THEREOF	2026/04/15
2026/04073	A CRACK-RESISTANT AND EXPLOSION-RESISTANT RESIN GRINDING WHEEL	2026/04/15
2026/04074	GASTRIC ENDOSCOPE DEVICE	2026/04/15
2026/04075	SMART ELECTRIC ENERGY DISTRIBUTION SYSTEM	2026/04/15
2026/04076	TEA PLUCKING DEVICE	2026/04/15
2026/04125	VENTILATION DEVICE FOR COAL MINE EXCAVATION WORKING FACE	2026/04/16
2026/04126	BILINGUAL LANGUAGE PROFICIENCY ASSESSMENT METHOD, SYSTEM, DEVICE, AND MEDIUM	2026/04/16

Application Number	Patent Title	Filing Date
2026/04127	WAVEGUIDE/SCATTERING MODE DISCRIMINATION METHOD BASED ON EVAPORATION DUCT HEIGHT	2026/04/16
2026/04129	AN IOT-ENABLED MULTI-SENSOR GAS LEAK DETECTION SYSTEM	2026/04/16
2026/04130	A CLOUD CONNECTED MULTI SENSOR PREDICTIVE MAINTENANCE SYSTEM FOR DC MOTORS	2026/04/16
2026/04131	A SYSTEM FOR INTEGRATED FINGERPRINT-BASED BLOOD GROUP DETERMINATION AND REAL-TIME MULTI-PARAMETER PHYSIOLOGICAL MONITORING	2026/04/16
2026/04132	A HYBRID MATHEMATICAL ANIMATION SYSTEM USING PROPERTY-BASED OBJECT IDENTIFICATION AND REAL-TIME SYNCHRONIZATION	2026/04/16
2026/04133	AN INTELLIGENT SYSTEM FOR CROSS-DOCUMENT LEGAL ANALYSIS USING HYBRID RAG	2026/04/16
2026/04134	A CT-TO-MRI BRAIN SCAN GENERATION SYSTEM	2026/04/16
2026/04135	A SYSTEM FOR AUTOMATED EVOLUTIONARY OPTIMIZATION OF HIERARCHICAL PROMPTS FOR LANGUAGE MODELS	2026/04/16
2026/04136	AN AI ENABLED CONTEXT SPECIFIC CONTRACT MANAGEMENT SYSTEM	2026/04/16
2026/04138	AN INTELLIGENT AND AUTOMATED ASSESSMENT SYSTEM FOR SUSTAINABLE TEACHING AND LEARNING	2026/04/16
2026/04139	A GEOSPATIAL WILDLIFE MONITORING AND AUTOMATED ALERT SYSTEM	2026/04/16
2026/04140	A MULTI-MODAL ROBOTIC SOLDERING SYSTEM WITH ADAPTIVE CONTROL INTERFACE	2026/04/16
2026/04272	WINDOW BLIND HEADRAIL WITH AN EXTRUDED POLYMERIC BODY	2026/04/20
2026/04328	MECHANO-CHEMICAL ACTIVATION OF MINERAL MATERIALS	2026/04/21
2026/04400	DEVICE AND METHOD FOR A TEMPERATURE-OPTIMIZED MECHANOCHEMICAL ACTIVATION	2026/04/22
2026/04601	METHOD FOR CONTROLLING CIRCULATING WATER SYSTEM OF NUCLEAR POWER PLANT	2026/04/29
2026/05669	SILOS AND PLANTS FOR THE PRODUCTION OF CONCRETE	2026/05/27
2026/05978	INITIATING SMALL DATA TRANSMISSION BASED ON ONE OR	2026/06/04

Application Number	Patent Title	Filing Date
	MORE CONDITIONS SPECIFIC TO DEVICE TYPE	
2026/06578	SECURE READ-ONLY AUTHENTICATION FOR BANK ACCOUNT INSPECTION	2026/06/24
2026/06723	IMPROVED PATCHES AND METHODS FOR DELIVERING AN ACTIVE SUBSTANCE TO THE SKIN USING THE SAME	2026/06/29
2026/08212	COMPOUNDS AND COMPOSITIONS AND USES THEREOF	2026/08/14
2026/08668	PERSONNEL MONITORING DEVICE AND SYSTEM	2026/09/01
2026/09215	STATION TRANSITION CANCELLATION	2026/09/18
2026/09230	A POWDER METALLURGY EQUIPMENT	2026/09/21
2026/09363	HEXABENZOCORONENE-BASED METAL ORGANIC FRAMEWORK CAPABLE OF DIRECTED MODIFICATION, PREPARATION METHOD THEREFOR AND USE THEREOF	2026/09/25
2026/09478	METHOD FOR IMPROVING PLANT ROOT REGENERATION CAPACITY AND APPLICATION THEREOF	2026/09/30
2026/09742	FEEDING MECHANISM AND PIPE FEEDING DEVICE	2026/10/08
2026/09809	HIGH-PERFORMANCE MULTIFUNCTIONAL CABLE AND PREPARATION METHOD THEREOF	2026/10/12
2026/09810	SEGMENTED VESSEL SPEED MEASUREMENT METHOD SUITABLE FOR ARC-SHAPED NAVIGATION TUNNEL	2026/10/12
2026/09901	FREQUENCY REGULATION SWITCHING METHOD, DEVICE, APPARATUS AND SYSTEM FOR HYBRID ENERGY STORAGE	2026/10/14
2026/10163	AUTOMATED ASSEMBLY PRODUCTION LINE FOR AN ELECTRIC MOTOR	2026/10/22
2026/10830	TRANSACTION FACILITATION SYSTEM AND METHOD	2026/11/09

DESIGNS

Advertisement List for November 2026

Number of Advertised Designs: 119

Application Number	Design Articles	Filing Date
A2019/00811	ORAL CARE IMPLEMENTS	2019/06/12
A2019/00855	CONTAINERS	2019/06/20
A2020/00187	LIQUID INTAKES	2020/02/13
A2020/00194	ORAL CARE IMPLEMENTS	2020/02/14
A2020/00274	PUMPS	2020/02/28
A2020/00397	PUMPS	2020/03/23
A2024/01393	TELEVISIONS	2024/12/23
A2025/00566	BOXES	2025/05/20
A2025/00916	A GARMENT	2025/08/04
A2025/01039	DISPLAY SCREENS OR PORTIONS THEREOF WITH GRAPHICAL USER INTERFACES	2025/08/25
A2025/01125	HANDHELD-DRILL HOLSTER	2025/09/10
A2025/01184	AUTOMOBILES	2025/10/01
A2025/01227	AUTOMOBILES	2025/10/17
A2025/01228	AUTOMOBILES	2025/10/17
A2025/01229	AUTOMOBILES	2025/10/17
A2025/01495	DEVICE FOR APPLYING COSMETICS	2025/12/09
A2026/00050	SPRING MATTRESS	2026/01/21
A2026/00090	Watch Dial	2026/02/02
A2026/00091	VIDEO CAMERAS	2026/02/03
A2026/00092	VIDEO CAMERAS	2026/02/03
A2026/00093	VIDEO CAMERAS	2026/02/03
A2026/00094	VIDEO CAMERAS	2026/02/03
A2026/00095	Beverage Dispensers	2026/02/03
A2026/00107	Container for a Beverage or the Like	2026/02/06
A2026/00108	Container for a Beverage or the Like	2026/02/06
A2026/00109	Container for a Beverage or the Like	2026/02/06
A2026/00111	Biometric Console	2026/02/09
A2026/00112	Biometric Console	2026/02/09
A2026/00113	MATTRESSES AND MATTRESS SUPPORTS	2026/02/09
A2026/00124	HANDBAG	2026/02/11
A2026/00125	CLASP	2026/02/11
A2026/00129	FISHING TOOL	2026/02/12
A2026/00133	Fastening Holder for Cables	2026/02/12
A2026/00157	Construction members	2026/02/18
A2026/00164	AUTOMOBILES	2026/02/20
A2026/00166	BIOPRINTING BODY MODULE	2026/02/20
A2026/00167	BIOPRINTING BODY MODULE	2026/02/20
A2026/00169	WATCHES	2026/02/23
A2026/00170	ADJUSTABLE STYLING BAR	2026/02/23
A2026/00171	AUTOMOBILES	2026/02/24
A2026/00174	Lanyard	2026/02/24
A2026/00178	HAIRDRYERS	2026/02/25
A2026/00179	CURL DIFFUSERS	2026/02/25
A2026/00181	Wearable Continuous Alcohol Monitoring Device	2026/02/25
A2026/00182	Wearable Continuous Alcohol Monitoring Device	2026/02/25

Application Number	Design Articles	Filing Date
A2026/00183	Wearable Continuous Alcohol Monitoring Device	2026/02/25
A2026/00186	GOLF BALL MARKING TOOLS	2026/02/26
A2026/00187	CAN ENDS	2026/02/26
A2026/00188	CAN ENDS	2026/02/26
A2026/00189	Earphone	2026/02/26
A2026/00190	Case for Earphones	2026/02/26
A2026/00191	Case for an Electronic Device	2026/02/26
A2026/00192	Case for an Electronic Device	2026/02/26
A2026/00211	SADDLEBAG DRAWER	2026/02/27
A2026/00217	COSMETIC CONTAINER	2026/03/03
A2026/00218	COSMETIC CONTAINER	2026/03/03
A2026/00219	COSMETIC CONTAINER	2026/03/03
A2026/00220	COSMETIC CONTAINER	2026/03/03
A2026/00224	FENCE CAP	2026/03/04
A2026/00258	ELECTRONIC CIGARETTE	2026/03/17
A2026/00259	ELECTRONIC CIGARETTE	2026/03/17
A2026/00260	ELECTRONIC CIGARETTE BODY	2026/03/17
A2026/00261	ELECTRONIC CIGARETTE	2026/03/17
A2026/00262	ELECTRONIC CIGARETTE BODY	2026/03/17
A2026/00263	CONSUMABLE FOR ELECTRONIC CIGARETTES, IN PARTICULAR A POD FOR AN ELECTRONIC CIGARETTE	2026/03/17
A2026/00264	CONSUMABLE FOR ELECTRONIC CIGARETTES, IN PARTICULAR A POD FOR AN ELECTRONIC CIGARETTE	2026/03/17
A2026/00265	ELECTRONIC CIGARETTE BODY	2026/03/17
A2026/00266	CONSUMABLE FOR ELECTRONIC CIGARETTES, IN PARTICULAR A POD FOR AN ELECTRONIC CIGARETTE	2026/03/17
A2026/00267	CONSUMABLE FOR ELECTRONIC CIGARETTES, IN PARTICULAR A POD FOR AN ELECTRONIC CIGARETTE	2026/03/17
A2026/00291	AIRWAY DEVICE	2026/03/18
A2026/00292	AIRWAY DEVICE	2026/03/18
A2026/00293	AIRWAY DEVICE	2026/03/18
A2026/00294	AIRWAY DEVICE	2026/03/18
A2026/00295	AIRWAY DEVICE	2026/03/18
A2026/00296	AIRWAY DEVICE	2026/03/18
A2026/00297	AIRWAY DEVICE	2026/03/18
A2026/00298	AIRWAY DEVICE	2026/03/18
A2026/00300	AIRWAY DEVICE	2026/03/18
A2026/00301	AIRWAY DEVICE	2026/03/18
A2026/00302	AIRWAY DEVICE	2026/03/18
A2026/00303	AIRWAY DEVICE	2026/03/18
A2026/00304	AIRWAY DEVICE	2026/03/18
A2026/00305	AIRWAY DEVICE	2026/03/18

Application Number	Design Articles	Filing Date
A2026/00333	BOTTLE	2026/03/26
A2026/00334	TOTTLE	2026/03/26
A2026/00335	BOTTLE	2026/03/26
A2026/00347	LIGHTSHADE	2026/03/31
A2026/00348	LIGHTSHADE	2026/03/31
A2026/00355	CLAMPS [TOOLS]	2026/04/02
A2026/00356	CLAMPS [TOOLS]	2026/04/02
A2026/00357	CLAMPS [TOOLS]	2026/04/02
A2026/00447	VEHICLE RACK	2026/04/24
A2026/00449	COMPONENT OF A VEHICLE RACK	2026/04/24
A2026/01112	ELECTRIC COOKING POT	2026/09/21
F2020/00186	LIQUID INTAKES	2020/02/13
F2022/01390	FLUID DISTRIBUTION DEVICE	2022/11/04
F2025/00842	FENCE PANEL	2025/07/16
F2025/00843	FENCE PANEL	2025/07/16
F2025/01122	HANDHELD-DRILL HOLSTER	2025/09/10
F2025/01218	SOLAR CELL PHONE CASE	2025/10/09
F2025/01431	DEBULKING TRAILERS	2025/11/26
F2026/00116	ELECTRICAL CABLE RETENTION DEVICE	2026/02/10
F2026/00130	FISHING TOOL	2026/02/12
F2026/00158	Construction members	2026/02/18
F2026/00160	FLOW CONDITIONER	2026/02/18
F2026/00165	BIOPRINTING BODY MODULE	2026/02/20
F2026/00168	BIOPRINTING BODY MODULE	2026/02/20
F2026/00214	SADDLEBAG DRAWER	2026/02/27
F2026/00225	FENCE CAP	2026/03/04
F2026/00226	FENCE CAP	2026/03/04
F2026/00251	SPORTS CAP	2026/03/13
F2026/00256	PORTABLE STONE DUSTER MACHINE	2026/03/17
F2026/00328	AERIAL BARRIER	2026/03/24
F2026/00344	DENTAL APPLIANCE	2026/03/31
F2026/00408	QR CODE FOR ATTACHMENT TO PERSONAL ITEMS FOR IDENTIFYING A USER	2026/04/14
F2026/00433	SOLAR MOUNTING MINI RAIL FOR IBR ROOF SHEETING	2026/04/21
F2026/00440	CELL PHONE POUCH	2026/03/16
F2026/00448	VEHICLE RACK	2026/04/24
F2026/00450	COMPONENT OF A VEHICLE RACK	2026/04/24

OTHER OFFICE NOTICES

Companies and Intellectual Property Commission
a member of the dtic group

N O T I C E

COMPANIES AND INTELLECTUAL PROPERTY COMMISSION (CIPC)

Taking into consideration that CIPC official office days are Mondays to Fridays and does not include weekends or public holidays, notice is hereby given in terms of and for purposes of the Acts mentioned in the Schedule below, that CIPC will be closed to the public on **Friday 4 December 2026.**

The CIPC Offices at –
a) the Department of Trade, Industry and Competition (the dtic) (77 Meintjies Street, Block F – Entfutfukweni) in Sunnyside, Pretoria;
b) Sancardia Building, 541 Madiba Street, Arcadia, Pretoria;
c) Bathopele Building, 91 Commissioner Street, Johannesburg;
d) Norton Rose House No 8, Shop Number 3, Riebeek Street, Thibault Square, Cape Town; and
e) CIPC Kiosk in Pavilion Shopping Centre in Jack Martens Drive in Westville,
will re-open at 08h00 on Monday 7 December 2026.

The lodgment of documents and services of legal documents will be accepted on Thursday 3 December 2026 until 15h30.

The day of Friday 4 December 2026 will be regarded as *dies non* for purposes of the stated Acts.

CIPC offers different lodgment / filing methods for certain services to its customers. During this period, services processed by automated means will continue to be processed while those services which require back-office intervention / finalisation e.g. services which require scanned documents to be e-mailed to dedicated e-mail addresses or uploaded via electronic platforms e.g. New E-Services, will only resume from Monday 7 December 2026.

Please also take note that with regards to name reservations, all reserved names that would have lapsed on Friday 4 December 2026, will now have their reservation dates moved forward to Monday 7 December 2026 and will, therefore, only elapse on that date.

SCHEDULE

Trade Marks Act, 1993
Patents Act, 1978
Design Act, 1993
Copyright Act, 1978
Companies Act, 2008
Close Corporations Act, 1984
Co-operatives Act, 2005
Registration of Copyright in Cinematograph Film Act, 1977

Kind regards.

Rory Voller
Signed by Rory Voller, RVoller@cipc.co.za
05/11/2026 08:35:52(UTC+02:00) SIGNIFLOW

Rory Voller
Commissioner: CIPC

The dtic Campus (Block F - Entfutfukweni), 77 Meintjies Street, Sunnyside, Pretoria
P.O. Box 429, Pretoria, 0001
Call Centre: 086 100 2472 | +27 87 743 7000 (International)
Website: www.cipc.co.za
@CIPC - Companies and Intellectual Property Commission @theCIPC YouTube @theCIPC

Companies and Intellectual Property Commission
a member of the dtic group

N O T I C E

COMPANIES AND INTELLECTUAL PROPERTY COMMISSION (CIPC)

Taking into consideration that CIPC official office days are Mondays to Fridays and does not include weekends or public holidays, notice is hereby given in terms of and for purposes of the Acts mentioned in the Schedule below, that CIPC will be closed to the public from **10h00 on Thursday 24 December 2026 and will re-open on Monday 4 January 2027.**

The CIPC Offices at –
a) the Department of Trade, Industry and Competition (the dtic) (77 Meintjies Street, Block F – Entfutfukweni) in Sunnyside, Pretoria;
b) Sancardia Building, 541 Madiba Street, Arcadia, Pretoria;
c) Bathopele Building, 91 Commissioner Street, Johannesburg;
d) Norton Rose House No 8, Shop Number 3, Riebeek Street, Thibault Square, Cape Town; and
e) CIPC Kiosk in Pavilion Shopping Centre in Jack Martens Drive in Westville;
Note: CIPC intends to move from Pavillion Shopping Mall to 214 Dr Pixley Kaseme Street in Durban within the next few months.
will re-open at 08h00 on Monday 4 January 2027.

The lodgment of documents and services of legal documents will be accepted on Wednesday 23 December 2026 until 15h30.

The days from Thursday 24 December 2026 up to and including Friday 1 January 2027 will be regarded as *dies non* for purposes of the stated Acts.

CIPC offers different lodgment / filing methods for certain services to its customers. During this period, services processed by automated means will continue to be processed while those services which require back-office intervention / finalisation e.g. services which require scanned documents to be e-mailed to dedicated e-mail addresses or uploaded via electronic platforms e.g. New E-Services, will only resume from Monday 4 January 2027.

Please also take note that with regards to name reservations, all reserved names that would have lapsed between Thursday 24 December 2026 up to and including Friday 1 January 2027, will now have their reservation dates moved forward to Monday 4 January 2027and will, therefore, only elapse on that date.

SCHEDULE

Trade Marks Act, 1993
Patents Act, 1978
Design Act, 1993
Copyright Act, 1978
Companies Act, 2008
Close Corporations Act, 1984
Co-operatives Act, 2005
Registration of Copyright in Cinematograph Film Act, 1977

Kind regards.

Rory Voller
Signed by Rory Voller, RVoller@cipc.co.za
17/09/2026 14:10:29(UTC+02:00) SIGNIFLOW

Rory Voller
Commissioner: CIPC

The dtic Campus (Block F - Entfutfukweni), 77 Meintjies Street, Sunnyside, Pretoria
P.O. Box 429, Pretoria, 0001
Call Centre: 086 100 2472 | +27 87 743 7000 (International)
Website: www.cipc.co.za
@CIPC - Companies and Intellectual Property Commission @theCIPC YouTube @theCIPC