PATENT JOURNAL

INCLUDING TRADE MARKS, DESIGNS AND COPYRIGHT IN CINEMATOGRAPH FILMS

MAY 2023 VOL 56 • No. 05

Companies and Intellectual Property Commission

a member of the dtic group

Part II of II

ISSUED MONTHLY DATE OF ISSUE: 31 MAY 2023

ISSN 2223-4837

PATENT JOURNAL

INCLUDING TRADE MARKS, DESIGNS AND COPYRIGHT IN CINEMATOGRAPH FILMS

VOL. 56 No. 05 **Date of Issue: 31 MAY 2023**

PATENTS, TRADE MARKS, DESIGNS AND COPYRIGHT OFFICE

Official notices of proceedings under:

The Patents Act, 1978
The Designs Act, 1993
The Trade Marks Act, 1963
The Trade Marks Act, 1993
The Registration of Copyright in Cinematograph Films Act, 1977

Registrar of Patents, Trade Marks, Designs and Copyright

Note: CIPC acting on behalf of the Government of the Republic of South Africa, cannot guarantee the accuracy of its publications or undertake any responsibility for errors or omissions or their consequences.

2. PATENTS 4
APPLICATIONS FOR PATENTS 5
ASSIGNMENTS IN TERMS OF SECTION 60-REGULATIONS 58-60 AND 64 (1) 110
CHANGE OF NAME IN TERMS OF REGULATION 39 112
PATENT LICENSES IN TERMS OF SECTION 60-REGULATIONS 58-60 AND 64 114
PATENT APPLICATIONS ABANDONED OR WITHDRAWN 115
APPLICATION FOR THE RESTORATION OF A LAPSED PATENT UNDER SECTION 47 OF THE ACT 115
VOLUNTARY SURRENDER OF A PATENT UNDER SECTION 64 (1), REGULATION 67 OF THE ACT 116
APPLICATIONS TO AMEND SPECIFICATION 116
INSPECTION OF SPECIFICATIONS 117
HYPOTHECATIONS 728
JUDGMENTS 728
OFFICE PRACTISE NOTICES 728
3. DESIGNS 729
APPLICATIONS FOR REGISTRATION OF DESIGNS IN TERMS OF ACT No. 195 OF 1993 730
CHANGE OF NAME IN TERMS OF REGULATION 24 735
APPLICATION FOR THE RESTORATION OF A LAPSED DESIGN UNDER SECTION 23 OF THE ACT 735
APPLICATION TO CORRECT AND/OR AMEND DESIGNS APPLICATION OR REGISTRATION 735
NOTICE OF REGISTRATION OF DESIGNS 735
HYPOTHECATIONS 794
JUDGMENTS 794
OFFICE PRACTISE NOTICES 794
4. COPYRIGHT 795
NOTICES OF ACCEPTANCE 796
HYPOTHECATIONS 797
JUDGMENTS 797
OFFICE PRACTISE NOTICES 797
5. CORRECTION NOTICES 798
TRADE MARK CORRECTION NOTICES 799
PATENT CORRECTION NOTICES 801
DESIGNS CORRECTION NOTICES 803
COPYRIGHT CORRECTION NOTICES 803
PATENTS 804
DESIGNS 867

2. PATENTS

PATENTS

APPLICATIONS FOR PATENTS

Copies of these specifications cannot be supplied until the applications have been accepted and advertised, or in the case of convention applications, until 18 months from the date of the application in the convention

THE PARTICULARS APPEAR IN THE FOLLOWING SEQUENCE:

The numerical references denote the following: (21) Number of application. (22) Date of application. (DA) Date of acceptance. (51) Class. (71) Name of applicant(s). (72) Name of all inventors. (33) Country. (31) Number and (32) Date of convention application. (54) Title of invention. (00) Number of sheets.

. - APPLIED ON 2023/04/24 -

2023/04724 ~ Complete ~54:SUBMERGED COMBUSTION MELTING EXHAUST SYSTEMS ~71:Owens-Brockway Glass Container Inc., One Michael Owens Way, PERRYSBURG 43551, OH, USA, United States of America ~72: GOBRECHT III, Richard C.;KUHLMAN, Robert W.;RASHLEY, Shane T.;SHI, Liming;THOMAS, William~ 33:US ~31:63/085,646 ~32:30/09/2020

2023/04731 ~ Complete ~54:A DRIVE DEVICE FOR ROTATABLE OPERATION OF A DRILL BIT OF A DOWN-THE-HOLE HAMMER ~71:LKAB WASSARA AB, P.O Box 1067, 141 22, Huddinge, Sweden ~72: FREKRIK EGERSTRÖM;MAGNUS FRIDSELL;MAGNUS HÖRMAN;MARTIN ÖHNSTRÖM~ 33:SE ~31:2051146-5 ~32:01/10/2020

2023/04661 ~ Provisional ~54:HYDROGEN FUEL FOR HIGH PERFORMANCE STAGE THREE FOR SUPERSONIC SPEEDS BUSINESS PRIVATE JET TURBOFAN-RAMJET ENGINE ~71:Ahmed Waseef Saib, 24 Park Avenue, Desainagar, South Africa ~72: Ahmed Waseef Saib~

2023/04677 ~ Complete ~54:SEAWATER FRY REARING APPARATUS ~71:XU, Wenwen, No. 4, Fuqian Road, Rushan, Weihai City, Shandong Province, 264500, People's Republic of China ~72: XU, Wenwen~

2023/04701 ~ Complete ~54:METHOD FOR ESTIMATING A PAYLOAD OF A HYDRAULIC MINING SHOVEL ~71:CATERPILLAR GLOBAL MINING LLC, 875 W. Cushing Street, United States of America ~72: CESARZ, Arthur;CUGATI, Sharath;KUNIGK, Martin~ 33:GB ~31:2017656.6 ~32:09/11/2020

2023/04727 ~ Complete ~54:COMPOSITIONS FOR IMPROVED DELIVERY OF CGRP INHIBITORS ~71:Pfizer Ireland Pharmaceuticals, Operations Support Group, RINGASKIDDY, CORK, IRELAND, Ireland ~72: CONWAY, Charles M.;DUBOWCHIK, Gene M.;KUMAR, Rajesh~ 33:US ~31:63/115,789 ~32:19/11/2020;33:US ~31:63/126,550 ~32:17/12/2020

2023/04732 ~ Complete ~54:LIPOPEPTIDE FUSION INHIBITORS AS SARS-COV-2 ANTIVIRALS ~71:ERASMUS UNIVERSITY MEDICAL CENTER, P.O. Box 2040 3000 CA Rotterdam, Netherlands;INSERM, 101 rue de Tolbiac, F-75654, Paris, France;THE TRUSTEES OF COLUMBIA UNIVERSITY IN THE CITY OF NEW YORK, 412 Low Memorial Library 535 West 116th Street, New York, New York, 10027, United States of America ~72: ANNE MOSCONA;BRANKA HORVAT;CYRILLE MATHIEU;MATTEO POROTTO;RIK DE SWART;RORY DE VRIES~ 33:US ~31:63/091,915 ~32:14/10/2020;33:US ~31:63/107,429 ~32:29/10/2020;33:US ~31:63/139,302 ~32:19/01/2021;33:US ~31:63/139,306 ~32:19/01/2021;33:US ~31:63/144,606 ~32:02/02/2021;33:US ~31:63/145,453 ~32:03/02/2021

2023/04738 ~ Provisional ~54:LOTTO REGISTRATIONS FOR PAYMENTS VIA BLUETOOTH ON CELLPHONE SCREEN (APP) ~71:GEORGE MAKHAYA MASOMBUKA, 1707 ALLEMANSDRIFT, BUTHI, SIYABUSWA, South Africa ~72: GEORGE MAKHAYA MASOMBUKA~

2023/04681 ~ Complete ~54:FORMULA OF QUICK-FERMENTED HARMLESS AND ODORLESS BIOLOGICAL FERTILIZER, PREPARATION METHOD AND EFFECTS THEREOF ~71:Jiangmen Geili Biology Science and Technology Co., Ltd, Room 230, Floor 2, No.12 Gongye Road, West Zone, Pengjiang District, Jiangmen City, Guangdong Province, People's Republic of China ~72: ZHANG Jun;ZHANG Liang;ZHANG Yibin~

2023/04684 ~ Complete ~54:A METHOD FOR ANALYSING MEDIATING ROLE OF REWARD IN JOB SATISFACTION AND MOTIVATING EMPLOYEES PERFORMANCE ~71:Bijita Saikia, Assistant Professor, Centre for Management Studies, Dibrugarh University, Dibrugarh, Assam, 786004., India;Dr. Aradhana Borthakur, Assistant Professor, Centre for Management Studies, Dibrugarh University, Dibrugarh, Assam, 786004, India;Dr. Debyani Roy Bhowmick, Assistant Professor, Department of Commerce, Women's College, Tinsukia, Assam, 786125, India;Dr. Monika Bisht, Assistant Professor, Department of Management, Birla Institute of Technology (Mesra), Ranchi - Off Campus Noida, Uttar Pradesh, 201301., India;Dr. Murchana Gogoi, Assistant Professor, Department of Commerce, Digboi College, Tinsukia, Itavata, Assam, 786171, India;Dr. Subhadeep Chakraborty, Assistant Professor, Department of Commerce, Digboi College, Tinsukia, Itavata, Assam, 786171, India;Dr. Veena Grover, Professor, Department of Management, Noida Institute of Engineering & Technology, 19, Knowledge Park-II, Institutional Area, Greater Noida, Uttar Pradesh, 201306., India;Ritu Singh, Assistant Professor, Department of Commerce, Tinsukia Commerce College, Tinsukia, Assam, 786145, India ~72: Bijita Saikia;Dr. Aradhana Borthakur;Dr. Debyani Roy Bhowmick;Dr. Monika Bisht;Dr. Murchana Gogoi;Dr. Subhadeep Chakraborty;Dr. Veena Grover;Ritu Singh~

2023/04688 ~ Complete ~54:METHOD FOR MOUNTING AND CONTROLLING CABLE-MEMBRANE STRUCTURE ~71:China Railway Construction Corporation (International) Limited, Part of the 1st floor, 2nd-4th Floor and 7th Floor, China Railway Construction Scientific Research Building, No. 40 Fuxing Road, Haidian District, Beijing, 100039, People's Republic of China ~72: Huang Taorui;Li Bai;Liu Dawei;Ma Gaofeng;Shen Jiayong;Tang Xinquan;Wang Lei;Yang Wei;Yuan Chao;Zhang Jian;Zheng Tianli~ 33:CN ~31:202210848495.8 ~32:19/07/2022

2023/04693 ~ Complete ~54:THE BLADE VEIN CHANNEL BIONIC AIR-COOLED FUEL CELL WITH PULMONARY INTAKE AND ITS METHOD ~71:Jilin University, No. 2699, Qianjin Street, Changchun City, Jilin Province, 130012, People's Republic of China ~72: CUI Ruoyu;DAI Yina;JIANG Shishen;LIU Zhenning;LU Guolong;WANG Mi~ 33:CN ~31:202210733365.X ~32:27/06/2022

2023/04700 ~ Complete ~54:METHOD FOR THE HEAVY METAL POLLUTION PREVENTION AND CONTROL TECHNOLOGY INTEGRATION APPLIED IN HISTORICAL LEAD-ZINC SMELTING SLAG DISPOSAL SITE AND AFFECTED AREAS ~71:BGRIMM TECHNOLOGY GROUP, Building 23, Zone 18 of ABP, No. 188, South 4th Ring Road West, Beijing, People's Republic of China;China University of Geosciences(Bei Jing), No.29, Xueyuan Road, Haidian District, Beijing, People's Republic of China;Southwest University of Science and Technology, 59 Qinglong Road, Fucheng district, Mianyang, Sichuan, 621010, People's Republic of China;University of Science and Technology Beijing, 30 Xueyuan Road, Haidian District, Beijing, People's Republic of China ~72: Cui Wei Hua;Fu Kai Bin;Jiang Hui;Lin Xing Jie;Wang Zhe;Wu Liang Liang;Yang Hui Fen;Yao Jun;Zhang Hua~ 33:CN ~31:202310259205.0 ~32:17/03/2023

2023/04705 ~ Complete ~54:GROUND ENGAGING TOOL WEAR AND LOSS DETECTION SYSTEM AND METHOD ~71:CATERPILLAR INC., 100 NE Adams Street, United States of America ~72: PETRANY, Peter, Joseph;RAM, Shastri~ 33:US ~31:17/086,081 ~32:30/10/2020

2023/04711 ~ Complete ~54:INDUSTRIAL CALCINATION APPARATUS ~71:SAINT-GOBAIN PLACO, Tour Saint-Gobain 12 place de l'Iris, France ~72: KANCHARLAPALLI, Siva;PATEL, Manish;SUTTON, Peter;TRAN, Binh;WOOLLACOTT, Rob~ 33:EP ~31:21305066.9 ~32:20/01/2021

2023/04718 ~ Complete ~54:AEROSOL-GENERATING MATERIAL ~71:Nicoventures Trading Limited, Globe House, 1 Water Street, LONDON WC2R 3LA, UNITED KINGDOM, United Kingdom ~72: JENKINS, Benjamin~ 33:GB ~31:2017532.9 ~32:05/11/2020;33:GB ~31:2114586.7 ~32:12/10/2021

2023/04726 ~ Complete ~54:RECOMBINANT ADENO-ASSOCIATED VIRUS COMPOSITIONS AND METHODS FOR PRODUCING SAME ~71:Prevail Therapeutics, Inc., 430 East 29th Street, Suite 940, NEW YORK 10016, NY, USA, United States of America ~72: CHAN, Jonathan;DAI, Yong;DANIELS, Garrett;HALLER, Jorge;NELSON, Stuart;ZHOU, Jingmin~ 33:US ~31:63/092,179 ~32:15/10/2020

2023/04739 ~ Provisional ~54:LOTTO BET VIA BANK CARD ON ATM SCREEN ~71:GEORGE MAKHAYA MASOMBUKA, 1707 ALLEMANSDRIFT, BUTHI, SIYABUSWA, South Africa ~72: GEORGE MAKHAYA MASOMBUKA~

2023/04680 ~ Complete ~54:MOVABLE AND FOLDABLE WARDROBE AND USE METHOD THEREOF ~71:GUANGXI MINZU NORMAL UNIVERSITY, No. 23, Fozi Road, Jiangzhou District, Chongzuo, Guangxi, People's Republic of China ~72: HU Guoxia;SUN Suitai~

2023/04696 ~ Complete ~54:MOVABLE AND MODULAR HOUSING STRUCTURE ~71:BLACK ROCK CONSTRUCTION (PTY) LTD., Portion 53 of Farm 51, Mantenga, Ezulwini, THE KINGDOM OF ESWATINI, Swaziland ~72: ROQUES, Joseph~ 33:ZA ~31:2021/05531 ~32:04/02/2022

2023/04706 ~ Complete ~54:FISH TRANSFER SYSTEM AND METHOD ~71:TUBE FISHWAYS PTY. LTD., Level 8, 191 Clarence Street, Sydney, New South Wales, 2000, Australia ~72: FELDER, Stefan Markus;HARRIS, John Hamlyn;PEIRSON, William Leslie~ 33:AU ~31:2020244510 ~32:30/09/2020

2023/04707 ~ Complete ~54:DIRECT CURRENT-DIRECT CURRENT CONVERSION SYSTEM ~71:ZTE CORPORATION, ZTE Plaza Kej Road South Hi-Tech industrial Park, Nanshan District Shenzhen, Guangdong 518057, People's Republic of China ~72: CHENG, Jun;FAN, Shanshan;LI, Lei;SHEN, Xing;SHI, Sichao;YE, Xin;ZHANG, Wei;ZHOU, Jianping~ 33:CN ~31:202011035533.5 ~32:27/09/2020

2023/04716 ~ Complete ~54:SUBMERGED FEEDSTOCK CHARGING OF MELTING VESSELS ~71:Owens-Brockway Glass Container Inc., One Michael Owens Way, PERRYSBURG 43551, OH, USA, United States of America ~72: BASTARRACHEA, Karin Gabriela;DUFFY, David L.;HOLMES, Kirk;HOUCK, Roy J.;PLUMBO, II, Victor A.~ 33:US ~31:63/085,883 ~32:30/09/2020

2023/04720 ~ Complete ~54:FILTRATION DEVICE HAVING A LATCH MECHANISM ~71:Caterpillar Inc., 100 NE Adams Street, PEORIA 61629-9510, IL, USA, United States of America ~72: FINN, Timothy S.;NASH, Jeffrey P.~ 33:US ~31:17/039,385 ~32:30/09/2020

2023/04728 ~ Complete ~54:APPARATUS FOR THE ELECTROLYTIC PRODUCTION OF HYDROGEN ~71:WS SLOT SA, c/o DYN SA, Rue de la Grotte 6, LAUSANNE 1003 , SWITZERLAND, Switzerland ~72: CUARTERO GARCIA-MORATO, Ricardo~ 33:EP ~31:20208730.0 ~32:19/11/2020

2023/04735 ~ Complete ~54:SHEWANELLA ONEIDENSIS-DERIVED PROTEIN EXPRESSING MICROORGANISM AND L-AMINO ACID PRODUCING METHOD USING SAME ~71:CJ CHEILJEDANG CORPORATION, 330, Dongho-ro, Jung-gu, Seoul, 04560, Republic of Korea ~72: BORAM LIM;HAN HYOUNG LEE;HYO JEONG BYUN;HYUN WON BAE;JAEWON JANG;MOO YOUNG JUNG;SANG JUN KIM;SANG MIN PARK;YONG UK SHIN;YUNJUNG CHOI~ 33:KR ~31:10-2020-0171738 ~32:09/12/2020

2023/04662 ~ Provisional ~54:MECHANICAL PROCESSING OF STARCH ~71:BADENHORST, Hendrik Frederik, 21 Sandkuil Place, Waterkloof, South Africa ~72: BADENHORST, Hendrik Frederik~

2023/04665 ~ Provisional ~54:SOCIAL GARDIAN APP ~71:Arthur Tau Mahlatsi, 49 Piet Retief Blvd, Vanderbijlpark, 49 Piet Retief Blvd, Vanderbijlpark, South Africa ~72: Arthur Tau Mahlatsi~

2023/04668 ~ Complete ~54:DOUBLE-SCREW FOUR-LAYER CO-EXTRUDED PE SINGLE-MATERIAL PACKAGING FILM AND PREPARATION METHOD THEREOF ~71:Guangdong Lihong Innovative Materials Co., Ltd., Plot C12-4, Bonded Area, Shantou City, Guangdong Province, 515071, People's Republic of China ~72: LIN, Wenmao~

2023/04672 ~ Complete ~54:CONSTRUCTION METHOD FOR CLIMBING SCAFFOLDING FOR COMPLEX FAÇADE OF SUPER HIGH-RISE BUILDING ~71:THE SECOND CONSTRUCTION ENGINEERING COMPANY LTD. OF CHINA CONSTRUCTION SECOND ENGINEERING BUREAU, No.0169 Qianhai Road, Nanshan subdistrict, Nanshan District, Shenzhen, 518000, People's Republic of China ~72: AN, Huili;DENG, Zhiyi;FANG, Ping;LI, Jinghui;LI, Yulin;LIU, Guoyi;LIU, Shengyan;WANG, Fei;WEN, Zhipeng;XIANG, Rong;XING, Xiangnan;YANG, Dengbo;ZHANG, Tao;ZHAO, Shibo~

2023/04675 ~ Complete ~54:A METHOD FOR ULTRASONIC-OZONE SYNERGISTICALLY ENHANCED LEACHING OF INDIUM AND ZINC FROM ZINC DUST ~71:Kunming University of Science and Technology, No. 253 Xuefu Road, Wuhua District, Kunming City, Yunnan Province, 650032, People's Republic of China ~72: Jing Li;Kun Yang;Libo Zhang;Lihua Zhang;Shaohua Yin;Siqi Yang;Xianyu Xia~ 33:CN ~31:202211090626.7 ~32:07/09/2022

2023/04682 ~ Complete ~54:C55 CONCRETE WITH SYNERGISTIC EARLY PERFORMANCE OF HLX POLYCARBOXYLIC ACID SUPERPLASTICIZER AND POLYPROPYLENE FIBER ~71:Jilin Jianzhu University, No. 5088, Xincheng Street, Changchun City, Jilin Province, People's Republic of China ~72: AI Yongming;GONG Yafeng;LIU Enguang;QIAN Xuesong;SONG Xuedong;WANG Jie;WANG Jing;ZHANG Yunlong~ 33:CN ~31:202310342471X ~32:03/04/2023

2023/04685 ~ Complete ~54:CYCLIC PLANTING-CULTURING SYSTEM AND PLANTING-CULTURING TECHNOLOGY ~71:Jiangsu Provincial Freshwater Fisheries Research Institute, No. 79, Chating East Street, Jianye District, Nanjing City, Jiangsu Province, 210017, People's Republic of China ~72: LI, Jiajia;LIN, Hai;LIU, Guoxing;PAN, Jianlin;XU, Yu;XU, Zhiqiang;ZHANG, Xiaowei~

2023/04689 ~ Complete ~54:FEED ADDITIVE FOR REDUCING PANCREATIC CELL APOPTOSIS OF PIGLETS ~71:ANIMAL HUSBANDRY RESEARCH INSTITUTE OF HEILONGJIANG ACADEMY OF AGRICULTURAL SCIENCES, NO. 368 XUEFU ROAD, People's Republic of China;NORTHEAST INSTITUTE OF GEOGRAPHY AND AGROECOLOGY, CHINESE ACADEMY OF SCIENCES, NO. 138 HAPING ROAD, People's Republic of China ~72: CHEN, Heshu;HE, Haijuan;LI, Zhongqiu;LIU, Chunlong;LIU, Di;LIU, Ziguang;PENG, Fugang;WANG, Liang;WANG, Wentao;WU, Saihui~

2023/04694 ~ Complete ~54:IMAGE RESHAPING IN VIDEO CODING USING RATE DISTORTION OPTIMIZATION ~71:DOLBY LABORATORIES LICENSING CORPORATION, 1275 Market Street, San Francisco, California, 94103, United States of America ~72: FANGJUN PU;PENG YIN;SEAN THOMAS MCCARTHY;TAO CHEN;TAORAN LU;WALTER J HUSAK~ 33:US ~31:62/630,385 ~32:14/02/2018;33:US ~31:62/691,366 ~32:28/06/2018;33:US ~31:62/726,608 ~32:04/09/2018;33:US ~31:62/739,402 ~32:01/10/2018;33:US ~31:62/772,228 ~32:28/11/2018;33:US ~31:62/782,659 ~32:20/12/2018;33:US ~31:62/792,122 ~32:14/01/2019

2023/04697 ~ Complete ~54:HIGH-ACTIVITY DESULFURIZATION POWDER PREPARATION SYSTEM ~71:TIANJIN ZHIHUI NEW MATERIAL CO., LTD., A Workshop 4, No.37, Panlongshan Road, Economic Development Zone, Jizhou District, Tianjin, 301900, People's Republic of China ~72: GAO, Zhijun;LI, Jian;ZHU, Huadong~ 33:CN ~31:202111155977.7 ~32:30/09/2021

2023/04702 ~ Complete ~54:TRACK PAD WITH UNIFORM HARDENED REGION ~71:CATERPILLAR INC., 100 NE Adams Street, United States of America ~72: JONES, Benjamin;MAGNER, Scott H.~ 33:US ~31:16/949,593 ~32:05/11/2020

2023/04710 ~ Complete ~54:SOFTWARE METHOD FOR OPTO-SENSORY DETECTION, MEASUREMENT AND VALUATION OF TOOL CONDITIONS ~71:TECHNISCHE UNIVERSITÄT DRESDEN, Helmholtzstrasse 10, Germany ~72: Martin HENGST;Patrick ZIRKER;Sören GEISSLER;Samuel PANTKE;Thomas HERLITZIUS~ 33:DE ~31:10 2020 128 759.3 ~32:02/11/2020

2023/04715 ~ Complete ~54:MOLTEN GLASS FEEDING AND MOLDING ~71:Owens-Brockway Glass Container Inc., One Michael Owens Way, PERRYSBURG 43551, OH, USA, United States of America ~72: ALTENDORFER, Bernard;ANDERSON, Walter;FLYNN, Robin L.;FULLER, Alexandra;JOHNSTON, Karl;NAFZIGER, Gregory W.;WEIL, Scott~ 33:US ~31:63/085,640 ~32:30/09/2020

2023/04721 ~ Complete ~54:FILTRATION DEVICE HAVING A LATCH MECHANISM ADAPTER ~71:Caterpillar Inc., 100 NE Adams Street, PEORIA 61629-9510, IL, USA, United States of America ~72: COLANTONI, David J.;FINN, Timothy Sean;RYON, Shawn M.~ 33:US ~31:17/039,372 ~32:30/09/2020

2023/04729 ~ Complete ~54:MODULATORS OF MAS-RELATED G-PROTEIN RECEPTOR X2 AND RELATED PRODUCTS AND METHODS ~71:Escient Pharmaceuticals, Inc., 10578 Science Center Drive, Suite 250, SAN DIEGO 92121, CA, USA, United States of America ~72: BOEHM, Marcus;HUANG, Liming;LANIER, Marion;MARTINBOROUGH, Esther;SAINZ, Marcos;SELFRIDGE, Brandon;YEAGER, Adam~ 33:US ~31:63/083,638 ~32:25/09/2020;33:US ~31:63/145,407 ~32:03/02/2021;33:US ~31:63/211,987 ~32:17/06/2021

2023/04740 ~ Provisional ~54:SUPER,SKIMMER,VACUUM FILTER ~71:Alan Brian Pauwels, 22 Danielsrust,, South Africa ~72: Mr Alan Brian Pauwels~

2023/04660 ~ Provisional ~54:ROAD TAR IN SEALED PLASIC BAG ~71:G.J. Cloete, 112 Nothdene st, South Africa ~72: G.J. Cloete~

2023/04670 ~ Complete ~54:CONSTRUCTION METHOD FOR FINISHING DRILLING OF HOLE FOR ROTARY DRILLING PILE IN LONESTONE ~71:THE SECOND CONSTRUCTION ENGINEERING COMPANY LTD. OF CHINA CONSTRUCTION SECOND ENGINEERING BUREAU, No.0169 Qianhai Road, Nanshan subdistrict, Nanshan District, Shenzhen, 518000, People's Republic of China ~72: CHAI, Da;LI, Pengcheng;LIN, Zhende;LUO, Yongxing;WEI, Lixin~

2023/04673 ~ Complete ~54:STRUCTURE FOR SEISMIC ISOLATION NODE JOINT OF INTERSECTION OF BUILDING WALL AND CONCRETE AND CONSTRUCTION METHOD THEREOF ~71:Fujian Huidong Construction Engineering Co., Ltd, No. 126, Dongxing Street, Dongling Town, Hui'an County, Quanzhou, Fujian, 362100, People's Republic of China ~72: LIN, Huaping;LIN, Ling;LIU, Yuezhong;WANG, Yumin;ZHANG, Peiyang~

2023/04678 ~ Complete ~54:MOVABLE MAHOGANY BED AND MOVING METHOD ~71:GUANGXI MINZU NORMAL UNIVERSITY, No. 23, Fozi Road, Jiangzhou District, Chongzuo, Guangxi, People's Republic of China ~72: HU Guoxia;SUN Suitai~

2023/04683 ~ Complete ~54:SEGMENTATION METHOD FOR IMAGE WITH DERMATOLOGICAL LESION ~71:Shenyang University of Technology, No. 111, Shenliao West Road, Shenyang Economic and Technological Development Zone, Shenyang City, Liaoning Province, 110870, People's Republic of China ~72: CUI, Wencheng;SHAO, Hong;ZHANG, Pengxia~

2023/04690 ~ Complete ~54:LANDSLIDE MONITORING AND WARNING METHOD AND SYSTEM BY GROUND-BASED RADAR ~71:China Nonferrous Metal Changsha Survey and Design Institute Co., Ltd., No. 101, Building 1, Kangting Garden, No. 579 Zhenhua Road, Yuhua District, Changsha City, Hunan Province, 410117, People's Republic of China ~72: DU,Nianchun;SHEN,Xiangqian;SU,Chuang~ 33:CN ~31:202211613635.X ~32:15/12/2022

2023/04717 ~ Complete ~54:RECOMBINANT VECTORS ENCODING CHIMERIC CORONAVIRUS SPIKE PROTEINS AND USE THEREOF ~71:Intervet International B.V., Wim de Körverstraat 35, BOXMEER 5831 AN, THE NETHERLANDS, Netherlands ~72: BOSCH, Berend Jan;DE GROOF, Ad;LANGEREIS, Martijn Alexander;VERMEIJ, Paul~ 33:EP ~31:20207302.9 ~32:12/11/2020;33:EP ~31:21166533.6 ~32:01/04/2021

2023/04725 ~ Complete ~54:TEMPLATE MATCHING IN VIDEO CODING ~71:QUALCOMM Incorporated, ATTN: International IP Administration, 5775 Morehouse Drive, SAN DIEGO 92121-1714, CA, USA, United States of America ~72: CHEN, Chun-Chi;HUANG, Han;KARCZEWICZ, Marta;SEREGIN, Vadim;ZHANG, Zhi~ 33:US ~31:63/131,676 ~32:29/12/2020;33:US ~31:17/558,119 ~32:21/12/2021

2023/04734 ~ Complete ~54:ALPHA PROTEIN KINASE 1 INHIBITORS AND METHODS OF USE ~71:SHANGHAI YAO YUAN BIOTECHNOLOGY CO., LTD., 43 Handan Road, Room 701 Shanghai 200437, People's Republic of China ~72: CONG XU;DANYANG LIU;HENRI LICHENSTEIN;HUAIXIN DANG;JIEQING FAN;LAWRENCE S MELVIN JR;TIAN XU;TONGRUEI RAYMOND LI;XIONG WEI;YANFANG PAN~ 33:CN ~31:PCT/CN2020/117436 ~32:24/09/2020

2023/04669 ~ Complete ~54:PUMPING TREATMENT SYSTEM FOR GROUNDWATER WITH HEAVY ORGANIC POLLUTION ~71:Institute of Hydrogeology and Environmental Geology, Chinese Academy of Geological Sciences, No. 268, North Zhonghua Street, Xinhua District, Shijiazhuang City, Hebei Province, 050061, People's Republic of China ~72: CUI, Xiangxiang;DUN, Yu;GUO, Chunyan;MENG, Suhua;QIAN, Yong;WANG, Wenzhong;YUE, Chen;ZHEN, Shijun~

2023/04674 ~ Complete ~54:DYNAMIC MONITORING SYSTEM FOR LANDSLIDES AND DEBRIS FLOWS ~71:Qinghai 906 Engineering Survey and Design Institute Co. LTD, NO.77 Haiyan Road, Chengxi District, Xining City, Qinghai Province, People's Republic of China;Qinghai Bureau of Environmental Geology Exploration, NO.77 Haiyan Road, Chengxi District, Xining City, Qinghai Province, People's Republic of China;Qinghai Institute of Geological and Environmental Survey, NO.77 Haiyan Road, Chengxi District, Xining City, Qinghai Province, People's Republic of China ~72: LI Yingjun;LI Yun;QI Zexue;WEI Zhanxi;YU Xiaojun~

2023/04679 ~ Complete ~54:FORMULA OF FLAVORED SHREDDED DRIED SCALLOP SEASONING SAUCE, PREPARATION METHOD AND EFFECTS THEREOF ~71:Jiangmen Geili Biology Science and Technology Co., Ltd, Room 230, Floor 2, No.12 Gongye Road, West Zone, Pengjiang District, Jiangmen City, Guangdong Province, People's Republic of China ~72: ZHANG Jun;ZHANG Liang;ZHANG Yibin~

2023/04686 ~ Complete ~54:DOUBLE-BINDING-SITE FLUORESCENT VECTOR OF MIRNA TARGET GENE AND CONSTRUCTION METHOD AND APPLICATION THEREOF ~71:HUNAN ANIMAL AND VETERINARY MEDICINE, NO. 8 CHANGLANG ROAD, People's Republic of China ~72: CHEN, Chen;CUI, Qingming;DENG, Yuan;HU, Xionggui;LIU, Yingying;LUO, Xuan;PENG, Yinglin;REN, Huibo;XIE, Julan;ZHANG, Xing;ZHU, Ji;ZUO, Jianbo~

2023/04698 ~ Complete ~54:PESTICIDAL COMPOSITION COMPRISING ELEMENTAL SULPHUR AND CHOLINE SALT OF PELARGONIC ACID ~71:DOSHI, Hiteshkumar Anilkant, 801, Anmol Residency, Opp. Singhania School, Pokharan Road No. 1, Samata Nagar, Thane, 400 606, India ~72: DOSHI, Hiteshkumar Anilkant~ 33:IN ~31:202021035357 ~32:17/08/2020

2023/04704 ~ Complete ~54:WEAR AND LOSS DETECTION SYSTEM AND METHOD USING BUCKET-TOOL TEMPLATES ~71:CATERPILLAR INC., 100 NE Adams Street, United States of America ~72: PETRANY, Peter, Joseph;RAM, Shastri~ 33:US ~31:17/086,117 ~32:30/10/2020

2023/04708 ~ Complete ~54:ESTIMATION OF THE TEMPERATURE OF A STEEL PRODUCT ~71:ARCELORMITTAL, 24-26, Boulevard d'Avranches, Luxembourg ~72: Gwenaël LE NOC;Morgan FERTE;Noëlle MICQUE~ 33:IB ~31:PCT/IB2020/061937 ~32:15/12/2020

2023/04712 ~ Complete ~54:ENTERIC PELLET, PREPARATION METHOD THEREFOR, AND PREPARATION COMPRISING SAME ~71:LIVZON PHARMACEUTICAL GROUP INC., The Headquarters Building, No. 38 Chuangye North Road, Jinwan District, Zhuhai, People's Republic of China ~72: CHENG, Caihua;CUI, Yannan;FENG, Yang;HAN, Zhihui;HOU, Xuemei;HU, Siwen;JIAO, Shenchao;LI, Pucheng;LIN, Weishan;MO, Yating;SHEN, Hongdan;TU, Zengqing;WU, Lei;ZHANG, Xiangna;ZHANG, Yurong;ZHANG, Zhuanxia~ 33:CN ~31:202011391266.5 ~32:02/12/2020

2023/04663 ~ Provisional ~54:A PROCESS FOR THE CONVERSION OF WASTE INTO AN ENERGY SOURCE ~71:MCFARLANCE, Garth, 62 Harrowgate, Perivale Road, Bryanston, South Africa ~72: MACFARLANE, Garth~

2023/04666 ~ Provisional ~54:METHOD AND SYSTEM FOR CUSTOMISED BEVERAGE AND CONSUMER PRODUCT FLAVOUR CONCENTRATE PRODUCTION ~71:Andrew Gould, No. 39 El Sol, 73 Johnston Street, Sunnyside, Pretoria, Gauteng, 0002, South Africa;Kyle Tee, 160 Dale Road, Rietondale, Pretoria, Gauteng, 0084, South Africa ~72: Andrew Gould;Kyle Tee~

2023/04676 ~ Complete ~54:CULTIVATION METHOD FOR EARLY FRUITING AND HIGH YIELDS OF DONGSHI PRECOCIOUS POMELOS ~71:Institute of Tropical and Subtropical Economic Crops, Yunnan Academy of Agricultural Sciences, No. 13, Changqing Road, Ruili City, Dehong Prefecture, Yunnan, 678600, People's Republic of China ~72: DONG, Meichao;GAO, Junyan;GUO, Lina;WANG, Shaohua;WANG, Ziran;YANG, Fan;ZHAO, Jun;ZHOU, Dongguo~ 33:CN ~31:202211638711.2 ~32:20/12/2022

2023/04692 ~ Complete ~54:MULTI LEVEL AIRPORT RUNWAY SYSTEM ~71:TECHNO INDIA UNIVERSITY,WEST BENGAL, EM-4, SECTOR-V, SALT LAKE, KOLKATA-700091, WEST BENGAL, India ~72: Dipayan Ghosh;Dr. Subhasish Biswas~

2023/04709 ~ Complete ~54:ANNEALING METHOD ~71:ARCELORMITTAL, 24-26, Boulevard d'Avranches, Luxembourg ~72: Didier HUIN;Florence BERTRAND;Hubert SAINT-RAYMOND~ 33:IB ~31:PCT/IB2020/061960 ~32:15/12/2020

2023/04714 ~ Complete ~54:SNCA IRNA COMPOSITIONS AND METHODS OF USE THEREOF FOR TREATING OR PREVENTING SNCA-ASSOCIATED NEURODEGENERATIVE DISEASES ~71:ALNYLAM PHARMACEUTICALS, INC., 675 WEST KENDALL STREET HENRI A. TERMEER SQUARE CAMBRIDGE, United States of America ~72: CASTORENO, Adam;DANG, Lan Thi Hoang;KAITTANIS, Charalambos;MCININCH, James D.;SCHLEGEL, Mark K.;SOUNDARAPANDIAN, Mangala Meenakshi~ 33:US ~31:63/086,495 ~32:01/10/2020

2023/04722 ~ Complete ~54:FLUID-COOLED MECHANISM FOR MOLTEN MATERIAL FLOW CONTROL ~71:Owens-Brockway Glass Container Inc., One Michael Owens Way, PERRYSBURG 43551, OH, USA, United States of America ~72: FLEETWOOD, Russel K.;RASHLEY, Shane T.~ 33:US ~31:17/039,734 ~32:30/09/2020

2023/04730 ~ Complete ~54:HERBICIDE MIXTURE, HERBICIDAL COMPOSITION, METHOD FOR PREVENTING UNDESIRED VEGETATION AND KIT ~71:Adama Agan Ltd., P.O. Box 262, Northern Industrial

Zone, ASHDOD 7710201, ISRAEL, Israel ~72: MIRYAMCHIK, Hadas;WANG, Peng;YOGEV, Ehud;YUAN, Chuanwei~ 33:CN ~31:202011105597.8 ~32:15/10/2020

2023/04736 ~ Complete ~54:COATED MEDICAL PRODUCT ~71:HEMOTEQ AG, Adenauerstrasse 15, 52146, Würselen, Germany ~72: ERIKA HOFFMANN;GÜNTER MATHAR;MICHAEL HOFFMANN~ 33:EP ~31:20207915.8 ~32:16/11/2020

2023/04664 ~ Provisional ~54:METHOD OF SHARING INFORMATION OVER INSECURE CHANNEL ~71:Dirk Jacobus ACKERMAN, 9 Nyala Street, Buffalo Creek, The Wilds, Pretoriuspark X17, South Africa ~72: Dirk Jacobus ACKERMAN~

2023/04667 ~ Complete ~54:HIGH-BARRIER AND HIGH-STRENGTH COMPOSITE PACKAGING FILM AND PREPARATION METHOD THEREOF ~71:Guangdong Lihong Innovative Materials Co., Ltd., Plot C12-4, Bonded Area, Shantou City, Guangdong Province, 515071, People's Republic of China ~72: CHEN, Jianping;LIN, Wenmao;SUN, Lijia~

2023/04671 ~ Complete ~54:SWING TYPE SEISMIC ISOLATION SUPPORT ~71:THE SECOND CONSTRUCTION ENGINEERING COMPANY LTD. OF CHINA CONSTRUCTION SECOND ENGINEERING BUREAU, No.0169 Qianhai Road, Nanshan subdistrict, Nanshan District,, Shenzhen, 518000, People's Republic of China ~72: AN, Huili;FENG, Jiaqiang;LI, Yulin;MA, Guoliang;XIANG, Rong~

2023/04687 ~ Complete ~54:FEED ADDITIVE FOR IMPROVING PANCREAS OXIDATIVE STRESS OF PIGLETS ~71:ANIMAL HUSBANDRY RESEARCH INSTITUTE OF HEILONGJIANG ACADEMY OF AGRICULTURAL SCIENCES, NO. 368 XUEFU ROAD, People's Republic of China;NORTHEAST INSTITUTE OF GEOGRAPHY AND AGROECOLOGY, CHINESE ACADEMY OF SCIENCES, NO. 138 HAPING ROAD, People's Republic of China ~72: HE, Xinmiao;LI, Miao;LI, Zhongqiu;LIU, Chunlong;LIU, Di;QI, Meiyu;SUN, Jinyan;TIAN, Ming;ZHANG, Dongjie;ZHANG, Haifeng~

2023/04691 ~ Complete ~54:A METHOD FOR SYNTHESIZING MESOPOROUS FE/AL/LA TRIMETALLIC OXIDE FOR PHOTODEGRADATION OF VARIOUS WATER-SOLUBLE DYES ~71:TECHNO INDIA UNIVERSITY, WEST BENGAL, EM-4, SECTOR-V, SALT LAKE, KOLKATA-700091, WEST BENGAL, India ~72: Arnab Mukherjee;Dr. Debasis Dhak;Dr. Jayati Ray;Dr. Prasanta Dhak~

2023/04695 ~ Complete ~54:WEARABLE GAMING DEVICE AND METHOD THEREOF ~71:BOREAL TECHNOLOGY & INVESTMENT S.L., Avd Sor Teresa Prat, 15, 29003, Málaga, Spain ~72: JOSE FUERTES PEÑA~ 33:EP ~31:19382962.9 ~32:04/11/2019

2023/04699 ~ Complete ~54:PESTICIDAL COMPOSITION COMPRISING ELEMENTAL SULPHUR AND FLUPYRADIFURONE ~71:DOSHI, Hiteshkumar Anilkant, 801, Anmol Residency, Opp. Singhania School, Pokharan Road No. 1, Samata Nagar, Thane, Maharashtra, 400 606, India ~72: DOSHI, Hiteshkumar Anilkant~ 33:IN ~31:IN202021041292 ~32:23/09/2020

2023/04703 ~ Complete ~54:TRAILING ARM ASSEMBLY ~71:VDL WEWELER B.V., 10, Ecofactorij, WC APELDOORN, Netherlands ~72: SCHRIER, Tom~ 33:NL ~31:2027187 ~32:21/12/2020

2023/04713 ~ Complete ~54:SYSTEM FOR WASHING BIOLOGICAL WASTE TO RECOVER SAME AS SOLID BIOFUEL ~71:CARABALL UGARTE, José Antonio, Los Cipreses 77, Rocas de Santo Domino Valparaíso, Valparaíso, Chile;GUZMÁN BLANCO, Enrique, Vía Roja 4350, Vitacura Santiago, Chile ~72: CARABALL UGARTE, José Antonio~

2023/04719 ~ Complete ~54:INTRAOCULAR LENS, INSERTION INSTRUMENT THEREFOR, ASSEMBLY PROVIDED THEREWITH, AND METHOD FOR MANUFACTURE ~71:Ophtec B.V., Schweitzerlaan 15, GRONINGEN 9728 NR, THE NETHERLANDS, Netherlands ~72: BIEMOLD, Peter;DUSSELJEE, Jan Hendrik;SIMON, Harry Franciscus;SPEELMAN, Roelof;ZIJLSTRA, Tjalke Jaddai~ 33:NL ~31:2026797 ~32:30/10/2020

2023/04723 ~ Complete ~54:CULLET AND CULLET WATER HANDLING SYSTEM ~71:Owens-Brockway Glass Container Inc., One Michael Owens Way, PERRYSBURG 43551, OH, USA, United States of America ~72: ASMUS, Joseph;BEABER, Corey;HOLMES-LIBBIS, John;RAUSCH, Philip J.~ 33:US ~31:63/085,644 ~32:30/09/2020

2023/04733 ~ Complete ~54:METHOD FOR CALCULATING BULK MATERIAL CONVEYING RATES OR BULK MATERIAL LOADS OF A VIBRATORY MACHINE ~71:SANDVIK MINING AND CONSTRUCTION DEUTSCHLAND GMBH, Schiessstr. 49, 40549, Düsseldorf, Germany ~72: JAN SCHAEFER;VIKTOR RAIS~ 33:DE ~31:10 2020 124 997.7 ~32:25/09/2020

2023/04737 ~ Provisional ~54:ELECTRONIC MONEY MARKET CARD VIA ATM ON APP ~71:GEORGE MAKHAYA MASOMBUKA, 1707 ALLEMANSDRIFT, BUTHI, SIYABUSWA, South Africa ~72: GEORGE MAKHAYA MASOMBUKA~

. - APPLIED ON 2023/04/25 -

2023/04747 ~ Complete ~54:METHOD FOR FABRICATING MICRO LED CHARACTER DISPLAY CHIP ~71:Jiangxi Ruixin Microelectronics Technology Co., Ltd., Building 1, Workshop 2, Electronic Science Park, South of Huoju 4th Road, West of Keji 1st Avenue, National Youth Entrepreneurship Base, Gongqingcheng City, Jiujiang City, Jiangxi Province, 332000, People's Republic of China ~72: CHEN, Kun;HUANG, Jianmin;LU, Fangqiang;WAN, Jinping;YU, Tianbao;ZHAO, Jie~

2023/04752 ~ Complete ~54:DEVICE FOR SETTING A SPECIFIC OPERATING POSITION OF AN APPARATUS COMPONENT AND METHOD THEREFOR ~71:EVG ENTWICKLUNGS- U. VERWERTUNGS-GESELLSCHAFT M.B.H., GUSTINUS-AMBROSI-STRASSE 1-3, A-8074 RAABA, AUSTRIA, Austria ~72: POTOCNIK, Wolfgang~ 33:EP ~31:22170568.4 ~32:28/04/2022

2023/04754 ~ Complete ~54:A KIND OF ORE SCREENING EQUIPMENT ~71:LU'AN LONGYIXING MACHINERY CO., LTD, Gaocheng Chuangka, 2nd Floor, Science And Technology Entrepreneurship Service Center, Lu'an Economic And Technological Development Zone, Lu'an City, Anhui Province, 237000, People's Republic of China ~72: ZHU Chengjie~

2023/04758 ~ Complete ~54:BOREHOLE ACCESSORY ~71:VAN SCHALKWYK, Hermanus Richard, 91 Jan Frederik Street, NINAPARK 0182, SOUTH AFRICA, South Africa ~72: VAN SCHALKWYK, Hermanus Richard~ 33:ZA ~31:2021/08324 ~32:28/04/2022

2023/04762 ~ Complete ~54:METHODS OF CALCULATING PHYSICAL RESOURCE BLOCK UTILIZATION AND RELATED NETWORK NODES ~71:TELEFONAKTIEBOLAGET LM ERICSSON (PUBL), 164 83, Sweden ~72: RAMACHANDRA, Pradeepa;REDHWAN, Sakib Bin~ 33:US ~31:63/112,554 ~32:11/11/2020

2023/04765 ~ Complete ~54:NOVEL ANTI-CD47 ANTIBODIES AND USES THEREOF ~71:I-MAB BIOPHARMA CO., LTD., Suite 802, West Tower, OmniVision Tech Park, 88 Shangke Road Shanghai, 201210, People's Republic of China ~72: BINGSHI GUO;CONG XU;WEI CAO;ZHENGYI WANG~ 33:CN ~31:PCT/CN2020/120869 ~32:14/10/2020;33:CN ~31:PCT/CN2020/122188 ~32:20/10/2020

2023/04767 ~ Complete ~54:CONVEYOR PULLEY ELECTRIC GENERATOR ~71:LAUBSCHER, Bernard, 14 Chelsea Lane, Plantations, South Africa ~72: LAUBSCHER, Bernard~ 33:ZA ~31:2022/03689 ~32:31/03/2022

2023/04784 ~ Complete ~54:SPRAY DELIVERY SYSTEM ~71:Precision Valve Corporation, 5711 Old Buncombe Road, GREENVILLE 29609, SC, USA, United States of America ~72: FORE, John B.~ 33:US ~31:63/112,748 ~32:12/11/2020

2023/04742 ~ Complete ~54:METHOD FOR IMPROVING THE YIELD OF BRASSICA CHINENSIS IN WINTER ~71:Shandong Academy of Agricultural Sciences, No.23788,Industry North Road, Licheng District, Jinan City, Shandong Province, 250100, People's Republic of China ~72: CUI Rongzong;LI Yan;MA Lei;TAN Deshui;WANG li;WEI Jianlin;WU Xiaobin;ZHENG Fuli~ 33:CN ~31:2022110162469 ~32:24/08/2022

2023/04745 ~ Complete ~54:ROTATABLE BREEDING AUXILIARY DEVICE ~71:MOUTAI INSTITUTE, Luban Avenue, Renhuai City, People's Republic of China ~72: LI, Qiong;YAN, Songxian~ 33:CN ~31:202211023271.X ~32:25/08/2022

2023/04751 ~ Complete ~54:METHOD OF IMPROVING OXIDATION RESISTANCE AND FRAGRANCE OF EUCOMMIA ULMOIDES OLIV. BEVERAGE ~71:RESEARCH INSTITUTE OF NON-TIMBER FORESTRY, CHINESE ACADEMY OF FORESTRY, 3 WEIWU ROAD, People's Republic of China ~72: DU, Hongyan;DU, Lanying;DU, Qingxin;LIU, Panfeng;SUN, Zhiqiang;WANG, Lu;WANG, Yan;ZHOU, Yunfei~

2023/04759 ~ Complete ~54:A GOAF PLUGGING DEVICE CAPABLE OF AUTOMATICALLY ADJUSTING OPENING AND CLOSING STATE AND INSTALLATION METHOD THEREOF ~71:Changsha Institute of Mining Research, Co., Ltd, No. 343, South Lu Shan Road, Yuelu District, Changsha, Hunan Province, People's Republic of China ~72: Chang Liu;Guanying Lv;Huansha He;Liang Zhao;Min Qin;Weiming Li;Xiaoming Niu;Yinghua Huang;Zeyang Guo;Zhen Li~ 33:CN ~31:2022114616263 ~32:17/11/2022

2023/04768 ~ Complete ~54:ANTIBACTERIAL METHODS & CELLS ~71:Folium Food Science Limited, Science Creates, Old Market, Midland Road, United Kingdom ~72: BAIG, Abiyad;CLUBE, Jasper;WARNER, Simon~ 33:GB ~31:2017618.6 ~32:08/11/2020

2023/04771 ~ Complete ~54:MULTI-PASS DECODER-SIDE MOTION VECTOR REFINEMENT ~71:QUALCOMM Incorporated, ATTN: International IP Administration, 5775 Morehouse Drive, SAN DIEGO 92121-1714, CA, USA, United States of America ~72: CHEN, Chun-Chi;HUANG, Han;KARCZEWICZ, Marta;SEREGIN, Vadim;ZHANG, Yan;ZHANG, Zhi~ 33:US ~31:63/129,221 ~32:22/12/2020;33:US ~31:17/556,142 ~32:20/12/2021

2023/04775 ~ Complete ~54:HERBICIDAL COMPOUNDS ~71:Syngenta Crop Protection AG, Rosentalstrasse 67, BASEL 4058, SWITZERLAND, Switzerland ~72: WHITTINGHAM, William Guy;WILLIAMS, John~ 33:EP ~31:20209638.4 ~32:24/11/2020

2023/04779 ~ Complete ~54:CHIMERIC PROTEIN COMPRISING THE RECEPTOR BINDING DOMAIN OF THE CORONAVIRUS SPIKE PROTEIN AAND COMPOSITIONS THEREOF ~71:Centro de Ingenieria Genetica y Biotecnologia, Ave. 31 No. 15802, entre 158 y 190, Cubanacan, PLAYA 11600, LA HABANA, CUBA, Cuba ~72: AYALA ÁVILA, Marta;BEQUET ROMERO, Mónica;CABRALES RICO, Ania;CHINEA SANTIAGO, Glay;GONZÁLEZ ROCHE, Diamilé;GUILLEN NIETO, Gerardo Enrique;HUERTA GALINDO, Vivian;IGLESIAS PÉREZ, Enrique;LIMONTA FERNÁNDEZ, Miladys;MARQUEZ PERERA, Gabriel J.;MARTÍN DUNN, Alejandro Miguel;MUSACCHIO LASA, Alexis;PIMENTEL VAZQUEZ, Eulogio;ROJAS DORANTES, Gertrudis;SANTANA MILIAN, Héctor~ 33:CU ~31:2020-0081 ~32:04/11/2020

2023/04785 ~ Complete ~54:APPARATUS FOR DRYING GYPSUM BOARDS ~71:SAINT-GOBAIN PLACO, Tour Saint-Gobain 12 place de l'Iris, France ~72: KANCHARLAPALLI, Siva;MCGAFFIN, Sam;PATEL, Manish;SUTTON, Peter;TISSOT, Amélie;TRAN, Binh~ 33:EP ~31:21305069.3 ~32:20/01/2021

2023/04769 ~ Complete ~54:COMBINATION OF PARA-AMINOHIPPURIC ACID (PAH) AND RADIOLABELED COMPLEXES FOR TREATING CANCER ~71:ITM ISOTOPE TECHNOLOGIES MUNICH SE, Lichtenbergstrasse 1, Germany ~72: MECKEL, Marian;OSL, Theresa;ZHERNOSEKOV, Konstantin~ 33:EP ~31:PCT/EP2020/081143 ~32:05/11/2020

2023/04773 ~ Complete ~54:NEUROMELANIN-SENSITIVE MRI AND METHODS OF USE THEREOF ~71:Terran Biosciences, Inc., 507 W. 28th Street, Suite PH3A, NEW YORK 10001, NY, USA, United States of America;The Research Foundation for Mental Hygiene, Inc., 150 Broadway, Suite 301, MENANDS 12204, NY, USA, United States of America;The Royal Institution for the Advancement of Learning/McGill University, 845 Shebrook St. W, MONTREAL H3A 0G4, QUÉBEC, CANADA, Canada;Trustees of Columbia University in the City of New York, 412 Low Memorial Library, 535 West 116th Street, NEW YORK 10027, NY, USA, United States of America;University of Ottawa Institute of Mental Health Research, 1145 Carling Avenue, OTTAWA K1Z 7K4, ONTARIO, CANADA, Canada ~72: CASSIDY, Clifford;CLARK, Samuel;HORGA HERNANDEZ, Guillermo;ROSA-NETO, Pedro;WENGLER, Kenneth~ 33:US ~31:63/114,304 ~32:16/11/2020;33:US ~31:63/120,105 ~32:01/12/2020;33:US ~31:63/277,490 ~32:09/11/2021

2023/04777 ~ Complete ~54:DECODER SIDE INTRA MODE DERIVATION FOR MOST PROBABLE MODE LIST CONSTRUCTION IN VIDEO CODING ~71:QUALCOMM Incorporated, ATTN: International IP Administration, 5775 Morehouse Drive, SAN DIEGO 92121-1714, CA, USA, United States of America ~72: KARCZEWICZ, Marta;LI, Jingya;SEREGIN, Vadim~ 33:US ~31:63/129,004 ~32:22/12/2020;33:US ~31:17/502,875 ~32:15/10/2021

2023/04778 ~ Complete ~54:COMPLEX MATERIALS ~71:Weir Minerals Australia Ltd, 1-3 Marden Street, ARTARMON 2064, NEW SOUTH WALES, AUSTRALIA, Australia ~72: LI, Dongyang;LIU, Ruiliang;TANG, Xinhu;TANG, Yunqing;ZHANG, Dong~ 33:AU ~31:2020904431 ~32:30/11/2020

2023/04783 ~ Complete ~54:IMPROVEMENTS IN OR RELATING TO ORGANIC COMPOUNDS ~71:Givaudan SA, Chemin de la Parfumerie 5, VERNIER 1214, SWITZERLAND, Switzerland ~72: KEARNEY, Frederick Richard;WARNER, John C.;WHITFIELD, Justin~ 33:US ~31:63/118,124 ~32:25/11/2020

2023/04741 ~ Provisional ~54:FILLER BODY ~71:Tshwane University of Technology, Arcadia Campus, 175 Mandela Drive, Arcadia, PRETORIA 0083, Gauteng Province, SOUTH AFRICA, South Africa ~72: NAIDOO, Sagunthala Appal~

2023/04744 ~ Complete ~54:A NET BED FOR THE FLAT REARING OF GEESE ON THE NET ~71:Yangzhou University, 88 South Daxue Road, Yangzhou, Jiangsu Province, 225009, People's Republic of China ~72: Haiming YANG;Qianwen YANG;Xiaoli WAN;Yajun MIAO;Zhiyue WANG~

2023/04748 ~ Complete ~54:GAS-COLLECTOR IN DRY LAND ~71:Zhejiang Academy of Agricultural Sciences, Zhejiang Academy of Agricultural Sciences, No. 198, Shiqiao Road, Shangcheng District, Hangzhou City, Zhejiang Province, 310021, People's Republic of China ~72: Li Yan;Tang Xu;Wu Chunyan;Yin Chang~ 33:CN ~31:2023103352872 ~32:31/03/2023

2023/04750 ~ Complete ~54:SYSTEM AND METHOD FOR TREATING INDIVIDUAL SEEDS WITH LIQUID CHEMICALS DURING THE PLANTING PROCESS ~71:AMVAC HONG KONG LIMITED, 11/F., Unit B, Winbase Centre, 208 Queen's Road Central, Sheung Wan, Hong Kong ~72: LARRY M CONRAD;RICHARD L RICE~ 33:US ~31:16/598,937 ~32:10/10/2019;33:US ~31:17/000,571 ~32:24/08/2020

2023/04764 ~ Complete ~54:A METHOD FOR THE PRODUCTION OF HYDROGEN ~71:TYKHE TECH PTE. LTD., 38 Jalan Pemimpin #06-04, Singapore ~72: VUKSAN, Srecko~ 33:IL ~31:278192 ~32:20/10/2020

2023/04776 ~ Complete ~54:POLYPEPTIDE CONSTRUCTS BINDING TO CD3 ~71:Amgen Inc., One Amgen Center Drive, THOUSAND OAKS 91320-1799, CA, USA, United States of America;Amgen Research (Munich) GmbH, Staffelseestrasse 2, MUNICH 81477, GERMANY, Germany ~72: GHATTYVENKATAKRISHNA, Pavan;HOFFMANN, Patrick;HUH, Joon Hoi;KANAPURAM, Sekhar;KLINGER, Matthias;MCAULEY, Arnold;MUENZ, Markus;NAEGELE, Virgine;RAU, Doris;RAUM, Tobias;WINKEL, Lisa~ 33:US ~31:63/110,545 ~32:06/11/2020

2023/04743 ~ Complete ~54:A BALANCED PRODUCTION METHOD FOR GEESE THROUGHOUT THE YEAR ~71:Yangzhou University, 88 South Daxue Road, Yangzhou, Jiangsu Province, 225009, People's Republic of China ~72: Haiming YANG;Qianwen YANG;Yajun MIAO;Zhi YANG;Zhiyue WANG~

2023/04749 ~ Complete ~54:ELDERLY-ORIENTED ANTI-FALLING AND ANTI-DROWNING BIONIC JACKET AND ITS METHOD ~71:Anhui Polytechnic University, Beijing Middle Road, Wuhu City, Anhui Province, People's Republic of China;Anhui Suli Technology Co., Ltd, No. 16, Yongzhen Road, Wuhu District, China (Anhui) Pilot Free Trade Zone, Jiujiang District, Wuhu City, Anhui Province, People's Republic of China ~72: LING Xue;PAN Wei;SU Zhaowei;WANG Gangyu;WANG Peng;WANG Zhiheng;WEI Yuhui;XIE Yuanyuan;YU Enyi;YUAN Huifen;ZHANG Zhenlin~

2023/04756 ~ Complete ~54:FLUID TREATMENT APPARATUS ~71:Seoul Viosys Co., Ltd., 1B-36, 65-16, Sandan-ro 163beon-gil, Danwon-gu, ANSAN-SI 15429, GYEONGGI-DO, REPUBLIC OF KOREA, Republic of Korea ~72: CHOI, Jae-Young;JEONG, Jae-Hak;JEONG, Woong-Ki;JUNG, Sang-Wook~ 33:KR ~31:10-2017-0088694 ~32:12/07/2017;33:KR ~31:10-2017-0127702 ~32:29/09/2017

2023/04760 ~ Complete ~54:AN AUTOMATIC GOAF PLUGGING DEVICE AND CONSTRUCTION METHOD AND APPLICATION METHOD THEREOF ~71:Changsha Institute of Mining Research, Co., Ltd, No. 343, South Lu Shan Road, Yuelu District, Changsha, Hunan Province, People's Republic of China ~72: Chang Liu;Cong Huang;Guanglu Qi;Guanying Lv;Huansha He;Liang Zhao;Min Qin;Ruifeng Ma;Weiming Li;Yuning Guo;Zeyang Guo;Zhen Li~ 33:CN ~31:2022110331325 ~32:26/08/2022

2023/04761 ~ Complete ~54:APPLICATION OF TEGASEROD MALEATE IN TREATMENT OF ACUTE MYELOCYTIC LEUKEMIA AND COLORECTAL CANCER ~71:CHEN, Zhanghui, City Holiday, Lvhua Road, Economic and Technological Development Zone Zhanjiang, People's Republic of China;GAO, Xiangwei, No. 866, Yuhangtang Road, Xihu District Hangzhou, People's Republic of China;HONG, Yunguang, No. 2, Wenming East Road, Xiashan District Zhanjiang, People's Republic of China ~72: CHEN, Zhanghui;GAO, Xiangwei;HONG, Yunguang~ 33:CN ~31:202110037295.X ~32:12/01/2021

2023/04763 ~ Complete ~54:FORMULATIONS OF AZOBENZENE PHOTOREACTIVE COMPOUNDS ~71:BAYON THERAPEUTICS, INC., 341 N Sierra Ave., Solana Beach, United States of America;THE REGENTS OF THE UNIVERSITY OF CALIFORNIA, 1111 Franklin Street, 12th Floor, United States of America ~72: CAO, Kevin;GUKASYAN, Hovhannes;KRAMER, Richard H.;STREM, Brian M.~ 33:US ~31:63/106,297 ~32:27/10/2020

2023/04770 ~ Complete ~54:METHOD OF PRODUCING A NANOFLUID USING LASER ABLATION, CORRESPONDING NANOFLUID AND LASER ABLATION SYSTEM FOR MANUFACTURING NANOFLUIDS ~71:UNIVERSITY OF SOUTH AFRICA, 1 PRELLER STREET MUCKLENEUK RIDGE, South Africa ~72: KHAMLICH, SALEH;MAAZA, MALEK~ 33:ZA ~31:2020/06082 ~32:01/10/2020

2023/04774 ~ Complete ~54:CARDIAC VALVE PROSTHESIS ~71:GrOwnValve GmbH, Sredzkistraße 6, BERLIN 10435, GERMANY, Germany ~72: SCHMITT, Boris~ 33:EP ~31:20213210.6 ~32:10/12/2020

2023/04786 ~ Complete ~54:CONSUMABLE CHIP, CONSUMABLES, IMAGE FORMING APPARATUS, AND IMAGE FORMING CONTROL METHOD ~71:ZHUHAI PANTUM ELECTRONICS CO., LTD., Building 02, Building 06, Building 08, No. 888, Shengping Avenue, People's Republic of China ~72: ZHANG, Hao~ 33:CN ~31:202011041998.1 ~32:28/09/2020

2023/04780 ~ Complete ~54:LENTIVIRAL VECTORS ENABLING ROUTING ANTIGENS TO MHC-II PATHWAY AND INDUCING CD4+ AND CD8+ T-CELL RESPONSES IN A HOST ~71:Theravectys, Bâtiment Pasteur Biotop, 28 rue du Docteur Roux, PARIS CEDEX 15 75724, FRANCE, France ~72: ANNA, François;BLANC, Catherine;CHARNEAU, Pierre;LOPEZ, Jodie;MAJLESSI, Laleh;MONCOQ, Fanny~ 33:EP ~31:20306235.1 ~32:16/10/2020

2023/04781 ~ Complete ~54:NOVEL ANTI-LILRB2 ANTIBODIES AND DERIVATIVE PRODUCTS ~71:Immune-Onc Therapeutics, Inc., 795 San Antonio Road, PALO ALTO 94303, CA, USA, United States of America ~72: COSTA, Maria Jose;HONG, Kyu Hee;LIAO, X. Charlene;MA, Jing-Tyan;MCCUTCHEON, Krista;SONG, An;STAFFORD, Ryan;TIAN, Hongyu~ 33:US ~31:63/094,354 ~32:21/10/2020;33:US ~31:63/110,317 ~32:05/11/2020

2023/04782 ~ Complete ~54:ADJUSTABLE BASE ELEMENT FOR FURNITURE FOR LYING ON, AND FURNITURE FOR LYING ON ~71:bett1.de GmbH, Tauentzienstr. 11, BERLIN 10789, GERMANY, Germany ~72: SZPYT, Adam Roman~ 33:EP ~31:20201189.6 ~32:09/10/2020

2023/04787 ~ Complete ~54:ANTI-BETACELLULIN ANTIBODIES, FRAGMENTS THEREOF, AND MULTI-SPECIFIC BINDING MOLECULES ~71:NOVARTIS AG, Lichtstrasse 35, Switzerland ~72: BIGELOW, Chad Eric;CARRION, Ana Maria;CHASTAIN, James Edgar;CLARK, Kirk Lee;ETEMAD-GILBERTSON, Bijan Alexandre;GHOSH, Joy Gispati;HANKS, Shawn Michael;HAUBST, Nicole;IYER, Ganesh Rajan;MOKER, Nina;NGUYEN, Andrew Anh;POOR, Stephen Hendrick;QIU, Yubin;RANGASWAMY, Nalini Velamur;STEFANIDAKIS, Michael;TOKSOZ, Engin;TWAROG, Michael Zbigniew~ 33:US ~31:63/052,789 ~32:16/07/2020;33:US ~31:63/156,709 ~32:04/03/2021

2023/04746 ~ Complete ~54:BREEDING SPRAYING DEVICE ~71:MOUTAI INSTITUTE, Luban Avenue, Renhuai City, People's Republic of China ~72: LI, Qiong;LIU, Wei~ 33:CN ~31:202211001179.3 ~32:19/08/2022

2023/04753 ~ Complete ~54:MARKING DEVICE FOR DESIGN DRAWINGS OF RURAL PLANNING ~71:Anhui Science And Technology University, No.9 Donghua Road, Fengyang County, Chuzhou City, Anhui Province, People's Republic of China ~72: Ma keli;Yuan chenchen~ 33:CN ~31:2023103661293 ~32:04/04/2023

2023/04755 ~ Complete ~54:A ROCK-SOIL DETECTION DEVICE FOR ENGINEERING GEOLOGICAL SURVEY ~71:East China University of Technology, No. 418 Guanglan Avenue, Economic Development Zone, Nanchang City, Jiangxi Province, People's Republic of China ~72: Chen Lei;Duan Baofu;Ju Peijiao;Luo Wenshu;Lv Dao;Zeng Jianpeng;Zeng Xingfu;Zhang Shuo;Zhang Yaqian;Zhang Zilu~

2023/04757 ~ Complete ~54:A MINE SUPPORT WELDED MESH SYSTEM ~71:MINEABLE CONCEPTS (PTY) LTD, 653 Silver Valley Estate, Falls Road, Krugersdorp, 1739, South Africa ~72: OBAKENG RAKUMAKOE~ 33:ZA ~31:2022/05353 ~32:16/05/2022

2023/04766 ~ Complete ~54:COATED MEDICAL PRODUCT ~71:HEMOTEQ AG, Adenauerstrasse 15, 52146, Würselen, Germany ~72: ERIKA HOFFMANN;GÜNTER MATHAR;MICHAEL HOFFMANN~ 33:EP ~31:20207915.8 ~32:16/11/2020;33:EP ~31:21197295.5 ~32:16/09/2021

2023/04772 ~ Complete ~54:INTRA PREDICTION USING ENHANCED INTERPOLATION FILTERS ~71:QUALCOMM Incorporated, ATTN: International IP Administration, 5775 Morehouse Drive, SAN DIEGO 92121-1714, CA, USA, United States of America ~72: KARCZEWICZ, Marta;RAY, Bappaditya;SEREGIN, Vadim~ 33:US ~31:63/129,437 ~32:22/12/2020;33:US ~31:17/645,024 ~32:17/12/2021

. - APPLIED ON 2023/04/26 -

2023/04794 ~ Complete ~54:A SUBATOMOSPHERIC PRESSURE SALIVA-SUCTION DEVICE FOR ORAL MEDICINE TREATMENT ~71:Central South University, No.932 Lushan South Road, Yuelu District, Changsha City, Hunan Province, 410006, People's Republic of China ~72: Li Xu;Minmin Chen~

2023/04808 ~ Complete ~54:NICOTINIC ACID DERIVATIVE B HAVING ANTI-INFLAMMATORY AND IMMUNOSUPPRESSIVE ACTIVITY, AND USE THEREOF ~71:CHONGQING ACADEMY OF CHINESE MATERIA MEDICA, Wang Haijun No.34 Nanshan Road, Nan An, Chongqing, 400065, People's Republic of China ~72: GUO, Yanlei;YANG, Dajian;YANG, Yong~

2023/04814 ~ Complete ~54:PHARMACEUTICAL COMPOSITION COMPRISING ANTIBODY-DRUG CONJUGATE, AND USE OF PHARMACEUTICAL COMPOSITION ~71:JIANGSU HENGRUI PHARMACEUTICALS CO., LTD., No.7 Kunlunshan Road, Economic and Technological Development Zone, Lianyungang, Jiangsu, 222047, People's Republic of China;SHANGHAI HENGRUI PHARMACEUTICAL CO., LTD., No. 279 Wenjing Road, Minhang District, Shanghai, 200245, People's Republic of China ~72: TINGTING WU;XUN LIU;ZHIWAN WANG~ 33:CN ~31:202011061863.1 ~32:30/09/2020;33:CN ~31:202111069020.0 ~32:13/09/2021

2023/04796 ~ Complete ~54:CARTON BLANK ERECTOR AND FEEDING AND SHUTTLE MACHINE ~71:KLIKLOK LLC, 5224 Snapfinger Woods Drive, Decatur, Georgia, 30035, United States of America ~72: JOHN PATE;KEVIN GODDEN~ 33:US ~31:62/840,066 ~32:29/04/2019

2023/04788 ~ Provisional ~54:COOLANT RESERVOIR AND COOLANT RESERVOIR FILLING SYSTEM ~71:BSSC RADIATORS (PTY) LTD, 20 Turf Road, Anderbolt, Boksburg, 1459, Republic of South Africa, South Africa ~72: BENNETT, Dillan, Martin~

2023/04791 ~ Complete ~54:AN ADJUSTABLE SOLAR BRACKET WITH A PROTECTIVE FUNCTION ~71:Shihezi University, 221 North 4th Road, Shihezi, Xinjiang Uygur Autonomous Region, 832003, People's Republic of China;Xinjiang Hengchuang Guanggu Energy Co., LTD., No. 253, Lane 8 South, North Huizhan Road, Shuimogou District, Urumqi City, Xinjiang Uygur Autonomous Region, 830092, People's Republic of China ~72: Dezhen LI;Jinmei KOU;Junyi ZHANG;Lichun ZHU;Qian ZHANG;Shuangquan XIE;Wenxin YANG;Xuhai YANG;Zhihua GENG~

2023/04804 ~ Complete ~54:COMMUNICATION DEVICE AND COMMUNICATION METHOD ~71:PANASONIC INTELLECTUAL PROPERTY CORPORATION OF AMERICA, 2050 W 190TH STREET SUITE 450, TORRANCE, CA90504, USA, United States of America ~72: IWAI, Takashi;MIURA, Taichi;NAKANO, Takayuki;TAKATA, Tomofumi;URABE, Yoshio~ 33:JP ~31:2020-180361 ~32:28/10/2020

2023/04807 ~ Complete ~54:NICOTINIC ACID DERIVATIVE A HAVING ANTI-INFLAMMATORY ACTIVITY AND ANTI-PLATELET AGGREGATION ACTIVITY, AND APPLICATION THEREOF ~71:CHONGQING ACADEMY OF CHINESE MATERIA MEDICA, WANG, Haijun No.34 Nanshan Road, Nan'an District, Chongqing, 400065, People's Republic of China ~72: GUO, Yanlei;YANG, Dajian;YANG, Yong~

2023/04810 ~ Complete ~54:DEVICE FOR CONDUCTING A CHEMICAL REACTION IN A PROCESS FLUID IN A PRODUCTION FACILITY ~71:BASF SE, Carl-Bosch-Str. 38, Germany;LINDE GMBH, Dr.-Carl-von-Linde-

Strasse 6-14, Germany ~72: DELHOMME-NEUDECKER, Clara;FLEISCHMANN, Niklas;HOFSTÄTTER, Martin;JENNE, Eric;KOCHENDÖRFER, Kiara Aenne;POSSELT, Heinz;SHUSTOV, Andrey;STARK, Torsten;STILL, Werner Josef~ 33:EP ~31:20198807.8 ~32:28/09/2020

2023/04812 ~ Complete ~54:PHARMACEUTICAL COMPOSITION FOR PREVENTING OR TREATING VIRAL PERIVAGINAL DISEASE ~71:KINOPHARMA, INC., Nihonbashi Life Science Building 2, 3-11-5 Nihonbashi-honcho, Chuo-ku, Tokyo, 1030023, Japan ~72: HIROSHI ONOGI;KATSUHIKO SATO;TETSUO YAMAGUCHI~ 33:JP ~31:2020-180339 ~32:28/10/2020

2023/04818 ~ Complete ~54:METHODS AND COMPOSITIONS FOR TREATMENT OF LUPUS ~71:MACROGENICS, INC., 9704 Medical Center Drive, Rockville, Maryland, 20850, United States of America;PROVENTION BIO, INC., 55 Broad Street, 2nd Floor, Red Bank, New Jersey 07701, United States of America ~72: FRANCISCO LEON;PAUL DUNFORD;PAUL MOORE~ 33:US ~31:63/108,406 ~32:01/11/2020

2023/04826 ~ Complete ~54:METHOD FOR ENCODING AND DECODING A MULTI-VIEW VIDEO ~71:Orange, 111, quai du Président Roosevelt, ISSY-LES-MOULINEAUX 92130, FRANCE, France ~72: CLARE, Gordon;GARUS, Patrick;HENRY, Félix~ 33:FR ~31:2009913 ~32:29/09/2020

2023/04832 ~ Complete ~54:COMBINATIONS OF TRIAZINONE HERBICIDES WITH SAFENERS ~71:UPL Corporation Limited, 5th Floor, Newport Building, Louis Pasteur Street, PORT LOUIS, MAURITIUS, Mauritius;UPL do Brasil Industria e Comercio de Insumos Agropecuarios S.A., Avenida Maeda, s/nº, Prédio Comercial, térreo, Distrito Industrial, ITUVERAVA 14500-000, BRAZIL, Brazil ~72: LENZ, Giuvan;SILVA, Ferdinando Marcos Lima~ 33:BR ~31:102020019865-3 ~32:28/09/2020

2023/04809 ~ Complete ~54:ELECTRIC VEHICLE CHARGING CONTROL APPARATUS AND METHOD ~71:CHANGCHUN JETTY AUTOMOTIVE TECHNOLOGY CO., LTD., No. 957, Shunda Road, High-Tech Development Zone, People's Republic of China ~72: WANG, Chao~ 33:CN ~31:202011233775.5 ~32:06/11/2020

2023/04797 ~ Complete ~54:PERSONAL PROTECTION EQUIPMENT NETWORK (PPE-N) ~71:ATTACHE HOLDINGS LLC, Montgomery, Texas, 77356, United States of America ~72: Alan Wesley DAVIS~ 33:US ~31:63/147,875 ~32:10/02/2021

2023/04802 ~ Complete ~54:DECORATIVE PANEL, AND COVERING OF SUCH DECORATIVE PANELS ~71:I4F LICENSING NV, Industriedijk 19, Belgium ~72: BOUCKÉ, Eddy Alberic~ 33:NL ~31:2026858 ~32:09/11/2020

2023/04803 ~ Complete ~54:THERMAL INTEGRATION OF AN ELECTRICALLY HEATED REACTOR ~71:BASF SE, CARL BOSCH STRASSE 38, 67056 LUDWIGSHAFEN AM RHEIN, GERMANY, Germany;LINDE GMBH, DR.-CARL-VON-LINDE-STRAßE 6-14, 82049 PULLACH, GERMANY, Germany ~72: JENNE, Eric;KOCHENDOERFER, Kiara, Aenne;SHUSTOV, Andrey~ 33:EP ~31:20199922.4 ~32:02/10/2020

2023/04828 ~ Complete ~54:FLUX-LIMITING POLYMER MEMBRANE ~71:F. Hoffmann-La Roche AG, Grenzacherstrasse 124, BASEL 4070, SWITZERLAND, Switzerland ~72: STECK, Alexander~ 33:EP ~31:20208847.2 ~32:20/11/2020

2023/04823 ~ Complete ~54:METHOD OF DETERMINING HAFNIUM CONTENT IN METALLIC ZIRCONIUM AND ALLOYS BASED THEREON ~71:AKTSIONERNOE OBSHCHESTVO "CHEPETSKIJ MEKHANICHESKIJ ZAVOD", ul. Belova, 7, Russian Federation;CHASTNOE UCHREZHDENIE PO OBESPECHENIYU NAUCHNOGO RAZVITIYA ATOMNOJ OTRASLI "NAUKA I INNOVACII", ul. #.

Ordynka, d. 24, et. 8, Russian Federation ~72: KARAVAEVA, Olga Alekseevna;VARKENTIN, Nikolaj Yakovlevich~ 33:RU ~31:2021102186 ~32:01/02/2021

2023/04830 ~ Complete ~54:TARGETING OF SRC-3 IN IMMUNE CELLS AS AN IMMUNOMODULATORY THERAPEUTIC FOR THE TREATMENT OF CANCER ~71:Baylor College of Medicine, One Baylor Plaza, HOUSTON 77030, TX, USA, United States of America ~72: DACSO, Clifford;GILAD, Yosef;HAN, Sang Jun;JAIN, Prashi;LONARD, David M.;NIKOLAI, Bryan;O'MALLEY, Bert W.~ 33:US ~31:63/106,770 ~32:28/10/2020

2023/04831 ~ Complete ~54:COMBINATIONS OF TRIAZOLONE HERBICIDES WITH SAFENERS ~71:UPL Corporation Limited, 5th Floor, Newport Building, Louis Pasteur Street, PORT LOUIS, MAURITIUS, Mauritius;UPL do Brasil Industria e Comercio de Insumos Agropecuarios S.A., Avenida Maeda, s/nº, Prédio Comercial, térreo, Distrito Industrial, ITUVERAVA 14500-000, BRAZIL, Brazil ~72: LENZ, Giuvan;SILVA, Ferdinando Marcos Lima~ 33:BR ~31:102020019868-8 ~32:28/09/2020

2023/04833 ~ Complete ~54:COMBINATIONS OF CHLOROACETANILIDE HERBICIDES WITH SAFENERS ~71:UPL Corporation Limited, 6th Floor, Suite 157B, Harbor Front Building, President John Kennedy Street, PORT LOUIS, MAURITIUS, Mauritius;UPL do Brasil Industria e Comercio de Insumos Agropecuarios S.A., Avenida Maeda, s/nº, Prédio Comercial, térreo, Distrito Industrial, ITUVERAVA 14500-000, BRAZIL, Brazil ~72: LENZ, Giuvan;SILVA, Ferdinando Marcos Lima~ 33:BR ~31:BR102020019866-1 ~32:28/09/2020

2023/04798 ~ Complete ~54:COMPOSITIONS AND METHODS FOR VACCINATION AGAINST NEISSERIA GONORRHOEAE ~71:OMVAX, INC,, 1700 Owens Street, Suite 515, United States of America ~72: GIUNTINI, Serena;MOE, Gregory~ 33:US ~31:63/104,819 ~32:23/10/2020

2023/04800 ~ Complete ~54:ACTIVE CANCER IMMUNOTHERAPY BY IMMUNE MODULATION VIA GLOBO SERIES ANTIGENS ~71:OBI PHARMA, INC., 19f., No. 3, Yuanqu, St. Nangang Dist. Taipei City, Taiwan, Province of China ~72: CHEN, I-Ju;HSIEH, Chang-Lin;LAI, Ming-Tain;LEE, Wei-Han;OU, Chien-Chih;TSAI, Chen-En;TSAO, Chun-Yen;YANG, Chueh-Hao;YU, Cheng-der, Tony~ 33:US ~31:63/116,015 ~32:19/11/2020

2023/04819 ~ Complete ~54:A HARD SURFACE CLEANING COMPOSITION ~71:UNILEVER GLOBAL IP LIMITED, Port Sunlight, Wirral, Merseyside, CH62 4ZD, United Kingdom ~72: JIJI PAUL KOTTUKAPALLY;MAHESHWARA SHIVA NAIK~ 33:EP ~31:20212141.4 ~32:07/12/2020

2023/04822 ~ Complete ~54:AQUEOUS ENERGY STORAGE SYSTEM FOR REDOX FLOW BATTERIES ~71:CMBLU ENERGY AG, Industriestrasse 19, Germany ~72: BAAL, Eduard;EKKERT, Olga;GEIGLE, Peter;HARTMANN, Markus Richard;KNEUSELS, Nis-Julian;LARIONOV, Evgeny;NEUMANN, Doris;SCHNEIDER, Christian;UNKRIG-BAU, Michael;WEDLER, Nils~ 33:EP ~31:PCT/EP2020/087871 ~32:24/12/2020

2023/04805 ~ Complete ~54:ELECTRIC VEHICLE CHARGING CONTROL APPARATUS ~71:CHANGCHUN JETTY AUTOMOTIVE TECHNOLOGY CO., LTD., No. 957, Shunda Road, High-tech Development Zone, People's Republic of China ~72: WANG, Chao~ 33:CN ~31:202022550159.4 ~32:06/11/2020

2023/04820 ~ Complete ~54:SKIN CLEANSING COMPOSITION ~71:UNILEVER GLOBAL IP LIMITED, Port Sunlight, Wirral, Merseyside, CH62 4ZD, United Kingdom ~72: SAIHONG SHENG;SUNXIN ZHU;YINGQING SUN;YIXUAN CAO~ 33:CN ~31:PCT/CN2020/133451 ~32:02/12/2020;33:EP ~31:21151535.8 ~32:14/01/2021

2023/04825 ~ Complete ~54:NOZZLE TIP FOR A SOLID FUEL BURNER ~71:General Electric Company, 1 River Road, SCHENECTADY 12345, NY, USA, United States of America ~72: GRZEBIEN, Kevin;LEWIS, John Childs;SMYTH, Kenneth Richard~ 33:US ~31:63/086,756 ~32:02/10/2020

2023/04821 ~ Complete ~54:AQUEOUS ALKALINE ABRASIVE CLEANING COMPOSITION ~71:UNILEVER GLOBAL IP LIMITED, Port Sunlight, Wirral, Merseyside, CH62 4ZD, United Kingdom ~72: ANDREW STEPHEN JAMIESON;GILES JAMES CROWLEY;LAURA LUPI;PAOLA BAGGI;TERESA LECCE~ 33:EP ~31:20206582.7 ~32:10/11/2020

2023/04827 ~ Complete ~54:VARIANT STAPHYLOCOCCUSAUREUS LUKA AND LUKB POLYPEPTIDES AND VACCINE COMPOSITIONS ~71:Janssen Pharmaceuticals, Inc., 1125 Trenton-Harbourton Rd., TITUSVILLE 08560, NJ, USA, United States of America;New York University, 70 Washington Square South, NEW YORK 10012, NY, USA, United States of America ~72: BUCKLEY, Peter T.;GEURTSEN, Jeroen;KONSTANTINOV, Sergey;LUO, Jinquan;MORROW, Brian;SOMANI, Sandeep;TORRES, Victor J.~ 33:US ~31:63/084,273 ~32:28/09/2020

2023/04801 ~ Complete ~54:CURRENT DETECTION CIRCUIT, CURRENT LEAKAGE DETECTION METHOD, AND CHARGING SYSTEM ~71:CHANGCHUN JETTY AUTOMOTIVE TECHNOLOGY CO.,LTD., No. 957, Shunda Road, High-tech Development Zone, Chaoyang District, People's Republic of China ~72: WANG, Chao~ 33:CN ~31:202011289085.1 ~32:17/11/2020

2023/04806 ~ Complete ~54:ELECTRIC VEHICLE CHARGING CONTROL METHOD AND APPARATUS ~71:CHANGCHUN JETTY AUTOMOTIVE TECHNOLOGY CO., LTD., 1st Floor, No. 957, Shunda Road, High-Tech Development Zone, People's Republic of China ~72: WANG, Chao~ 33:CN ~31:202011232789.5 ~32:06/11/2020

2023/04811 ~ Complete ~54:DEVICE AND METHOD FOR CONTROLLABLY CARRYING OUT A CHEMICAL REACTION ~71:BASF SE, Carl-Bosch-Str. 38, Germany;LINDE GMBH, Dr.-Carl-von-Linde-Strasse 6-14, Germany ~72: DELHOMME-NEUDECKER, Clara;FLEISCHMANN, Niklas;HOFSTÄTTER, Martin;JACOB, Reiner;JENNE, Eric;KÜHN, Heinz-Jürgen;KOCHENDÖRFER, Kiara Aenne;LAIB, Heinrich;LANG, Christian;POSSELT, Heinz;REISER, Peter;SHUSTOV, Andrey;STEGEMANN, Robert;WELLENHOFER, Anton;ZELLHUBER, Mathieu;ZIEGLER, Christian~ 33:EP ~31:20198794.8 ~32:28/09/2020

2023/04789 ~ Provisional ~54:CAP-SOC COMMERCE: A SHARED VALUE SYSTEM FOR JOB CREATION, ECONOMIC INCLUSION, AND SUSTAINABLE GROWTH IN SOUTH AFRICA. ~71:George Smith, 11 Vorster Place, South Africa ~72: George Smith~

2023/04790 ~ Complete ~54:A FRUIT AND VEGETABLE DRYING AND STORAGE DEVICE ~71:Shihezi Qihe Energy Saving Technology Co., LTD., 20314 Business Centre, No. 21 North 8th Road, Shihezi Development Zone, Shihezi, Xinjiang Uygur Autonomous Region, 832099, People's Republic of China;Shihezi University, 221 North 4th Road, Shihezi,, Xinjiang Uygur Autonomous Region, 832003, People's Republic of China ~72: Jinmei KOU;Junyi ZHANG;Lichun ZHU;Qian ZHANG;Shuangquan XIE;Wenxin YANG;Xinjun LIU;Xuhai YANG;Zhihua GENG~

2023/04815 ~ Complete ~54:ULTRASONIC SCALPEL HANDLE, ULTRASONIC SCALPEL AND ULTRASONIC SCALPEL SYSTEM ~71:ENSURGE MEDICAL (SUZHOU) CO., LTD., Unit 106, Building 1, No.9 West Suhong Road, Suzhou Industrial Park, Suzhou Area, China (Jiangsu) Pilot Free Trade Zone Suzhou, Jiangsu, 215000, People's Republic of China ~72: JUN ZHANG~ 33:CN ~31:202011212999.8 ~32:04/11/2020;33:CN ~31:202120458579.1 ~32:03/03/2021;33:CN ~31:202110721818.2 ~32:28/06/2021

2023/04824 ~ Complete ~54:A SYSTEM AND A METHOD FOR ASSEMBLING A PACKAGING ~71:Anheuser-Busch InBev S.A., Grand Place 1, BRUSSELS 1000, BELGIUM, Belgium ~72: CERPENTIER, Tim;DEKOCKER, Wim;DUPERRAY, Philippe Jean Marie;EYLENBOSCH, Ben;FERREIRA, Glenn;NARDUCCI, Annalisa;PEELMAN, Manu;PLATTEEUW, Kristof;ROMBAUT, David;THOMPSON, Keenan;TRIEST,

Frederik;VAN MOER, Tom;VANCOSTER, Roderik;VANHEUVERBEKE, Arne;VERCAUTEREN, Bjorn~ 33:BE ~31:2020/5773 ~32:29/10/2020

2023/04878 ~ Complete ~54:LIGHT EMISSION DEVICE ~71:SEOUL VIOSYS CO.,LTD., 65-16,Sandan-ro 163 beon-gil,Danwon-gu,Ansan-si, Gyeonggi-do,, Republic of Korea ~72: BAE,Hee Ho,;LEE,A Young;LEE,Chung Hoon;YOON,Yeong Min~ 33:US ~31:62/820,493 ~32:19/03/2019;33:US ~31:16/821,024 ~32:17/03/2020

2023/04793 ~ Complete ~54:ATMOSPHERIC PRESSURE PLASMA BRUSH DEVICE ~71:ANHUI UNIVERSITY OF TECHNOLOGY, No. 59, Hudong Road, Ma'anshan City, Anhui Province, 243002, People's Republic of China;Wuhu Technology and Innovation Research Institute, AHUT, Building B5, Wuhu High-tech Industrial Park, Zhongshan South Road, Yijiang District, Wuhu City, Anhui Province, 241000, People's Republic of China ~72: CHEN, Sile;LI, Meng;SHI, Liping;WANG, Tao;WANG, Xin;YANG, Weizhi~ 33:CN ~31:2022108650500 ~32:21/07/2022

2023/04799 ~ Complete ~54:CYCLOPENTATHIOPHENE CARBOXAMIDE DERIVATIVES AS PLATELET ACTIVATING FACTOR RECEPTOR ANTAGONISTS ~71:BOEHRINGER INGELHEIM INTERNATIONAL GMBH, Binger Strasse 173, Germany ~72: ECKHARDT, Matthias;KONTES, Ferenc;PRESTLE, Juergen;TAUTERMANN, Christofer, Siegfried;THOMAS, Leo;WIEDENMAYER, Dieter;WILLWACHER, Marina, Kristina~ 33:EP ~31:20207719.4 ~32:16/11/2020

2023/04816 ~ Complete ~54:COMPOUNDS AND THEIR USE IN TREATMENT OF TACHYKININ RECEPTOR MEDIATED DISORDERS ~71:EMBARK BIOTECH APS, Ole Maaløes Vej 3 2200 Copenhagen N, Denmark ~72: JAKOB BONDO HANSEN;JOHNNY MADSEN;MAGNUS BERNT FREDRIK GUSTAFSSON;OLIVIA MULVAD;WOUTER FREDERIK JOHAN HOGENDORF~ 33:EP ~31:20206509.0 ~32:09/11/2020

2023/04817 ~ Complete ~54:DEVICE AND METHOD FOR ALIGNING MAGNETIC OR MAGNETIZABLE PARTICLES, AND MACHINE FOR GENERATING OPTICALLY VARIABLE IMAGE ELEMENTS ~71:KOENIG & BAUER AG, Friedrich-Koenig-Str. 4, 97080, Würzburg, Germany ~72: EDWIN KREPS;EMMANUEL THONY~ 33:DE ~31:10 2020 125 727.9 ~32:01/10/2020;33:DE ~31:10 2020 125 728.7 ~32:01/10/2020

2023/04792 ~ Complete ~54:DEVICE AND METHOD CAPABLE OF ADJUSTING TREATMENT AREA OF PLASMA JETS ~71:ANHUI UNIVERSITY OF TECHNOLOGY, No. 59, Hudong Road, Ma'anshan City, Anhui Province, 243002, People's Republic of China;Wuhu Technology and Innovation Research Institute, AHUT, Building B5, Wuhu High-tech Industrial Park, Zhongshan South Road, Yijiang District, Wuhu City, Anhui Province, 241000, People's Republic of China ~72: CHEN, Sile;LI, Meng;SHI, Liping;WANG, Tao;WANG, Xin;YANG, Weizhi~ 33:CN ~31:202210876856X ~32:25/07/2022

2023/04795 ~ Complete ~54:MINIMAL SAPONIN ANALOGUES, SYNTHESIS AND USE THEREOF ~71:MEMORIAL SLOAN-KETTERING CANCER CENTRE, Office of Technology Development, 1275 York Avenue, Box 524, New York, New York, 10065, United States of America ~72: ALBERTO FERNANDEZ-TEJADA;DAVID Y GIN;DEREK S TAN;ERIC K CHEA;JASON S LEWIS;JEFFREY R GARDNER;NAGAVARAKISHORE PILLARSETTY~ 33:US ~31:62/005,302 ~32:30/05/2014

2023/04813 ~ Complete ~54:RECOMBINANT YEAST FOR THE PRODUCTION OF OLIGOPEPTIDE ~71:LESAFFRE ET COMPAGNIE, 41 rue Etienne Marcel, 75001, Paris, France ~72: AURO ROBERTO TAGLIANI;IMMACOLATA BUSIELLO;MATTEO GRIGIS;SIMONA DALY;STEFANO GALLIANI~ 33:IT ~31:102020000022846 ~32:28/09/2020

2023/04829 ~ Complete ~54:ANTI-GDF15 ANTIBODY AND A DOSAGE REGIMEN FOR THE TREATMENT OF CANCER ~71:CatalYm GmbH, Am Klopferspitz 19, PLANEGG-MARTINSRIED 82152, GERMANY, Germany;Julius-Maximilians-Universität Würzburg, Sanderring 2, WÜRZBURG 97070,

GERMANY, Germany ~72: HAAKE, Markus;JÖRG, Susanne;LE BRUN, Virginie;LEO, Eugen;WISCHHUSEN, Jörg~ 33:EP ~31:20206801.1 ~32:10/11/2020;33:EP ~31:21175107.8 ~32:20/05/2021;33:EP ~31:21196910.0 ~32:15/09/2021

. - APPLIED ON 2023/04/28 -

2023/04836 ~ Provisional ~54:GSM/GPS JAMMER ALARM SYSTEM ~71:Edmund Herbert, 38 Parrot Street, South Africa ~72: Edmund Herbert~

2023/04876 ~ Complete ~54:PORT IDENTIFICATION METHOD AND APPARATUS ~71:Huawei Technologies Co., Ltd., Huawei Administration Building, Bantian, Longgang District, SHENZHEN 518129, GUANGDONG, CHINA (P.R.C.), People's Republic of China ~72: DONG, Xiaolong;DONG, Zhenhua;JIN, Chao~ 33:CN ~31:202011183533.X ~32:29/10/2020

2023/04838 ~ Complete ~54:HAND-HELD SQUEEZABLE COSMETIC CONTAINER ~71:Hebei Chemical and Pharmaceutical College, No. 88 Fangxing Road, Yuhua District, Shijiazhuang City, Hebei Province, 050026, People's Republic of China ~72: ZHANG, Bin~

2023/04845 ~ Complete ~54:PHARMACEUTICAL COMPOSITION COMPRISING AN ANTIMICROBIAL AGENT AND METHOD FOR THE PREPARATION THEREOF ~71:PHARMATHEN S.A., 6 DERVENAKION STREET, 15351 PALLINI ATTIKIS, GREECE, Greece ~72: DRAGANOUDI, Christina;FOUSTERIS, Manolis;KALASKANI, Anastasia;KARAVAS, Evangelos;KOUTRI, Ioanna;KOUTRIS, Efthymios;SAMARA, Vasiliki~

2023/04848 ~ Complete ~54:A PREPARATION METHOD OF COMPOUND POWDER OF SINGHARANUT STEM ~71:Anqing Normal University, No.128, Linghu South Road, Anqing City, Anhui Province, 246011, People's Republic of China ~72: Conghu LI;Liangliang ZHU;Meifeng WANG;Wenjuan LI;Yan WU;Yiqing XU~

2023/04851 ~ Complete ~54:BUILDING MANAGEMENT SYSTEM AND METHOD ~71:Homii Life Style (Pty) Ltd, 40 Dr AB Xuma Street, Kwazulu Natal, 4001, SOUTH AFRICA, South Africa ~72: CHETTY, Leo~ 33:ZA ~31:2022/01264 ~32:27/01/2022

2023/04852 ~ Complete ~54:RADIO NETWORK PERFORMANCE OPTIMIZATION SYSTEM AND METHOD ~71:CHOWDHURY, Shomenath Roy, C-314, 1st Floor, Defence Colony, India ~72: CHOWDHURY, Shomenath Roy~ 33:IN ~31:202011047642 ~32:31/10/2020

2023/04865 ~ Complete ~54:COMPOSITIONS COMPRISING AN RNA GUIDE TARGETING B2M AND USES THEREOF ~71:ARBOR BIOTECHNOLOGIES, INC., 20 Acorn Park Drive, Tower 500, Cambridge, Massachusetts, 02140, United States of America ~72: JEFFREY RAYMOND HASWELL;NOAH MICHAEL JAKIMO;QUINTON NORMAN WESSELLS;TIA MARIE DITOMMASO~ 33:US ~31:63/107,869 ~32:30/10/2020;33:US ~31:63/252,719 ~32:06/10/2021

2023/04868 ~ Complete ~54:COMPOSITIONS COMPRISING AN RNA GUIDE TARGETING BCL11A AND USES THEREOF ~71:ARBOR BIOTECHNOLOGIES, INC., 20 Acorn Park Drive, Tower 500, Cambridge, Massachusetts, 02140, United States of America ~72: JEFFREY RAYMOND HASWELL;NOAH MICHAEL JAKIMO;QUINTON NORMAN WESSELLS;TIA MARIE DITOMMASO~ 33:US ~31:63/108,110 ~32:30/10/2020;33:US ~31:63/252,832 ~32:06/10/2021

2023/04844 ~ Complete ~54:ELONGATED WEB FOR COVERING AGRICULTURAL CULTIVATED PLANTS ~71:DAIOS, Asterios, F. Kokkinou 22A, Greece ~72: DAIOS, Dimitrios~ 33:EP ~31:22 174 887.4 ~32:23/05/2022;33:EP ~31:22 178 197.4 ~32:05/07/2022

2023/04857 ~ Complete ~54:AMPK ACTIVATORS AND METHODS OF USE THEREOF ~71:BIOVERATIV THERAPEUTICS INC., 225 Second Avenue, Waltham, Massachusetts, United States of America ~72: HARA, Yannis;RIMMELÉ, Pauline;SCHMOLL, Dieter~ 33:US ~31:63/085,179 ~32:30/09/2020;33:US ~31:63/212,343 ~32:18/06/2021

2023/04869 ~ Complete ~54:ORAL CARE WHITENING COMPOSITIONS ~71:Colgate-Palmolive Company, 300 Park Avenue, NEW YORK 10022, NY, USA, United States of America ~72: CHEN, Xiang;CHOPRA, Suman;FEI, Lin~ 33:US ~31:63/110,586 ~32:06/11/2020

2023/04873 ~ Complete ~54:STEEL PRODUCTION FROM IRON SMELT ~71:Primetals Technologies Austria GmbH, Turmstraße 44, LINZ 4031, AUSTRIA, Austria ~72: MILLNER, Robert;REIN, Norbert;WURM, Johann~ 33:EP ~31:20204857.5 ~32:30/10/2020

2023/04874 ~ Complete ~54:ANTI-TUMOR COMPOUND, AND PREPARATION METHOD THEREFOR AND USE THEREOF ~71:Duality Biologics (Suzhou) Co.,Ltd., Unit 1106, 868 Yinghua Road, Pudong New Area, SHANGHAI 201204, CHINA (P.R.C.), People's Republic of China ~72: HUA, Haiqing;LI, Bing;LI, Jian;LI, Xi;LIN, Shengchao;SHEN, Hongxia;ZHANG, Yu;ZHU, Zhongyuan~ 33:CN ~31:202011061580.7 ~32:30/09/2020

2023/04834 ~ Provisional ~54:NETWORKED PORTABLE GRID STABILISING SODIUM ION SECURE UPS ~71:OLIVER GEORGE HILTON, 4 Ascot Green, 1 Agnes Street, Mt Moreland, South Africa ~72: OLIVER GEORGE HILTON~

2023/04842 ~ Complete ~54:HIGH-YIELD METHOD FOR EXTRACTING SUPEROXIDE DISMUTASE FROM CORN ~71:Guangxi Aoguyuan Ecological Agricultural Technology Co., Ltd., Lot 9, Changshou Food Processing Park, Mengshan Industrial Concentration Zone, Guangxi, 546700, People's Republic of China ~72: GAO, Jianjun;ZHAN, Yonggong~

2023/04846 ~ Complete ~54:PLANTING METHOD OF CHESTNUT WITH HIGH DROUGHT RESISTANCE ~71:Shandong Institute of Pomology, No.66 Longtan Road, Tai'an City, Shandong Province, People's Republic of China ~72: SHEN Guangning;SUN Xiaoli;TIAN Shoule;WANG Jinping~

2023/04850 ~ Complete ~54:INTEGRATED RICE AND DUCK CULTIVATING METHOD IN WHOLE PLANTING PERIOD OF RICE ~71:INSTITUTE OF FOOD AND CROPS OF THE ACADEMY OF AGRICULTURAL SCIENCES OF YUNNAN PROVINCE, No. 2238, Beijing Road, Panlong District, Kunming City, Yunnan Province, People's Republic of China ~72: Guiquan ZHANG;Hua AN;Jianhua ZHANG;Sheping LI;Wei DENG;Xiaolin LI;Ying LV;Yuran XU~ 33:CN ~31:202211078350.0 ~32:05/09/2022

2023/04854 ~ Complete ~54:HERBAL COMPOSITION, METHOD FOR PREPARING SAME AND METHOD FOR PREVENTING OR TREATING VIRAL INFECTIONS BY ADMINISTERING THE SAME ~71:XIE LI PRODUCTS CO., LTD., 1F., No. 19, Aly. 7, Ln. 217, Sec. 3, Zhongxiao E. Rd., Taiwan (R.O.C) ~72: CHIANG, Chien-Yi;HO, Tsung-Jung;HUANG, Chih-Yang;LIM, Wai-Ling;LIN, Pi-Yu;LIN, Shinn-Zong;LIN, Yu-Jung;SHIBU, Marthandam Asokan;SHIH, Cheng-Yen~ 33:US ~31:63/124,939 ~32:14/12/2020

2023/04859 ~ Complete ~54:METHODS FOR PRODUCING REDUCED CARBON FOOTPRINT LIVESTOCK ~71:LOCUS SOLUTIONS IPCO, LLC, 30600 Aurora Road, Suite 180, United States of America ~72: ADAMS, Kent;FARMER, Sean;ZORNER, Paul~ 33:US ~31:63/108,392 ~32:01/11/2020;33:US ~31:63/119,284 ~32:30/11/2020

2023/04879 ~ Provisional ~54:TAXI RANK ORDER MANAGEMENT SYSTEM ~71:Munashe Mombo, 33 Casablanca Estate, 267 Van Heerden Rd Halfway Gardens, South Africa ~72: Nicholas Mike Dinhidza~

2023/04835 ~ Provisional ~54:SHOCK MITIGATING CAPSULE AND METHOD OF USING SAME ~71:CREOX (PTY) LTD., LIMEROC BUSINESS PARK, ERF 6 PEACH TREE EXT 23, Knoppieslaagte, South Africa ~72: DE VILLIERS, Lourens Francois;LOOCK, Johan;MOCKE, Roelof~

2023/04853 ~ Complete ~54:AUTONOMOUS ROOF BOLTER WITH SENSOR AND RELATED METHODS ~71:J.H. FLETCHER & CO., 402 High Street, P O Box 2187, United States of America ~72: MCQUERREY, Sean Joseph~ 33:US ~31:63/084,238 ~32:28/09/2020

2023/04858 ~ Complete ~54:INTERFACE DATA TRANSMISSION METHOD AND APPARATUS, ELECTRONIC DEVICE, AND STORAGE MEDIUM ~71:SHENZHEN NATIONAL ENGINEERING LABORATORY OF DIGITAL TELEVISION CO., LTD., Room 21A, Guoshi Building, No. 1801, Shahe West Road, Gaoxin Community, People's Republic of China ~72: CHANG, Lin;GONG, Jun;LI, Xinguo;WU, Yujie;XU, Linyu;YU, Xiaolong~ 33:CN ~31:202011465857.2 ~32:14/12/2020

2023/04840 ~ Complete ~54:STONE WALL REINFORCEMENT STRUCTURE, REINFORCED STONE WALL, STONE STRUCTURE HOUSE AND CONSTRUCTION METHOD ~71:Fujian Huidong Construction Engineering Co., Ltd, No. 126, Dongxing Street, Dongling Town, Hui'an County, Quanzhou, Fujian, 362100, People's Republic of China ~72: LIN, Ling;LIN, Xianzhi;WANG, Yumin;ZHANG, Hongtao;ZHANG, Zhirong~

2023/04843 ~ Complete ~54:A SIDE GUARDRAIL ~71:China Construction Second Engineering Bureau Shenzhen Construction Investment Development Co., Ltd, Room 2407-08, Chuangtou Mansion, No. 9 Tengfei Road, Longgang District, Shenzhen, People's Republic of China;THE FIRST CONSTRUCTION ENGINEERING COMPANY LTD. OF CHINA CONSTRUCTION SECOND ENGINEERING BUREAU, Floors 1-7, Building 1, Yard 9, Kechuang 4th Street, Beijing Economic and Technological Development Zone, Daxing District, Beijing, People's Republic of China ~72: Chi ZHANG;Kaimao XIAO;Mingqi LI;Sheng ZHAN;Yangzong XING~ 33:CN ~31:202221039032.9 ~32:28/04/2022

2023/04860 ~ Complete ~54:AUTONOMOUS OVERTAKING METHOD OF AUTONOMOUS VEHICLE AND SYSTEM THEREOF ~71:CHANG'AN UNIVERSITY, Middle Section Of South 2nd Ring Road, Yanta District, Xi'an, Shaanxi, 710061, People's Republic of China ~72: GE, Tian;GUAN, Tian;HAN, Yi;WANG, Haisen;WANG, Siyu;ZHOU, Wenliang~ 33:CN ~31:202111606064.2 ~32:25/12/2021

2023/04864 ~ Complete ~54:COMPOSITIONS COMPRISING AN RNA GUIDE TARGETING TRAC AND USES THEREOF ~71:ARBOR BIOTECHNOLOGIES, INC., 20 Acorn Park Drive, Tower 500, Cambridge, Massachusetts, 02140, United States of America ~72: JEFFREY RAYMOND HASWELL;NOAH MICHAEL JAKIMO;QUINTON NORMAN WESSELLS;TIA MARIE DITOMMASO~ 33:US ~31:63/107,932 ~32:30/10/2020;33:US ~31:63/252,833 ~32:06/10/2021

2023/04872 ~ Complete ~54:ANTI-SCLEROSTIN CONSTRUCTS AND USES THEREOF ~71:Angitia BioMedicines Limited, Room 803, Lippo Sun Plaza, 28 Canton Road, Tsim Sha Tsui, Kowloon, HONG KONG, CHINA (P.R.C.), People's Republic of China ~72: KE, Hua Zhu;LI, Muyu;LIU, Kunfeng;LIU, Xiaofeng;YUAN, Baozhi~ 33:IB ~31:2020/118387 ~32:28/09/2020

2023/04877 ~ Complete ~54:RECOMBINANT ADENO-ASSOCIATED VIRUSES WITH ENHANCED LIVER TROPISM AND USES THEREOF ~71:BEIJING SOLOBIO GENETECHNOLOGY CO., LTD., Room 401, Building 5, No. 36, Jinghai Er Road, People's Republic of China ~72: WANG, Chao;ZHANG, Tingting~ 33:CN ~31:PCT/CN2020/129001 ~32:16/11/2020

2023/04837 ~ Complete ~54:BOTTLE BLOW-MOLDING DEVICE ALLOWING COSMETIC BOTTLES TO BE FIXED CONVENIENTLY ~71:Hebei Chemical and Pharmaceutical College, No. 88 Fangxing Road, Yuhua District, Shijiazhuang City, Hebei Province, 050026, People's Republic of China ~72: ZHANG, Bin~

2023/04863 ~ Complete ~54:HERBICIDAL COMPOSITION COMPRISING BENTAZONE AND APPLICATION THEREOF ~71:INSTITUTE FOR THE CONTROL OF AGROCHEMICALS OF SHANDONG PROVINCE (SHANDONG PROVINCE AGROCHEMICALS QUALITY INSPECTION STATION), No. 200, Gongye Bei Road, Licheng District, Jinan, Shandong 250131, People's Republic of China;QINGDAO KINGAGROOT CROPSCIENCE CO., LTD., No.53, Qinglonghe Road, Huangdao District, Qingdao, Shandong 266000, People's Republic of China ~72: CHUANJIE GAO;PENG WANG;PINGSHENG LI;QI CUI;RONGQUAN ZHANG;SHUANG CHEN;TAO JIN;XINGTAO LU;YAN JIN;YAOZHONG ZHANG~ 33:CN ~31:202210242010.0 ~32:11/03/2022

2023/04866 ~ Complete ~54:COMPOSITIONS COMPRISING AN RNA GUIDE TARGETING PDCD1 AND USES THEREOF ~71:ARBOR BIOTECHNOLOGIES, INC., 20 Acorn Park Drive, Tower 500, Cambridge, Massachusetts, 02140, United States of America ~72: JEFFREY RAYMOND HASWELL;NOAH MICHAEL JAKIMO;QUINTON NORMAN WESSELLS;TIA MARIE DITOMMASO~ 33:US ~31:63/108,053 ~32:30/10/2020;33:US ~31:63/252,835 ~32:06/10/2021

2023/04871 ~ Complete ~54:ANTI-FOULING UNIT AND METHOD OF APPLYING A PLURALITY OF ANTI-FOULING UNITS TO A SURFACE ~71:Koninklijke Philips N.V., High Tech Campus 52, EINDHOVEN 5656 AG, THE NETHERLANDS, Netherlands ~72: HIETBRINK, Roelant Boudewijn;SALTERS, Bart Andre~ 33:EP ~31:20199835.8 ~32:02/10/2020;33:EP ~31:20199843.2 ~32:02/10/2020

2023/04875 ~ Complete ~54:APPARATUS AND METHOD FOR FEEDING AND PREHEATING A METAL CHARGE IN A MELTING FURNACE ~71:Danieli & C. Officine Meccaniche S.p.A., Via Nazionale, 41, BUTTRIO 33042, ITALY, Italy ~72: BURIN, Paolo;RONDINI, Nicola;SCUBLA, Stefano~ 33:IT ~31:102020000022990 ~32:29/09/2020

2023/04841 ~ Complete ~54:CALCULATION METHOD FOR FARMLAND IRRIGATION PROBABILITY INDEX BASED ON CROP WATER INDICATION LINES ~71:Hohai University, No. 8 Focheng West Road, Jiangning District, Nanjing City, Jiangsu Province, 211100, People's Republic of China ~72: Li FENG;Shunying WANG;Yan WANG;Yanan ZHOU~ 33:CN ~31:2022106289170 ~32:06/06/2022

2023/04847 ~ Complete ~54:EXCAVATION AND DUST REMOVAL ROBOT FOR COAL MINE ROADWAY ~71:ANHUI UNIVERSITY OF SCIENCE AND TECHNOLOGY, NO.168 TAIFENG STREET, HUAINAN CITY, People's Republic of China ~72: PAN, Tong;WANG, Zhaoguo;ZHOU, Jie~

2023/04855 ~ Complete ~54:PHARMACEUTICAL FORMULATIONS ~71:THERACOSBIO, LLC, 225 Cedar Hill Street, Suite 200, United States of America ~72: CAI, Qiuhua;CHAU, Joseph Ho-Lun;DAI, Chunfeng;DHALL, Vipan;DONG, Fuxia;HADD, Michael J.;PATIL, Vinay;SEED, Brian;SHAH, Rina;SHRIVASTAVA, Ankit;WANG, Feng~ 33:CN ~31:PCT/CN2020/119816 ~32:05/10/2020

2023/04867 ~ Complete ~54:METHOD FOR MANUFACTURING A HOUSING ENCLOSING A PYROTECHNIC LOAD ~71:EURENCO, 26 Allée des Saules, Sorgues, 84700, France ~72: CÉDRIC GALVAN;JEAN-LUC CRESPY~ 33:FR ~31:FR2011291 ~32:04/11/2020

2023/04870 ~ Complete ~54:BIODEGRADABLE TOP MEMBRANE FOR A BEVERAGE CAPSULE ~71:Société des Produits Nestlé S.A., Avenue Nestlé 55, VEVEY 1800, SWITZERLAND, Switzerland ~72: BOURG, Violette;NEILL, Colin Gardner;ZEBOUDJ, Lise~ 33:EP ~31:20200094.9 ~32:05/10/2020

2023/04839 ~ Complete ~54:A MICROBIAL AGENT FOR PROMOTING FAT DEPOSITION AND ITS SEPARATION METHOD AND APPLICATION ~71:Hunan Agricultural University, No.1 Nongda Road, Furong District, Changsha City, Hunan Province, 410128, People's Republic of China ~72: Jie MA;Jie YIN;Jun TAN;Siting XIA;Tiejun LI;Xingguo HUANG;Yulong YIN~

2023/04849 ~ Complete ~54:A ROXBURGH ROSE FLAVOR BEVERAGE AND A PREPARATION METHOD THEREOF ~71:LIUPANSHUI NORMAL UNIVERSITY, No. 288 Minghu Road, Zhongshan District, Liupanshui City, Guizhou Province, 553004, People's Republic of China ~72: HE, Bin;HUANG, Yacheng;LIU, Linya~

2023/04856 ~ Complete ~54:METHODS FOR PURIFICATION OF MESSENGER RNA ~71:TRANSLATE BIO, INC., 200 West Street, Waltham, MA, United States of America ~72: ABYSALH, Jonathan;DEROSA, Frank;SMITH, Cameron;VARGAS, Jorel, E~ 33:US ~31:63/086,095 ~32:01/10/2020

2023/04861 ~ Complete ~54:OLIGONUCLEIC ACID CONJUGATE ~71:SUMITOMO PHARMA CO., LTD., 6-8, Doshomachi 2-chome, Chuo-ku, Osaka-shi, Osaka, 5410045, Japan ~72: AKIHIRO UESAKA;MASASHI TAKEDA;NAOKI MAKITA~ 33:JP ~31:2020-171447 ~32:09/10/2020

2023/04862 ~ Complete ~54:HERBICIDAL COMPOSITION AND APPLICATION THEREOF ~71:INSTITUTE FOR THE CONTROL OF AGROCHEMICALS OF SHANDONG PROVINCE (SHANDONG PROVINCE AGROCHEMICALS QUALITY INSPECTION STATION), No. 200, Gongye Bei Road, Licheng District, Jinan, Shandong 250131, People's Republic of China;QINGDAO KINGAGROOT CROPSCIENCE CO., LTD., No.53, Qinglonghe Road, Huangdao District, Qingdao, Shandong 266000, People's Republic of China ~72: CHUANJIE GAO;GUIBING CHI;PENG WANG;PINGSHENG LI;QI CUI;SHUANG CHEN;TAO JIN;XIANGYANG LI;XINGTAO LU;YAOZHONG ZHANG~ 33:CN ~31:202210241773.3 ~32:11/03/2022

. - APPLIED ON 2023/05/02 -

2023/04882 ~ Provisional ~54:PLANT GUIDE ENGINEERING COURSE FOR ENGINEERS ~71:Mondli Goodman Zondi, 1 Farrar, South Africa ~72: Mondli Goodman Zondi~

2023/04889 ~ Complete ~54:A SYSTEM AND METHOD FOR EVALUATING THE FRESHNESS OF FRUITS USING MACHINE LEARNING TECHNIQUES ~71:Dr. Hari Vasudevan, Dwarkadas J Sanghvi College of Engineering, Maharashtra, 400056, Mumbai, India;Dr. Kriti Srivastava, Dwarkadas J Sanghvi College of Engineering, Maharashtra, 400056, Mumbai, India;Hardik Gupta, Dwarkadas J Sanghvi College of Engineering, Maharashtra, 400056, Mumbai, India;Jainam Rajput, Dwarkadas J Sanghvi College of Engineering, Maharashtra, 400056, Mumbai, India;Jash Chintan Bhatia, Dwarkadas J Sanghvi College of Engineering, Maharashtra, 400056, Mumbai, India;Pradnya Saval, Dwarkadas J Sanghvi College of Engineering, Maharashtra, 400056, Mumbai, India ~72: Dr. Hari Vasudevan;Dr. Kriti Srivastava;Hardik Gupta;Jainam Rajput;Jash Chintan Bhatia;Pradnya Saval~

2023/04895 ~ Complete ~54:CATALYST SYSTEM FOR A FLOW REACTOR AND METHOD FOR CATALYTIC OXIDATION OF AMMONIA ~71:HERAEUS DEUTSCHLAND GMBH & CO. KG, Heraeusstraße 12 – 14, Germany ~72: HESSE, Jens;HIRSCHEL, Pasca;JANTSCH, Uwe;MAIER, Dirk~ 33:EP ~31:22175270.2 ~32:25/05/2022

2023/04899 ~ Complete ~54:ANTI-CD48 ANTIBODIES, ANTIBODY DRUG CONJUGATES, AND USES THEREOF ~71:NOVARTIS AG, Lichtstrasse 35, Switzerland ~72: D'ALESSIO, Joseph Anthony;KLINTER, Claudia Judith;MUNDT, Cornelia Anne;NEWCOMBE, Richard Vaughan;SCHWEIGHOFFER, Tamás;WINKELBACH, Katharina~ 33:US ~31:63/117,817 ~32:24/11/2020

2023/04913 ~ Complete ~54:ANTI-SIGLEC-8 ANTIBODY FORMULATIONS ~71:ALLAKOS INC., 825 Industrial Road, Suite 500, San Carlos, California, 94070, United States of America ~72: DAN YOUEL;RUBY CASARENO~ 33:US ~31:63/104,436 ~32:22/10/2020

2023/04921 ~ Complete ~54:SUBSTITUTED 6-AZABENZIMIDAZOLE COMPOUNDS AS HPK1 INHIBITORS ~71:GILEAD SCIENCES, INC., 333 LAKESIDE DRIVE, FOSTER CITY, United States of America ~72: BALAN,

GAYATRI;BARTLETT, MARK J.;CHANDRASEKHAR, JAYARAMAN;CODELLI, JULIAN A.;CONWAY, JOHN H.;COSMAN, JENNIFER L.;KALLA, RAO V.;KASUN, ZACHARY A.;KIM, MUSONG;LEE, SEUNG H.;LO, JENNIFER R.;LOYER-DREW, JENNIFER A.;MITCHELL, SCOTT A.;PERRY, THAO D.;PHILLIPS, GARY B.;SALVO, PATRICK J.;SWAMINATHAN, SUNDARAMOORTHI;VAN VELDHUIZEN, JOSHUA J.;YEUNG, SUET C.;ZABLOCKI, JEFF~ 33:US ~31:62/753,339 ~32:31/10/2018;33:US ~31:62/868,550 ~32:28/06/2019

2023/04885 ~ Provisional ~54:MY EASYGLOW ~71:Carlie Lubbe, 25 Hillcrest avenue, South Africa ~72: Carlie Lubbe~

2023/04887 ~ Complete ~54:TREATMENT OF SKIN MARKS AND SCARS ~71:HASSEN, Mohammed Ameen, 1315 Illovo Central, 70 Melville Road, Illovo, Johannesburg 2196, Gauteng, SOUTH AFRICA, South Africa ~72: HASSEN, Rafeek~ 33:ZA ~31:2022/06596 ~32:15/06/2022

2023/04891 ~ Complete ~54:GUIDE APPARATUS FOR DISPLACING A SUBMERSIBLE PUMP SYSTEM ~71:SPEARPOINT ENGINEERING (PTY) LIMITED, 564 SECTION C, KWAMHLANGA VILLAGE, KWAMHLANGA, 1022, South Africa ~72: ZWANE, Elias Vusi~ 33:ZA ~31:2022/04686 ~32:28/04/2022;33:ZA ~31:2022/08608 ~32:02/08/2022

2023/04897 ~ Complete ~54:METHOD FOR LASER HARDENING A SUBSTANTIALLY CYLINDRICAL SURFACE OF A WORKPIECE ~71:FIMBINGER, Johann, Triesterstr. 363, Austria ~72: FIMBINGER, Johann~ 33:DE ~31:10 2020 127 991.4 ~32:23/10/2020

2023/04912 ~ Complete ~54:COMPUTER-IMPLEMENTED MONITORING METHODS AND SYSTEMS FOR A PLANT PRODUCING CHEMICALS AND FUELS UTILIZING CARBON CAPTURE ~71:TOPSOE A/S, Haldor Topsøes Allé 1, 2800, Kgs. Lyngby, Denmark ~72: ANDERS ERIK BOJSEN;FIE ALICE HALLKVIST WILBEK;HENRIK WOLTHERS RASMUSSEN;LIV HOVGAARD;MATHIAS BØJE MADSEN;OLE FREJ ALKILDE;PRIYESH THAKKER;SYLVAIN VERDIER;THOR GALLARDO~ 33:US ~31:63/130,181 ~32:23/12/2020;33:US ~31:63/136,049 ~32:11/01/2021

2023/04955 ~ Complete ~54:METHOD OF ESTIMATING CUMULATIVE DAMAGE AND FATIGUE STRENGTH OF A VIBRATING MACHINE ~71:SCHENCK PROCESS AUSTRALIA PTY LIMITED, 65 Epping Road, New South Wales 2113, Australia ~72: SULTAN QURRAIE, Safa;TEYHAN, Douglas Robert;WOODWARD, Jack~ 33:AU ~31:2020903451 ~32:25/09/2020

2023/04909 ~ Complete ~54:METHOD FOR PRODUCING RADIOACTIVE ZIRCONIUM COMPLEX ~71:NIHON MEDI-PHYSICS CO., LTD., 3-4-10, Shinsuna, Koto-ku, Tokyo, 1360075, Japan ~72: AKIHIRO IZAWA;HIDEAKI TAKEMORI;HIROAKI ICHIKAWA;MINORU KAWATANI;TOMOYUKI IMAI~ 33:JP ~31:2020-177566 ~32:22/10/2020

2023/04914 ~ Complete ~54:A MOULD FOR FORMING A UNITARY ARTICLE FROM PULP ~71:DIAGEO GREAT BRITAIN LIMITED, 16 Great Marlborough Street, London, W1F 7HS, United Kingdom ~72: ADAM RICHARD TURNER;JONATHAN MORRIS;JOSHUA LANZON-MILLER;NATASHA WILSON~ 33:GB ~31:2017432.2 ~32:04/11/2020;33:GB ~31:2019305.8 ~32:08/12/2020

2023/04894 ~ Complete ~54:ANTI-SIRPA ANTIBODIES AND METHODS OF USE THEREOF ~71:ALECTOR LLC, 131 Oyster Point Blvd, Suite 600, South San Francisco, California, 94080, United States of America ~72: ANDREW PINCETIC;ARNON ROSENTHAL;PATRICIA CULP;WEI-HSIEN HO~ 33:US ~31:62/676,813 ~32:25/05/2018

2023/04903 ~ Complete ~54:HERBICIDAL DERIVATIVES ~71:Syngenta Crop Protection AG, Rosentalstrasse 67, BASEL 4058, SWITZERLAND, Switzerland ~72: BURNS, David;DALE, Suzanna;EMMETT, Edward John;MORRIS, James Alan;SEDEN, Peter Timothy;WHALLEY, Louisa~ 33:GB ~31:2018994.0 ~32:02/12/2020

2023/04906 ~ Complete ~54:METHOD FOR PRODUCING A METAL CONTAINER ~71:Ardagh Metal Packaging Europe GmbH, Grafenauweg 4, ZUG 6300, SWITZERLAND, Switzerland ~72: VAN DAM, Willem Leendert Pieter~ 33:DE ~31:10 2020 129 484.0 ~32:09/11/2020

2023/04892 ~ Complete ~54:METHOD FOR GENERATING A PALM IMAGE BASED ON PARTIAL IMAGES OF A PALM ~71:Idemia Identity & Security France, 2 place Samuel de Champlain, COURBEVOIE 92400, FRANCE, France ~72: KAZDAGHLI, Laurent;MABYALAHT, Guy~ 33:FR ~31:2204184 ~32:03/05/2022

2023/04908 ~ Complete ~54:FLOW BATTERY STATE OF HEALTH INDICATOR ~71:INVINITY ENERGY SYSTEMS (IRELAND) LIMITED, 22 Northumberland Road Ballsbridge, Ireland ~72: LYONS, Phil;MCDERMOTT, Jack;REID, Daniel;WHITEHEAD, Adam~ 33:GB ~31:2016639.3 ~32:20/10/2020

2023/04911 ~ Complete ~54:CONCRETE SHEAR WALL VERTICAL CONNECTION JOINT AND MANUFACTURING AND INSTALLATION METHOD THEREFOR ~71:NANTONG VOCATIONAL UNIVERSITY, No. 89, Youth Middle Road, Nantong, Jiangsu, 226001, People's Republic of China ~72: HUA SHEN;LILI MA~ 33:CN ~31:202111162613.1 ~32:30/09/2021

2023/04883 ~ Provisional ~54:A METHOD AND APPARATUS FOR COMBATTING OZONE DEPLETION ~71:VAN ZYL, Hendrik Jacobus, Farm Excelsior, BETHLEHEM 9700, SOUTH AFRICA, South Africa ~72: VAN ZYL, Hendrik Jacobus~

2023/04888 ~ Complete ~54:TREATMENT OF SKIN BLEMISHES ~71:HASSEN, Mohammed Ameen, 1315 Illovo Central, 70 Melville Road, Illovo, Johannesburg 2196, Gauteng, SOUTH AFRICA, South Africa ~72: HASSEN, Rafeek~ 33:ZA ~31:2022/06597 ~32:15/06/2022

2023/04893 ~ Complete ~54:CONSTRAINED CONDITIONALLY ACTIVATED BINDING PROTEINS ~71:MAVERICK THERAPEUTICS, INC., 3260 B Bayshore Blvd., 1st Floor, Brisbane, California, 94005, United States of America ~72: ANAND PANCHAL;CHAD MAY;MAIA VINOGRADOVA;ROBERT B DUBRIDGE~ 33:US ~31:62/555,943 ~32:08/09/2017;33:US ~31:62/586,627 ~32:15/11/2017;33:US ~31:62/587,318 ~32:16/11/2017

2023/04900 ~ Complete ~54:IMMUNOTHERAPY FOR THE TREATMENT OF CANCER ~71:TARGIMMUNE THERAPEUTICS AG, HOCHBERGERSTR. 60C, 4057 BASEL, SWITZERLAND, Switzerland ~72: BAJIC, Davor;BROKA, Derrick;KITAS, Eric;POMBO-VILLAR, Esteban;SCHADE, Babette;ZIGLER, Maya~ 33:EP ~31:20200835.5 ~32:08/10/2020

2023/04902 ~ Complete ~54:HANDLING OF DATA TRANSMISSION ~71:NOKIA TECHNOLOGIES OY, KARAKAARI 7, 02610 ESPOO, FINLAND, Finland ~72: KOSKINEN, Jussi-Pekka;LASELVA, Daniela;PRATAS, Nuno;TURTINEN, Samuli~ 33:US ~31:63/089,312 ~32:08/10/2020

2023/04905 ~ Complete ~54:METHOD FOR MANUFACTURING A MOLD FOR A CARDIAC VALVE PROSTHESIS ~71:GrOwnValve GmbH, Sredzkistraße 6, BERLIN 10435, GERMANY, Germany ~72: SCHMITT, Boris~ 33:EP ~31:20213219.7 ~32:10/12/2020

2023/04881 ~ Provisional ~54:A MONITORING SYSTEM ~71:JACIR, Usama, VILLA 112, DEEMA 2, THE LAKES, DUBAI, UNITED ARAB EMIRATES, United Arab Emirates ~72: AL NASHASH, Ruba Hasan Awad;BADRAN, Ahmed Ali Abdulhalim;JACIR, Usama;PYNN, Calvin Roland~

2023/04886 ~ Complete ~54:PREFABRICATED PARTITION WALL STRUCTURE AND INSTALLATION METHOD FOR HIGH-PERFORMANCE GRAIN STORAGE ~71:FCEC Prefabricated Building Research Institute Company Limited, 17th Floor, Building 4, Luzhuang Tingyuan West Second Ring North Road, Gulou District, Fuzhou Fujian, 350000, People's Republic of China ~72: Peitao XU;Siyuan CHI;Yu REN;Zhenshan LIN~ 33:CN ~31:202210476939.X ~32:02/05/2022

2023/04896 ~ Complete ~54:LINEAR DISPLACEMENT TRANSDUCER ~71:SCHENCK PROCESS AUSTRALIA PTY LIMITED, 65 Epping Road, New South Wales 2113, Australia ~72: MILEWICZ, Mariusz;WOODWARD, Jack~ 33:AU ~31:2020903452 ~32:25/09/2020

2023/04907 ~ Complete ~54:TRANSDERMAL INSULIN FORMULATIONS AND METHODS OF USE THEREOF ~71:TRANSDERMAL DELIVERY SOLUTIONS CORP. (D.B.A. HYPOSPRAY PHARMA), 4400 PGA Boulevard, Suite 304, United States of America ~72: ALAM, Chandan A.S.;KIRBY, Kenneth B.;VON NEHRING, Gordon~ 33:US ~31:63/346,022 ~32:26/05/2022

2023/04904 ~ Complete ~54:MINE VEHICLE AUTONOMOUS DRIVE CONTROL ~71:Sandvik Mining and Construction Oy, Pihtisulunkatu 9, TAMPERE 33330, FINLAND, Finland ~72: IVARSSON, Björn;LEHTINEN, Antti;SCHMIDT, Fredrik~

2023/04915 ~ Complete ~54:A SYSTEM AND METHOD FOR FORMING A MOULDED ARTICLE ~71:DIAGEO GREAT BRITAIN LIMITED, 16 Great Marlborough Street, London, W1F 7HS, United Kingdom ~72: ADAM RICHARD TURNER;AMY JOANNE KING;ANDREW WILLIAM NORFOLK;ANTONY ROBIN BURNESS;BENJAMIN RHYS WILLIAMS;JONATHAN MORRIS;JOSHUA LANZON-MILLER;NATASHA WILSON;PAUL CLIFFORD SMITH;RUPERT ANTHONY BARTON~ 33:GB ~31:2017432.2 ~32:04/11/2020

2023/04916 ~ Provisional ~54:INSURANCE PRODUCT FOR BANK CUSTOMERS TO BE INSURED AGAINST POSSIBLE THEFT OF MONEY STOLEN FROM BANK ACCOUNT ~71:MELANIE SHEN, P.O BOX 2426, HILLCREST, 2 BELL CLOSE,, South Africa ~72: MELANIE SHEN~

2023/04898 ~ Complete ~54:CEACAM5 ANTIBODY-DRUG CONJUGATE FORMULATION ~71:SANOFI, 46 Avenue de la Grande, France ~72: AUTHELIN, Jean-René;BENSAID, Fethi;BONESTEBE, Audrey;HUILLE, Sylvain;LEMAN, Marie;MANACHE-ALBERICI, Lucie~ 33:EP ~31:20315449.7 ~32:10/11/2020

2023/04901 ~ Complete ~54:COMPOSITIONS AND METHODS FOR SIMULTANEOUSLY MODULATING EXPRESSION OF GENES ~71:VERSAMEB AG, HOCHBERGERSTR. 60C, 4057 BASEL, SWITZERLAND, Switzerland ~72: HILLMANN-WÜLLNER, Petra;METZGER, Friedrich;SCHAFFHAUSER, Hervé;SELVARAJ, Justin, Antony;ZUIDEVELD, Klaas, Pieter~ 33:US ~31:63/087,643 ~32:05/10/2020;33:US ~31:63/213,841 ~32:23/06/2021

2023/04910 ~ Complete ~54:METHOD FOR PRODUCING RADIOACTIVE ZIRCONIUM COMPLEX ~71:NIHON MEDI-PHYSICS CO., LTD., 3-4-10, Shinsuna, Koto-ku, Tokyo, 1360075, Japan ~72: AKIHIRO IZAWA;HIROAKI ICHIKAWA;SATOSHI KISHIMOTO;TOMOYUKI IMAI~ 33:JP ~31:2020-177567 ~32:22/10/2020

2023/04880 ~ Provisional ~54:CUSTOMIZABLE SPICE SUBSCRIPTION BOX ~71:Kristian Edward Shaw, 70 Anemoon Estate, Kempton Park, Johannesburg, Gaueng, 1619, South Africa ~72: Kristian Edward Shaw~

2023/04884 ~ Provisional ~54:A COMPOSTING MACHINE ~71:FOOD 2050 TECHNOLOGIES (PTY) LTD, 17 FISH EAGLE STREET, SILVER LAKES GOLF ESTATE, PRETORIA, GAUTENG, 0081, SOUTH AFRICA, South Africa ~72: PIETERS, Tertius, Christiaan~

2023/04890 ~ Complete ~54:AN APPARATUS TO MELT PLASTIC AND A METHOD THEREOF ~71:S. SARAVANA PRIYA, 11/212 A, SECOND STREET, MUTHUMARI NAGAR, CHOCKALINGAPURAM POST, RAJAPALAYAM, VIRUDHUNAGAR DIST., TAMIL NADU, 626108, India;T. RAGHUNATHAN, 11/212 A, SECOND STREET, MUTHUMARI NAGAR, CHOCKALINGAPURAM POST, RAJAPALAYAM, VIRUDHUNAGAR DIST., TAMIL NADU, 626108, India ~72: S. SARAVANA PRIYA;T. RAGHUNATHAN~

. - APPLIED ON 2023/05/03 -

2023/04922 ~ Complete ~54:AN IOT BASED AGRICULTURAL ENVIRONMENTAL APPROACH BASED ON BIG DATA ANALYTICS WITH CONSTRAINED MONITORING ~71:Dr. Ashish Kumar, Professor, Department of Computer Science & Engineering, ITS Engineering College, Gautam Buddha Nagar, Uttar Pradesh, India;Dr. KM Baalamurugan, Assistant Professor, School of Computing Science and Engineering, Galgotias University, Uttar Pradesh, Greater Noida, India;Dr. Kashif Qureshi, Professor, Department of Computer Science & Engineering, Lingayas Vidyapeeth, Haryana, India;Dr. Venkateswaran R, Sr. Faulty - Networking and Information Security, Department of IT, College of Computing and Information Sciences, University of Technology and Applied Sciences- Salalah, Dhofar, Salalah, Oman;Dr.C.Balakrishna Moorthy, Senior Lecturer Department of Electrical Engineering, UTAS-Salalah, Dhofar, Oman;Dr.Gauri Kalnoor, Assistant Professor, Department of Computer Science and Engineering, B.M.S College of Engineering, Bengaluru, Karnataka, India;Mr. Rashmi Rathi Upadhyay, Assistant Professor, School of Computing Science and Engineering, Galgotias University, Greater Noida, Uttar Pradesh, India;Mr. Zatin Gupta, Assistant Professor, School of Computing Science and Engineering, Galgotias University, Uttar Pradesh, Greater Noida, India;Prakash B Metre, Assistant Professor, Department of Computer Science and Engineering, Presidency University, Bengaluru, Karnataka, India;Vijay Kumar Sharma, Professor, Department of Physics, Shyam Lal College, University of Delhi, Shahdara, East Delhi, New Delhi, India ~72: Dr. Ashish Kumar;Dr. KM Baalamurugan;Dr. Kashif Qureshi;Dr. Venkateswaran R;Dr.C.Balakrishna Moorthy;Dr.Gauri Kalnoor;Mr. Rashmi Rathi Upadhyay;Mr. Zatin Gupta;Prakash B Metre;Vijay Kumar Sharma~ 33:IN ~31:202341012528 ~32:23/02/2023

2023/04943 ~ Complete ~54:STOWING OF SOLAR POWER DEVICES ~71:Array Technologies, Inc., 3901 Midway Place NE, ALBUQUERQUE 87109, NM, USA, United States of America ~72: ANDERSEN, Todd;CREASY, Lucas;FUSARO, James;SHAH, Sanket;SHARP, Jon;STOSHAK, James John~ 33:US ~31:63/093,685 ~32:19/10/2020;33:US ~31:17/505,518 ~32:19/10/2021

2023/04929 ~ Complete ~54:SYSTEM AND METHOD FOR REPEATABLE ALIGNMENT OF BODILY TISSUE FOR PROGRAMME OF EXTERNAL RADIOTHERAPY TREATMENT ~71:POPOWSKI, Georg, Michel-Servet 16, Switzerland ~72: POPOWSKI, Georg~ 33:EP ~31:20209528.7 ~32:24/11/2020

2023/04933 ~ Complete ~54:PARTHENOCARPIC WATERMELON PLANTS ~71:NUNHEMS B.V., NAPOLEONSWEG 152, 6083 AB NUNHEM, NETHERLANDS, Netherlands ~72: HU, Courtney;MAZAHERI, Mona;PUGLISI, Daniel;SIRIZZOTTI, Alberto~ 33:EP ~31:20201337.1 ~32:12/10/2020;33:US ~31:63/111,898 ~32:10/11/2020;33:US ~31:63/117,223 ~32:23/11/2020

2023/04938 ~ Complete ~54:METHOD FOR SELECTIVE EXTRACTION OF GOLD BY NIACIN ~71:INDIAN INSTITUTE OF TECHNOLOGY MADRAS (IIT MADRAS), The Dean, Industrial Consultancy & Sponsored Research (ICSR), India ~72: ABHIJIT, Nag;THALAPPIL, Pradeep~ 33:IN ~31:202041047984 ~32:03/11/2020

2023/04919 ~ Provisional ~54:BLASTING ACCESSORIES ~71:FOURIE, Johan Jacques, 54 Gawie Theron Street, South Africa ~72: FOURIE, Johan Jacques~

2023/04926 ~ Complete ~54:OPTIMIZING AUDIO DELIVERY FOR VIRTUAL REALITY APPLICATIONS ~71:FRAUNHOFER-GESELLSCHAFT ZUR FÖRDERUNG DER ANGEWANDTEN FORSCHUNG E.V.,

Hansastrasse 27c, Germany ~72: AGNELLI, Matteo;CZELHAN, Bernd;FUCHS, Harald;HOFMANN, Ingo;MURTAZA, Adrian;PLOGSTIES, Jan~ 33:EP ~31:17196259.0 ~32:12/10/2017

2023/04932 ~ Complete ~54:MICROORGANISM HAVING ENHANCED L-GLUTAMINE PRODUCING ABILITY, AND L-GLUTAMINE PRODUCING METHOD USING SAME ~71:CJ CHEILJEDANG CORPORATION, 330, DONGHO-RO, JUNG-GU, SEOUL 04560, REP OF KOREA, Republic of Korea ~72: CHOI, Su Jin;LEE, Kwang Woo;YANG, Sunyoung~ 33:KR ~31:10-2020-0156903 ~32:20/11/2020

2023/04936 ~ Complete ~54:FASTENER BEDS FOR CONVEYOR BELT FASTENER APPLICATORS ~71:FLEXIBLE STEEL LACING COMPANY, 2525 Wisconsin Avenue, United States of America ~72: DANIELS, William J.;GAJJAR, Nekheel;WAWCZAK, William Robert~ 33:US ~31:63/106,816 ~32:28/10/2020;33:US ~31:17/100,490 ~32:20/11/2020

2023/04945 ~ Complete ~54:A CIRCULATING FLUIDIZED BED BOILER ~71:Sumitomo SHI FW Energia Oy, Metsänneidonkuja 10, ESPOO 02130, FINLAND, Finland ~72: FERDYN, Bartlomiej;GLOWICKI, Roger;SLUSZNIAK, Slawomir;SOLIPIWKO, Slawomir;WYKA, Krzysztof~ 33:FI ~31:20206271 ~32:09/12/2020

2023/04934 ~ Complete ~54:A SYSTEM AND A METHOD FOR A 24X7 SOLAR THERMAL-BASED ATMOSPHERIC WATER GENERATOR USING DESICCANTS ~71:URAVU LABS PRIVATE LIMITED, NO. 1B, 6TH CROSS, 5TH MAIN, SG PALYA, CV RAMAN NAGAR, BANGALORE - 560093, KARNATAKA, INDIA, India ~72: BALAKRISHNAN, Govinda, Balaji;GARG, Pardeep;RAJA, Venkatesh;SHRIVASTAV, Swapnil, Sangeet~ 33:IN ~31:202041028007 ~32:08/10/2020

2023/04942 ~ Complete ~54:METHODS FOR TREATING ATHEROSCLEROTIC CARDIOVASCULAR DISEASE WITH LPA-TARGETED RNAI CONSTRUCTS ~71:Amgen Inc., One Amgen Center Drive, THOUSAND OAKS 91320-1799, CA, USA, United States of America ~72: JONES, Zachary;KASSAHUN, Helina;SOHN, Winnie~ 33:US ~31:63/110,309 ~32:05/11/2020

2023/04920 ~ Provisional ~54:ARBITRAWALLET ~71:1111 Holdings Pty Ltd, Unit 3 Clearwater Office Park, Millennium Boulevard, Struben Valley, South Africa ~72: Edwin Thabo Letopa;Sakhile Matsimela~

2023/04924 ~ Complete ~54:COSMETIC PREPARATION CONTAINING ANISIC ACID AND LEVULINIC ACID, HAVING SELECTIVE ANTIMICROBIAL EFFECT ~71:Beiersdorf AG, Unnastraße 48, HAMBURG 20245, GERMANY, Germany ~72: AVILA, Luis Arturo Carbajal;BIERGIESSER, Helga;FÖLSTER, Heike;FIRYN, Andreas;GÖDDERTZ, Dominik;HAMANN, Tina;KÖRBL, Birthe;RICHTER, Daniel;SCHÖNDIENST, Petra;TRAUPE, Bernd;TREDE, Lucia Zanforlin~ 33:DE ~31:10 2019 217 898.7 ~32:20/11/2019;33:EP ~31:20194680.3 ~32:04/09/2020

2023/04940 ~ Complete ~54:FUNCTIONALIZED PLASMONIC NANOSTRUCTURES ~71:ILLUMINA CAMBRIDGE LIMITED, 19 Granta Park, Great Abington, Cambridge, Cambridgeshire, CB21 6DF, United Kingdom;ILLUMINA, INC., 5200 Illumina Way, San Diego, California, 92122, United States of America ~72: BRIAN D MATHER;GIANLUCA ANDREA ARTIOLI;MATHIEU LESSARD-VIGER;XAVIER VON HATTEN~ 33:US ~31:63/114,309 ~32:16/11/2020

2023/04917 ~ Provisional ~54:GROUNDING DEVICE ~71:TIMM, Troy Lance, 44 Goodman Street, Rynfield, South Africa ~72: TIMM, Troy Lance~

2023/04918 ~ Provisional ~54:MULTIPURPOSE FURNITURE APPLIANCE ~71:MCNAUGHTON, Elni, 26 Holmesdale Park, Coopers Hill Road, United Kingdom ~72: FRANKEN, Warren;MCNAUGHTON, Elni~

2023/04925 ~ Complete ~54:METHOD FOR COST-EFFECTIVE PRODUCTION OF ULTRAFINE SPHERICAL POWDERS AT LARGESCALE USING THRUSTER-ASSISTED PLASMA ATOMIZATION ~71:PYROGENESIS CANADA INC., 1744 rue William Montréal, Canada ~72: DORVAL DION, Christopher Alex;PROULX, François~ 33:US ~31:62/535,730 ~32:21/07/2017

2023/04944 ~ Complete ~54:APPARATUS AND METHOD FOR COATING SUBSTRATES WITH WASHCOATS ~71:Johnson Matthey Public Limited Company, 5th Floor, 25 Farringdon Street, LONDON EC4A 4AB, UNITED KINGDOM, United Kingdom ~72: MURUYANDY, Kumarasen~ 33:US ~31:63/199,393 ~32:23/12/2020

2023/04923 ~ Complete ~54:TAILGATE GAP COVER ~71:MULLER, Nico, 11 De Vos Street, Kleinmond, South Africa ~72: MULLER, Nico~

2023/04935 ~ Complete ~54:AN AEROSOL-FORMING SUBSTRATE ~71:PHILIP MORRIS PRODUCTS S.A., Quai Jeanrenaud 3, Switzerland ~72: GAMBS, Celine;VOLLMER, Jean-Yves~ 33:EP ~31:20200643.3 ~32:07/10/2020

2023/04937 ~ Complete ~54:DEVICE FOR REPRODUCABLE ALIGNMENT OF BODILY TISSUE FOR PROGRAMME OF EXTERNAL RADIOTHERAPY TREATMENT ~71:POPOWSKI, Georg, Michel-Servet 16, Switzerland ~72: POPOWSKI, Georg~ 33:EP ~31:20209534.5 ~32:24/11/2020

2023/04941 ~ Complete ~54:MOISTURE SEPARATOR UNIT OF MOISTURE SEPARATOR REHEATER ~71:Dongfang (Guangzhou) Heavy Machinery Co., Ltd., No. 313 Lianxi Road, Huangge, Nansha, GUANGZHOU 511455, GUANGDONG, CHINA (P.R.C.), People's Republic of China;Shanghai Nuclear Engineering Research & Design Institute Co., Ltd., No. 29 Hongcao Road, Xuhui District, SHANGHAI 200233, CHINA (P.R.C.), People's Republic of China ~72: CHEN, Qingqi;GU, Guoxing;JIAO, Ming;LI, Jinghuai;LIN, Shaoxuan;LIU, Liangliang;LIU, Xiaohong;SHI, Zhilong;SONG, Yinxi;YANG, Yaowu;YING, Bingbin;ZHENG, Huan;ZHOU, Dan~ 33:CN ~31:202011084252.9 ~32:12/10/2020

2023/04946 ~ Complete ~54:SOLID FORMULATION ~71:Janssen Pharmaceuticals, Inc., 1125 Trenton-Harbourton Rd., TITUSVILLE 08560, NJ, USA, United States of America ~72: ANDERSEN, Sune Klint;KIMPE, Kristof Leonard;RAVELINGIEN, Matthieu Jean M.;SOMERS, Ivan Henri M.;ZHU, Donghua~ 33:IB ~31:2020/126596 ~32:04/11/2020

2023/04927 ~ Complete ~54:AN ECONOMIC SOLAR WATER HEATER SYSTEM ~71:Dr. Dipankar Das, Mechanical Engineering Department, Dibrugarh University, Dibrugarh, Assam, 786004, India;Dr. Madhurjya Saikia, Mechanical Engineering Department, Dibrugarh University, Dibrugarh, Assam, 786004, India;Dr. Pranjal Sarmah, Mechanical Engineering Department, Dibrugarh University, Dibrugarh, Assam, 786004, India;Dr. Saroj Yadav, Mechanical Engineering Department, Dibrugarh University, Dibrugarh, Assam, 786004, India;Kamal Chandra Saikia, Milan Nagar road, P.O.: Jorhat (sadar), Jorhat, Assam, 785001, India;Rupam Deka, Mechanical Engineering Department, Dibrugarh University, Dibrugarh, Assam, 786004, India ~72: Dr. Dipankar Das;Dr. Madhurjya Saikia;Dr. Pranjal Sarmah;Dr. Saroj Yadav;Kamal Chandra Saikia;Rupam Deka~

2023/04930 ~ Complete ~54:TREATMENT OF PUBLIC SPEAKING ANXIETY WITH AN ALPHA-7 NICOTINIC ACETYLCHOLINE RECEPTOR AGONIST ~71:VANDA PHARMACEUTICALS INC., 2200 Pennsylvania Ave. NW, Suite 300E, United States of America ~72: HE, Yunsheng;POLYMEROPOULOS, Christos;POLYMEROPOULOS, Mihael~ 33:US ~31:63/118,121 ~32:25/11/2020;33:US ~31:63/118,132 ~32:25/11/2020;33:US ~31:63/158,449 ~32:09/03/2021

2023/04931 ~ Complete ~54:GLUTAMATE-CYSTEINE LIGASE VARIANT AND METHOD FOR PRODUCING GLUTATHIONE USING SAME ~71:CJ CHEILJEDANG CORPORATION, 330, DONGHO-RO, JUNG-GU, SEOUL

04560, REP OF KOREA, Republic of Korea ~72: HA, Cheol Woong;IM, Yeong Eun;KIM, Yeonsoo;YANG, Eun Bin~ 33:KR ~31:10-2021-0000361 ~32:04/01/2021

2023/04939 ~ Complete ~54:WEARABLE INSERTER FOR REPRODUCABLE ALIGNMENT OF BODILY TISSUE FOR PROGRAMME OF EXTERNAL RADIOTHERAPY TREATMENT ~71:POPOWSKI, Georg, Michel-Servet 16, Switzerland ~72: POPOWSKI, Georg~ 33:EP ~31:20209522.0 ~32:24/11/2020

2023/04928 ~ Complete ~54:A SYSTEM FOR DEVELOPING PHYTOSOMES LOADED POLYPHENOL DERIVED FROM MORINGA OLEIFERA LEAF TO TREAT CANCER ~71:Aaushi Pareek, Department of Pharmacy, Banasthali Vidyapith, Banasthali, Rajasthan, 304022, India;Ashutosh Pareek, Department of Pharmacy, Banasthali Vidyapith, Banasthali, Rajasthan, 304022, India;Dr. Anasuya Patil, Associate Professor, Department of Pharmaceutics, KLE College of Pharmacy, II Block, Rajajinagar, Bengaluru, Karnataka, 560 010, India;Dr. M. Venkata Ramana, Vagdevi College of Pharmacy, Gurazala Post, Guntur dist, Andhra Pradesh, 522415, India;Dr. Nayyar Parvez, Professor & HoD, School of Pharmacy, Sharda University, Plot No 32-34, Knowledge Park III, Greater Noida, Uttar Pradesh, 201310, India;Dr. P. Sailaja Rao, Professor and Head, Dept of Pharmacology, Teegala Ram Reddy College of Pharmacy (JNTUH affiliated), Meerpet, Hyderabad, Telangana, 500097, India;Dr. Sachinkumar Dnyaneshwar Gunjal, Department of Pharmaceutics, Amrutvahini College of pharmacy, Sangamner, Savitribai Phule Pune University, Maharashtra, 422605, India;Dr. Shyam Sunder V Pancholi, Professor, Ganpat University, Shree S K Patel College of Pharmacy, Gujarat, 384012, India;Prof. (Dr.) Varsha Deva, Glocal University pharmacy College, Behat, Saharanpur, Uttar Pradesh, 247121, India;Sana Butool, Assistant Professor, Department of Pharmacology, Teegala Ram Reddy College of Pharmacy, meerpet , Hyderabad, Telangana, 500097, India;Vivek Jain, Department of Pharmaceutical Sciences, Mohanlal Sukhadia University, Udaipur, Rajasthan, 313001, India ~72: Aaushi Pareek;Ashutosh Pareek;Dr. Anasuya Patil;Dr. M. Venkata Ramana;Dr. Nayyar Parvez;Dr. P. Sailaja Rao;Dr. Sachinkumar Dnyaneshwar Gunjal;Dr. Shyam Sunder V Pancholi;Prof. (Dr.) Varsha Deva;Sana Butool;Vivek Jain~

. - APPLIED ON 2023/05/04 -

2023/04960 ~ Complete ~54:COVALENT CONJUGATES OF THE SARS-COV-2 RECEPTOR-BINDING DOMAIN AND A CARRIER PROTEIN AND VACCINE COMPOSITIONS THAT CONTAIN THEM ~71:CENTRO DE INMUNOLOGÍA MOLECULAR, CALLE 216 ESQ. 15, ATABEY, PLAYA, LA HABANA, HABANA 11 300, CUBA, Cuba;INSTITUTO FINLAY DE VACUNAS, AVENIDA 21 ENTRE 198 Y 200, NÚMERO 19810, ATABEY, PLAYA, LA HABANA, C.P. 11600, CUBA, Cuba;UNIVERSIDAD DE LA HABANA, CALLE SAN LÁZARO Y L, PLAZA DE LA REVOLUCIÓN, LA HABANA 10400, CUBA, Cuba ~72: BOGGIANO AYO, Tammy;FERNÁNDEZ CASTILLO, Sonsire;GARCÍA RICARDO, Manuel;GARCÍA RIVERA, Dagmar;GARCÍA RIVERA, Daniel;OJITO MAGAZ, Eduardo;OLIVA HERNÁNDEZ, Reynaldo;RAMÍREZ GONZÁLEZ, Ubel Jesús;RODRÍGUEZ NODA, Laura Marta;SÁNCHEZ RAMÍREZ, Belinda;SANTANA MEDEROS, Darielys;VALDÉS BALBÍN, Yury;VEREZ BENCOMO, Vicente Guillermo~ 33:CU ~31:2020-0069 ~32:05/10/2020

2023/04964 ~ Complete ~54:METHODS OF TREATING HEART FAILURE BY ADMINISTERING OMECAMTIV MECARBIL ~71:Amgen Inc., One Amgen Center Drive, THOUSAND OAKS 91320-1799, CA, USA, United States of America;Cytokinetics, Inc., 350 Oyster Point Blvd, SOUTH SAN FRANCISCO 94080, CA, USA, United States of America ~72: HONARPOUR, Narimon;MALIK, Fady~ 33:US ~31:63/112,995 ~32:12/11/2020;33:US ~31:63/154,077 ~32:26/02/2021;33:US ~31:63/187,084 ~32:11/05/2021;33:US ~31:63/202,873 ~32:28/06/2021;33:US ~31:63/203,436 ~32:22/07/2021

2023/04950 ~ Provisional ~54:AXIAL FLOW VENTILATION FAN ~71:ADAPTIVE LOGIC SYSTEMS (PTY) LTD, 569 Retriever Street, South Africa ~72: RATNER, Gavin Charles;SNEDDEN, Glen Campbell~

2023/04966 ~ Complete ~54:N-(2-(4-CYANOTHIAZOLIDIN-3-YL)-2-OXOETHYL)- QUINOLINE-4-CARBOXAMIDES ~71:AstraZeneca AB, SÖDERTÄLJE SE-151 85, SWEDEN, Sweden ~72: BRÅNALT, Jonas;HOLM, Björn;JOHANSSON, Maria;KARLSSON, Olle;KNERR, Daniel Laurent;NORDQVIST, Anneli;SHEPPARD, Robert John;SWANSON, Marianne;TOMBERG, Anna~ 33:US ~31:63/126,593 ~32:17/12/2020

2023/04956 ~ Complete ~54:METHODS FOR OBTAINING ANTIBODIES THAT BIND TRANSMEMBRANE PROTEINS AND CELLS THAT PRODUCE THE SAME ~71:REGENERON PHARMACEUTICALS, INC., 777 Old Saw Mill River Road, Tarrytown, United States of America ~72: BABB, Robert;CHEN, Gang;FARR, Glen;LEE, Wen-Yi;SHI, Ergang;SUH, David~ 33:US ~31:63/130,044 ~32:23/12/2020

2023/04971 ~ Complete ~54:IMPROVED GENE THERAPY METHODS ~71:Homology Medicines, Inc., 1 Patriots Park, BEDFORD 01730, MA, USA, United States of America ~72: ILES-SOMARATNE, Janet Nancy~ 33:US ~31:63/110,257 ~32:05/11/2020

2023/04973 ~ Provisional ~54:CASUAL TOURING OF STEAM ENGINES AND CABINS ~71:HILTON BRIAN THOMAS, 309 THORA COURT, KITE STR, HORISON, South Africa ~72: HILTON BRIAN THOMAS ~

2023/04954 ~ Complete ~54:A ROXBURGH ROSE BEVERAGE WITH ANTIOXIDANT ACTIVITY AND A PREPARATION METHOD THEREOF ~71:LIUPANSHUI NORMAL UNIVERSITY, No. 288 Minghu Road, Zhongshan District, Liupanshui City, Guizhou Province, 553004, People's Republic of China ~72: HE, Bin;HUANG, Yacheng;LIU, Linya~

2023/04958 ~ Complete ~54:ENGINEERED CHIMERIC FUSION PROTEIN COMPOSITIONS AND METHODS OF USE THEREOF ~71:MYELOID THERAPEUTICS, INC., 300 Technology Square, Suite 203, United States of America ~72: GETTS, Daniel;MCCREEDY, Bruce, Jr.;WANG, Yuxiao~ 33:US ~31:63/109,445 ~32:04/11/2020;33:US ~31:63/162,205 ~32:17/03/2021;33:US ~31:63/196,994 ~32:04/06/2021;33:US ~31:63/251,400 ~32:01/10/2021

2023/04965 ~ Complete ~54:COMBINATION THERAPY FOR TREATING CANCER ~71:AstraZeneca AB, SÖDERTÄLJE SE-151 85, SWEDEN, Sweden ~72: LEO, Elisabetta~ 33:US ~31:63/089,195 ~32:08/10/2020

2023/04948 ~ Provisional ~54:DISTRIBUTION BOARD WITH INTEGRATED BACKUP POWER ~71:OOSTHUIZEN, Hendrik Jacobus, 1001 Bassoon Avenue, Mayers Estate No35, Radiokop, South Africa ~72: OOSTHUIZEN, Hendrik Jacobus~

2023/04953 ~ Complete ~54:A TAMPER-RESISTANT, LOCKING MECHANISM FOR A DOORED CONTAINER ~71:VILJOEN, Phillippus Rudolph, 213 Gouws Street,, South Africa ~72: VILJOEN, Phillippus Rudolph~ 33:ZA ~31:2022/04491 ~32:22/04/2022;33:ZA ~31:2023/03549 ~32:14/03/2023

2023/04961 ~ Complete ~54:METHODS, SYSTEMS, AND KITS FOR TREATMENT OF INFLAMMATORY DISEASES TARGETING TL1A ~71:CEDARS-SINAI MEDICAL CENTER, 8700 Beverly Blvd., Los Angeles, United States of America;PROMETHEUS BIOSCIENCES, INC., 3050 Science Park Road, United States of America ~72: BILSBOROUGH, Janine;DICKERSON, Cindy T.;KRUIDENIER, Laurens;LI, Dalin;MCGOVERN, Dermot P.;MCNEELEY, Patricia;REISSMAN, Matthew;ROJAS, Rafael;SABRIPOUR, Mahyar;WATKINS, Jeffry D.~ 33:US ~31:63/113,657 ~32:13/11/2020;33:US ~31:63/136,153 ~32:11/01/2021;33:US ~31:63/147,165 ~32:08/02/2021;33:US ~31:63/181,074 ~32:28/04/2021;33:US ~31:63/226,032 ~32:27/07/2021

2023/04949 ~ Provisional ~54:SUPPORT PROP ~71:ADAPTIVE LOGIC SYSTEMS (PTY) LTD, 569 Retriever Street, South Africa ~72: JACINTO, João Ribeiro;RATNER, Gavin Charles~

2023/04972 ~ Complete ~54:SAFETY BOOT ~71:CHARNAUD TECHNOLOGIES (PTY) LTD., 1 Pink Street, Ezakheni Industrial Estate, Ladysmith, Kwazulu Natal, 3381, South Africa ~72: ROBIN JOHN CHARNAUD~ 33:ZA ~31:2020/06864 ~32:04/11/2020

2023/04963 ~ Complete ~54:CRYSTALLINE FORMS OF A DEOXYCYTIDINE KINASE INHIBITOR AND USES THEREOF ~71:TRETHERA CORPORATION, 13547 Ventura Blvd., Ste. 363, United States of America ~72: LITZINGER, David;SCHULTZ, Kenneth A.~ 33:US ~31:63/108,803 ~32:02/11/2020;33:US ~31:63/190,107 ~32:18/05/2021

2023/04951 ~ Complete ~54:PRODUCTION METHOD OF SELENIUM-ENRICHED MUTTON ~71:Institute of animal husbandry and veterinary medicine, Ningxia Academy of agricultural and Forestry Sciences (Co., Ltd.), No.100 ningqin lane, middle Beijing Road, Jinfeng District, Yinchuan City, Ningxia Hui Autonomous Region, People's Republic of China;Ningxia Ningyang agriculture and Animal Husbandry Development Co. , Ltd., 600 meters west of Binhe Avenue, Lixin Village, Touzha town, Pingluo County, Shizuishan City, Ningxia Hui Autonomous Region, People's Republic of China ~72: LIU Fang;LIU Jinghua;MEI Ning'an;XIN Guosheng;YANG Guo~ 33:CN ~31:2023104127640 ~32:18/04/2023

2023/04959 ~ Complete ~54:AGGREGATE PROCESSING APPARATUS, SYSTEMS, AND METHODS ~71:SUPERIOR INDUSTRIES, LLC, 315 E Highway 28, Morris, United States of America ~72: BIBANCOS, Danilo;CROOKS, Mark;GORDON, Matthew;GRIMM, Lafe;PLATTNER, Troy;RODRIGUEZ, John~ 33:US ~31:63/109,513 ~32:04/11/2020

2023/04970 ~ Complete ~54:METHOD OF IRON ELECTRODE MANUFACTURE AND ARTICLES AND SYSTEMS THEREFROM ~71:Form Energy, Inc., 30 Dane Street, SOMERVILLE 02143, MA, USA, United States of America ~72: CHAKRABORTY, Rupak;CHEVRIER, Vincent;CHON, Michael;EISENACH, Rebecca Marie;GIBSON, Michael Andrew;LIOTTA, Andrew Haynes;MORGAN, Robert Wesley;NATION, Leah;PANTANO, Joseph Anthony;PERKINS, Nicholas Reed;SACHA, Valerie Christine;THOMAS-ALYEA, Karen;WEBER, Eric;WOODFORD, William Henry~ 33:US ~31:63/112,539 ~32:11/11/2020;33:US ~31:63/193,424 ~32:26/05/2021

2023/04947 ~ Provisional ~54:3D PRINT HEAD AND 3D PRINTING MACHINE ~71:MECHATECH ENGINEERING SOLUTIONS PTY LTD, 21 Richard Rd, Broadwood, Gqeberha, 6070, South Africa ~72: ALEXANDER BLAIR STUART MACFARLANE;CULLEN LEO GILFILLAN;LLOYD ERNEST HORRMANN;THABELO MAKGAPOLE BRILLIANT~

2023/04952 ~ Complete ~54:BOMB FUZE INITIATOR ~71:Junghans T2M SAS, Route d'Ardon, LA FERTE SAINT AUBIN 45240, FRANCE, France ~72: COUSINARD, Thierry~ 33:FR ~31:2204253 ~32:05/05/2022

2023/04957 ~ Complete ~54:MEMBRANE-BASED HYDROGEN PURIFIERS ~71:H2 POWERTECH LLC, 746 SE Glenwood Drive, Bend, United States of America ~72: HILL, Charles, R.~ 33:US ~31:17/107,523 ~32:30/11/2020

2023/04962 ~ Complete ~54:TRISPECIFIC BINDERS ~71:AFFIMED GMBH, Technologiepark, Im Neuenheimer Feld 582, Germany ~72: BREUNIG, Christian;DULAT, Holger;ELLWANGER, Kristina;FUCEK, Ivica;KOCH, Joachim;PAHL, Jens;PETERS, Eike;REUSCH, Uwe;ROSS, Thorsten;TESAR, Michael~ 33:EP ~31:20200845.4 ~32:08/10/2020

2023/04968 ~ Complete ~54:PROCESS FOR THE PRODUCTION OF A VINYL CHLORIDE-(METH)ACRYLATE COPOLYMER AND COMPOSITION COMPRISING SUCH A COPOLYMER ~71:Inovyn Europe Limited, PO Box 9, Bankes Lane Office, Bankes Lane, RUNCORN WA7 4JE, CHESHIRE, UNITED KINGDOM, United Kingdom ~72: HERMANT, Thomas~ 33:EP ~31:20207585.9 ~32:13/11/2020

2023/04974 ~ Provisional ~54:UNIQUE NUMBERS ~71:BONOLO PATRICK BANTOBETSE, 40 TEAROSE STREET, TERENURE EXTENSION 16,, South Africa ~72: BONOLO PATRICK BANTOBETSE~

2023/04969 ~ Complete ~54:COMPOSITIONS AND METHODS FOR TREATMENT OF BLEEDING DISORDERS ~71:Band Therapeutics, LLC, 8 Worcester Street, BELMONT 02478, MA, USA, United States of America ~72: GILBERT, James C.;ZHU, Shuhao~ 33:US ~31:63/117,545 ~32:24/11/2020;33:US ~31:63/155,012 ~32:01/03/2021;33:US ~31:63/216,601 ~32:30/06/2021

2023/04967 ~ Complete ~54:BOVINE ANTIBODY VARIANTS ~71:Zoetis Services LLC, 10 Sylvan Way, PARSIPPANY 07054, NJ, USA, United States of America ~72: BALLY, Alexander Pogacsas Ruhland;CAMPOS, Henry Luis;FICI, Gregory John;LIGHTLE, Sandra Ann Marie;SHANBHOGUE, Prajna;STRIETZEL, Catherine J.;ZHU, Yaqi~ 33:US ~31:63/116,491 ~32:20/11/2020

. - APPLIED ON 2023/05/05 -

2023/04975 ~ Provisional ~54:JOYSTICK WITH INDUCTIVE DISPLACEMENT SENSING ~71:AZOTEQ HOLDINGS LIMITED, c/o Spyrou Kyprianou Avenue 20, Chapo Central, Cyprus ~72: BRUWER, Frederick Johannes;RADEMEYER, Daniel Barend~

2023/04981 ~ Complete ~54:CURING SYSTEM FOR CONTINUOUS BEAM ~71:China Railway 21st Bureau Group Co.,Ltd, No. 921, Beibinhe West Road, Anning District, Lanzhou City, Gansu Province, 730070, People's Republic of China;The 2nd Engineering Co.,Ltd of China Railway 21st Bureau Group Co.,Ltd, No. 63, Heping Road, Chengguan District, Lanzhou City, Gansu Province, 730030, People's Republic of China ~72: CHEN, Bingzhang;HE, Wenjing;MENG, Wu;NIU, Hongmei;SUN, Fengpeng;XI, Pengfei;ZHU, Guansheng;ZHU, Jianqiang;ZHU, Tao~

2023/04985 ~ Complete ~54:ADJUSTABLE DRY ICE CLEANING MACHINE ~71:QINGDAO JURONG ENGINEERING TECHNOLOGY CO., LTD., Room 1506, Hualin Plaza, 117 Zijinshan Road, Huangdao District, Qingdao City, Shandong Province, People's Republic of China ~72: JINYU PENG;NINGNING LIU;PUXUN WANG;SON XIE;XIANGPENG QIN;YUNMAO SON;ZHENDONG GENG~

2023/04989 ~ Complete ~54:A WALKING MECHANISM AND DEICING DEVICE ~71:LIUPANSHUI NORMAL UNIVERSITY, Chaoyang New Village, Minghu Road, Liupanshui City, Guizhou Province, People's Republic of China ~72: ZHANG, Wanhe~

2023/04978 ~ Complete ~54:FREEZE-THAW RESISTANT ASPHALT MIXTURE, PREPARATION METHOD AND APPLICATION THEREOF ~71:Jilin Jianzhu University, No. 5088, Xincheng Street, Changchun City, Jilin Province, People's Republic of China ~72: GAO Chunmei;MA Lijun;QI Rui;TAO Meijing;TIAN Wei;WANG Huaipeng;WU Weijie;ZHANG Huzhu;ZHANG Xiying~

2023/04987 ~ Complete ~54:E7 PROTEIN SELF-HOME DETECTION CERVICAL BRUSH AND INSPECTION METHOD THEREFOR ~71:FAMID Biomedical Technology (Tianjin) Co., Ltd., 301B, Bldg 2,4 Haitai Fazhan Erlu Road Binhai High-Tech Huayuan Industrial Park, Tianjin, 300392, People's Republic of China ~72: JINCHAO MIAO~ 33:CN ~31:2022114756659 ~32:23/11/2022

2023/05001 ~ Complete ~54:DEVICE FOR GENERATING A JET OF TWO-PHASE FLUID ~71:ETAT FRANÇAIS REPRÉSENTÉ PAR LE PRÉFET DE POLICE, AGISSANT AU NOM ET POUR LE COMPTE DE LA VILLE DE PARIS, RELATIVEMENT À LA BRIGADE DE SAPEURS-POMPIERS DE PARIS, 1 Place Jules Renard, France;ZELUP, 38 rue de l'Université, France ~72: ISSLER, Thomas;TESTA, Fabian~ 33:FR ~31:FR2011157 ~32:30/10/2020

2023/05012 ~ Complete ~54:SYSTEM AND METHOD FOR THE ROBOTIC LOADING OF EXPLOSIVES IN UNDERGROUND MINING ~71:ENAEX SERVICIOS S.A., EL TROVADOR N° 4253, LAS CONDES, SANTIAGO, CHILE, South Africa ~72: BARRIGA MELGAREJO, Jonhatan;LARA MARRO, Gloria del Pilar;MIRANDA LORCA, Rodrigo;MORALES GARRIDO, Danko, Christian;PRADO FIGUEROA, Felipe Andrés;RUIZ HERNÁNDEZ, Marco, Antonio~

2023/05013 ~ Complete ~54:MILLIMETER WAVE RADAR-BASED NON-CONTACT REAL-TIME VITAL SIGN MONITORING SYSTEM AND METHOD ~71:CENTRAL CHINA NORMAL UNIVERSITY, No. 152 Luoyu Road, Hongshan District, Wuhan, Hubei, 430079, People's Republic of China ~72: DAI, Zhicheng;LIU, Sannyuya;YANG, Zongkai;ZHAO, Liang~ 33:CN ~31:202011301746.8 ~32:19/11/2020

2023/05023 ~ Complete ~54:PREPARATION METHOD FOR CANNFLAVIN COMPOUNDS ~71:DEYI PHARMACEUTICAL LTD., Room 916, Floor 9, Unit 2, Building 1-2, Hongshengda Yuexing Commercial Center, People's Republic of China ~72: DU, Yesong;LAN, Lan;LUO, Junlu;MOU, Hongtao;TAN, Xin;WANG, Shubin;ZHANG, Pingping~ 33:CN ~31:202011261866.X ~32:12/11/2020

2023/04979 ~ Complete ~54:PREPARATION METHOD FOR TERNARY TIN-BASED COMPOUND ANODE MATERIAL OF SODIUM-ION BATTERIES ~71:Taiyuan University of Technology, No. 79, Yingze West Street, Taiyuan City, Shanxi Province, 030000, People's Republic of China ~72: Huijun LI;Xiaomin WANG;Xiaoqin CHENG;Yongzhen WANG;Zhenxin ZHAO~ 33:CN ~31:2023103931771 ~32:13/04/2023

2023/04995 ~ Complete ~54:POSITIONING CONNECTION STRUCTURE OF A PREFABRICATED STRUCTURE ~71:THE FIRST CONSTRUCTION ENGINEERING COMPANY LTD. OF CHINA CONSTRUCTION SECOND ENGINEERING BUREAU, Floors 1-7, Building 1, Yard 9, Kechuang 4th Street, Beijing Economic and Technological Development Zone, Daxing District, Beijing, People's Republic of China ~72: AN, WEIDONG;HE, QUAN;LI, ZELAN;SUN, YUANXIA;WANG, JIAN;WEI, XUEQI;YIN, HAISONG;ZHANG, CHANGHONG~ 33:CN ~31:202221506805.X ~32:16/06/2022

2023/04983 ~ Complete ~54:ORAL LIQUID CONTAINING FISH PROTEOLYTIC POLYPEPTIDE SOLUTION ~71:Weihai Ocean Vocational College, No.1000 Haiwan South Road, Rongcheng City, Weihai City, Shandong Province, 264300, People's Republic of China ~72: NIE Xiaowei~

2023/04986 ~ Complete ~54:A DETECTION BOX FOR DETECTING AN ANTIBODY ANTIGEN BY USING A CERVICAL CANCER E7 PROTEIN AND A DETECTION METHOD THEREOF ~71:FAMID Biomedical Technology (Tianjin) Co., Ltd., 301B, Bldg 2,4 Haitai Fazhan Erlu Road Binhai High-Tech Huayuan Industrial Park, Tianjin, 300392, People's Republic of China ~72: JINCHAO MIAO~ 33:CN ~31:2022114770552 ~32:23/11/2022

2023/04993 ~ Complete ~54:A FAST POSITIONING DEVICE FOR ANCHOR BARS OF EMBEDDED PARTS OF COMPLEX NODES ~71:THE FIRST CONSTRUCTION ENGINEERING COMPANY LTD. OF CHINA CONSTRUCTION SECOND ENGINEERING BUREAU, Floors 1-7, Building 1, Yard 9, Kechuang 4th Street, Beijing Economic and Technological Development Zone, Daxing District, Beijing, People's Republic of China ~72: BIN ZHANG;DA LI;HAISONG YIN;XUEMEI LIU;YUANJUN ZHANG;ZELAN LI;ZHONGYANG YU~ 33:CN ~31:202222479379.1 ~32:19/09/2022

2023/04997 ~ Complete ~54:A FIXING AUXILIARY MECHANISM FOR CONSTRUCTION PILES ~71:China Construction Second Engineering Bureau Shenzhen Construction Investment Development Co., Ltd., Room 2407-08, Chuangtou Mansion, No. 9 Tengfei Road, Longgang District, SHENZHEN, People's Republic of China;THE FIRST CONSTRUCTION ENGINEERING COMPANY LTD. OF CHINA CONSTRUCTION SECOND ENGINEERING BUREAU, Floors 1-7, Building 1, Yard 9, Kechuang 4th Street, Beijing Economic and

Technological Development Zone, Daxing District, Beijing, People's Republic of China ~72: GUANGYONG WU;GUIPENG LIN;YAQUAN DENG;YU CHEN~ 33:CN ~31:202221262097.X ~32:19/05/2022

2023/05011 ~ Complete ~54:TABLET FOR USE IN TREATING HUNTINGTON'S DISEASE AND METHOD OF MAKING THE SAME ~71:PTC THERAPEUTICS, INC., 100 Corporate Court, South Plainfield, New Jersey, 07080, United States of America ~72: AKM NASIR UDDIN;MANDAR VASANT DALI;SWATHI PINNAMANENI~ 33:US ~31:63/113,826 ~32:13/11/2020;33:US ~31:63/245,927 ~32:19/09/2021;33:US ~31:63/261,467 ~32:21/09/2021;33:US ~31:63/261,495 ~32:22/09/2021;33:US ~31:63/255,745 ~32:14/10/2021

2023/05014 ~ Complete ~54:COMPOSITIONS COMPRISING ALLYL SULFIDE AND A SURFACTANT AND METHODS OF USING SAME ~71:THE STATE OF ISRAEL, MINISTRY OF AGRICULTURE & RURAL DEVELOPMENT, AGRICULTURAL RESEARCH ORGANIZATION (ARO) (VOLCANI INSTITUTE), Volcani Center, P.O. Box 15159, Israel ~72: OR, Etti~ 33:US ~31:63/115,274 ~32:18/11/2020;33:US ~31:63/222,063 ~32:15/07/2021

2023/05024 ~ Complete ~54:PREPARATION METHOD FOR CANNFLAVIN COMPOUNDS ~71:DEYI PHARMACEUTICAL LTD., Room 916, Floor 9, Unit 2, Building 1-2, Hongshengda Yuexing Commercial Center, People's Republic of China ~72: DU, Yesong;LAN, Lan;LUO, Junlu;MOU, Hongtao;TAN, Xin;WANG, Shubin;ZHANG, Pingping~ 33:CN ~31:202011262162.4 ~32:12/11/2020

2023/05006 ~ Complete ~54:CULTURE SUBSTRATE FOR BURIED SHELLFISH, AND APPLICATION THEREOF IN BURIED SHELLFISH CULTURE ~71:JIANGSU OCEAN UNIVERSITY, No.59 Cangwu Road, Haizhou District, Lianyungang, Jiangsu 222005, People's Republic of China ~72: CHEN LIANG;GUOLIANG REN;HAIBAO DUAN;QING XIA;SENLEI FENG;SHIYU YAN;ZHENQUAN CUI;ZHIGUO DONG~ 33:CN ~31:202211434135.X ~32:16/11/2022

2023/05015 ~ Complete ~54:FOAMING INGREDIENT ~71:Société des Produits Nestlé S.A., Avenue Nestlé 55, VEVEY 1800, SWITZERLAND, Switzerland ~72: AMAGLIANI, Luca;BRÜTSCH, Linda;DUPAS-LANGLET, Marina;MEUNIER, Vincent Daniel Maurice;SCHMITT, Christophe Joseph Etienne~ 33:EP ~31:20201263.9 ~32:12/10/2020

2023/04994 ~ Complete ~54:COMBINED LIGHT ECOLOGICAL PLANTING BOX FOR ROOF GREENING ~71:CHINA CONSTRUCTION SECOND ENGINEERING BUREAU LTD., 251 Beiyangwa, Liyuan Town, Tongzhou District, Beijing, People's Republic of China;THE FIRST CONSTRUCTION ENGINEERING COMPANY LTD. OF CHINA CONSTRUCTION SECOND ENGINEERING BUREAU, Floors 1-7, Building 1, Yard 9, Kechuang 4th Street, Beijing Economic and Technological Development Zone, Daxing District, Beijing, People's Republic of China ~72: DIDONG CHEN;LIANGWEI YU;SHOUWEN LI;XIAOLIANG ZHANG;ZHIPENG GONG;ZHUXIANG ZHAO~ 33:CN ~31:202210549540.X ~32:20/05/2022

2023/05003 ~ Complete ~54:AEROSOL-GENERATING ARTICLE WITH LOW DENSITY SUBSTRATE ~71:PHILIP MORRIS PRODUCTS S.A., Quai Jeanrenaud 3, Switzerland ~72: UTHURRY, Jérôme~ 33:EP ~31:20201025.2 ~32:09/10/2020;33:EP ~31:20201041.9 ~32:09/10/2020;33:EP ~31:20201046.8 ~32:09/10/2020;33:EP ~31:20201052.6 ~32:09/10/2020;33:EP ~31:20201125.0 ~32:09/10/2020;33:EP ~31:20201137.5 ~32:09/10/2020

2023/05007 ~ Complete ~54:N-ACETYLGALACTOSAMINE(GALNAC)-DERIVED COMPOUNDS AND OLIGONUCLEOTIDES ~71:ADARX PHARMACEUTICALS, INC., 5871 Oberlin Drive Suite 200 San Diego, California 92121, United States of America ~72: BO CHENG;CHANDRAMOULI CHIRUTA;CHASE ROBERT OLSSON;INDRASENA REDDY KUMMETHA;MEHDI MICHEL DJAMEL NUMA;RUI ZHU;ZHEN LI~ 33:US ~31:63/089,936 ~32:09/10/2020;33:US ~31:63/113,801 ~32:13/11/2020;33:US ~31:63/131,317

~32:29/12/2020;33:US ~31:63/141,300 ~32:25/01/2021;33:US ~31:63/146,276 ~32:05/02/2021;33:US ~31:63/251,580 ~32:01/10/2021

2023/05009 ~ Complete ~54:PROCESS FOR PREPARATION OF PURE NALTREXONE DECANOATE, ITS SALTS, COMPOSITION AND METHOD OF USE THEREOF ~71:NAVIN SAXENA RESEARCH & TECHNOLOGY PVT. LTD., 58-D, Government Industrial Estate, Charkop, Kandivali (West), Mumbai, Maharashtra, 400 067, India ~72: AAKARSH SAXENA;KUNAL SAXENA~ 33:IN ~31:202021046814 ~32:27/10/2020

2023/05020 ~ Complete ~54:WOUND CORE ~71:NIPPON STEEL CORPORATION, 6-1, Marunouchi 2-chome, Chiyoda-ku, TOKYO 100-8071, JAPAN, Japan ~72: KAWAMURA , Yusuke;MIZUMURA, Takahito~ 33:JP ~31:2020-178891 ~32:26/10/2020

2023/04982 ~ Complete ~54:APPLICATION OF CARNOSOL IN PREPARATION OF MYOCARDIAL PROTECTIVE DRUGS ~71:Institute of Chinese Materia Medica, China Academy of Chinese Medical Sciences, No. 16, Nanxiao Street, Inner Dongzhimen, Dongcheng District, Beijing, People's Republic of China ~72: WANG Lifang;XU He;YANG Hongjun;ZHANG Fangbo~ 33:CN ~31:2023103525320 ~32:04/04/2023

2023/04990 ~ Complete ~54:A SPECIAL FOLIAR FERTILIZER FOR KIWIFRUIT, AND PREPARATION AND APPLICATION METHODS THEREOF ~71:LIUPANSHUI NORMAL UNIVERSITY, No. 288 Minghu Road, Zhongshan District, Liupanshui City, Guizhou Province, 553004, People's Republic of China ~72: Fang, Yumei;HE, Bin;HUANG, Yacheng;LIU, Linya~

2023/04992 ~ Complete ~54:SUBCUTANEOUS FORMULATIONS OF ANTI-CD38 ANTIBODIES AND THEIR USES ~71:Janssen Biotech, Inc., 800/850 Ridgeview Drive, HORSHAM 19044, PA, USA, United States of America ~72: JANSSON, Richard;KUMAR, Vineet~ 33:US ~31:62/250,016 ~32:03/11/2015

2023/04980 ~ Complete ~54:ULTRA-HIGH PERFORMANCE CONCRETE PRECAST COLUMN AND USING METHOD THEREOF ~71:JIANGSU OCEAN UNIVERSITY, No.59 Cangwu Road, Haizhou District, Lianyungang, Jiangsu, 222005, People's Republic of China ~72: GAO, Ziqing;LU, Haoyu;LUO, Hui;SONG, Weide;WANG, Xuan;WANG, Zhuoqun;XIE, Qinghai;ZHU, Jianguo;ZONG, Zhongling~ 33:CN ~31:2023102947804 ~32:23/03/2023

2023/05000 ~ Complete ~54:POSITIVE-PRESSURE NON-AGITATING LIQUID FILTRATION ~71:SCRAGG, John Edgar, 15 Clematis Grove, South Africa ~72: SCRAGG, John Edgar~ 33:ZA ~31:2020/06140 ~32:05/10/2020

2023/05004 ~ Complete ~54:MULTIFUNCTIONAL NATURAL KILLER (NK) CELL ENGAGERS BINDING TO NKP46 AND CD123 ~71:INNATE PHARMA, 117 avenue de Luminy, France;SANOFI, 46 Avenue de la Grande, France ~72: AMARA, Céline;BENINGA, Jochen;CHIRON Marielle;DUFFIEUX, Francis;GAUTHIER Laurent;NICOLAZZI, Céline;ROSSI, Benjamin;THIELENS, Ariane;VIRONE-ODDOS, Angela~ 33:EP ~31:20306717.8 ~32:31/12/2020;33:US ~31:63/256,950 ~32:18/10/2021

2023/05008 ~ Complete ~54:FRACTURE DENSITY MODEL SYSTEM, METHODS, AND APPARATUSES ~71:DYNO NOBEL INC., 6440 S. Millrock Drive, Suite 150, Salt Lake City, Utah, 84121, United States of America ~72: A B M ABDUL ALI BHUIYAN;CHARLES MICHAEL LOWNDS;DALE S PREECE~ 33:US ~31:63/109,033 ~32:03/11/2020

2023/05017 ~ Complete ~54:SYSTEM FOR EMBRYO TRANSFER ~71:Premium Fertility S.L., Ronda Narciso Monturiol y Estarriol, Num 7-9, Planta 2, PATERNA (VALENCIA) E-46980, SPAIN, Spain ~72: JIMÉNEZ

MORENO, David;SANTAMARÍA COSTA, Javier;SIMÓN VALLÉS, Carlos~ 33:EP ~31:20382905.6 ~32:15/10/2020

2023/04999 ~ Complete ~54:A FLEXIBLE SYSTEM FOR PROCESSING, TREATMENT AND USE OF WASTE ~71:TERDESOL SE, Radlicka 663/28, 1500 Praha 5, Smichov, Czech Republic ~72: STEHLIK, Tomas~ 33:CZ ~31:PV 2020-566 ~32:16/10/2020

2023/05002 ~ Complete ~54:AEROSOL-GENERATING ARTICLE WITH TUBULAR ELEMENT HAVING AN OPENING ~71:PHILIP MORRIS PRODUCTS S.A., Quai Jeanrenaud 3, Switzerland ~72: MOHSENI, Farhang~ 33:EP ~31:20201169.8 ~32:09/10/2020;33:EP ~31:20201175.5 ~32:09/10/2020

2023/05010 ~ Complete ~54:NOVEL BIOACTIVE PEPTIDE COMBINATIONS AND USES THEREOF ~71:COLZYX AB, Medicon Village, Scheelevågen 2, 22381, Lund, Sweden ~72: MATTHIAS MÖRGELIN;SUADO M ABDILLAHI~ 33:GB ~31:2016456.2 ~32:16/10/2020

2023/05016 ~ Complete ~54:SPIRO DERIVATIVES OF ALPHA-D-GALACTOPYRANOSIDES ~71:Idorsia Pharmaceuticals Ltd, Hegenheimermattweg 91, ALLSCHWIL 4123, SWITZERLAND, Switzerland ~72: BOLLI, Martin;GATFIELD, John;GRISOSTOMI, Corinna;REMEN, Lubos;SAGER, Christoph;ZUMBRUNN, Cornelia~ 33:IB ~31:2020/077968 ~32:06/10/2020

2023/04998 ~ Complete ~54:NOVEL STEROID HORMONE LIGAND ASSAYS ~71:INSITUGEN LIMITED, 87 St David Street, North Dunedin, New Zealand ~72: HEATHER, Alison Kay~ 33:US ~31:63/112,924 ~32:12/11/2020

2023/05018 ~ Complete ~54:HETEROARYL AMIDE INHIBITORS OF CD38 ~71:Buck Institute for Research on Aging, 8001 Redwood Blvd., NOVATO 94945, CA, USA, United States of America;Napa Therapeutics Ltd., Craigmuir Chambers, P.O. Box 71, ROAD TOWN 08540, TORTOLA, VIRGIN ISLANDS (BRITISH), Virgin Islands (British) ~72: COE, Jotham W.;FELSTEAD, Steve;JACKSON, Margaret;NELSON, Frederick R.;PERRONE, Rosalba;SILVA, Elena;VERDIN, Eric;VOLKMANN, Robert A.~ 33:US ~31:63/089,818 ~32:09/10/2020

2023/05022 ~ Complete ~54:SOLVENT SYSTEM FOR CLEANING LOW-TEMPERATURE FIXED-BED REACTOR CATALYST IN SITU ~71:United Laboratories International, LLC, 12600 North Featherwood, Suite 330, HOUSTON 77034, TX, USA, United States of America ~72: MATZA, Stephen D.;RICE, Elisa~ 33:US ~31:17/064,396 ~32:06/10/2020

2023/04977 ~ Provisional ~54:PERPENDICULAR COIL INTEREFERENCE ~71:AZOTEQ HOLDINGS LIMITED, c/o Spyrou Kyprianou Avenue 20, Chapo Central, Cyprus ~72: BRUWER, Frederick Johannes;RADEMEYER, Daniel Barend~

2023/04991 ~ Complete ~54:A GLASS PANEL INSPECTION AND CLEANING ROBOT ~71:LIUPANSHUI NORMAL UNIVERSITY, Chaoyang New Village, Minghu Road, Liupanshui City, Guizhou Province, People's Republic of China ~72: ZHANG, Wanhe~

2023/04996 ~ Complete ~54:AN AIR DUST INTEGRATED SLEEVE AND CONNECTION STRUCTURE FOR A FIREPROOF SECONDARY STRUCTURE WALL ~71:CHINA CONSTRUCTION SECOND ENGINEERING BUREAU LTD., 251 Beiyangwa, Liyuan Town, Tongzhou District, Beijing, People's Republic of China;THE FIRST CONSTRUCTION ENGINEERING COMPANY LTD. OF CHINA CONSTRUCTION SECOND ENGINEERING BUREAU, Floors 1-7, Building 1, Yard 9, Kechuang 4th Street, Beijing Economic and Technological Development Zone, Daxing District, Beijing, People's Republic of China ~72: CHANG, ZHEN;DING, SHUO;GAO, YUANDAN;GUO, JINBIN;LV, ZHENXING;MIAO, BIN;WANG, ZHANDONG;WU, TONG;XUE, MIN;ZHANG, YUHANG~ 33:CN ~31:202221203298.2 ~32:19/05/2022

2023/04976 ~ Provisional ~54:INDUCTIVE KEYBOARD SWITCH ~71:AZOTEQ HOLDINGS LIMITED, c/o Spyrou Kyprianou Avenue 20, Chapo Central, Cyprus ~72: BRUWER, Frederick Johannes;RADEMEYER, Daniel Barend~

2023/04984 ~ Complete ~54:APPLICATION OF GYPENOSIDES COMBINED WITH CAPSAICINOIDS IN PREPARING MEDICINES FOR PREVENTING AND/OR TREATING NAFLD ~71:Institute of Chinese Materia Medica, China Academy of Chinese Medical Sciences, No. 16, Nanxiao Street, Inner Dongzhimen, Dongcheng District, Beijing, People's Republic of China ~72: BIAN Baolin;SI Nan;WANG Hongjie;YANG Hongjun;ZHANG Fangbo;ZHAO Haiyu~ 33:CN ~31:2023103371125 ~32:31/03/2023

2023/05005 ~ Complete ~54:ANTI-HER3 ANTIBODY AND ANTI-HER3 ANTIBODY-DRUG CONJUGATE AND MEDICAL USE THEREOF ~71:JIANGSU HENGRUI PHARMACEUTICALS CO., LTD., No.7 Kunlunshan Road, Economic and Technological Development Zone, Lianyungang, Jiangsu, 222047, People's Republic of China;SHANGHAI HENGRUI PHARMACEUTICAL CO., LTD., 279 Wenjing Road Minhang District, Shanghai, 200245, People's Republic of China ~72: JIA YU;WEIKANG TAO;YANG YANG~ 33:CN ~31:202011097383.0 ~32:14/10/2020;33:CN ~31:202111171200.X ~32:08/10/2021

2023/05019 ~ Complete ~54:MULTITARGETING BISPECIFIC ANTIGEN-BINDING MOLECULES OF INCREASED SELECTIVITY ~71:Amgen Inc., One Amgen Center Drive, THOUSAND OAKS 91320-1799, CA, USA, United States of America;Amgen Research (Munich) GmbH, Staffelseestrasse 2, MUNICH 81477, GERMANY, Germany ~72: BAILIS, Julie;BLUEMEL, Claudia;BOEHM, Thomas;BROZY, Johannes;D'ANGELO, Igor;EVERTS, Stephanie;KLINGER, Matthias;KUFER, Peter;LUTTERBUESE, Petra;MUENZ, Markus;NAEGELE, Virginie;PHAM, Elizabeth;RATTEL, Benno;RAU, Doris;RAUM, Tobias;THOMAS, Oliver;ULLRICH, Ines;WAHL, Joachim;WEBHOFER, Christian;WEIDLER, Sascha;ZALEWSKI, Adam~ 33:US ~31:63/110,957 ~32:06/11/2020;33:US ~31:63/231,877 ~32:11/08/2021

2023/05021 ~ Complete ~54:COMPOSITION COMPRISING DMPP AND PHOSPHONATE ~71:WockLab GmbH & Co. KG, Glärbach 2, BALVE 58802, GERMANY, Germany ~72: SCHMALZ, Dirk~ 33:EP ~31:20209124.5 ~32:23/11/2020

2023/04988 ~ Complete ~54:A DEICING BLADE STRUCTURE AND DEICING DEVICE ~71:LIUPANSHUI NORMAL UNIVERSITY, Chaoyang New Village, Minghu Road, Liupanshui City, Guizhou Province, People's Republic of China ~72: ZHANG, Wanhe~

. - APPLIED ON 2023/05/08 -

2023/05026 ~ Provisional ~54:FINDME SOCIAL MEDIA ~71:shivaan bhadur, 1a swales crescent, South Africa ~72: shivaan bhadur~ 33:ZA ~31:a06 ~32:06/05/2023

2023/05028 ~ Provisional ~54:VACUUM ARC NEUTRALIZER FOR ION BEAM SOURCES AND SPACECRAFT PROPULSION SYSTEMS ~71:Paul Stansell ID: 9801165226087 and Trevor Lafleur ID: 8406135004084, 35 Dudley Road, South Africa ~72: Paul Stansell ID: 9801165226087;Trevor Lafleur ID: 8406135004084~

2023/05030 ~ Complete ~54:SHIP DETECTION METHOD BASED ON MACHINE VISION ~71:Shanghai Maritime University, No.1550 Haigang Avenue, Pudong New Area, Shanghai, People's Republic of China;Shanghai Ship and Shipping Research Institute Co., Ltd, No.600 Minsheng Road, Pudong New Area, Shanghai, People's Republic of China ~72: CHEN Xinqiang;HAN Bing;LV Siying;MEI Xiaojun;WU Huafeng;WU Zhongdai;XIAN Jiangfeng;YANG Yongsheng;ZHANG Qiannan;ZHOU Yamin~

2023/05033 ~ Complete ~54:FORMULATION OF ADHESIVE AND WOUND HEALING DUAL ACTIVE HYDROGEL WITH MOLECULES ISOLATED FROM BIOLOGICAL SOURCES ~71:Anand Joshi, Parul

University, Vadodara, Gujarat 391760, India, Gujarat, India;Ankit Dilipkumar Oza, Department of Computer Sciences and Engineering, Institute of Advanced Research, Gandhinagar, Gujarat 382426, India, Gujarat, India;Balraj krishnan Tudu, Department of Chemical Engineering, School of Engineering, P P Savani University, NH-8, GETCO, Near Biltech, Kosamba, Surat , Gujarat, 394125, India, Gujarat, India;Deepak kohli, Department of Chemical Engineering, School of Engineering, P P Savani University, NH-8, GETCO, Near Biltech, Kosamba, Surat, Gujarat, 394125, India, Gujarat, India;Himanshu Choksi, Department of Chemical Engineering, Pandit Deendayal Energy University, Raisan village, District Gandhinagar, 382421, Gujarat, India, Gujarat, India;Jigesh Mehta, Department of Chemical Engineering, School of Engineering, P P Savani University, NH-8, GETCO, Near Biltech, Kosamba, Surat , Gujarat, 394125, India, Gujarat, India;Jigna Patel, Department of Chemical Engineering, School of Engineering, P P Savani University, NH-8, GETCO, Near Biltech, Kosamba, Surat , Gujarat, 394125, India, Gujarat, India;Koshal Kishor, Department of Biotechnology & Bioengineering, Institute of Advanced Research, Gandhinagar, Gujarat 382426, India, Gujarat, India;Kushal Yadav, Department of Chemical Engineering, National Institute of Technology - Rourkela, Odisha, 769008, India, Gujarat, India;Sivakumar P., Department of Petroleum Engineering, Pandit Deendayal Energy University, Raisan village, District Gandhinagar, 382421, Gujarat, India, Gujarat, India;Unnati Joshi, Parul University, Vadodara, Gujarat 391760, India, Gujarat, India;Vijay K.Patel, Parul University, Vadodara, Gujarat 391760, India, Gujarat, India ~72: Anand Joshi;Ankit Dilipkumar Oza;Balraj krishnan Tudu;Deepak kohli;Himanshu Choksi;Jigesh Mehta;Jigna Patel;Koshal Kishor;Kushal Yadav;Sivakumar P.;Unnati Joshi;Vijay K.Patel~ 33:IN ~31:202321031101 ~32:01/05/2023

2023/05056 ~ Complete ~54:METHOD FOR PREPARING FOAMED CERAMIC GLASS FROM TITANIUM EXTRACTION TAILINGS AND WASTE GLASS ~71:Shanghai University, No. 99, Shangda Road, Baoshan District, Shanghai, 200444, People's Republic of China ~72: CHEN, Chen;ZHEN, Qiang;ZHENG, Feng~

2023/05031 ~ Complete ~54:A TRIALDEHYDE ADHESIVE FILLER WITH ANTIBACTERIAL FUNCTION FOR ARTIFICIAL BOARD AND ITS APPLICATION ~71:Shandong Zhongyuan New Materials Co.LTD, No.3, Fei County Adhesive Chemical Industrial Park, Tan Yi Town, Fei County, Linyi City, Shandong Province, 273499, People's Republic of China ~72: Zhigang TAN~ 33:CN ~31:2023104066685 ~32:17/04/2023

2023/05037 ~ Complete ~54:A NEW METHOD FOR SYNTHESIS OF CHIRAL 5,6- DIHYDROPHENIDINE COMPOUNDS ~71:Guizhou Minzu University, Dongjia Weir in Huaxi District, Guiyang City, Guizhou Province, 550025, People's Republic of China ~72: Daohai ZHANG;Fang TAN;Zhusheng YANG~

2023/05060 ~ Complete ~54:OBJECTIVE EEVALUATION METHOD, DEVICE AND MEDIUM FOR ONLINE SUBJECTIVE TEST QUESTIONS ~71:Yunnan Minzu University, No.2929, Yuehua Street, Chenggong District, Kunming, Yunnan Province, People's Republic of China ~72: Chen Junhua;Xiong Lianglin;Zhang Haiyang~ 33:CN ~31:202310036912.3 ~32:10/01/2023

2023/05102 ~ Provisional ~54:E-HAILING MOTOR SPARES BUSINESS ~71:Herold Khutso Makgoka, 45 Milton Road, Lombardy East, South Africa ~72: Bolt;Mr D Food;UBER~

2023/05065 ~ Complete ~54:IMMUNOMODULATORY AGENT ~71:THE QUEEN'S UNIVERSITY OF BELFAST, University Road, United Kingdom ~72: GREEN, Brian Desmond~ 33:GB ~31:2017255.7 ~32:30/10/2020

2023/05068 ~ Complete ~54:AN ADAPTOR ASSEMBLY FOR A FLUID DISPENSING SYSTEM ~71:ESSITY HYGIENE AND HEALTH AKTIEBOLAG, 405 03, Sweden ~72: HODOSSY, Sofia;SVEDBERG, Agne~

2023/05076 ~ Complete ~54:IMPROVEMENTS IN OR RELATING TO ORGANIC COMPOUNDS ~71:Givaudan SA, Chemin de la Parfumerie 5, VERNIER 1214, SWITZERLAND, Switzerland ~72: BAY, Olivia;CHARBONNIER,

Antoine;COMPTON, Jeremy;DAVID, Eléonore;DE BOUDEMANGE, Guy Emmanuel~ 33:GB ~31:2018435.4 ~32:24/11/2020

2023/05029 ~ Provisional ~54:VACUUM ARC SOLID FUELLED HALL THRUSTER ~71:Paul Stansell ID: 9801165226087, 35 Dudley Road, South Africa ~72: Paul Stansell ID: 9801165226087~

2023/05032 ~ Complete ~54:POSITIVE ELECTRODE MATERIAL CONTAINING NANOTUBE TUNGSTEN NITRIDE AND PREPARATION METHOD THEREOF ~71:INSTITUTE OF APPLIED CHEMISTRY , JIANGXI ACADEMY OF SCIENCES, No. 7777, Changdong Avenue, Qingshanhu District, Nanchang, Jiangxi, 330096, People's Republic of China ~72: YAN, Nanfu~

2023/05042 ~ Complete ~54:A CONDITION MONITORING MECHANISM FOR MUNICIPAL BRIDGES ~71:CHINA CONSTRUCTION SECOND ENGINEERING BUREAU LTD., 251 Beiyangwa, Liyuan Town, Tongzhou District, Beijing, People's Republic of China;THE FIRST CONSTRUCTION ENGINEERING COMPANY LTD. OF CHINA CONSTRUCTION SECOND ENGINEERING BUREAU, Floors 1-7, Building 1, Yard 9, Kechuang 4th Street, Beijing Economic and Technological Development Zone, Daxing District, Beijing, People's Republic of China ~72: DIDONG CHEN;LIANGWEI YU;SHOUWEN LI;XIAOLIANG ZHANG;YAXIN DING;ZHIPENG GONG;ZHISEN CHEN~ 33:CN ~31:202222122810.7 ~32:12/08/2022

2023/05045 ~ Complete ~54:PREPARATION METHOD OF ADSORBENT FOR REMOVING TYPICAL PERFLUORINATED COMPOUNDS IN WATER ENVIRONMENT ~71:China Agricultural University, China Agricultural University, 17 Qinghua East Road, Haidian District, Beijing, 100083, People's Republic of China ~72: CAO, Fengmei;HUANG, Guangqun;LIU, Shan;WU, Min;ZHANG, Jingzhi;ZHOU, Yuguang~

2023/05063 ~ Complete ~54:AEROSOL-GENERATING ARTICLE HAVING A VENTILATED CAVITY AND AN UPSTREAM ELEMENT ~71:PHILIP MORRIS PRODUCTS S.A., Quai Jeanrenaud 3, Switzerland ~72: UTHURRY, Jerome~ 33:EP ~31:20201025.2 ~32:09/10/2020;33:EP ~31:20201041.9 ~32:09/10/2020;33:EP ~31:20201046.8 ~32:09/10/2020;33:EP ~31:20201052.6 ~32:09/10/2020;33:EP ~31:20201125.0 ~32:09/10/2020;33:EP ~31:20201137.5 ~32:09/10/2020

2023/05073 ~ Complete ~54:COMBINATION OF ANTIBODY-DRUG CONJUGATE AND PARP1 SELECTIVE INHIBITOR ~71:AstraZeneca UK Limited, 1 Francis Crick Avenue, Cambridge Biomedical Campus, CAMBRIDGE CB2 0AA, CAMBRIDGESHIRE, UNITED KINGDOM, United Kingdom;Daiichi Sankyo Company, Limited, 3-5-1, Nihonbashi Honcho, Chuo-ku, TOKYO 103-8426, JAPAN, Japan ~72: ASTANEH, Azadeh Cheraghchi Bashi;LEO, Elisabetta;METTETAL II, Jerome Thomas;WALLEZ, Yann~ 33:US ~31:63/089,859 ~32:09/10/2020

2023/05080 ~ Complete ~54:NONWOVEN FABRIC COMPRISING FILAMENTARY STRATA ~71:PFN - GIC A.S., Primeticka 3623/86, Czech Republic;PFNONWOVENS CZECH S.R.O., Primeticka 3623/86, Czech Republic;PFNONWOVENS HOLDING S.R.O., Hradcanske namesti 67/8, Czech Republic;REIFENHÄUSER GMBH & CO. KG MASCHINENFABRIK, Spicher Strasse 46, Germany ~72: Christine NOACK;Michael KAUSCHKE;Nikol POLASKOVA;Patrick BOHL;Tobias WAGNER;Zdenek MECL~ 33:CZ ~31:PV 2020-591 ~32:02/11/2020

2023/05085 ~ Complete ~54:PROGRAMMABLE NON-EXPLOSIVE ELECTRONIC INITIATOR FOR ROCK BLASTING, AND EXOTHERMIC REACTION AND TESTING PROCESS OF THE INITIATOR ~71:COMERCIALIZADORA EXOBLAST CHILE S.P.A, Augusto Villanueva 20 dpto. 2002, Ñuñoa. Santiago, Chile ~72: EDUARDO ALFREDO ABARCA VARGAS~

2023/05090 ~ Complete ~54:COMPOSITIONS AND METHODS FOR STABILIZATION OF LIPID NANOPARTICLE MRNA VACCINES ~71:BIONTECH SE, An der Goldgrube 12, 55131, Mainz, Germany ~72: BAKUL SUBODH BHATNAGAR;CHRISTIAN REINSCH;KAUSHIK THANKI;RAMIN DARVARI;SERGUEI A

TCHESSALOV;STEFFEN PANZNER;SUKRUT SOMANI;SUMIT LUTHRA~ 33:US ~31:63/114,478 ~32:16/11/2020;33:US ~31:63/115,588 ~32:18/11/2020

2023/05092 ~ Complete ~54:A TEXTILE RUBBER RING ASSEMBLY FOR EASY INSTALLATION ~71:ANHUI LANXIANG TEXTILE MACHINERY TECHNOLOGY CO., LTD., Xincheng 2nd Road, Economic And Technological Development Zone Lu'an, People's Republic of China ~72: Chao ZHANG;Licai ZHUO~ 33:CN ~31:202210206112.7 ~32:03/03/2022

2023/05095 ~ Complete ~54:METHODS FOR SEQUESTERING ATMOSPHERIC CARBON AND FOR QUANTIFYING THE SAME ~71:LOCUS SOLUTIONS IPCO, LLC, 30600 Aurora Road, Suite 180, United States of America ~72: CALLOW, Nicholas;FARMER, Sean;FOTSCH, Alex;KARATHUR, Karthik N.~ 33:US ~31:63/110,070 ~32:05/11/2020

2023/05098 ~ Complete ~54:TOILET UNIT ~71:BETRAM (PROPRIETARY) LIMITED, 11 Steenbok Street, Koedoespoort, PRETORIA 0186, SOUTH AFRICA, South Africa ~72: FOURIE, Lukas, Pieter;FOURIE, Lukas, Pieter~ 33:ZA ~31:2020/07179 ~32:18/11/2020

2023/05039 ~ Complete ~54:A LARGE-SPAN STEEL TRUSS WITH STEEL CONCRETE FRAME FOR MOUNTAINOUS CITIES ~71:CHINA CONSTRUCTION SECOND ENGINEERING BUREAU LTD., 251 Beiyangwa, Liyuan Town, Tongzhou District, Beijing, People's Republic of China ~72: DONG YAN;HONGYAN ZENG;JUNREN CHENG;LILI MA;MING LEI;PAN LI;WEI XUE;WENYI ZOU;XING HUANG~ 33:CN ~31:202221771538.9 ~32:11/07/2022

2023/05047 ~ Complete ~54:A WALL SURFACE CLEANING DEVICE FOR CLEANING HOSPITAL WALL TILES ~71:China Construction Second Engineering Bureau Shenzhen Construction Investment Development Co., Ltd., Room 2407-08, Chuangtou Mansion, No. 9 Tengfei Road, Longgang District, Shenzhen, People's Republic of China;Shenzhen Longgang District Construction Works Department, Floors 1, 4, 5, and 6, North Block of Education Building, Qinglin Middle Road, Longcheng Street, Longgang District, Shenzhen, People's Republic of China;THE FIRST CONSTRUCTION ENGINEERING COMPANY LTD. OF CHINA CONSTRUCTION SECOND ENGINEERING BUREAU, Floors 1-7, Building 1, Yard 9, Kechuang 4th Street, Beijing Economic and Technological Development Zone, Daxing District, Beijing, People's Republic of China ~72: GUANGCHAO SUN;LING ZHANG;QINGSEN CAI;XIAOSHENG LUO;ZHOU ZHOU~ 33:CN ~31:202221742783.7 ~32:06/07/2022

2023/05051 ~ Complete ~54:BRAKE SYSTEM FOR USE IN SHAFT AND INCLINED CONVEYOR SYSTEMS ~71:SIEMAG TECBERG GmbH, TECBERG park 28, Germany ~72: Sergei STÄRKLOW;Sergej AUGUST~ 33:LU ~31:LU102951 ~32:10/05/2022

2023/05054 ~ Complete ~54:AMORPHOUS SOLID SUCCINYLATED 3-(FATTY ACID AMIDO)-2-HYDROXY-1-(PROTECTED HYDROXY)-PROPANE SALTS AND METHODS OF MAKING THE SAME ~71:GERON CORPORATION, 919 E. Hillsdale Blvd. Suite 250, Foster City, California, 94404, United States of America ~72: JENNIFER E ALBANEZE-WALKER~ 33:US ~31:62/926,778 ~32:28/10/2019

2023/05055 ~ Complete ~54:SIDE SUPPORTED MINING PACK ~71:Timrite (Pty) Ltd, 10 Van der Bijl Street, South Africa ~72: Lebogang Mogorosi~ 33:ZA ~31:2022/03478 ~32:25/03/2022

2023/05067 ~ Complete ~54:COATED STEEL SHEET AND HIGH STRENGTH PRESS HARDENED STEEL PART AND METHOD OF MANUFACTURING THE SAME ~71:ARCELORMITTAL, 24-26, Boulevard d'Avranches, Luxembourg ~72: Clément PHILIPPOT;David DUSSAUSSOIS;Matthieu SALIB;Sandra LE GUILLARD~ 33:IB ~31:PCT/IB2020/062045 ~32:16/12/2020

2023/05072 ~ Complete ~54:CD1A ANTIBODIES AND USES THEREOF ~71:Children's Medical Center Corporation, 55 Shattuck St., BOSTON 02115, MA, USA, United States of America;Pfizer Inc., 66 Hudson Boulevard East, NEW YORK 10001-2192, NY, USA, United States of America ~72: CHANG, Chew Shun;CHIANG, Shian-Huey;KOVALENKO, Oleg V.;MARZE, Nicholas Andrew;WINAU, Florian;WU, Di~ 33:US ~31:63/090,055 ~32:09/10/2020

2023/05084 ~ Complete ~54:AN INSULATING GLASS UNIT, A METHOD OF MAKING SUCH AN INSULATING GLASS UNIT AND A METHOD OF OPERATING A DYNAMIC SHADE IN SUCH AN INSULATING GLASS UNIT, A SUBSTRATE ~71:GUARDIAN GLASS, LLC, 2300 Harmon Road , Auburn Hills, Michigan, 48326, United States of America ~72: DAVID LAWRENCE;JEFFREY KOSKULICS;JOSHUA FINCH~ 33:US ~31:17/138,528 ~32:30/12/2020

2023/05036 ~ Complete ~54:REJUVENATION AND RENEWAL METHOD FOR AGING COFFEE TREE AND APPLICATION THEREOF ~71:Baoshan Longyang Zuoyuan Coffee Co., Ltd., Zuoyuan Coffee Company, Kaxiang Academy, Lujiang Town, Baoshan City, Yunnan Province, 678000, People's Republic of China;Flavor Beverage Institute, Chinese Academy of Tropical Agricultural Sciences, Tropical Botanical Garden, Xinglong Town, Wanning City, Hainan Province, 571533, People's Republic of China;Institute of Tropical and Subtropical Economic Crops, Yunnan Academy of Agricultural Sciences, No. 518, Lancheng Road, Longyang District, Baoshan City, Yunnan Province, 678000, People's Republic of China ~72: CHENG, Jinhuan;DONG, Wenjiang;FAN, Qizuo;FAN, Wenhao;FU, Xingfei;HE, Hongyan;HUANG, Jiaxiong;LI, Guiping;LI, Yanan;LI, Yaqi;LOU, Yuqiang;WU, Ruirui;YANG, Chongzhen;YU, Haohao~ 33:CN ~31:2023102915254 ~32:22/03/2023

2023/05057 ~ Complete ~54:A BACTERIOSTATIC DILUENT BENEFICIAL TO DONKEY UTERINE HORN INSEMINATION AND A PREPARATION METHOD THEREOF ~71:INNER MONGOLIA ACADEMY OF AGRICULTURAL & ANIMAL HUSBANDRY SCIENCES, 22 Zhaojun Road, Yuquan District, Hohhot, Inner Mongolia, 010031, People's Republic of China ~72: BAI, Jinyu;JIA, Xiaoqing;MA, Yuejun;QIAO, Jianmin;SU, Shaofeng;SUN, Peipei;Teri Gele;WU, Haiqing~

2023/05087 ~ Complete ~54:PYRIMIDINE COMPOUNDS, COMPOSITIONS, AND MEDICINAL APPLICATIONS THEREOF ~71:BLUEPRINT MEDICINES CORPORATION, 45 Sidney Street, Cambridge, Massachusetts, 02139, United States of America ~72: ANJALI PANDEY;BRUCE ROTH;GURULINGAPPA HALLUR;MICHAEL RAJESH STEPHEN;NAVEEN SADHU M;NAVEENA MADHYASTHA;SRIDHARAN RAJAGOPAL;TRACY SAXTON~ 33:US ~31:63/108,185 ~32:30/10/2020;33:US ~31:63/236,194 ~32:23/08/2021;33:US ~31:63/271,991 ~32:26/10/2021

2023/05091 ~ Complete ~54:LNP COMPOSITIONS COMPRISING RNA AND METHODS FOR PREPARING, STORING AND USING THE SAME ~71:BIONTECH SE, An der Goldgrube 12, 55131, Mainz, Germany ~72: BAKUL SUBODH BHATNAGAR;JORRIT-JAN KRIJGER;KAUSHIK THANKI;RAMIN DARVARI;SERGUEI TCHESSALOV;STEFFEN PANZNER;SUMIT LUTHRA;UGUR SAHIN~ 33:US ~31:63/114,478 ~32:16/11/2020;33:EP ~31:PCT/EP2020/082602 ~32:18/11/2020;33:US ~31:63/115,128 ~32:18/11/2020;33:US ~31:63/115,588 ~32:18/11/2020;33:US ~31:63/135,723 ~32:10/01/2021;33:US ~31:63/149,372 ~32:15/02/2021;33:EP ~31:PCT/EP2021/059460 ~32:12/04/2021

2023/05094 ~ Complete ~54:OLIGONUCLEOTIDE AND USE THEREOF AGAINST HEPATITIS B VIRUS AND HEPATITIS D VIRUS ~71:ZHEJIANG PALO ALTO PHARMACEUTICALS, INC, Room 301 And 302, Building 1, 889 Century Avenue, Kecheng District, Quzhou, Zhejiang, 324099, People's Republic of China ~72: LU, Chunping;WU, Zhongshan;XI, Zhijian~ 33:CN ~31:CN202011282529.9 ~32:16/11/2020

2023/05069 ~ Complete ~54:COATED STEEL SHEET AND HIGH STRENGTH PRESS HARDENED STEEL PART AND METHOD OF MANUFACTURING THE SAME ~71:ARCELORMITTAL, 24-26, Boulevard

d'Avranches, Luxembourg ~72: Alice DUMONT;Clément PHILIPPOT;Deborah HERRY;Martin BEAUVAIS~ 33:IB ~31:PCT/IB2020/062044 ~32:16/12/2020

2023/05046 ~ Complete ~54:A PORTABLE DETECTION DEVICE FOR STEEL CONCRETE COMPOSITE STRUCTURE ~71:CHINA CONSTRUCTION SECOND ENGINEERING BUREAU LTD., 251 Beiyangwa, Liyuan Town, Tongzhou District, Beijing, People's Republic of China;Central South University, Zuojialong, Yuelu Mountain, Changsha, People's Republic of China;THE FIRST CONSTRUCTION ENGINEERING COMPANY LTD. OF CHINA CONSTRUCTION SECOND ENGINEERING BUREAU, Floors 1-7, Building 1, Yard 9, Kechuang 4th Street, Beijing Economic and Technological Development Zone, Daxing District, Beijing, People's Republic of China ~72: LEI TANG;SHOUWEN LI;TAOPING YE;TIANLI HUANG;XIAOLIANG ZHANG;ZHIPENG GONG;ZHONG ZHOU~ 33:CN ~31:202221986111.0 ~32:29/07/2022

2023/05048 ~ Complete ~54:A WALL VERTICALITY DETECTION DEVICE USED IN BUILDING ACCEPTANCE ~71:China Construction Second Engineering Bureau Shenzhen Construction Investment Development Co., Ltd., Room 2407-08, Chuangtou Mansion, No. 9 Tengfei Road, Longgang District, Shenzhen, People's Republic of China;THE FIRST CONSTRUCTION ENGINEERING COMPANY LTD. OF CHINA CONSTRUCTION SECOND ENGINEERING BUREAU, Floors 1-7, Building 1, Yard 9, Kechuang 4th Street, Beijing Economic and Technological Development Zone, Daxing District, Beijing, People's Republic of China ~72: HONGZE LI;XIANGYU LI;XIAOYA JIANG;XIAOYAN LIU;YUNLIANG MA~ 33:CN ~31:202222972792.1 ~32:08/11/2022

2023/05049 ~ Complete ~54:DETECTION METHOD FOR RESIDUAL AMOUNTS OF CYHALOFOP-BUTYL AND CYHALOFOP-ACID IN GRAINS AND OILSEEDS ~71:ALASHANKOU CUSTOMS TECHNOLOGY CENTER, NO. 58, JUNGGAR ROAD, People's Republic of China ~72: CHEN, Wei;DAI, Long;DI, Jie;LI, Lan;LIU, Haili;LV, Xinming;SUN, Chunxiao;WANG, Dong;WANG, Ke;XU, Xin;XU, Xinzhong;YANG, Li;YEDENG, Chaole;ZHANG, Yimeng~ 33:CN ~31:202310463255.0 ~32:24/04/2023

2023/05061 ~ Complete ~54:AEROSOL GENERATING ARTICLE WITH FRONT END PLUG ~71:PHILIP MORRIS PRODUCTS S.A., Quai Jeanrenaud 3, Switzerland ~72: CAMPITELLI, Gennaro;UTHURRY, Jerome~ 33:EP ~31:20201052.6 ~32:09/10/2020

2023/05062 ~ Complete ~54:AEROSOL-GENERATING ARTICLE WITH NON-HOMOGENISED TOBACCO SUBSTRATE ~71:PHILIP MORRIS PRODUCTS S.A., Quai Jeanrenaud 3, Switzerland ~72: UTHURRY, Jerome~ 33:EP ~31:20201025.2 ~32:09/10/2020

2023/05066 ~ Complete ~54:WIND-CLEANED PHOTOVOLTAIC SOLAR PANEL ~71:DUSTOSS LTD, Mevo Hareches 39, Israel ~72: MAZOUZ, Lidor;SEFI, Hadar;SEFI, Yoel~ 33:US ~31:63/113,997 ~32:16/11/2020;33:WO ~31:PCT/IB2021/060602 ~32:16/11/2021

2023/05059 ~ Complete ~54:INTEGRATED COMPUTER DESK ~71:SICHUAN VOCATIONAL SCHOOL OF COMMUNICATION, 8 Jialing Road, Wuhou District, Chengdu, Sichuan, 610047, People's Republic of China ~72: Dan LI;DingGuo ZHANG;Feng YANG;Hui CHEN;Rui LI;Yuyang XIA~

2023/05070 ~ Complete ~54:PROCESS AND EQUIPMENT TO LASER CUT VERY HIGH STRENGTH METALLIC MATERIAL ~71:ARCELORMITTAL, 24-26, Boulevard d'Avranches, Luxembourg ~72: Bert VAN WEZEMAEL~ 33:IB ~31:PCT/IB2020/061042 ~32:23/11/2020

2023/05077 ~ Complete ~54:PLATED STEEL MATERIAL ~71:NIPPON STEEL CORPORATION, 6-1, Marunouchi 2-chome, Chiyoda-ku, TOKYO 100-8071, JAPAN, Japan ~72: GOTO, Yasuto;SAITO, Mamoru~ 33:JP ~31:2020-176669 ~32:21/10/2020

2023/05078 ~ Complete ~54:COMPOUNDS AND USES THEREOF ~71:Foghorn Therapeutics Inc., 500 Technology Square, Suite 700, CAMBRIDGE 02139, MA, USA, United States of America ~72: HUANG, David S.;NEGRETTI, Solymar;SCHILLER, Shawn E.R.;VASWANI, Rishi G.;VOIGT, Johannes H.;WILSON, Kevin J.~ 33:US ~31:63/112,126 ~32:10/11/2020

2023/05079 ~ Complete ~54:WOUND CORE, METHOD FOR MANUFACTURING WOUND CORE, AND WOUND CORE MANUFACTURING DEVICE ~71:NIPPON STEEL CORPORATION, 6-1, Marunouchi 2-chome, Chiyoda-ku, TOKYO 1008071, JAPAN, Japan ~72: IWAKI , Masataka;MIZUMURA, Takahito;MOGI, Hisashi~ 33:JP ~31:2020-178560 ~32:26/10/2020

2023/05082 ~ Complete ~54:NOVEL GLUTAMINE ANALOGS ~71:JACOBIO PHARMACEUTICALS CO., LTD., Unit 2, Building 5, BYBP, No.88 Kechuang Street 6th, Business Development Area, Daxing, Beijing, 101111, People's Republic of China ~72: CUNBO MA;JING XIONG;RUNZE LI;WEI LONG;YANPING WANG;ZHENCHANG LIAN~ 33:CN ~31:PCT/CN2020/121114 ~32:15/10/2020;33:CN ~31:PCT/CN2021/072111 ~32:15/01/2021;33:CN ~31:PCT/CN2021/076491 ~32:10/02/2021

2023/05083 ~ Complete ~54:LAUNDRY SOAP BAR COMPOSITION ~71:UNILEVER GLOBAL IP LIMITED, Port Sunlight, Wirral, Merseyside, CH62 4ZD, United Kingdom ~72: ANGELA JOY KOW;ARUN M MANGAVE;DARRIUS PILLAY;GANESH KHEDKAR~ 33:EP ~31:20213003.5 ~32:10/12/2020

2023/05097 ~ Complete ~54:A POSITIONING TOOL FOR ACRYLIC SHEET PROCESSING ~71:ANHUI MAIMING ACRYLIC TECHNOLOGY LTD., Intersection Of Longshu East Road And Wujiao Road, Lu'an Economic Development Zone Lu'an, People's Republic of China ~72: Qiang LIU;Ruojin CHEN;Xiaohua LI;Yuhong CHEN;Zhengqing XU~ 33:CN ~31:202222880600.4 ~32:31/10/2022

2023/05100 ~ Complete ~54:HERICIUM ERINACEUS DIETARY FIBER, PREPARATION METHOD AND APPLICATION THEREOF ~71:Jilin Agricultural University, 2888 Xincheng Street, Nanguan District, Changchun City, Jilin Province, People's Republic of China ~72: LIU Tingting;WANG Dawei;ZHANG Yanrong~ 33:CN ~31:2020115461716 ~32:24/12/2020

2023/05089 ~ Complete ~54:DETERGENT COMPOSITIONS ~71:UNILEVER GLOBAL IP LIMITED, Port Sunlight, Wirral, Merseyside, CH62 4ZD, United Kingdom ~72: KATHERINE MARY THOMPSON~ 33:EP ~31:20212199.2 ~32:07/12/2020

2023/05093 ~ Complete ~54:NON-AQUEOUS GEL COMPOSITION ~71:ACOUSIA THERAPEUTICS GMBH, Sindelfinger Strasse 3, Germany ~72: BÖGERSHAUSEN, Ansgar;LIEBICH, Lena;RISCHER, Matthias~ 33:EP ~31:20208665.8 ~32:19/11/2020

2023/05096 ~ Complete ~54:AN EASY-TO-INSTALL TELESCOPIC SPINNING MACHINE RUBBER ROLLER ~71:ANHUI LANXIANG TEXTILE MACHINERY TECHNOLOGY CO., LTD., Xincheng 2nd Road, Economic And Technological Development Zone Lu'an, People's Republic of China ~72: Chao ZHANG;Licai ZHUO~ 33:CN ~31:202210206113.1 ~32:03/03/2022

2023/05099 ~ Complete ~54:AN AUXILIARY DEVICE FOR DETECTING MOTOR SHAFT ~71:ZONQ MOTOR CO., LTD., No. 460, Yuanheng Road, Lu'an Economic And Technological Development Zone Lu'an, People's Republic of China ~72: Bo LIN;Husheng CHEN;Jiachun ZHANG;Lingrong YE;Zexin SONG~ 33:CN ~31:202222167283.1 ~32:17/08/2022

2023/05034 ~ Complete ~54:METHOD FOR GRAFTING COFFEE TREE WITH HIGH SURVIVAL RATE WITHOUT AFFECTING YIELDS AND APPLICATION THEREOF ~71:Baoshan Longyang Zuoyuan Coffee Co., Ltd., Zuoyuan Coffee Company, Kaxiang Academy, Lujiang Town, Baoshan City, Yunnan Province, 678000,

People's Republic of China;Flavor Beverage Institute, Chinese Academy of Tropical Agricultural Sciences, Tropical Botanical Garden, Xinglong Town, Wanning City, Hainan Province, 571533, People's Republic of China;Institute of Tropical and Subtropical Economic Crops, Yunnan Academy of Agricultural Sciences, No. 518, Lancheng Road, Longyang District, Baoshan City, Yunnan Province, 678000, People's Republic of China ~72: CHENG, Jinhuan;DONG, Wenjiang;FAN, Qizuo;FAN, Wenhao;FU, Xingfei;HE, Hongyan;HUANG, Jiaxiong;LI, Guiping;LI, Yanan;LI, Yaqi;LOU, Yuqiang;WU, Ruirui;YANG, Chongzhen;YU, Haohao~ 33:CN ~31:2023102869307 ~32:22/03/2023

2023/05040 ~ Complete ~54:A BOTTOM SUPPORTING PLATE STRUCTURE BASED ON RAFT INSTALLATION ~71:CHINA CONSTRUCTION SECOND ENGINEERING BUREAU LTD., 251 Beiyangwa, Liyuan Town, Tongzhou District, Beijing, People's Republic of China ~72: DONG YAN;GE LU;HONGYAN ZENG;JUNREN CHENG;LILI MA;PAN LI;WEI XUE;WENYI ZOU;XING HUANG;YIN ZOU~ 33:CN ~31:202221775891.4 ~32:11/07/2022

2023/05044 ~ Complete ~54:PREFABRICATED DEVICE FOR CRACKED SPECIMENS OF AMORPHOUS ALLOY FILMS ~71:JINHUA POLYTECHNIC, No.888 Haitang West Road, Wucheng District, Jinhua City, Zhejiang Province, 321000, People's Republic of China ~72: CHEN, Yuan;GE, Jianya;LV, Feng;TANG, Jinhua;YANG, Xiaohong;ZHANG, Zhengzhong~

2023/05050 ~ Complete ~54:A COOLING SYSTEM ~71:GOUWS, Johannes, Cornelius,, 7 KOORSBOOM CRES, LEPHALALE 0557, SOUTH AFRICA, South Africa ~72: GOUWS, Johannes, Cornelius,~ 33:ZA ~31:2022/06140 ~32:02/06/2022

2023/05052 ~ Complete ~54:PEDICLE SCREW ~71:ORTHO-CENTRIC INNOVATIONS (PTY) LTD, 3 JAMAICAN MUSIC, MOOIKLOOF EQUESTRIAN ESTATE, PRETORIA EAST, 0059, SOUTH AFRICA, South Africa ~72: O'TOOLE, John, James~ 33:ZA ~31:2022/04682 ~32:28/04/2022

2023/05053 ~ Complete ~54:CLIP ~71:HARVEST BAGS (PTY) LTD., Factory 5, Stand 64, Eight Street, Babalegi, Gauteng, 0407, South Africa ~72: GIDEON JAKOBUS VAN WYK;XIAODONG SUN;ZHENMING HU~ 33:ZA ~31:2022/01636 ~32:08/02/2022

2023/05058 ~ Complete ~54:MODULAR BUILDING ASSEMBLY STRUCTURE AND ASSEMBLY METHOD ~71:CHINA CONSTRUCTION FIFTH ENGINEERING BUREAU CO., LTD., No. 158 Zhongyi 1st Road, Yuhua District, Changsha, Hunan Province, 41000, People's Republic of China;GUANGDONG ZHONGSHI CONSTRUCTION CO., LTD, Room 1005, 10th Floor, No. 58 Wanchuang Road, Tangjiawan Town, High Tech Zone, Zhuhai City, Guangdong Province, 519085, People's Republic of China ~72: HE, Guiliang;QIU, Yang;WANG, Qirong;XIE, Weidong;ZHOU, Yi~

2023/05074 ~ Complete ~54:MACHINE FOR TREATING CONTAINERS ~71:Makro Labelling S.r.l., Via S. Giovanna d' Arco 9, Goito, MANTOVA 46044, ITALY, Italy ~72: BECCARI, Massimo;MARCANTONI, Simone;VEZZONI, Davide~ 33:IT ~31:102020000023848 ~32:09/10/2020

2023/05081 ~ Complete ~54:CORROSION PROTECTION DEVICE, AND METHOD FOR CORROSION-PROTECTED ANCHORING OF AN ANCHOR ELEMENT ~71:GEOBRUGG AG, Aachstrasse 11, Switzerland ~72: Manuel EICHER~ 33:DE ~31:10 2020 132 950.4 ~32:10/12/2020

2023/05086 ~ Complete ~54:METHODS AND COMPOSITIONS COMPRISING HERBICIDALLY ACTIVE COMPOUNDS AND THIOCYANATE COMPOUNDS FOR CONTROLLING WEED GROWTH ~71:MUSTGROW BIOLOGICS CORP., 1005B-201, 1st Avenue South, Saskatoon, Saskatchewan, S7K 1J5, Canada ~72: COLIN BLETSKY;COREY GIASSON;DAVID MAENZ;TODD LAHTI~ 33:US ~31:63/094,517 ~32:21/10/2020;33:US ~31:63/094,540 ~32:21/10/2020

2023/05064 ~ Complete ~54:DISTRIBUTED ACOUSTIC SENSOR ARRANGEMENT AND DISTRIBUTED ACOUSTIC SENSOR SYSTEM, INTRUSION DETECTION SYSTEM AND METHOD FOR INTRUSION DETECTION ~71:SPIDERWEB LABS (PTY) LTD, 3 The Network, 18 Cactus Road, South Africa ~72: Ian Charles DU TOIT~

2023/05101 ~ Provisional ~54:LIGHT WEIGHT CONCRETE PANEL ~71:POLYCRETE ECO-PANELS PTY LTD, SUITE NO.7, 106 JOHAN AVENUE, DENNEHOF, South Africa ~72: SUPRA CARL FREDERICK WILHELM~

2023/05025 ~ Provisional ~54:THE WALL OF SUSTENANCE ~71:JJ Sewraj Govender, 49 Allen Road, South Africa ~72: JJ Sewraj Govender~

2023/05088 ~ Complete ~54:A HARD SURFACE CLEANING COMPOSITION ~71:UNILEVER GLOBAL IP LIMITED, Port Sunlight, Wirral, Merseyside, CH62 4ZD, United Kingdom ~72: ARIJIT BERA;JIJI PAUL KOTTUKAPALLY~ 33:EP ~31:20212124.0 ~32:07/12/2020

2023/05027 ~ Provisional ~54:SMART LUGGAGE LOCK MECHANISM ~71:Anathi Mncono, 331 Nu 14 Mdantsane, East London, Eastern Cape, 5219, South Africa ~72: Anathi Mncono~

2023/05035 ~ Complete ~54:SERS PROBE BIOSENSOR AND PREPARATION METHOD AND USE METHOD THEREOF ~71:Hainan Medical University, No. 3, Xueyuan Road, Longhua District, Haikou City, Hainan Province, 571199, People's Republic of China ~72: CHENG, Ziyi;LIU, Heng;WU, Linxu;YU, Fabiao;ZHAO, Linlu~

2023/05038 ~ Complete ~54:ROBOT FOR AUTOMOTIVE STEERING PERFORMANCE TESTING IN EMC LABORATORY ~71:CIMC Huanyu (Shandong) Vehicle Certification Testing Co., Ltd., No. 1266, Chongde Fifth Avenue, Yuanqiao Town, Economic and Technological Development Zone, Dezhou, Shandong Province, 253000, People's Republic of China ~72: HUANG, Xiaobo;TIAN, Xiaochong~

2023/05041 ~ Complete ~54:AN ABRUPT SLOPE SUPPORTING STRUCTURE WITH ANTI-SLIDING SOIL RETAINING FUNCTION ~71:CHINA CONSTRUCTION SECOND ENGINEERING BUREAU LTD., 251 Beiyangwa, Liyuan Town, Tongzhou District, Beijing, People's Republic of China;Central South University, Zuojialong, Yuelu Mountain, Changsha, People's Republic of China;THE FIRST CONSTRUCTION ENGINEERING COMPANY LTD. OF CHINA CONSTRUCTION SECOND ENGINEERING BUREAU, Floors 1-7, Building 1, Yard 9, Kechuang 4th Street, Beijing Economic and Technological Development Zone, Daxing District, Beijing, People's Republic of China ~72: DIDONG CHEN;JIAQI FENG;LIANGWEI YU;SHOUWEN LI;XIAOLIANG ZHANG;YAXIN DING;ZHIPENG GONG;ZHONG ZHOU~ 33:CN ~31:202221686125.0 ~32:01/07/2022

2023/05043 ~ Complete ~54:FLAME-RETARDANT DEGRADABLE EPOXY RESIN BASED ON A PHOSPHONATE STRUCTURE AND ITS PREPARATION METHOD ~71:Taiyuan University of Technology, No. 79, Yingze West Street, Taiyuan City, Shanxi Province, 030000, People's Republic of China ~72: Chao MA;Xiaomin WANG;Yang MIAO~ 33:CN ~31:202310425795X ~32:20/04/2023

2023/05071 ~ Complete ~54:SHOWER SET WITH CONCEALED HOSE ~71:STROHM BATHROOM SOLUTIONS S.A., Calle Conquistador, 2, Spain ~72: Roberto LADRÓN JIMÉNEZ~ 33:ES ~31:P202031170 ~32:23/11/2020

2023/05075 ~ Complete ~54:SYSTEM OF INTERNALLY BACKMIXING THE REACTIVE MASS IN A ROTATING CYLINDER REACTOR ~71:Tecnored Desenvolvimento Tecnologico S.A., Rua Marechal Deodoro nº 18, salas 05 e 06, PINDAMONHANGABA 12401-010, SP, BRAZIL, Brazil ~72: BRASIL, Ludmila Lopes Nascimento;DA SILVA, Ezequiel;DE OLIVEIRA, Ronald Lopes;FRÓIS, Fabrício Tinôco;GONÇALVES, Guilherme Francisco;POTTER, Stephen Michael;SOARES, Álvaro Guedes~ 33:BR ~31:102020022740-8 ~32:09/11/2020

. - APPLIED ON 2023/05/09 -

2023/05268 ~ Provisional ~54:LIVESTOCK INSURANCE ~71:Sinethemba Christian Zikalala, 95 Mowbray, South Africa ~72: Sinethemba Christian Zikalala~

2023/05104 ~ Provisional ~54:SILKE KANNIE STEEL ~71:Jens Kuhn, 12 Molteno Street, South Africa ~72: Jens Kuhn~

2023/05129 ~ Complete ~54:RECOMBINANT HVT AND USES THEREOF ~71:Ceva Sante Animale, 10 Avenue de la Ballastière, LIBOURNE 33500, FRANCE, France ~72: ESAKI, Motoyuki;PALYA, Vilmos;PENZES, Zoltan;TATAR, Timea~ 33:EP ~31:20306212.0 ~32:15/10/2020

2023/05136 ~ Complete ~54:THREE-POINT SUPPORT BATTERY COMPARTMENT FOR PURE ELECTRIC MINING VEHICLE AND BATTERY SHOCK ABSORPTION SYSTEM ~71:Henan Yuexin Intelligent Machinery Co., Ltd., Industrial Cluster, Xincheng District, PINGDINGSHAN 467000, HENAN, CHINA (P.R.C.), People's Republic of China ~72: YANG, Hui;YE, Yongwang;ZHANG, Jinlong;ZHAO, Qianyang;ZHU, Yaozhan~ 33:CN ~31:202022236610.5 ~32:10/10/2020

2023/05116 ~ Complete ~54:ESTABLISHMENT OF UNLABELED QUANTITATIVE METHOD FOR DETECTING COLLAGEN IN LUNG TISSUE ~71:Anhui Shendong Biotechnology Development Co., Ltd., 501,Floor 5, Building A, Innovation and Entrepreneurship Center, Taining Street, Shannan New District, Huainan City, Anhui Province, People's Republic of China ~72: LI Bing;MU Min;TAO Xinrong;WANG Wenyang~ 33:CN ~31:2021112079777 ~32:18/10/2021

2023/05119 ~ Complete ~54:METHODS FOR DIAGNOSING OR TREATING HEALTH CONDITIONS OR OPTIMIZING THERAPEUTIC EFFICACY OF CAR-T CELLS THERAPIES ~71:THE BOARD OF TRUSTEES OF THE LELAND STANFORD JUNIOR UNIVERSITY, Office of the General Counsel Building 170, Third Floor, Main Quad, P.O. Box 203, Stanford, California, 94305, United States of America ~72: ARASH ASH ALIZADEH;BRIAN SWORDER;CHRISTOPHER MOUNT;CRYSTAL L MACKALL;DAVID B MIKLOS;DAVID M KURTZ;MATTHEW FRANK;MICHELLE MONJE-DEISSEROTH;ROBBIE MAJZNER;YASODHA NATKUNAM~ 33:US ~31:63/109,611 ~32:04/11/2020

2023/05125 ~ Complete ~54:CONTENT FILTERING SUPPORT FOR PROTOCOLS WITH ENCRYPTED DOMAIN NAME SERVER ~71:TELEFONAKTIEBOLAGET LM ERICSSON (PUBL), 16483, Sweden ~72: MUÑOZ DE LA TORRE ALONSO, Miguel Angel~ 33:EP ~31:20382975.9 ~32:11/11/2020

2023/05132 ~ Complete ~54:HEADERS CLIENT FOR DETERMINING THE BEST CHAIN ~71:nChain Licensing AG, Grafenauweg 6, ZUG 6300, SWITZERLAND, Switzerland ~72: FLETCHER, Michael;MEE, Andrew James~ 33:GB ~31:2106950.5 ~32:14/05/2021

2023/05134 ~ Complete ~54:WOUND CORE ~71:NIPPON STEEL CORPORATION, 6-1, Marunouchi 2-chome, Chiyoda-ku, TOKYO 100-8071, JAPAN, Japan ~72: NAKAMURA Shuichi~ 33:JP ~31:2020-178553 ~32:26/10/2020

2023/05135 ~ Complete ~54:PURE ELECTRIC MINING DUMP TRUCK ~71:Yuexin Contemporary Amperex Technology Co., Ltd, Zhihuidao Building, Longzihu, ZHENGZHOU 450000, HENAN, CHINA (P.R.C.), People's Republic of China ~72: YANG, Hui;YE, Yongwang;ZHANG, Jinlong;ZHU, Yaozhan~ 33:CN ~31:202022252844.9 ~32:10/10/2020

2023/05137 ~ Complete ~54:USE OF ISATUXIMAB FOR THE TREATMENT OF MULTIPLE MYELOMA ~71:SANOFI-AVENTIS U.S. LLC, 55 Corporate Drive, Bridgewater, United States of America ~72: SEMIOND,

Dorothee;THAI, Hoai-Thu;VAN DE VELDE, Helgi;VEYRAT-FOLLET, Christine~ 33:US ~31:63/109,305 ~32:03/11/2020;33:US ~31:63/239,108 ~32:31/08/2021

2023/05126 ~ Complete ~54:DICHLOROPHENOL HSD17B13 INHIBITORS AND USES THEREOF ~71:INIPHARM, INC., 500 108th Avenue NE, Suite 1100, United States of America ~72: ANANDAN, Sampath Kumar;DURAISWAMY, Athisayamani Jeyaraj;FLORIO, Vincent;HSU, Heather Kay Webb;ODINGO, Joshua;TANTRY, Subramanyam Janardhan~ 33:US ~31:63/113,555 ~32:13/11/2020;33:US ~31:63/113,557 ~32:13/11/2020;33:US ~31:63/170,855 ~32:05/04/2021;33:US ~31:63/225,282 ~32:23/07/2021

2023/05131 ~ Complete ~54:A COMPUTER IMPLEMENTED METHOD AND SYSTEM OF MAINTAINING A STATUS OF A STREAM ON A BLOCKCHAIN ~71:nChain Licensing AG, Grafenauweg 6, ZUG 6300, SWITZERLAND, Switzerland ~72: RAND, Ricky Charles~ 33:GB ~31:2108385.2 ~32:11/06/2021

2023/05133 ~ Complete ~54:AEROSOL PROVISION SYSTEM WITH CHARGE LEVEL INDICATOR ~71:Nicoventures Trading Limited, Globe House, 1 Water Street, LONDON WC2R 3LA, UNITED KINGDOM, United Kingdom ~72: TOMI, Vintola~ 33:GB ~31:2019031.0 ~32:02/12/2020

2023/05138 ~ Complete ~54:HUMAN PAPILLOMA VIRUS VACCINES AND USES OF THE SAME FOR HPV ASSOCIATED DISEASES ~71:PRECIGEN, INC., 1750 Kraft Drive, Suite 1400, United States of America ~72: BROUGH, Douglas, E.;ETTYREDDY, Damodar, R,;WANG, Chen;YANG, Qi~ 33:US ~31:63/118,222 ~32:25/11/2020

2023/05115 ~ Complete ~54:HIGH-EFFICIENCY DENITRIFICATION AND DEPHOSPHORIZATION PROCESS SYSTEM FOR SEAWATER AQUACULTURE TAIL WATER TREATMENT ~71:TIANJIN RESEARCH INSTITUTE FOR WATER TRANSPORT ENGINEERING,M.O.T., NO.2618 Xingang No.2 Road, Binhai New Area, Tianjin City, 300456, People's Republic of China ~72: CHANG Fang;LI Huiting;LI Zhendong;SHANG Hao;WANG Jiangnan;WANG Tingfeng;YI Malan;ZHANG Lu;ZHAO Yingjie~ 33:CN ~31:2021112159396 ~32:19/10/2021

2023/05142 ~ Provisional ~54:WIND TURBINES ~71:Mario Swanepoel, 21 7th Avenue, South Africa ~72: Mario swanepoel~

2023/05111 ~ Complete ~54:A PREPARATION METHOD OF CLOSED ISOCYANATE WHICH CAN BE EFFICIENTLY UNSEALED AT LOW TEMPERATURE ~71:Guizhou Minzu University, Dongjia Weir in Huaxi District, Guiyang City, Guizhou Province, 550025, People's Republic of China ~72: Daohai ZHANG;Fang TAN;Zhusheng YANG~

2023/05122 ~ Complete ~54:PROPHYLAXIS AND TREATMENT OF ANGIOEDEMA ~71:PHARVARIS GMBH, Grafenauweg 8, 6300 Zug, Switzerland ~72: ANNE LESAGE;PENG LU~ 33:EP ~31:20207273.2 ~32:12/11/2020

2023/05124 ~ Complete ~54:SAFE HARBOR LOCI ~71:ARSENAL BIOSCIENCES, INC., 2 Tower Place, Suite 700, South San Francisco, United States of America ~72: COOPER, Aaron;GALVIN, Brendan;KHARE, Somya;NGUYEN, Michelle;YAO, Anzhi;ZHENG, Xinying~ 33:US ~31:63/105,834 ~32:26/10/2020;33:US ~31:63/141,926 ~32:26/01/2021;33:US ~31:63/179,143 ~32:23/04/2021

2023/05130 ~ Complete ~54:MERKLE PROOF ENTITY ~71:nChain Licensing AG, Grafenauweg 6, ZUG 6300, SWITZERLAND, Switzerland ~72: AMMAR, Bassem;DAVIES, Jack Owen;WRIGHT, Craig Steven;ZHANG, Wei~ 33:GB ~31:2017729.1 ~32:10/11/2020

2023/05139 ~ Complete ~54:T CELL RECRUITING POLYPEPTIDES BASED ON TCR ALPHA/BETA REACTIVITY ~71:ABLYNX NV, Technologiepark 21, Zwijnaarde, Belgium;SANOFI, 46 Avenue de la Grande,

France ~72: NEYT, Katrijn;ROOBROUCK, Annelies;STAELENS, Stephanie;VAN BELLE, Tom;VAN HOORICK, Diane;VERHELST, Judith~ 33:EP ~31:20306608.9 ~32:18/12/2020;33:EP ~31:EP21306822.4 ~32:17/12/2021;33:EP ~31:PCT/EP2021/086556 ~32:17/12/2021

2023/05140 ~ Complete ~54:METHOD FOR DIAGNOSING AMYLOID DISEASES ~71:UNIVERSITY OF TENNESSEE RESEARCH FOUNDATION, 400 W Summit Hill Dr., UT Tower 961A, United States of America ~72: HEIDEL, Robert, Eric;WALL, Jonathan, S.~ 33:US ~31:63/121,779 ~32:04/12/2020

2023/05121 ~ Complete ~54:PLASTER COMPOSITION FOR FIRE RESISTANT PLASTERBOARD ~71:ETEX BUILDING PERFORMANCE INTERNATIONAL SAS, 500 rue Marcel Demonque, Zone du Pôle Technologique Agroparc, 84915, Avignon, France ~72: DANIEL MARTIN;JEAN-PHILIPPE BOISVERT~ 33:EP ~31:20306392.0 ~32:17/11/2020

2023/05123 ~ Complete ~54:SURFACE MODIFICATION TO REGULATE PLANT GROWTH ~71:BIND-X GMBH, Am Klopferspitz 19, Germany ~72: Jan-Philip MERKL;Luitpold FRIED~

2023/05127 ~ Complete ~54:ANALYTE DETECTION METHOD EMPLOYING CONCATEMERS ~71:Olink Proteomics AB, Uppsala Science Park, UPPSALA SE-751 83, SWEDEN, Sweden ~72: BROBERG, John;HENRIKSSON, Sara;KUNDERU, Gowtham Nicklesh;LUNDBERG, Martin~ 33:GB ~31:2018503.9 ~32:25/11/2020

2023/05103 ~ Provisional ~54:CONDIMENT PACKAGING ~71:GOOD KNIGHT BEDDING (PTY) LTD, 100A Club Ave, Waterkloof Ridge, South Africa ~72: MEYER, Richard John~

2023/05107 ~ Complete ~54:LANDFILL CONSTRUCTION DEVICE FOR INDUSTRIAL SOLID WASTE DISPOSAL ~71:Anhui Ganghao Jiangnan Ecological Environment Technology Co., Ltd, No. 6299, Lingjiang Middle Road, Tongling City, Anhui Province, 244000, People's Republic of China ~72: DENG, Guangzhu;GU, Yuan;HU, Ling;YANG, Yang;ZHOU, Yong~ 33:CN ~31:2022110201482 ~32:24/08/2022

2023/05109 ~ Complete ~54:LINER FOR FRESH PRODUCE TRANSPORTATION BINS ~71:SMIT, Hendrik, Jacobus, 6 HIEBNER CRESCENT, NORTHERN PAARL, PAARL, SOUTH AFRICA, South Africa ~72: SMIT, Hendrik, Jacobus~ 33:ZA ~31:2022/04758 ~32:29/04/2022

2023/05113 ~ Complete ~54:METHOD FOR RAPIDLY IDENTIFYING PURITY OF WATERMELON HYBRID SEEDS ~71:WUHAN ACADEMY OF AGRICULTURAL SCIENCES, 1 ZHANGJIAWAN SPECIAL, People's Republic of China ~72: CHENG, Weishun;DU, Lei;HONG, Juan;HUANG, Xiang;LUO, Qian;TANG, Mi;WANG, Suping;ZENG, Hongxia;ZHANG, Na~ 33:CN ~31:202310500979.8 ~32:27/04/2023

2023/05120 ~ Complete ~54:A GENETICALLY MODIFIED YEAST CELL FOR HEMOGLOBINS PRODUCTION ~71:CHRYSEA LIMITED, The Capel Building, Suite 401, Mary's Abbey, Dublin, D07 P4AX, Ireland ~72: DINA PETRANOVIC NIELSEN;OLENA ISHCHUK~ 33:SE ~31:2051317-2 ~32:11/11/2020

2023/05128 ~ Complete ~54:FORMULATIONS, METHODS, KITS, AND DOSAGE FORMS ~71:MedRegen, LLC, 855 N. Wolfe Street, Suite 623-3, BALTIMORE 21205, MD, USA, United States of America ~72: AGYEMANG, Isaac;BREWER, Richard;EATMON, Christy;GRIFFIN, Jared;LABELL, Rachel;LIU, Zhimin;SUN, John;SUN, Zhaoli;WILLIAMS, Mitchell~ 33:US ~31:63/111,895 ~32:10/11/2020

2023/05106 ~ Complete ~54:PREFABRICATED CONNECTING STRUCTURE FOR BOX-TYPE STEEL COLUMN AND PEC BEAM ~71:Henan University of Urban Construction, Longxiang Avenue, Xincheng District, Pingdingshan City, Henan Province, 467041, People's Republic of China ~72: BAI, Zhe;LI, Shuai;MA, Qiuge;NIU, Ganggang;NIU, Haoliang;XUE, Na;ZHANG, Yongcun;ZHENG, Chao~

2023/05114 ~ Complete ~54:TRIPLE VIABLE BACTERIAL MICROCAPSULE AND PREPARATION METHOD THEREFOR ~71:ANIMAL HUSBANDRY RESEARCH INSTITUTE OF HEILONGJIANG ACADEMY OF AGRICULTURAL SCIENCES, NO. 368 XUEFU ROAD, People's Republic of China ~72: LI, Manyu;LIU, Yufeng;ZHANG, Yuanliang;ZHENG, Dianzhong~

2023/05118 ~ Complete ~54:DEGRADANT COMPOUND IN A MEDICAMENT ~71:VISUS THERAPEUTICS, INC., 2 Nickerson Street, Suite 101, Seattle, Washington, 98109, United States of America ~72: BRUCE ALAN FIRESTONE;RHETT MEAD SCHIFFMAN~ 33:US ~31:63/108,720 ~32:02/11/2020;33:US ~31:63/162,367 ~32:17/03/2021;33:US ~31:63/257,024 ~32:18/10/2021

2023/05108 ~ Complete ~54:FUSION METHOD, DEVICE AND ELECTRONIC EQUIPMENT OF MULTI-SOURCE BATHYMETRY DATA ~71:SECOND INSTITUTE OF OCEANOGRAPHY, MNR, No. 36, Baochu North Road, Xihu District, Hangzhou City, Zhejiang Province, 310012, People's Republic of China ~72: BAO, Min;HAN, Huiyu;HUANG, Ting;LI, Jia;MENG, Qicheng;NI, Xiaobo;PENG, Yingyu;TIAN, Di;ZENG, Dingyong;ZHOU, Feng~

2023/05110 ~ Complete ~54:A METHOD FOR PREPARING A RECYCLABLE DYNAMIC COVALENT POLYDIMETHYLSILOXANE MEMBRANE ~71:Guizhou Minzu University, Dongjia Weir in Huaxi District, Guiyang City, Guizhou Province, 550025, People's Republic of China ~72: Daohai ZHANG;Fang TAN;Zhusheng YANG~

2023/05112 ~ Complete ~54:IMAGE AIDED DIAGNOSIS DEVICE ~71:The First Affiliated Hospital of Xi'an Jiao Tong University, 277 Yanta West Road, Yanta District, Xi 'an, Shaanxi, People's Republic of China ~72: Guiping XU~ 33:CN ~31:2023103934657 ~32:13/04/2023

2023/05117 ~ Complete ~54:PRODUCER CELL HAVING LOW LEVELS OF VA-RNA ~71:CEVEC PHARMACEUTICALS GMBH, Gottfried-Hagen-Str. 62 51105, Germany ~72: DO CARMO GIL GONCALVES, Ines;HEIN, Kerstin;HUDJETZ, Ben;WISSING, Silke; Steinweg~ 33:EP ~31:20215905.9 ~32:21/12/2020

2023/05105 ~ Complete ~54:ROCK-SOIL MASS SHEARING CREEPMETER CONSIDERING DRY-WET CYCLE ~71:Henan University of Urban Construction, Longxiang Avenue, Xincheng District, Pingdingshan City, Henan Province, 467041, People's Republic of China ~72: BAI, Zhe;GUO, Lulu;LI, Peng;LI, Shuai;NIU, Haoliang;ZHAI, Juyun;ZHAI, Panpan;ZHANG, Shuo;ZHENG, Chao~

. - APPLIED ON 2023/05/10 -

2023/05144 ~ Provisional ~54:BOGIE ~71:DUNCAN, Malcolm Douglas, 901 Cloud Cover Lane, Leander, United States of America ~72: DUNCAN, Malcolm Douglas~

2023/05149 ~ Complete ~54:AN EVALUATION METHOD, DEVICE, STORAGE MEDIUM, AND ELECTRONIC DEVICE ~71:Chongqing University Cancer Hospital, No. 181 Hanyu Road, Shapingba District, Chongqing, 400030, People's Republic of China ~72: Chen Mengting;Fan Hanqiu;Hui suocheng;Yang Hong;Yu Huiqing;Zhang Junhui~ 33:CN ~31:2022107452911 ~32:29/06/2022

2023/05152 ~ Complete ~54:A TRADITIONAL CHINESE MEDICINE FOR DILATING CARDIAC AND CEREBRAL VESSELS ~71:Tongcai Liu, Group 1, Sanwei, Baishan Street, Songjianghe Town, Fusong County, Baishan, Jilin, People's Republic of China ~72: Tongcai Liu~

2023/05156 ~ Complete ~54:STABLE ORAL FORMULATION CONTAINING 1-(3-CYANO-1-ISOPROPYL-INDOL-5-YL)PYRAZOLE-4-CARBOXYLIC ACID ~71:LG CHEM, LTD., 128, YEOUI-DAERO, YEONGDEUNGPO-GU, SEOUL 07336, REPUBLIC OF KOREA, Republic of Korea ~72: LEE, Sun;PARK, Junghong;SUN, Hyun Ji;YOO, Seok Cheol;YUN, Duck Il~ 33:KR ~31:10-2020-0166051 ~32:01/12/2020

2023/05173 ~ Complete ~54:DNA ENCODED NANOPARTICLES AND METHOD OF USE THEREOF AS A CORONAVIRUS DISEASE 2019 (COVID-19) VACCINE ~71:The Wistar Institute of Anatomy and Biology, 3601 Spruce Street, PHILADELPHIA 19104, PA, USA, United States of America ~72: KULP, Dan;WEINER, David;XU, Ziyang~ 33:US ~31:63/109,123 ~32:03/11/2020

2023/05163 ~ Complete ~54:INDOLE DERIVATIVES USEFUL IN TREATING CONDITIONS ASSOCIATED WITH CGAS ~71:NOVARTIS AG, Lichtstrasse 35, Switzerland ~72: CARCACHE, David;GRUBER, Florian;GUERINI, Danilo;GUNZENHAUSER, Martin;HENG, Richard;PERRUCCIO, Francesca;SIMIC, Oliver;SPANKA, Carsten~ 33:US ~31:63/128,949 ~32:22/12/2020

2023/05170 ~ Complete ~54:PROCESS FOR PRODUCING A NON-DAIRY GEL ~71:ODDLYGOOD GLOBAL OY, Meijeritie 6, Finland ~72: LEHTONEN, Kaity-Marin;MÄKINEN, Outi;MUURONEN, Klaus;SAARENTOLA, Väinö~ 33:FI ~31:20206232 ~32:01/12/2020

2023/05174 ~ Complete ~54:VARIANT ADENO-ASSOCIATED VIRUS (AAV)CAPSID POLYPEPTIDES AND GENE THERAPEUTICS THEREOF FOR TREATMENT OF HEARING LOSS ~71:Eli Lilly and Company, Lilly Corporate Center, INDIANAPOLIS 46285, IN, USA, United States of America ~72: BARTOLOME, Christopher;FOSTER, Alan C.;JACQUES, Bonnie E.;MATHUR, Pranav Dinesh;PENNOCK, Steven;PIU, Fabrice;SHEARMAN, Mark;SZOBOTA, Stephanie;TIMMERS, Adrian M.;URIBE, Phillip M.;WANG, Xiaobo~ 33:US ~31:63/110,697 ~32:06/11/2020;33:US ~31:63/146,269 ~32:05/02/2021

2023/05180 ~ Complete ~54:THERAPIES FOR CANCER USING SMALL MOLECULES THAT BIND TO AND INHIBIT RAL INTERACTING PROTEINS ~71:TEXAS TECH UNIVERSITY SYSTEM, P.O. Box 42021, Lubbock, United States of America ~72: AWASTHI, Sanjay;SINGH, Sharda~ 33:US ~31:63/115,190 ~32:18/11/2020

2023/05179 ~ Complete ~54:SHEET NIOBATES FOR USE IN PHOTOCATALYSTS ~71:TANIOBIS GmbH, IM SCHLEEKE 78-91, GOSLAR 38642, GERMANY, Germany ~72: ALBRECHT, Sven;KULISCHOW, Natalia;LADASIU CIOLACU, Flaviu Calin;MARSCHALL, Roland;SCHNITTER, Christoph~ 33:DE ~31:10 2020 214 923.2 ~32:27/11/2020

2023/05159 ~ Complete ~54:BURNER DEVICE FOR A FUEL CELL SYSTEM ~71:AVL LIST GMBH, Hans-List-Platz 1, Austria ~72: NEUBAUER, Raphael;REITER, Bernd;SCHLUCKNER, Christoph~ 33:AT ~31:A51019/2020 ~32:24/11/2020

2023/05164 ~ Complete ~54:ADMINISTRATION DEVICE FOR IN PARTICULAR INTRAVITREAL ADMINISTRATION OF A FLUID ~71:BOEHRINGER INGELHEIM INTERNATIONAL GMBH, Binger Strasse 173, Germany ~72: COLLINGS, Ralph Donald Quentin;LABAT-ROCHECOUSTE, Andrew Guy;ROTH, Axel;SCHUY, Steffen;SHARP, Nicholas James~ 33:EP ~31:20211106.8 ~32:01/12/2020

2023/05169 ~ Complete ~54:METHODS FOR STERILIZING FERMENTED BEVERAGES ~71:MARK ANTHONY INTERNATIONAL SRL, 1 Haggatt Hall, St. Michael, Barbados ~72: ANTHONY C VIEIRA;MICHAEL G PTASZNIK;TRACY L THOMPSON~ 33:US ~31:63/113,873 ~32:14/11/2020;33:US ~31:63/196,730 ~32:04/06/2021

2023/05182 ~ Complete ~54:SUPPORT FOR ROOF-MOUNTED PHOTOVOLTAIC PANEL ~71:CORDEIRO DE OLIVEIRA, Emerson, RUA Alexandre No. 123, Brazil ~72: CORDEIRO DE OLIVEIRA, Emerson~ 33:BR ~31:BR102020018812-7 ~32:15/09/2020

2023/05146 ~ Complete ~54:INTELLIGENT DRAWING SYSTEM FOR POLE DIAGRAM AND OCCURRENCE ROSE DIAGRAM ON ROCK MASS STRUCTURAL PLANE ~71:HU, Gaojian, No. 508, Huancheng West Road,

Shaoxing City, Zhejiang Province, 312000, People's Republic of China ~72: FENG, Haoran;HU, Gaojian;HU, Jianli;LIANG, Wenxu;WANG, Jie;ZHANG, Guangbin~

2023/05154 ~ Complete ~54:SYSTEM AND METHOD FOR DETECTING INSULATION DEFECTS IN AN UNDERGROUND POWER CABLE ~71:REMONI A/S, Kristiansvej 13, 8660, Skanderborg, Denmark ~72: ESKEROD MADSEN, Bo~ 33:DK ~31:PA 2020 01322 ~32:24/11/2020

2023/05158 ~ Complete ~54:NON-DAIRY PROTEIN BASED EDIBLE PRODUCT AND, PROCESS FOR MANUFACTURING THE SAME ~71:ODDLYGOOD GLOBAL OY, Meijeritie 6, Finland ~72: IMMONEN, Mika;MUURONEN, Klaus~ 33:FI ~31:20206231 ~32:01/12/2020

2023/05165 ~ Complete ~54:RADIOTHERAPY TEMPLATE ASSEMBLY ~71:ALPHA TAU MEDICAL LTD., 5 Kiryat Hamada Street, Jerusalem, Israel ~72: DANA, Niv;DEN, Robert;GAT, Amnon;MAGEN, Ofer;TAL, Sagy~ 33:US ~31:63/112,676 ~32:12/11/2020

2023/05168 ~ Complete ~54:COAGULATION FACTOR V (F5) IRNA COMPOSITIONS AND METHODS OF USE THEREOF ~71:ALNYLAM PHARMACEUTICALS, INC., 675 West Kendall Street, Henri A. Termeer Square, Cambridge, Massachusetts, 02142, United States of America ~72: JAMES D MCININCH;MARK K SCHLEGEL;MARK KEATING~ 33:US ~31:63/113,282 ~32:13/11/2020;33:US ~31:63/146,115 ~32:05/02/2021;33:US ~31:63/271,872 ~32:26/10/2021

2023/05175 ~ Complete ~54:APPARATUS FOR APPLYING PULSES AND PULSE EDGES TO A RESONANT CIRCUIT ~71:Nicoventures Trading Limited, Globe House, 1 Water Street, LONDON WC2R 3LA, UNITED KINGDOM, United Kingdom ~72: KORUS, Anton~ 33:GB ~31:2018939.5 ~32:01/12/2020

2023/05171 ~ Complete ~54:METHODS FOR MAKING, COMPOSITIONS COMPRISING, AND METHODS OF USING REJUVENATED T CELLS ~71:Lyell Immunopharma, Inc., 201 Haskins Way, SOUTH SAN FRANCISCO 94080 , CA, USA, United States of America ~72: HUANG, Yin;KLAUSNER, Richard D.;MAEDA, Takuya;RESTIFO, Nicholas;TAMAOKI, Naritaka;VIZCARDO SAKODA, Raul E.;YAMAZAKI, Yasuhiro~ 33:US ~31:63/117,787 ~32:24/11/2020;33:US ~31:63/153,881 ~32:25/02/2021;33:US ~31:63/165,093 ~32:23/03/2021

2023/05181 ~ Complete ~54:IMAGE PROCESSING METHOD AND DEVICE ~71:ZHUHAI PANTUM ELECTRONICS CO., LTD., Building 02, Building 06, Building 08, No. 888, Shengping Avenue, People's Republic of China ~72: HU, Dongcheng;SHANG, Yunying;YU, Han~ 33:CN ~31:202011140527.6 ~32:22/10/2020

2023/05147 ~ Complete ~54:METHOD FOR DETERMINING LINALOOL CONTENT OF FLOWER FRAGRANCE COMPONENTS BASED ON ELECTRIC NOSE TECHNOLOGY ~71:JINLING INSTITUTE OF TECHNOLOGY, 99 Hongjing Avenue, Jiangning District, Nanjing City, Jiangsu province, People's Republic of China ~72: CAI Junhuo;FAN Junjun;PENG Qin;PU Jing;ZAI Xueming;ZHANG Wangxiang;ZHOU Chenchen~

2023/05148 ~ Complete ~54:STABLE ASCORBIC ACID COMPOSITIONS AND METHODS OF USING THE SAME ~71:RENOVION, INC., 900 MLK Jr Blvd, Suite A, Chapel Hill, North Carolina, 27514, United States of America ~72: CAROLYN DURHAM;DAN COPELAND~ 33:US ~31:62/588,300 ~32:17/11/2017;33:US ~31:62/684,700 ~32:13/06/2018

2023/05153 ~ Complete ~54:A DRILL ROD HANDLING SYSTEM AND METHOD OF USE THEREOF ~71:GAYLARD, Cameron, 25 Duntroon St, Australia ~72: GAYLARD, Cameron~ 33:AU ~31:2022901249 ~32:11/05/2022

2023/05157 ~ Complete ~54:METHOD FOR THE TREATMENT OF WASTE MATERIAL, ARRANGEMENT AND CONSOLIDATING BINDER ~71:BETOLAR OY, MANNILANTIE 9, 43300 KANNONKOSKI, FINLAND, Finland ~72: KIVENTERÄ, Jenni;KORPPI, Maria;LAITINEN, Ari;LEPPÄNEN, Juha;PIISPANEN, Mirja;YLITALO, Kari~ 33:FI ~31:20206042 ~32:21/10/2020

2023/05162 ~ Complete ~54:IMPROVED PROCESS OF PREPARING MRNA-LOADED LIPID NANOPARTICLES ~71:TRANSLATE BIO, INC., 200 West Street, Waltham, MA, United States of America ~72: DEROSA, Frank;GILLIS, Kimberly;JEANNOTTE, Travis;KARVE, Shrirang;SHAH, Monic;ZHANG, Yi~ 33:US ~31:63/090,513 ~32:12/10/2020

2023/05167 ~ Complete ~54:SOIL REINFORCEMENT STRIP AND GRID ~71:NV BEKAERT SA, Bekaertstraat 2, 8550, Zwevegem, Belgium;SOLETANCHE FREYSSINET, 280 avenue Napoléon Bonaparte, 92506, Rueil Malmaison, France ~72: ANDRÉ LINS;BART ALLAERT;GERMAIN AURAY;KO CATTOOR;MATTHIEU ARESSY;NICOLAS FREITAG;YASSINE BENNANI BRAOULI~ 33:EP ~31:20290074.2 ~32:03/11/2020

2023/05177 ~ Complete ~54:GCN2 AND PERK KINASE INHIBITORS AND METHODS OF USE THEREOF ~71:Deciphera Pharmaceuticals, LLC, 200 Smith Street, WALTHAM 02451, MA, USA, United States of America ~72: AHN, Yu Mi;AL-ANI, Gada;FLYNN, Daniel L.;JAVED, Salim;KEARNEY, Patrick;LE BOURDONNEC, Bertrand;STOLTZ, Kristen;ZWICKER, Jeffery~ 33:US ~31:63/115,496 ~32:18/11/2020;33:US ~31:63/185,846 ~32:07/05/2021

2023/05269 ~ Complete ~54:METHODS AND COMPOSITIONS FOR IMPROVING CORN YIELD ~71:NEWLEAF SYMBIOTICS, INC., BRDG Park, 1005 North Warson Road, United States of America ~72: BOGOSIAN, Gregg;JONES, Marcus~ 33:US ~31:61/911,780 ~32:04/12/2013

2023/05143 ~ Provisional ~54:A METHOD OF ESCALATING SOCIAL MEDIA CONNECTIONS THROUGH AN ONLINE MAP GAME APPLICATION ~71:Passplane, 69 NAUTILUS STREET ATLANTIC BEACH GOLF ESTATE MELKBOSSTRAND, South Africa ~72: Hjalmar Douglas Fuchs;Passplane~ 33:ZA ~31:2022/05013 ~32:09/05/2022

2023/05145 ~ Provisional ~54:DEVISE FOR MEASURING CURVATURE ~71:Motladi Molefe Linda Lenyai, 30 Parkwood Crescent, South Africa ~72: Motladi Molefe Linda Lenyai~ 33:ZA ~31:2023/05091 ~32:09/05/2023

2023/05150 ~ Complete ~54:CAMERA ADJUSTMENT FIELD ~71:Xinyu University, 2666 Sunshine Avenue, Gaoxin District, Xinyu City, Jiangxi Province, 338004, People's Republic of China ~72: Chen Yuxian;Liao Zhongming;Xiang Zhongqi;Xu Xiuhong;Xu Zhaosheng~ 33:CN ~31:2023100327953 ~32:10/01/2023

2023/05155 ~ Complete ~54:ORAL FORMULATION COMPRISING 1-(3-CYANO-1-ISOPROPYL-INDOLE-5-YL)PYRAZOLE-4-CARBOXYLIC ACID AND METHOD FOR PREPARING SAME ~71:LG CHEM, LTD., 128, YEOUI-DAERO, YEONGDEUNGPO-GU, SEOUL 07336, REPUBLIC OF KOREA, Republic of Korea ~72: JANG, Joomyung;KIM, Ree Sun;SEO, Jin A;YOO, Seok Cheol~ 33:KR ~31:10-2020-0165790 ~32:01/12/2020

2023/05172 ~ Complete ~54:DEVICES, SYSTEMS, AND METHODS FOR CONFIGURING THE LAYOUT OF UNIT CELL OF A REACTOR CORE ~71:Westinghouse Electric Company LLC, 1000 Westinghouse Drive, Suite 141, CRANBERRY TOWNSHIP 16066, PA, USA, United States of America ~72: ALESHIN, Yuriy;HARKNESS, Alexander W.;LEVINSKY, Alex~ 33:US ~31:17/084,403 ~32:29/10/2020

2023/05176 ~ Complete ~54:STABILIZED COMPOSITIONS CONTAINING STROBILURIN FUNGICIDES AND POLYHYDRIC ALCOHOLS ~71:Adama Makhteshim Ltd., P. O. Box 60, BEER SHEVA 8410001, ISRAEL, Israel ~72: LERNER YARDENI, Jenny;SHMOELI, Eliyahu~ 33:US ~31:63/119,689 ~32:01/12/2020

2023/05183 ~ Complete ~54:VIBRATING SCREEN CONTROL ARRANGEMENTS ~71:SCHENCK PROCESS AUSTRALIA PTY LIMITED, 65 Epping Road, New South Wales 2113, Australia ~72: MILEWICZ, Mariusz;TEYHAN, Douglas Robert;WOODWARD, Jack~ 33:AU ~31:2020903764 ~32:16/10/2020

2023/05151 ~ Complete ~54:BENZOAZEPINE ANALOGS AS INHIBITING AGENTS FOR BRUTON'S TYROSINE KINASE ~71:Biogen MA Inc., 225 Binney Street, CAMBRIDGE 02142, MA, USA, United States of America ~72: HOPKINS, Brian T.;LYSSIKATOS, Joseph P.;MA, Bin;MARX, Isaac;PATIENCE, Daniel B.;PETERSON, Matthew;PRINCE, Robin;ZHENG, Fengmei~ 33:US ~31:62/485,745 ~32:14/04/2017

2023/05161 ~ Complete ~54:DEVICE AND METHOD FOR PRODUCING CONCRETE, IN PARTICULAR HIGH EARLY STRENGTH CONCRETE ~71:SONOCRETE GMBH, Thiemstrasse 45, Germany ~72: Max JENTZSCH;Paul SCHÖTZIGK;Ricardo REMUS~ 33:DE ~31:10 2020 132 015.9 ~32:02/12/2020;33:DE ~31:10 2021 108 917.4 ~32:09/04/2021

2023/05166 ~ Complete ~54:RING-MODIFIED PROLINE SHORT PEPTIDE COMPOUND AND USE THEREOF ~71:FUJIAN AKEYLINK BIOTECHNOLOGY CO., LTD., 2F, Comprehensive Office Building, Building 1-7, Fuyuan Industrial Zone Zherong County Ningde, Fujian 355300, People's Republic of China ~72: HAIYING HE;JIAN LI;JIANCHEN ZHANG;PENG LI;SHUHUI CHEN;YAXUN YANG;ZHENG WANG~ 33:CN ~31:202110413867.X ~32:16/04/2021;33:CN ~31:202110517743.6 ~32:12/05/2021;33:CN ~31:202110637580.5 ~32:08/06/2021;33:CN ~31:202110659242.1 ~32:11/06/2021;33:CN ~31:202110879570.2 ~32:30/07/2021;33:CN ~31:202111040878.4 ~32:06/09/2021;33:CN ~31:202111088812.2 ~32:16/09/2021;33:CN ~31:202111307043.0 ~32:05/11/2021;33:CN ~31:202111343012.0 ~32:12/11/2021;33:CN ~31:202111433962.2 ~32:29/11/2021;33:CN ~31:202111567163.4 ~32:20/12/2021;33:CN ~31:202210029887.1 ~32:12/01/2022;33:CN ~31:202210170046.2 ~32:23/02/2022

2023/05178 ~ Complete ~54:AGENTS FOR TREATING DISORDERS INVOLVING RYANODINE RECEPTORS ~71:ARMGO Pharma, Inc., PMB #260, 923 Saw Mill River Road, ARDSLEY 10502, NY, USA, United States of America ~72: BELVEDERE, Sandro;YAN, Jiaming~ 33:US ~31:63/114,724 ~32:17/11/2020

2023/05188 ~ Complete ~54:IDENTIFICATION METHOD OF HETIAN JADE BASED ON MULTI-ELEMENT CONTENT STATISTICS ~71:ALASHANKOU CUSTOMS TECHNOLOGY CENTER, 58 JUNGGAR ROAD, People's Republic of China;URUMQI CUSTOMS TECHNOLOGY CENTER, 116 NANHU NORTH ROAD, People's Republic of China ~72: LV, Xinming;WU, Zhiyuan;XU, Xinzhong;YANG, Li;ZHOU, Anli~ 33:CN ~31:202310476021X ~32:27/04/2023

2023/05160 ~ Complete ~54:PROCESS FOR MANUFACTURING NON-DAIRY CHEESE, AND NON-DAIRY CHEESE ~71:ODDLYGOOD GLOBAL OY, Meijeritie 6, Finland ~72: LEHTONEN, Kaity-Marin;MÄKINEN, Outi~ 33:FI ~31:20206230 ~32:01/12/2020

. - APPLIED ON 2023/05/11 -

2023/05186 ~ Provisional ~54:ONLINE TRANSACTION PLATFORM FOR PRODUCTS ~71:GELDENHUYS, Rohan, 11 Ernst Street, Aqua Park, Tzaneen 0850, LIMPOPO, SOUTH AFRICA, South Africa ~72: GELDENHUYS, Rohan~

2023/05214 ~ Complete ~54:METHOD FOR PREPARING L-GLUFOSINATE ~71:GUANGAN LIER CHEMICAL CO., LTD., Xinqiao Industrial Park, Guangan Economic and Technological Development Zone, Guangan, Sichuan, 638000, People's Republic of China;LIER CHEMICAL CO., LTD., No. 327, South of Mianzhou Avenue, Mianyang Economic and Technological Development Zone, Mianyang, Sichuan, 621000, People's Republic of China ~72: JIE CAI;KE CHENG;LEI ZHOU;MIN XU;TINGYING LIU;WEI ZENG;YINGSUI YIN;YONGJIANG LIU~ 33:CN ~31:202011093594.7 ~32:14/10/2020

2023/05218 ~ Complete ~54:APPARATUS, METHOD AND SYSTEM FOR ADJUSTING VOLTAGE STABILIZATION OUTPUT OF POWER SOURCE ~71:CHANGCHUN JETTY AUTOMOTIVE TECHNOLOGY CO., LTD., No. 957, Shunda Road, High-tech Development Zone, Chaoyang District Changchun, Jilin 130000, People's Republic of China ~72: CHAO WANG~ 33:CN ~31:202011286849.1 ~32:17/11/2020

2023/05226 ~ Complete ~54:HEART VALVE REPAIR DEVICES AND DELIVERY DEVICES THEREFOR ~71:Edwards Lifesciences Corporation, One Edwards Way, IRVINE 92614, CA, USA, United States of America ~72: BLACK, Mindy Lee Ann;DIXON, Eric Robert;ELTAL, Munir Hicham;FORD, Steven M.;FOREMAN, Rachel Liat David;FRANKLIN, Michael D.;FRESCHAUF, Lauren R.;GALON, Aviv;GOHRES, Rachel Ann;HOFFER, Eran;METCHIK, Asher L.;MONTOYA, Daniel James;OBA, Travis Zenyo;OBERWISE, Eric Michael;OKOS, Chris J.;POPP, Michael J.;STEARNS, Grant Matthew~ 33:US ~31:63/130,364 ~32:23/12/2020;33:US ~31:63/215,977 ~32:28/06/2021

2023/05228 ~ Complete ~54:ENHANCED SKIN PERMEATION OF A NOVEL PEPTIDE VIA STRUCTURAL MODIFICATION, CHEMICAL ENHANCEMENT, AND MICRONEEDLES ~71:Escape Therapeutics, Inc., 3800 Geer Road Suite 200, Turlock, CA, 95382-1146, United States of America ~72: Basil M. Hantash~ 33:US ~31:63/094,242 ~32:20/10/2020

2023/05215 ~ Complete ~54:TETRAHYDROQUINOLINE DERIVATIVE AND MEDICINAL USE THEREOF ~71:TORAY INDUSTRIES, INC., 1-1, Nihonbashi-Muromachi 2-chome, Chuo-ku, Tokyo, 1038666, Japan ~72: HIROYUKI MEGURO;KEN NUNETTSU ASABA;KOZUE TAKAGAKI;MARINA NOGAMI;MASASHI YAMAMOTO;NAOYA UKEGAWA;RIICHIRO TSUJI;TAKEHIRO TAKAHASHI~ 33:JP ~31:2020-215976 ~32:25/12/2020

2023/05217 ~ Complete ~54:ANTI-TIGIT ANTIBODY, AND PHARMACEUTICAL COMPOSITION AND USE THEREOF ~71:AKESO BIOPHARMA, INC., 6 Shennong Road, Torch Development Zone Zhongshan, Guangdong, 528437, People's Republic of China ~72: BAIYONG LI;PENG ZHANG;YU XIA;ZHONGMIN WANG~ 33:CN ~31:202011153458.2 ~32:26/10/2020

2023/05219 ~ Complete ~54:ELECTRONIC DEVICE COMPRISING MICROPHONE MODULE ~71:SAMSUNG ELECTRONICS CO., LTD., 129, Samsung-ro, Yeongtong-gu, Suwon-si, Gyeonggi-do, 16677, Republic of Korea ~72: DONGJU YEON;HANBOM PARK;HEEJUN RYU;HEESEOK JUNG;MYEONGJIN KIM;SUNGHYUP LEE;SUNGKEUN KOO~ 33:KR ~31:10-2021-0003575 ~32:11/01/2021

2023/05227 ~ Complete ~54:AN APPARATUS FOR TRIMMING AND CUTTING FOOD ITEMS ~71:Lambhúsasund ehf., Bakkatuni 26, AKRANES IS-300, ICELAND, Iceland ~72: ARNASON, Ingolfur~ 33:IS ~31:050330 ~32:11/12/2020

2023/05311 ~ Complete ~54:CHARACTERISATION OF A BED OF METAL POWDER BY COLORIMETRY ~71:Commissariat à l'Energie Atomique et aux Energies Alternatives, 25 rue Leblanc, Bat Le Ponant, PARIS 75015, FRANCE, France ~72: DELACROIX, Timothée;GARANDET, Jean-Paul;MASKROT, Hicham;SCHUSTER, Frédéric~ 33:FR ~31:2204524 ~32:12/05/2022

2023/05212 ~ Complete ~54:CONTINUOUS LACTOSE HYDROLYSIS IN MILK AND OTHER DAIRY PRODUCTS ~71:FAIRLIFE, LLC, 1001 West Adams Street, Chicago, IL, United States of America ~72: DOELMAN, Timothy, Peter;DRAPALA, Kamil Piotr;UR REHMAN, Shakeel~ 33:US ~31:63/112,688 ~32:12/11/2020

2023/05220 ~ Complete ~54:RECOMBINANT MICROORGANISMS AND USES THEREFOR ~71:LANZATECH, INC., 8045 Lamon Avenue, Suite 400, Skokie, Illinois, 60077, United States of America ~72: MICHAEL KOEPKE;SHIVANI GARG~ 33:US ~31:63/158,336 ~32:08/03/2021

2023/05213 ~ Complete ~54:COMPOUNDS AND METHODS FOR MODULATING ANGIOTENSINOGEN EXPRESSION ~71:IONIS PHARMACEUTICALS, INC., 2855 Gazelle Court, Carlsbad, United States of America ~72: FREIER, Susan, M.;MULLICK, Adam~ 33:US ~31:63/115,499 ~32:18/11/2020;33:US ~31:63/232,109 ~32:11/08/2021

2023/05221 ~ Complete ~54:TUMOR-SPECIFIC CLAUDIN 18.2 ANTIBODY-DRUG CONJUGATES ~71:SOTIO BIOTECH A.S., Jankovcova 1518/2, Czech Republic ~72: Iva VALENTOVA;Lenka KYRYCH SADILKOVA;Lorenz WALDMEIER;Lukas BAMMERT;Roger BEERLI;Simona HOSKOVA;Ulrich MOEBIUS~ 33:EP ~31:20 216 800.1 ~32:23/12/2020

2023/05225 ~ Complete ~54:A PROCESS TOWARD THE MANUFACTURE OF (6R,10S)-10-{4-[5-CHLORO-2-(4-CHLORO-1H-1,2,3-TRIAZOL-1-YL)PHENYL]-6-OXO-1(6H)-PYRIMIDINYL}-1-(DIFLUOROMETHYL)-6-METHYL-1,4,7,8,9,10-HEXAHYDRO-11,15-(METHENO)PYRAZOLO[4,3-B] [1,7]DIAZACYCLOTETRADECIN-5(6H)-ONE ~71:Bristol-Myers Squibb Company, Route 206 and Province Line Road, PRINCETON 08543, NJ, USA, United States of America;Janssen Pharmaceutica NV, Turnhoutseweg 30, Beerse, 2340, BELGIUM, Belgium ~72: BEN HAÏM, Cyril;BROGGINI, Diego Fernando Domenico;CAO, Duy Chi Trung;CHERNICHENKO, Kostiantyn;CUNIERE, Nicolas;EASTGATE, Martin D.;GALLAGHER, William P.;JAMISON, Christopher Robert;JUSSEAU, Xavier Jean-Marie;KOLOTUCHIN, Sergei;KOSCHKER, Philipp;LEMAIRE, Sébastien François Emmanuel;LUO, Helen Y.;MATCHA, Kiran;MOWER, Matthew Penfield;MUKHERJEE, Subha;ORTIZ, Adrian;PEREGO, Luca Alessandro;RAHMANI, Ramdane;REUTER, Karl;SCHMALZBAUER, Björn;SFOUGGATAKIS, Chris;SINGH, Amarjit;SKLIAR, Dimitri;TRAN, Ngoc Duc;WAGSCHAL, Simon Albert;WEI, Carolyn S.;WISNIEWSKI, Steven R.;XIOURAS, Christos;ZHDANKO, Alexander;ZHENG, Bin~ 33:US ~31:63/090,558 ~32:12/10/2020

2023/05223 ~ Complete ~54:WOUND IRON CORE, METHOD FOR MANUFACTURING WOUND IRON CORE, AND WOUND IRON CORE MANUFACTURING DEVICE ~71:NIPPON STEEL CORPORATION, 6-1, Marunouchi 2-chome, Chiyoda-ku, TOKYO 1008071, JAPAN, Japan ~72: MIZOKAMI, Masato;MIZUMURA, Takahito;MOGI, Hisashi;TAKAHASHI , Masaru~ 33:JP ~31:2020-178565 ~32:26/10/2020

2023/05184 ~ Provisional ~54:NON-RETURN VALVE ~71:COMEC INDUSTRIES (PTY) LTD, 43 10th Street, Voorspoed, South Africa ~72: MORETTI, Gian Mauro~

2023/05185 ~ Provisional ~54:APPARATUS AND METHOD FOR PACKING ARTICLES ~71:MED AND AUTOMATION PROPRIETARY LIMITED, 28-30 Donkervliet Street, Paarl 7620, SOUTH AFRICA, South Africa ~72: VISAGIE, Gerhardus Johannes~

2023/05207 ~ Complete ~54:CASTING METHOD AND ASSOCIATED DEVICE ~71:ARCELORMITTAL, 24-26, Boulevard d'Avranches, Luxembourg ~72: Daeyoung Stephen CHUNG;Jackie LEUNG;Joydeep SENGUPTA;Tim RAYNER~

2023/05187 ~ Provisional ~54:WATER ENHANCING COMPOSITION FOR LIVESTOCK ~71:NEW-T (PTY) LTD., 15 Squirrel Close, Welgevonden, STELLENBOSCH 7600, Western Cape, SOUTH AFRICA, South Africa ~72: BREDELL, Samuel Waldhar;DE WAAL, Ryan;HARRIS, Brett Earnest;KOOIKER, Bouke Johannes~

2023/05203 ~ Complete ~54:DISASSEMBLY AND ASSEMBLY DEVICE ASSISTED BY A WATER TURBINE ~71:HUANENG XINJIANG TUOSHI GANHE YAMANSU HYDROPOWER BRANCH, No. 008, Group 2, Yuke Aman Su (1) Village, Aksu District, Xinjiang, People's Republic of China ~72: CHEN, Yongjun;HUA, Rongjun;LIN, Wei;XIN, Yongfeng;YANG, Xuanyin~ 33:CN ~31:202221320492.9 ~32:30/05/2022

2023/05208 ~ Complete ~54:SELF MINING MACHINE SYSTEM WITH AUTOMATED CAMERA CONTROL FOR OBSTACLE TRACKING ~71:JOY GLOBAL SURFACE MINING INC., 401 E. Greenfield Avenue, United States of America ~72: MALEGAM, Keshad, D.;TAYLOR, Wesley, P.~ 33:US ~31:63/109,153 ~32:03/11/2020

2023/05191 ~ Complete ~54:MULTIFUNCTIONAL COMPREHENSIVE CULTIVATION BOX FOR BREEDING HIGH-QUALITY FORAGE GRASS AND USING METHOD THEREOF ~71:Grassland Research Institute of Xinjiang Academy of Animal Science, No.468 Alishan Street, Urumqi Economic and Technological Development Zone, Xinjiang, People's Republic of China ~72: KEYUMU Maimaiti;LI Xuesen;LIANG Weiwei;MANLIKE Asiya;NIU Jiangrong;REXITAN Ayiding;ZHANG Huihui;ZHANG Xuezhou;ZHU Hao~ 33:CN ~31:2022106604902 ~32:13/06/2022

2023/05194 ~ Complete ~54:POSITIVE PRESSURE BREATHING CIRCUIT ~71:FISHER & PAYKEL HEALTHCARE LIMITED, 15 Maurice Paykel Place, East Tamaki, Auckland, 2013, New Zealand ~72: DAVID JOHN LOVE~ 33:ZA ~31:2020/04960 ~32:12/08/2020

2023/05196 ~ Complete ~54:COUNTERWEIGHT ~71:DOORS GALORE (PTY) LTD, 655 Old Main Pretoria Road, Wynberg, South Africa ~72: DOS SANTOS, Ricky~ 33:ZA ~31:2022/09304 ~32:19/08/2022

2023/05198 ~ Complete ~54:FACE RECOGNITION SYSTEM BASED ON THREE-DIMENSIONAL RECONSTRUCTION ~71:KDCHANGE TECHNOLOGY CO., LTD., 802, Building A1, China Sound Valley, 3333 Xiyou Road, High-tech Zone, Hefei City, Anhui Province, 230088, People's Republic of China ~72: DU, Zhuang;QIAN, Jing;WEI, Yutao~

2023/05201 ~ Complete ~54:EFFICIENT SELF-COOLED OIL-IMMERSED POWER TRANSFORMER COOLING STRUCTURE ~71:AKTAO COUNTY HUANENG NEW ENERGY CO., LTD, No. 210, Group 8, Aoyitake Village, Aoyitake Town, Aktao County, Kizilsu Kirghiz Autonomous Prefecture, Xinjiang, People's Republic of China ~72: CUI, Yingying;FEI, Hongwei;LI, Shitao;WANG, Yanshuang;ZHAO, Qi~ 33:CN ~31:202221982914.9 ~32:29/07/2022

2023/05216 ~ Complete ~54:NOVEL TRYPANOSOMAL VACCINE ~71:GENOME RESEARCH LIMITED, Wellcome Trust Genome Campus, Hinxton, Cambridge, CB10 1SA, United Kingdom ~72: DELPHINE AUTHEMAN;GAVIN WRIGHT~ 33:GB ~31:2016270.7 ~32:14/10/2020

2023/05224 ~ Complete ~54:WOUND CORE ~71:NIPPON STEEL CORPORATION, 6-1, Marunouchi 2-chome, Chiyoda-ku, TOKYO 100-8071, JAPAN, Japan ~72: MIZUMURA, Takahito~ 33:JP ~31:2020-179267 ~32:26/10/2020

2023/05189 ~ Complete ~54:DIGITALIZED NITROUS OXIDE GAS DETECTION SYSTEM ~71:ANQING NORMAL UNIVERSITY, No. 1318, Jixian North Road, Anqing City, Anhui Province, 246133, People's Republic of China ~72: BAI, Jin;LI, Jing;LU, Sifan;PAN, Xueping;SUN, Chunyan;SUN, Jiancheng;WANG, Guishi;XU, Ruoyu;ZHANG, Qilei~ 33:CN ~31:2023100618821 ~32:20/01/2023

2023/05204 ~ Complete ~54:MONO-PRESSURE PLANT FOR THE PRODUCTION OF NITRIC ACID AND METHOD FOR OPERATING SAME ~71:YARA INTERNATIONAL ASA, Drammensveien 131 0277, Norway ~72: ØIEN, Halvor;DE SMET, Andre;FAUCONNIER, Peter;RÖSLER, Ronald;VIGELAND, Bent~ 33:EP ~31:20215134.6 ~32:17/12/2020

2023/05199 ~ Complete ~54:FACE RECOGNITION METHOD AND SYSTEM BASED ON SINGLE FACE PICTURE ~71:KDCHANGE TECHNOLOGY CO., LTD., 802, Building A1, China Sound Valley, 3333 Xiyou Road, High-tech Zone, Hefei City, Anhui Province, 230088, People's Republic of China ~72: DU, Zhuang;QIAN, Jing;WEI, Yutao~

2023/05202 ~ Complete ~54:A SEWAGE PURIFICATION METHOD BASED ON FREEZING-MICROWAVE ~71:NORTHWEST A&F UNIVERSITY, 22 Xinong Road, Yangling, Shaanxi Province, 712100, People's Republic of China ~72: CHEN, Junying;HU, Yaxian;LI, Xianwen;WU, Lei;YAN, Baowen~

2023/05205 ~ Complete ~54:SYSTEMS AND METHODS FOR IMPROVED MATERIAL SAMPLE ANALYSIS AND QUALITY CONTROL ~71:DECISION TREE, LLC, 2702 23rd Street, United States of America;LONGYEAR TM, INC., 2455 South 3600 West, United States of America ~72: DRAKE, Brandon Lee Goodchild;ZAWADZKI, Ry Nathaniel~ 33:US ~31:63/112,518 ~32:11/11/2020

2023/05190 ~ Complete ~54:WASTE COTTON AND STRAW FIBER MIXED MULCH FILM AND ITS PREPARATION METHOD ~71:Lingnan Normal University, No.29 Cunjin Road, Chikan District, Zhanjiang City, Guangdong Province, 524048, People's Republic of China ~72: Xianglan MING~

2023/05206 ~ Complete ~54:ENHANCED HYDROGEN RECOVERY UTILIZING GAS SEPARATION MEMBRANES INTEGRATED WITH PRESSURE SWING ADSORPTION UNIT AND/OR CRYOGENIC SEPARATION SYSTEM ~71:LUMMUS TECHNOLOGY LLC, 5825 North Sam Houston Parkway West, Suite 600, United States of America ~72: MALONEY, Dennis;PANDITRAO, Sunil;TEWARI, Shekhar;VENNER, Ronald M.~ 33:US ~31:63/135,432 ~32:08/01/2021

2023/05211 ~ Complete ~54:ANTICANCER COMPOUNDS SELECTIVE FOR ER-POSITIVE CANCERS ~71:THE BOARD OF TRUSTEES OF THE UNIVERSITY OF ILLINOIS, 352 Henry Administration Building, 506 S. Wright St., Urbana, Illinois, 61801, United States of America ~72: BOUDREAU, Matthew;HERGENROTHER, Paul, J.~ 33:US ~31:63/104,933 ~32:23/10/2020

2023/05195 ~ Complete ~54:RADIOIMMUNOCONJUGATES AND CHECKPOINT INHIBITOR COMBINATION THERAPY ~71:FUSION PHARMACEUTICALS INC., 270 Longwood Road South, Hamilton, Ontario, L8P 0A6, Canada ~72: ERIC STEVEN BURAK;JOHN FITZMAURICE VALLIANT;JULIE METCALF;MEIDUO HU;NATALIE GRINSHTEIN~ 33:US ~31:62/774,847 ~32:03/12/2018

2023/05197 ~ Complete ~54:COMPOUND PRESERVATIVE COMPOSITION BASED ON L-AMINO ACID GLYCAN, PREPARATION METHOD THEREFOR AND USE THEREOF ~71:SUIHUA LANYUAN BIOLOGICAL ENGINEERING CO., LTD., A1-02 Auto Parts City, Baoshan Road, Economic Development Zone, Beilin District, Suihua, Heilongjiang Province, 152015, People's Republic of China ~72: WANG, Xinli~ 33:CN ~31:2022105473773 ~32:18/05/2022

2023/05200 ~ Complete ~54:METHODS FOR CONVERTING OPENING DATA DURING SAP SYSTEM UPGRADE ~71:COSCO SHIPPING TECHNOLOGY (BEIJING) CO., LTD., Room 15A, Block F, Fuhua Building, No. 8 Chaoyangmen North Street, Dongcheng District, Beijing, People's Republic of China ~72: HAN, Changshan;LIANG, Jun;WANG, Li;ZHANG, Lixin~ 33:CN ~31:202310385480.7 ~32:12/04/2023

2023/05209 ~ Complete ~54:FUEL CELL ASSEMBLY ~71:POWERCELL SWEDEN AB, Ruskvädersgatan 12, Sweden ~72: HOLMBERG, Mattias~ 33:SE ~31:2051498-0 ~32:18/12/2020

2023/05193 ~ Complete ~54:PROCESSES FOR THE PREPARATION OF PYRIMIDINYLCYCLOPENTANE COMPOUNDS ~71:F. HOFFMANN-LA ROCHE AG, Grenzacherstrasse 124, CH-4070, Basel, Switzerland;GENENTECH, INC., 1 DNA Way, South San Francisco, California, 94080-4990, United States of America ~72: FRANCIS GOSSELIN;HANS IDING;MICHELANGELO SCALONE;REINHARD REENTS~ 33:EP ~31:13193030.7 ~32:15/11/2013

2023/05210 ~ Complete ~54:CARTRIDGE COMPRISING A PLURALITY OF ANALYSIS CHAMBERS FOR RECEIVING A BIOLOGICAL LIQUID ~71:MAGIA DIAGNOSTICS, 15 RUE DU MARÉCHAL LECLERC,

ECHIROLLES 38130, FRANCE, France ~72: DELSHADI, Sarah;FRATZL, Mario;KAUFFMANN, Paul~ 33:FR ~31:FR2011788 ~32:17/11/2020

2023/05222 ~ Complete ~54:A RAPAMYCIN COMPOSITION ~71:AFT PHARMACEUTICALS LIMITED, Level 1, Nielsen Centre, 129 Hurstmere Road, New Zealand ~72: ATKINSON, Hartley~ 33:AU ~31:2020277132 ~32:24/11/2020

2023/05192 ~ Complete ~54:MEASURING DEVICE FOR MEASURING CHANGE OF UNDERGROUND WATER LEVEL AMONG WATER RESOURCE OPTIMAL CONFIGURATION ~71:Jiangsu Vocational Institute of Architectural Technology, No. 26, Xueyuan Road, Tongshan New District, Xuzhou City, Jiangsu Province, 221000, People's Republic of China ~72: DANG Jianmin;GUO Chongsong;JIAN Chuanqi;JIN Lei;LI Ruoyu;LIU Liaoyuan;LIU Tianfei;SHAN Shiduo;TIAN Guohua;WU Zhaoli;YANG Dong;ZHANG Chao;ZHANG Jin;ZHU Yuancai~ 33:CN ~31:2023101049480 ~32:13/02/2023

. - APPLIED ON 2023/05/12 -

2023/05254 ~ Complete ~54:COMPOSITION AND METHOD FOR TREATING CANCER USING A VACCINE AS A FIRST THERAPUEUTIC ACTIVE INGREDIENT IN COMBINATION WITH A SECOND ACTIVE INGREDIENT ~71:HPVVAX, LLC, 140 SW Chamber Court Suite 200, Port St. Lucie, Florida, 34986, United States of America ~72: EVANGELOS V BADIAVAS;TIM IOANNIDES~ 33:US ~31:17/068,087 ~32:12/10/2020

2023/05263 ~ Complete ~54:CONNECTED DIAGNOSTIC SYSTEM AND METHOD ~71:Wi-Tronix, LLC, 631 E. Boughton Road, #240, BOLINGBROOK 60440, IL, USA, United States of America ~72: ABBAS, Syed Oun;HAMSMITH, Matthew D.;JORDAN, Lawrence B.;MATTA, Lisa A.;VEERANNA GOWDA, Chaitanya Rani~ 33:US ~31:63/110,628 ~32:06/11/2020;33:US ~31:17/518,868 ~32:04/11/2021

2023/05266 ~ Complete ~54:PLASMA GENERATING APPARATUS ~71:CHOI, Peter, 3 Rue de la Vauve, France ~72: CHOI, Peter~ 33:FR ~31:FR2010519 ~32:14/10/2020

2023/05231 ~ Provisional ~54:RESERVOIR VORTEX OVERFLOW ~71:SWANEPOEL, MICHIEL ADRIAAN, 15 FIFTH AVENUE, South Africa ~72: SWANEPOEL, MICHIEL ADRIAAN~

2023/05241 ~ Complete ~54:LIQUID NICOTINE FORMULATION AND CARTRIDGE FOR AN AEROSOL-GENERATING SYSTEM ~71:PHILIP MORRIS PRODUCTS S.A., Quai Jeanrenaud 3, Switzerland ~72: FASCIANI, Chiara;FRAUENDORFER, Felix~ 33:EP ~31:20202428.7 ~32:16/10/2020

2023/05243 ~ Complete ~54:5'-O-PHENYLACETYLURIDINE AND THERAPEUTIC USE ~71:WELLSTAT THERAPEUTICS CORPORATION, 14200 Shady Grove Road, Suite 600, United States of America ~72: GARCIA GARCIA, Rolando Alejandro;SAYDOFF, Joel A;SIMPSON, David Michael;VON BORSTEL, Reid Warren~ 33:US ~31:63/119,764 ~32:01/12/2020

2023/05245 ~ Complete ~54:LOW DENSITY COLD ROLLED AND ANNEALED STEEL SHEET, METHOD OF PRODUCTION THEREOF AND USE OF SUCH STEEL TO PRODUCE VEHICLE PARTS ~71:ARCELORMITTAL, 24-26, Boulevard d'Avranches, Luxembourg ~72: Pascal LORENZINI;Xavier GARAT~

2023/05255 ~ Complete ~54:HYBRID ELECTRICAL POWER GENERATION SYSTEM AND METHOD OF SIMULATING THE SAME ~71:VAST SOLAR PTY LTD, 226 Liverpool St, Darlinghurst, New South Wales, 2010, Australia ~72: BRIAN WILLIAM MENZIES;LUKE ALEXANDER ARTHUR HARDIMAN~ 33:AU ~31:2020903758 ~32:16/10/2020

2023/05234 ~ Complete ~54:NOVEL COMPOSITE METAMATERIAL CAPABLE OF REALIZING POSITIVE-NEGATIVE CONVERSION OF POISSON'S RATIO AND DESIGN METHOD THEREOF ~71:Taishan University, 525 Dongyue Street, Daiyue District, Tai 'an City, Shandong Province, People's Republic of China ~72: SHI Zengqin;WANG Qing;ZHANG Rui~ 33:CN ~31:202210688467.4 ~32:16/06/2022

2023/05238 ~ Complete ~54:AN ORAL MICROEMULSION-BASED FORMULATION FOR THE DELIVERY OF CABAZITAXEL AND PIPERINE AND USES THEREOF ~71:DR. JITENDRA SINGH RAJAWAT, DEPARTMENT OF PHARMACEUTICS, BHUPAL NOBLES' COLLEGE OF PHARMACY, FACULTY OF PHARMACY, BHUPAL NOBLES' UNIVERSITY, UDAIPUR, RAJASTHAN, UDAIPUR, India;DR. KAMBLE RAVINDRA KESHAVRAO, DEPARTMENT OF PHARMACEUTICS, BHUPAL NOBLES' COLLEGE OF PHARMACY, FACULTY OF PHARMACY, BHUPAL NOBLES' UNIVERSITY, UDAIPUR, RAJASTHAN, UDAIPUR, India;DR. RAJENDRA PAL SINGH RATHORE, DEPARTMENT OF PHARMACEUTICS, BHUPAL NOBLES' INSTITUTE OF PHARMACEUTICAL SCIENCES, FACULTY OF PHARMACY, BHUPAL NOBLES' UNIVERSITY, UDAIPUR, RAJASTHAN, UDAIPUR, India;REHAN UDDIN, RESEARCH SCHOLAR, DEPARTMENT OF PHARMACEUTICS, FACULTY OF PHARMACY, BHUPAL NOBLES' UNIVERSITY UDAIPUR, RAJASTHAN, UDAIPUR, India ~72: DR. JITENDRA SINGH RAJAWAT;DR. KAMBLE RAVINDRA KESHAVRAO;DR. RAJENDRA PAL SINGH RATHORE;REHAN UDDIN~ 33:IN ~31:202211066130 ~32:18/11/2022

2023/05259 ~ Complete ~54:AROMATIC BORON-CONTAINING COMPOUNDS AND INSULIN ANALOGS ~71:Protomer Technologies Inc., Lilly Corporate Center, INDIANAPOLIS 46285, IN, USA, United States of America ~72: CHEN, Diao;LIANG, JingXin;MAHDAVI, Alborz;MALI, Sachitanand;SHAKER, Mirna Ekram Anwar;SPENCER, Ryan Kelly;STEELE, Jack Joseph~ 33:US ~31:63/116,050 ~32:19/11/2020;33:US ~31:63/122,338 ~32:07/12/2020;33:US ~31:63/210,968 ~32:15/06/2021;33:US ~31:63/249,868 ~32:29/09/2021

2023/05265 ~ Complete ~54:METHOD FOR TESTING TARGET NUCLEIC ACID IN SAMPLE ~71:BEIJING SYNSORBIO TECHNOLOGY CO., LTD., Room 601, 6th Floor, Building 8, Yard 18, Kechuang 13th Street, Beijing Economic And Technological Development Zone, People's Republic of China;BEIJING SYNSORTECH CO., LTD., Room 603, 6th Floor, Building 8, Yard 18, Kechuang 13th Street, Beijing Economic And Technological Development Zone, People's Republic of China;ZHEJIANG SYNSORBIO TECHNOLOGY CO., LTD., Room 211-3, Building 1, 21 Haitian Road, Binhai New Area, Shaoxing City, People's Republic of China ~72: CHEN, Chongjian;CHENG, Xuejia;PAN, Weiye;PENG, Qiongfang;SUN, Yang;ZHANG, Zhuo~ 33:CN ~31:202011278709.X ~32:16/11/2020

2023/05267 ~ Complete ~54:APPARATRUS FOR DECONTAMINATING AMBIENT AIR IN AN INDOOR ENVIRONMENT ~71:GAMMA PULSE SAS, 9 Rue Alexander Fleming, France ~72: CHOI, Peter~ 33:FR ~31:FR2010524 ~32:14/10/2020

2023/05246 ~ Complete ~54:CHEMICAL MODIFICATIONS FOR INHIBITING EXPRESSION OF ALDH2 ~71:DICERNA PHARMACEUTICALS, INC, 75 Hayden Avenue, Lexington, United States of America ~72: BROWN, Bob Dale;DUDEK, Henryk T;SAXENA, Utsav~ 33:US ~31:63/113,689 ~32:13/11/2020

2023/05252 ~ Complete ~54:BIPHASIC SUBCUTANEOUS DOSING REGIMENS FOR ANTI-VLA-4 ANTIBODIES ~71:BIOGEN MA INC., 225, Binney Street, Cambridge, Massachusetts, 02142, United States of America ~72: HIMANSHU NAIK;NOLAN CAMPBELL;YUAN ZHAO~ 33:US ~31:63/113,864 ~32:14/11/2020;33:US ~31:63/142,968 ~32:28/01/2021

2023/05256 ~ Complete ~54:METHOD TO ROAST COFFEE BEANS ~71:Société des Produits Nestlé S.A., Avenue Nestlé 55, VEVEY 1800, SWITZERLAND, Switzerland ~72: BAEKELANDT,

Maxime;CELIS, Michiel Alexander;DEGREEF, Thomas Rudi S.;DUBIEF, Flavien Florent;LEMMENS, Rien Denise M.;MOREND, Joël~ 33:EP ~31:20202829.6 ~32:20/10/2020

2023/05262 ~ Complete ~54:WATER-SOLUBLE UNIT DOSE ARTICLE ~71:The Procter & Gamble Company, One Procter & Gamble Plaza, CINCINNATI 45202, OH, USA, United States of America ~72: COURCHAY, Florence Catherine;FRIEDICH, Steven G.;LABEQUE, Regine;LI, Shigeng;VITIELLO, Luca~ 33:EP ~31:20214392.1 ~32:15/12/2020

2023/05244 ~ Complete ~54:UNBIASED AND HIGH-THROUGHPUT IDENTIFICATION AND QUANTIFICATION OF HOST CELL PROTEIN IMPURITIES BY AUTOMATED ITERATIVE LC-MS/MS (HCP-AIMS) FOR THERAPEUTIC PROTEIN DEVELOPMENT ~71:REGENERON PHARMACEUTICALS, INC., 777 Old Saw Mill River Road, Tarrytown, United States of America ~72: HU, Mengqi;HUANG, Yu;QIU, Haibo~ 33:US ~31:63/114,746 ~32:17/11/2020

2023/05250 ~ Complete ~54:PROCESSES AND METHODS FOR PRODUCTION OF CRYSTALLIZED METAL SULFATES ~71:HATCH LTD., 2800 Speakman Drive, Mississauga, Ontario, L5K 2R7, Canada ~72: ANDREA WINYEN TRAC;LOUIZA KAHINA HARKOUK;ROBERT JOHN FRASER~ 33:US ~31:63/112,891 ~32:12/11/2020

2023/05229 ~ Provisional ~54:BAGGING APPARATUS AND METHOD ~71:MED AND AUTOMATION PROPRIETARY LIMITED, 28-30 Donkervliet Street, Paarl 7620, SOUTH AFRICA, South Africa ~72: VISAGIE, Gerhardus Johannes~

2023/05235 ~ Complete ~54:EASY-TO-DEMOULD CONCRETE TEST MOLD WITH SUPER-HYDROPHOBIC/SUPER-SLIPPERY INNER WALL AND PREPARATION METHOD THEREOF ~71:Taishan University, 525 Dongyue Street, Daiyue District, Tai 'an City, Shandong Province, People's Republic of China ~72: WANG Qing;XU Shuangshuang;ZHANG Rui~ 33:CN ~31:202211273362.9 ~32:18/10/2022

2023/05240 ~ Complete ~54:COLD ROLLED AND HEAT TREATED STEEL SHEET AND A METHOD OF MANUFACTURING THEREOF ~71:ARCELORMITTAL, 24-26, Boulevard d'Avranches, Luxembourg ~72: Artem ARLAZAROV;Jean-Marc PIPARD~

2023/05247 ~ Complete ~54:POLYMORPHS OF AN FXR AGONIST ~71:ELI LILLY AND COMPANY, Lilly Corporate Center, Indianapolis, Indiana, 46285, United States of America ~72: PAUL K OWENS;STEPHANIE ANN SWEETANA;STEVEN JERALD SPROULL~ 33:US ~31:63/092,423 ~32:15/10/2020

2023/05242 ~ Complete ~54:FLOW CYTOMETRY ATTENUATED REPORTER EXPRESSION (FLARE) MULTIPLE REPORTER SYSTEM AND METHODS OF USE THEREOF ~71:GENZYME CORPORATION, 450 Water Street, Cambridge, Massachusetts, United States of America ~72: CAIRNS, Victor R;RECZEK, David;VITKO, Jason~ 33:US ~31:63/116,094 ~32:19/11/2020

2023/05264 ~ Complete ~54:WIRELESS ONBOARD RAILROAD BEARING CONDITION MONITORING SYSTEM ~71:Hum Industrial Technology, Inc., 911 Washington Ave., Suite 601, ST. LOUIS 63101, MO, USA, United States of America;The Board of Regents of the University of Texas System, 210 West 7th Street, AUSTIN 78701, TX, USA, United States of America ~72: CUANANG, Jonas;FOLTZ, Heinrich;MONTALVO, Joseph;PORTER, Byron;TARAWNEH, Constantine;WILSON, Brent~ 33:US ~31:17/097,831 ~32:13/11/2020

2023/05258 ~ Complete ~54:ANTIBODIES AGAINST INFLUENZA A VIRUSES ~71:Humabs BioMed SA, Via dei Gaggini 3, BELLINZONA 6500, SWITZERLAND, Switzerland;Vir Biotechnology, Inc., 499 Illinois Street, Suite 500, SAN FRANCISCO 94158, CA, USA, United States of America ~72: CAMERONI, Elisabetta;CORTI,

Davide;PIZZUTO, Matteo Samuele;SNELL, Gyorgy;ZATTA, Fabrizia~ 33:US ~31:63/117,437 ~32:23/11/2020;33:US ~31:63/123,419 ~32:09/12/2020

2023/05260 ~ Complete ~54:METHOD FOR OUTDOOR INSTALLATION OF AN ARRAY OF SOLAR CONVERTERS, AND CARRIAGE USED IN THE METHOD ~71:Comau S.p.A., via Rivalta 30, GRUGLIASCO (TORINO) I-10095, ITALY, Italy ~72: BECCARISI, Francesco;DI STEFANO, Giovanni;POLLANO, Maurizio~ 33:IT ~31:102020000028190 ~32:24/11/2020

2023/05248 ~ Complete ~54:TARGETED CONJUGATES COMPRISING MODIFIED SIRNA ~71:ARBUTUS BIOPHARMA CORPORATION, 100-8900 Glenlyon Parkway , Burnaby, British Columbia, V5J 5J8, Canada ~72: AMY C. H LEE;EMILY P THI;MICHAEL J SOFIA;OWEN M DALY~ 33:US ~31:63/110,837 ~32:06/11/2020

2023/05251 ~ Complete ~54:LUBRICATING OIL COMPOSITION WITH RENEWABLE BASE OIL, HAVING LOW SULFUR AND SULFATED ASH CONTENT AND CONTAINING MOLYBDENUM AND BORON COMPOUNDS ~71:CHEVRON U.S.A. INC., 6001 Bollinger Canyon Road, San Ramon, California, 94583, United States of America ~72: MIHIR K PATEL;WILLEM VAN DAM~ 33:US ~31:63/106,538 ~32:28/10/2020

2023/05257 ~ Complete ~54:CHLORINATING SKIMMER BASKET ~71:Innovative Water Care, LLC, 1400 Bluegrass Lakes Parkway, ALPHARETTA 30004, GA, USA, United States of America ~72: MURPHY, David~ 33:US ~31:63/092,210 ~32:15/10/2020

2023/05261 ~ Complete ~54:PROTEIN-BASED NANOPARTICLE VACCINE FOR METAPNEUMOVIRUS ~71:Icosavax, Inc., 1930 Boren Avenue, Suite 1000, SEATTLE 98101, WA, USA, United States of America ~72: FELDHAUS, Andrew Lawrence;HOLTZMAN, Douglas Andrew;WOLF, Clancey Buchanan~ 33:US ~31:63/113,686 ~32:13/11/2020

2023/05239 ~ Complete ~54:AN AERO ACOUSTIC PROCESSING APPARATUS AND PROCESS FOR PROCESSING WASTE ~71:VORTEX INDUSTRIAL SOLUTIONS LIMITED, THIRD FLOOR, 1 LE TRUCHOT, ST PETER PORT, GUERNSEY GY1 1WD, ~72: RAWSON, Colin, Bruce~ 33:ZA ~31:2020/06742 ~32:29/10/2020

2023/05249 ~ Complete ~54:TREATMENT PROCESS FOR CRYSTALLIZING A METAL SULFATE ~71:HATCH LTD., 2800 Speakman Drive, Mississauga, Ontario, L5K 2R7, Canada ~72: HENRY CHRISTIAN IMMO VON SCHROETER;MARK JOSEPH MACHADO;ROBERT JOHN FRASER~ 33:US ~31:63/109,227 ~32:03/11/2020

2023/05253 ~ Complete ~54:RADIOACTIVE COMPLEXES OF ANTI-HER2 ANTIBODY, AND RADIOPHARMACEUTICAL ~71:NIHON MEDI-PHYSICS CO., LTD., 3-4-10, Shinsuna, Koto-ku, Tokyo, 1360075, Japan ~72: GOTA TONOYA;MINORU KAWATANI;TAKAHISA HANADA;TAKUYA TAKEDA~ 33:JP ~31:2020-174840 ~32:16/10/2020;33:JP ~31:2020-215740 ~32:24/12/2020;33:JP ~31:2021-024688 ~32:18/02/2021

2023/05232 ~ Provisional ~54:ANIMAL WATERER ~71:SWANEPOEL, MICHIEL ADRIAAN, 15 FIFTH AVENUE, South Africa ~72: SWANEPOEL, MICHIEL ADRIAAN~

2023/05233 ~ Complete ~54:METHOD FOR SEPARATING AND PURIFYING TEA SAPONIN AND PROANTHOCYANIDINS FROM CAMELLIA OLEIFERA SHELLS ~71:INSTITUTE OF APPLIED CHEMISTRY, JIANGXI ACADEMY OF SCIENCES, No. 7777, Changdong Avenue, High tech Development Zone, Nanchang City, Jiangxi, 330096, People's Republic of China ~72: FU, Jianping;HAN, Xiaodan;WANG, Huibin;WU, Lei;XIONG, Wei~

2023/05236 ~ Complete ~54:PREPARATION METHOD OF BIOLOGICAL NANO ELEMENTAL SELENIUM AND ITS APPLICATION IN SOIL HEAVY METAL POLLUTION REMEDIATION ~71:Guizhou Institute of Biology, No.1

Tongyin Road, Xiaohe Economic Development Zone, Guiyang City, Guizhou Province, People's Republic of China ~72: HU Jing;HU Xuejun;JIANG Juan;LONG Yunchuan~

2023/05230 ~ Provisional ~54:SUSTAINABLE DIGESTIVE AID ~71:MPT-NNA JOINT VENTURE, 10 Surrey Manor, 101 Dennis Road, ATHOLL, Johannesburg 2196, Gauteng Province, SOUTH AFRICA, South Africa ~72: MHLANLANYEKOSI, Ndebele Godfrey~

2023/05237 ~ Complete ~54:ROOM TEMPERATURE STABLE LYOPHILIZED PROTEIN ~71:REGENERON PHARMACEUTICALS, INC., 777 Old Saw Mill River Road, Tarrytown, United States of America ~72: LUDWIG, David, Brett;TANG, Xiaolin~ 33:US ~31:62/405,610 ~32:07/10/2016

. - APPLIED ON 2023/05/15 -

2023/05271 ~ Provisional ~54:LOADING FRAME ASSEMBLY ~71:CORNELIS ZWAAN, 105 Severn Place, Clearwater Flyfishing Estate, South Africa;MATTHEW ANTHONY MULLER, 55 Protea Street, highveld Park, South Africa ~72: Cornelis Zwaan;Matthew Anthony Muller~

2023/05278 ~ Complete ~54:A DEVICE FOR PREPARING WATERBORNE ACRYLIC MODIFIED EPOXY RESIN ~71:Hunan Tuochuang Polymeric New Material Co., Ltd, Room 1803, 18/F, Block B, Innovation Center, High-tech Zone, Hengyang City, Hunan Province, People's Republic of China ~72: lei guanjun;lei yajun;liao jin;wu yongying~ 33:CN ~31:2022112931259 ~32:21/10/2022

2023/05274 ~ Complete ~54:ORE PASS WELLHEAD STOPBOARD ~71:DU LAN JINHUI MINING CO., LTD., Jinciwan, Wulonggou, Nuomuhong Township, Dulan County, Haixi Prefecture, Qinghai Province, 816100, People's Republic of China ~72: DONG, Bingzheng;GUAN, Youguo~

2023/05282 ~ Complete ~54:INTELLIGENT MONITORING SYSTEM AND METHOD FOR INDUSTRIAL AUTOMATED PRODUCTION LINE ~71:CHENGDU VOCATIONAL AND TECHNICAL COLLEGE OF INDUSTRY, No.818, Da’an Road, Zhengxing Street,Tianfu New District, Chengdu City, Sichuan Province, 610213, People's Republic of China ~72: QIAO, Jianchun~

2023/05293 ~ Complete ~54:INTEGRIN INHIBITOR AND USES THEREOF ~71:PLIANT THERAPEUTICS, INC., 260 Littlefield Avenue, South San Francisco, California, 94080, United States of America ~72: DALIAN ZHAO;GAO QI;JACOB CHA;JIAN WANG;KATERINA LEFTHERIS~ 33:US ~31:63/116,042 ~32:19/11/2020

2023/05288 ~ Complete ~54:LARGE SCALE SYNTHESIS OF MESSENGER RNA ~71:TRANSLATE BIO, INC., 200 West Street, Waltham, MA, United States of America ~72: ABYSALH, Jonathan;COOPER, Dustin;DEROSA, Frank;DIAS, Anusha;VARGAS, Jorel, E~ 33:US ~31:63/092,274 ~32:15/10/2020

2023/05297 ~ Complete ~54:GEL, OINTMENT, AND FOAM FORMULATIONS OF TAPINAROF AND METHODS OF USE ~71:DERMAVANT SCIENCES GMBH, Viaduktstrasse 8, 4051, Basel, Switzerland ~72: BILJANA ROUGHAN;BRENDAN PHILIP BRADY;DAVID SCOTT RUBENSTEIN;FLORENCIA MARIA GUIDALI BONJOUR;GLENN TABOLT;HARIPRIYA KALLURI;LAURA HELEN SUTCLIFFE;PIYUSH JAIN;REINILDA CATUBIG;RICHARD BUCHTA~ 33:US ~31:63/117,235 ~32:23/11/2020

2023/05276 ~ Complete ~54:METHOD FOR PREDICTING PAROXYSMAL IMPACT VIBRATION IN STATE OF LOCAL DEFECT OF OUTER RACE OF INTERMEDIATE BEARING ~71:SHIJIAZHUANG TIEDAO UNIVERSITY, 17 East North 2nd Ring Road, Shijiazhuang City, Hebei, 050000, People's Republic of China ~72: GAO, Tian~ 33:CN ~31:2022105652913 ~32:23/05/2022

2023/05291 ~ Complete ~54:NEEDLE SET FOR LAPAROSCOPY AND KNOTTING DEVICE HAVING NEEDLE SET ~71:MATRIXLABS MEDICAL CO., LTD., 11F-3, 490, Sec. 2, Renai Rd., Linkou Dist. New Taipei, Taiwan 244, People's Republic of China ~72: FUNG-CHAO TU;KUEI-HUA CHEN;WEN-YIH WU~

2023/05296 ~ Complete ~54:MACROCYCLES CONTAINING A 1,3,4-OXADIAZOLE RING FOR USE AS MODULATORS OF CYSTIC FIBROSIS TRANSMEMBRANE CONDUCTANCE REGULATOR ~71:VERTEX PHARMACEUTICALS INCORPORATED, 50 Northern Avenue, Boston, Massachusetts, 02210, United States of America ~72: BRETT C BOOKSER;CLAUDIO STURINO;JEREMY J CLEMENS;JINGLAN ZHOU;JULIE LATERREUR;LINO VALDEZ;MARK THOMAS MILLER;MICHEL GALLANT;MINSON BAEK;PETER DIEDERIK JAN GROOTENHUIS;PRASUNA PARASELLI;SARA SABINA HADIDA RUAH;THOMAS CLEVELAND;THUMKUNTA JAGADEESWAR REDDY;TIMOTHY COON;WILLIAM SCHULZ BECHARA;YEEMAN K RAMTOHUL~ 33:US ~31:63/115,552 ~32:18/11/2020

2023/05299 ~ Complete ~54:METHOD FOR PREPARING HIGH-NITROGEN STAINLESS STEEL BY SELECTIVE LASER MELTING OF PURE METAL OVER-MATCHED POWDER ~71:NORTH CHINA UNIVERSITY OF SCIENCE AND TECHNOLOGY, NO. 21 BOHAI AVENUE, People's Republic of China ~72: NI, Guolong;REN, Jianbiao;SUN, Xin;WANG, Shuhuan;WANG, Yachao;ZHAO, Dingguo~ 33:CN ~31:202211153022.2 ~32:21/09/2022

2023/05302 ~ Complete ~54:DRILLING TOOL LOADING CONTROL SYSTEM ~71:Caterpillar Global Mining Equipment LLC, 3501 S. FM Highway 1417, DENISON 75020, TX, USA, United States of America;Caterpillar Global Mining HMS GmbH, Caterpillarstr. 1, DORTMUND 44149, GERMANY, Germany ~72: DIEKMANN, Timo;MOBERG, Carl J.;SHAHID, Ahsan~ 33:US ~31:17/076,456 ~32:21/10/2020

2023/05305 ~ Complete ~54:HEAVY CHAIN ANTIBODIES BINDING TO FOLATE RECEPTOR ALPHA ~71:TeneoBio, Inc., One Amgen Center Drive, THOUSAND OAKS 91320, CA, USA, United States of America ~72: AVANZINO, Brian;HARRIS, Katherine;KEHM, Hannes;TRINKLEIN, Nathan~ 33:US ~31:63/115,436 ~32:18/11/2020

2023/05275 ~ Complete ~54:A QUANTUM KEY DISTRIBUTION SYSTEM FOR SATELLITE COMMUNICATION ~71:Dr. Vishal Sharma, S/O Shri Kailash Chandra Sharma, Shivam Nagar- 1, Plot 56, Ramnagariya, Jagatpura, Jaipur, Rajasthan, 302017, India ~72: Dr. Vishal Sharma~

2023/05272 ~ Provisional ~54:'NO-BURN' POT SLEEVE ~71:Martin Hempel, Endeavour Farm, South Africa ~72: Martin Hempel~

2023/05286 ~ Complete ~54:A PROCESS FOR PRODUCING ALPHA-OLEFINS ~71:SHELL INTERNATIONALE RESEARCH MAATSCHAPPIJ B.V., Carel van Bylandtlaan 30, HR The Hague, Netherlands ~72: HUH, Heejae;KOMPLIN, Glenn Charles;WARD, Gregory John~ 33:US ~31:63/125,713 ~32:15/12/2020

2023/05289 ~ Complete ~54:A PROCESS FOR PRODUCING ALPHA-OLEFINS ~71:SHELL INTERNATIONALE RESEARCH MAATSCHAPPIJ B.V., Carel van Bylandtlaan 30, HR The Hague, Netherlands ~72: BOLINGER, Cornelius Mark;NORRIS, Brent Carl;WILLIAMS, Valerie Anne~ 33:US ~31:63/125,783 ~32:15/12/2020

2023/05301 ~ Complete ~54:METHOD FOR OBTAINING NATURAL RUBBER FROM PLANT MATERIAL ~71:Continental Reifen Deutschland GmbH, Vahrenwalder Str. 9, HANNOVER 30165 , GERMANY, Germany;Fraunhofer Gesellschaft zur Förderung der angewandten Forschung e.V., Hansastraße 27 c, 80686 MÜNCHEN , GERMANY, Germany ~72: BEHM, Frank;HERZOG, Katharina;JANCZAK, Norbert;PRÜFER, Dirk;RECKER, Carla;SCHULZE GRONOVER, Christian;VENZ, Carsten~ 33:DE ~31:10 2020 214 356.0 ~32:16/11/2020

2023/05304 ~ Complete ~54:PRETARGETING IMAGING AGENTS ~71:Eli Lilly and Company, Lilly Corporate Center, INDIANAPOLIS 46285, IN, USA, United States of America ~72: CAGNOLINI, Aldo;HOYE, Adam Thomas;LI, Ximin;WRIGHT, Justin Patrick;XIONG, Hui~ 33:US ~31:63/126,100 ~32:16/12/2020;33:US ~31:63/166,484 ~32:26/03/2021

2023/05307 ~ Complete ~54:METHOD AND APPARATUS FOR TESTING A TUNNEL FIRE SUPPRESSION SYSTEM ~71:Paradigm Flow Services Limited, 5 Carden Place, ABERDEEN AB10 1UT, UNITED KINGDOM, United Kingdom ~72: MACAULAY, Angus;MACKENZIE, Hugh;THOMSON, Ashley~ 33:GB ~31:2016462.0 ~32:16/10/2020

2023/05281 ~ Complete ~54:TEMPERATURE CONTROL DEVICE FOR GOOSE ANTI-SEASON REPRODUCTION ~71:INSTITUTE OF ANIMAL HUSBANDRY, HEILONGJIANG ACADEMY OF AGRICULTURAL SCIENCES, NO. 368 XUEFU ROAD, People's Republic of China ~72: LI, Manyu;LIU, Guojun;PENG, Fugang;SUN, Jinyan;XU, Shanshan;YUE, Shan;ZHAO, Xiuhua~

2023/05284 ~ Complete ~54:INCONTINENCE ARTICLE WITH PH REGULATOR ~71:PAUL HARTMANN AG, Paul-Hartmann-Str. 12, Germany ~72: BÄHRLE, Christian;GAUSE, Enno;KESSELMEIER, Rüdiger;VECHTER, Olga~ 33:DE ~31:10 2020 134 790.1 ~32:23/12/2020

2023/05292 ~ Complete ~54:TYING STRUCTURE CAPABLE OF BEING USED FOR SUTURING ~71:MATRIXLABS MEDICAL CO., LTD., 11F-3, 490, Sec. 2, Renai Rd., Linkou Dist. New Taipei, Taiwan 244, People's Republic of China ~72: FUNG-CHAO TU;KUEI-HUA CHEN;WEN-YIH WU~

2023/05294 ~ Complete ~54:MULTIPLEXED METHOD FOR ASSESSING GLOBAL OR GENOMIC LOCUS-SPECIFIC LEVELS OF CHROMATIN MODIFICATION ~71:EPIGENICA AB, c/o United Spaces, Torsgatan 26 113 21 Stockholm, Sweden ~72: SIMON ELSÄSSER~ 33:EP ~31:20211177.9 ~32:02/12/2020

2023/05300 ~ Complete ~54:COMPOUNDS, COMPOSITIONS, AND METHODS ~71:DENALI THERAPEUTICS INC., 161 Oyster Point Blvd. South San Francisco, United States of America ~72: BAGDASARIAN, Alex L.;BUCHER, Cyril;CRAIG, II, Robert A.;DE VICENTE FIDALGO, Javier;ESTRADA, Anthony A.;FOX, Brian M.;HU, Cheng;HUFFMAN, Benjamin J.;LEXA, Katrina W.;NILEWSKI, Lizanne G.;OSIPOV, Maksim;THOTTUMKARA, Arun~ 33:US ~31:63/116,727 ~32:20/11/2020;33:US ~31:63/127,928 ~32:18/12/2020;33:US ~31:63/182,741 ~32:30/04/2021;33:US ~31:63/256,393 ~32:15/10/2021

2023/05303 ~ Complete ~54:POLYPEPTIDE CONSTRUCTS SELECTIVELY BINDING TO CLDN6 AND CD3 ~71:Amgen Inc., One Amgen Center Drive, THOUSAND OAKS 91320-1799, CA, USA, United States of America;Amgen Research (Munich) GmbH, Staffelseestrasse 2, MUNICH 81477, GERMANY, Germany ~72: ALBA, Benjamin M.;ANLAHR, Jonas;BAILIS, Julie;BLUEMEL, Claudia;DAHLHOFF, Christoph;GAEDTKE, Lars;HONER, Jonas;MURAWSKY, Christopher M.;PHAM, Elizabeth Dang;QUAGLIA, Silke;RAUM, Tobias~ 33:US ~31:63/110,817 ~32:06/11/2020;33:US ~31:63/139,419 ~32:20/01/2021

2023/05280 ~ Complete ~54:COMPOSITIONS, KITS, AND METHODS TO INDUCE ACQUIRED CYTORESISTANCE USING STRESS PROTEIN INDUCERS ~71:FRED HUTCHINSON CANCER CENTER, 1100 Fairview Avenue North, J2-302, United States of America ~72: JOHNSON, Ali CM;ZAGER, Richard~ 33:US ~31:62/057,047 ~32:29/09/2014;33:US ~31:62/212,232 ~32:31/08/2015

2023/05285 ~ Complete ~54:A PROCESS FOR PRODUCING ALPHA-OLEFINS ~71:SHELL INTERNATIONALE RESEARCH MAATSCHAPPIJ B.V., Carel van Bylandtlaan 30, HR The Hague, Netherlands ~72: BOLINGER, Cornelius Mark;NORRIS, Brent Carl;WILLIAMS, Valerie Anne~ 33:US ~31:63/125,707 ~32:15/12/2020

2023/05290 ~ Complete ~54:CARRIER AGGREGATION CONFIGURATION IN 5G WIRELESS NETWORKS ~71:NOKIA TECHNOLOGIES OY, KARAKAARI 7, 02610 ESPOO, FINLAND, Finland ~72: ALI, Amaanat;UMEDA, Hiromasa;VASENKARI, Petri, Juhani~ 33:US ~31:63/104,066 ~32:22/10/2020

2023/05298 ~ Complete ~54:HYDROGEN EMBRITTLEMENT RESISTANCE COATED STEEL ~71:ARCELORMITTAL, 24-26, Boulevard d'Avranches, Luxembourg ~72: Loretta BOCK;Md SHAMSUJJOHA~

2023/05306 ~ Complete ~54:FAB HIGH MANNOSE GLYCOFORMS ~71:F. Hoffmann-La Roche AG, Grenzacherstrasse 124, BASEL 4070, SWITZERLAND, Switzerland ~72: HOFMANN, Carsten;JOERIS, Klaus;LAU, Wilma;OEZDEN, Neslihan;RICHTER, Wolfgang;SCHMIDT, Britta;STAACK, Roland~ 33:EP ~31:20207804.4 ~32:16/11/2020

2023/05309 ~ Complete ~54:SYSTEM FOR ELECTRICALLY FEEDING AT LEAST ONE ELECTRICALLY POWERED VEHICLE ~71:Bluvein Innovation Pty Ltd., 248 Earnshaw Rd., NORTHGATE QLD 4014, AUSTRALIA, Australia ~72: OLIVER, James;ROBINSON, Caleb~ 33:IB ~31:2020/081199 ~32:05/11/2020

2023/05270 ~ Provisional ~54:AUXILIARY TRAILER ~71:ROUTE HOLDINGS (PTY) LTD, 43 George Lubbe Street, Hamilton, Bloemfontein, South Africa ~72: BURGER, Marco;KRAMER, Abraham Hermanus~

2023/05273 ~ Complete ~54:DOWNHOLE LIFTING PLATFORM TRUCK FOR METAL MINES ~71:DU LAN JINHUI MINING CO., LTD., Jinciwan, Wulonggou, Nuomuhong Township, Dulan County, Haixi Prefecture, Qinghai Province, 816100, People's Republic of China ~72: DONG, Bingzheng;GUAN, Youguo~

2023/05277 ~ Complete ~54:PRIMERS, KIT AND METHOD FOR DETECTING OF AFRICAN SWINE FEVER VIRUS ~71:army medical university, gaotanyan street no.30, shapingba district, chongqing, 400038, People's Republic of China ~72: Ding Xiaoyan;He Jiuxiang;Li Jintao;Zhou Xiaoyang;Zhou Yuxin~ 33:CN ~31:202210536550X ~32:17/05/2022

2023/05279 ~ Complete ~54:CAMERA FOCAL LENGTH ADJUSTING APPARATUS ~71:JIAXING VOCATIONAL&TECHNICAL COLLEGE, No. 547, Tongxiang Avenue, Jiaxing City, Zhejiang Province, People's Republic of China ~72: LI Chenxi;LU Chun;ZHAO Yude~ 33:CN ~31:202320927363.4 ~32:23/04/2023

2023/05283 ~ Complete ~54:CABLE LAYING DEVICE FOR ELECTRICAL AUTOMATION CONTROL ~71:Jiangsu College Of Safety Technology, Dongdianzi, East suburb of Yunlong District, Xuzhou City, Jiangsu Province, People's Republic of China ~72: Hou Chun;Li Jiajia~ 33:CN ~31:2022109138863 ~32:01/08/2022

2023/05287 ~ Complete ~54:A PROCESS FOR PRODUCING ALPHA OLEFINS ~71:SHELL INTERNATIONALE RESEARCH MAATSCHAPPIJ B.V., Carel van Bylandtlaan 30, HR The Hague, Netherlands ~72: HUH, Heejae;KOMPLIN, Glenn Charles~ 33:US ~31:63/125,728 ~32:15/12/2020

2023/05295 ~ Complete ~54:SOLID FORMS OF 4-(5-(4-FLUOROPHENYL)-6-TETRAHYDRO-2H-PYRAN-4-YL)-1,5-DIHYDROPYRROLO[2,3-F]INDAZOL-7-YL)BENZOIC ACID ~71:VERTEX PHARMACEUTICALS INCORPORATED, 50 Northern Avenue, Boston, Massachusetts, 02210, United States of America ~72: ALES MEDEK;ELISA A TORRICO GUZMAN;KAN-NIAN HU;KATHLEEN PAIGE SOKOLOWSKY;KIRK ALAN OVERHOFF;MARISA SPOSATO;MEI-HSIU LAI;RUPA SAWANT;SETU RODAY;SIMON GIROUX;SIYING LIU;YI SHI;ZHENGTIAN SONG~ 33:US ~31:63/114,742 ~32:17/11/2020

2023/05308 ~ Complete ~54:GENETICALLY ENGINEERED CELLS AND USES THEREOF ~71:Century Therapeutics, Inc., 3675 Market Street, PHILADELPHIA 19104, PA, USA, United States of America ~72: BORGES, Luis;BRASEL, Kenneth;CAMPION, Liam;CARTON, Jill;GURUNG, Buddha;JESSUP, Heidi;MORSE,

Barry;NASO, Michael;QUINN, Hillary;THOMPSON, Lucas;WALLET, Mark;WHEELER, John~ 33:US ~31:63/120,799 ~32:03/12/2020;33:US ~31:63/120,948 ~32:03/12/2020;33:US ~31:63/120,980 ~32:03/12/2020

2023/05310 ~ Complete ~54:PLATED STEEL MATERIAL ~71:NIPPON STEEL CORPORATION, 6-1, Marunouchi 2-chome, Chiyoda-ku, TOKYO 100-8071, JAPAN, Japan ~72: GOTO, Yasuto;ISHIDA , Yoshinari;ISHII , Kotaro;SAITO, Mamoru;TOKUDA , Kohei~ 33:JP ~31:2020-191503 ~32:18/11/2020

2023/05312 ~ Provisional ~54:PLINTHS,SUPPORTS AND BASES FABRICATED FROM COMPOSITE MATERIALS ~71:LEON HARMSEN, 18 TREVOR STREET, KLERKSDORP, South Africa ~72: LEON HARMSEN~

. - APPLIED ON 2023/05/16 -

2023/05398 ~ Complete ~54:DETECTOR FOR ASSEMBLY CORRECTION OF PREFABRICATED BUILDING ~71:CHINA CONSTRUCTION SECOND ENGINEERING BUREAU LTD., NO. 251, BEIYANGWA, People's Republic of China ~72: JIANG, Dejian;MOU, Junzhong;RAN, Yucheng;SHEN, Yong;ZHANG, Hu~

2023/05335 ~ Complete ~54:FINGERPRINT OF COMPOUND FEED ADDITIVE AND CONSTRUCTION METHOD THEREOF ~71:BEIJING AILV BIOSCIENTECH CO., LTD., 227A, F2, Building 8, Zhongguancun Software Park, No.8, Dongbeiwang West Road, Haidian District, Beijing, 100089, People's Republic of China;HEBEI AILV BIOENGINEERING CO., LTD., North Side of No.2 Road, East Side of Yunhe Avenue, Xianghe County Development Area, Langfang, Hebei, 065400, People's Republic of China ~72: LANGQUN YAO;LILI LIU;SUJUN DONG;WEI WANG~ 33:CN ~31:202211680032.1 ~32:27/12/2022

2023/05337 ~ Complete ~54:ALOE EXTRACTS FOR MICROBIAL NEUTRALISATION ~71:2QR RESEARCH B.V., Brassersplein 14 2612 CT, Delft, Netherlands ~72: FLORIS KOUMANS;PAUL KWAKMAN~ 33:EP ~31:20202957.5 ~32:21/10/2020

2023/05345 ~ Complete ~54:PROCESS FOR PREPARING MICROCAPSULES ~71:Syngenta Crop Protection AG, Rosentalstrasse 67, BASEL 4058, SWITZERLAND, Switzerland ~72: CHRISTIE, Annette;GELLATLY, Scott;LINDSAY, Christopher Ian~ 33:EP ~31:20213913.5 ~32:14/12/2020

2023/05319 ~ Complete ~54:A SYSTEM FOR ESTIMATING SEA ICE CONCENTRATION OF AN AREA ~71:CAP-Project, Space Applications Centre- Indian Space Research Organisation, Jodhpur Tekra, Satellite Road, Ahmedabad 380015, Gujarat, India;Chungkham Thombson, Dept. of Basic Sciences (Physics), Manipur Technical University, Govt. Polytechnic Campus, Takyel, Imphal 795004, Manipur, India;Dr Purvee Joshi, Space Applications Centre- Indian Space Research Organisation, Jodhpur Tekra, Satellite Road, Ahmedabad 380015, Gujarat, India;Dr Rajkumar Kamaljit Singh, Dept. of Basic Sciences (Physics), Manipur Technical University, Govt. Polytechnic Campus, Takyel, Imphal 795004, Manipur, India;Dr Sandip Rashmikant Oza, Space Applications Centre- Indian Space Research Organisation, Jodhpur Tekra, Satellite Road, Ahmedabad 380015, Gujarat, India;Dr Sushil Kumar Singh, Space Applications Centre- Indian Space Research Organisation, Jodhpur Tekra, Satellite Road, Ahmedabad 380015, Gujarat, India;Manipur Technical University, Govt. Polytechnic Campus, Takyel, Imphal 795004, Manipur, India ~72: Chungkham Thombson;Dr Purvee Joshi;Dr Rajkumar Kamaljit Singh;Dr Sandip Rashmikant Oza;Dr Sushil Kumar Singh~

2023/05329 ~ Complete ~54:MULTI-SPECIFIC ANTIBODIES AND ANTIBODY COMBINATIONS ~71:UCB BIOPHARMA SRL, 60, Allée de la Recherche, 1070, Brussels, Belgium ~72: ANDREA JULIE CROSBY;DANIEL JOHN LIGHTWOOD;EMILY MARY CAIRISTINE BARRY;JOHN PAUL SILVA;JOSEPH MICHAEL DAVID RASTRICK;KERRY LOUISE TYSON;PETER CHARLES ELLIOTT;RALPH ADAMS;ROGER

THOMAS PALFRAMAN;SEEMA MAYANK;SEPPE FRANS ROMAN LEYSEN;ZAINAB AHDASH~ 33:EP ~31:20212128.1 ~32:07/12/2020

2023/05331 ~ Complete ~54:TRANSACTION CARD WITH PARTIAL GLASS LAYER ~71:COMPOSECURE, LLC, 500 Memorial Drive, Somerset, New Jersey, 08873, United States of America ~72: ADAM LOWE;KRISTIN POTOCKI~ 33:US ~31:63/107,698 ~32:30/10/2020

2023/05334 ~ Complete ~54:METHOD AND SYSTEM FOR GENERATING A DYNAMIC CARD VERIFICATION VALUE FOR PROCESSING A TRANSACTION ~71:COMPOSECURE, LLC, 500 Memorial Drive, Somerset, New Jersey, 08873, United States of America ~72: ADAM LOWE;TODD NUZUM~ 33:US ~31:63/115,888 ~32:19/11/2020

2023/05339 ~ Complete ~54:TREATMENT OR PREVENTION OF HIV INFECTION ~71:Janssen Sciences Ireland Unlimited Company, Barnahely, Ringaskiddy, CO CORK, IRELAND, Ireland ~72: CRAUWELS, Herta Maria Ludovica;HOLM, René;KRAUS, Guenter Karl Wilhelm;NIEMEIJER, Nico Rudolph;VERVOORT, Iwan Caroline F.;VESOLE, Steven M.~ 33:US ~31:63/114,997 ~32:17/11/2020

2023/05343 ~ Complete ~54:ANTI-HLA-G ANTIBODIES AND USE THEREOF ~71:F. Hoffmann-La Roche AG, Grenzacherstrasse 124, BASEL 4070, SWITZERLAND, Switzerland ~72: BUJOTZEK, Alexander;CARPY GUTIERREZ CIRLOS, Alejandro;FREIMOSER-GRUNDSCHOBER, Anne;HAGE, Carina;HOFER, Thomas;KIRCHNER, Silke;MAJETY, Meher;MOESSNER, Ekkehard;NEUMANN, Christiane;SPICK, Christian;TIEFENTHALER, Georg;WEINDL, Thomas~ 33:EP ~31:20214951.4 ~32:17/12/2020;33:EP ~31:21203272.6 ~32:18/10/2021

2023/05399 ~ Complete ~54:DOUBLE-FOCUS COMPOUND EYE STRUCTURE FOR OUTDOOR RAIN, FOG AND WEAK LIGHT ENVIRONMENTS AND PREPARATION PROCESS ~71:NORTHWEST A&F UNIVERSITY, NO. 3 TAICHENG ROAD, People's Republic of China ~72: FU, Zuoli;GAO, Xiaojun;HUANG, Yuxiang;LI, Jiang;LI, Yang;MA, Shen;YAN, Xiaoli;YANG, Ruiji~ 33:CN ~31:202320494945.8 ~32:15/03/2023

2023/05341 ~ Complete ~54:FUNGICIDAL COMPOSITIONS ~71:Syngenta Crop Protection AG, Rosentalstrasse 67, BASEL 4058, SWITZERLAND, Switzerland ~72: DUVARESCH, Dhiego;HAAS, Ulrich Johannes;QUARANTA, Laura~ 33:EP ~31:20211348.6 ~32:02/12/2020;33:EP ~31:20213345.0 ~32:11/12/2020;33:EP ~31:21196079.4 ~32:10/09/2021

2023/05324 ~ Complete ~54:WORK IMPLEMENT ASSEMBLY USING ADAPTERS, ADAPTER COVERS, AND A NOTCHED BASE EDGE ~71:CATERPILLAR INC., 100 NE Adams Street, United States of America ~72: SERRURIER, Douglas, C.;SINN, Eric, T.;YOEU, Rammagy~ 33:US ~31:16/951,630 ~32:18/11/2020

2023/05400 ~ Complete ~54:LIGHTWEIGHT HIGH-SPEED TRANSPLANTING DEVICE ~71:NORTHWEST A&F UNIVERSITY, NO. 3 TAICHENG ROAD, People's Republic of China ~72: FENG, Baili;HUANG, Yuxiang;LI, Jiang;LI, Wei;LI, Yang;YAN, Xiaoli;YANG, Qinghua;ZHENG, Zhiqi~ 33:CN ~31:202320494913.8 ~32:15/03/2023

2023/05347 ~ Provisional ~54:CONTACTS NOTIFYING SERVICES ~71:SAKHILE HOPEWELL NTULI, 1351 EMPUMELELWENI EX5, South Africa ~72: SAKHILE HOPEWELL NTULI~

2023/05317 ~ Complete ~54:ENVIRONMENTAL LAW PROTECTION DATA SHARING SYSTEM BASED ON BLOCKCHAIN ~71:Zhengzhou University of Aeronautics, No.2, University Middle Road, Erqi District, Zhengzhou City, Henan Province, People's Republic of China ~72: Jiyang LI;Yanjuan TENG~

2023/05321 ~ Complete ~54:METHOD FOR TREATING WASTE PLASTICS BY POLYMER DISSOLUTION AND ADSORPTION PURIFICATION ~71:IFP ENERGIES NOUVELLES, 1 et 4 avenue de Bois-Préau, France ~72: AHMADI-MOTLAGH, Amir Hossein;LEINEKUGEL LE COCQ, Damien;SIBEAUD, Mathilde;WEISS, Wilfried~ 33:FR ~31:FR2013161 ~32:14/12/2020

2023/05322 ~ Complete ~54:METHOD FOR TREATING USED PLASTICS BY DISSOLVING THE POLYMERS AND PURIFYING THEM BY WASHING ~71:IFP ENERGIES NOUVELLES, 1 et 4 avenue de Bois-Préau, France ~72: AHMADI-MOTLAGH, Amir Hossein;HAROUN, Yacine;LEINEKUGEL LE COCQ, Damien;WEISS, Wilfried~ 33:FR ~31:FR2013160 ~32:14/12/2020

2023/05336 ~ Complete ~54:A SUBSTITUTED TETRAHYDROISOQUINOLINE DERIVATIVE AS A D1 POSITIVE ALLOSTERIC MODULATOR ~71:UCB BIOPHARMA SRL, 60, Allée de la Recherche, 1070, Brussels, Belgium ~72: CLAUDE DELATOUR~ 33:EP ~31:20215255.9 ~32:18/12/2020

2023/05346 ~ Complete ~54:COMPOSITE MATERIAL HOT-PRESS FORMING DEVICE ~71:BEIJING NATIONAL INNOVATION INSTITUTE OF LIGHTWEIGHT LTD., Floor 1 To 2, Building 3, Yard 10, Yanqi Hexi Road, Yanqi Economic Development Zone, Huairou District, Beijing, 101400, People's Republic of China;DEZHOU BRANCH OF BEIJING NATIONAL INNOVATION INSTITUTE OF LIGHTWEIGHT LTD., 200 Meters North Of The Intersection Of Fusheng Road And Hengdong Road, Tianqu Sub-district Office, Decheng District, Dezhou, Shandong, 253000, People's Republic of China ~72: FAN, Guanghong;REN, Mingwei;REN, Zhangyu;WANG, Yong;ZHU, Xiangdong~ 33:CN ~31:202011489187.8 ~32:16/12/2020

2023/05314 ~ Complete ~54:SURGICAL GUIDE PIN ~71:BECKER, Gert Stephanus, 1378b Breyer Avenue, Waverley, South Africa ~72: BECKER, Gert Stephanus~ 33:ZA ~31:2022/05682 ~32:24/05/2022

2023/05315 ~ Complete ~54:CUTTING PROPAGATION METHOD OF ROOTSTOCK OF HARD-ROOTED FRUIT TREE ~71:Weifang Academy of Agricultural Sciences, No.1921 Shengli East Street, Kuiwen District, Weifang City, Shandong Province, People's Republic of China ~72: GAO Jing;HAN Xia;LI Tian;LIN Yundi;XIAO Long;ZHAO Jingjie~

2023/05316 ~ Complete ~54:GIP/GLP1 AGONIST COMPOSITIONS ~71:Eli Lilly and Company, Lilly Corporate Center, INDIANAPOLIS 46285, IN, USA, United States of America ~72: CORVARI, Vincent John;MINIE, Christopher Sears;MISHRA, Dinesh Shyandeo;QIAN, Ken Kangyi~ 33:US ~31:62/688,632 ~32:22/06/2018

2023/05318 ~ Complete ~54:SOCIAL DISPUTE MEDIATION SIMULATION AND DEMONSTRATION TEST SYSTEM ~71:Zhengzhou University of Aeronautics, No.2, University Middle Road, Erqi District, Zhengzhou City, Henan Province, People's Republic of China ~72: Jiyang LI;Yanjuan TENG~

2023/05320 ~ Complete ~54:CONSTRUCTION MONITORING ROBOT ~71:HUZHOU VOCATIONAL & TECHNICAL COLLEGE, No. 299 Xuefu Road, Wuxing District, Huzhou, Zhejiang, People's Republic of China ~72: Liangliang CHEN;Lu SUN;Yuheng MA;Yunfei WU;Zeli WU~

2023/05325 ~ Complete ~54:WORK IMPLEMENT ASSEMBLY USING ADAPTERS, ADAPTER COVERS, AND A NOTCHED BASE EDGE ~71:CATERPILLAR INC., 100 NE Adams Street, United States of America ~72: SERRURIER, Douglas, C.;SINN, Eric, T.;YOEU, Rammagy~ 33:US ~31:16/951,186 ~32:18/11/2020

2023/05326 ~ Complete ~54:ADAPTER FOR ATTACHING A TOOL TO A WORK IMPLEMENT ~71:CATERPILLAR INC., 100 NE Adams Street, United States of America ~72: SERRURIER, Douglas, C.;SINN, Eric, T.;YOEU, Rammagy~ 33:US ~31:16/951,231 ~32:18/11/2020

2023/05328 ~ Complete ~54:ABRASIVE MATERIAL, ACCESSORIES FOR A TOOL CONTAINING SUCH ABRASIVE MATERIAL AND METHOD OF MANUFACTURING SUCH ABRASIVE MATERIAL ~71:MARIS, Johan Jozef F, Kneippstraat 90, Belgium ~72: MARIS, Johan Jozef F~ 33:BE ~31:2020/5822 ~32:16/11/2020

2023/05332 ~ Complete ~54:METHOD AND PLANT FOR PRODUCING SYNGAS ~71:TOPSOE A/S, Haldor Topsøes Allé 1, 2800, Kgs. Lyngby, Denmark ~72: JOHN BØGILD HANSEN;PETER MØLGAARD MORTENSEN~ 33:EP ~31:20216623.7 ~32:22/12/2020

2023/05340 ~ Complete ~54:PESTICIDAL COMPOSITIONS ~71:Syngenta Crop Protection AG, Rosentalstrasse 67, BASEL 4058, SWITZERLAND, Switzerland ~72: FALLUTO, Francesca;HALLAM-BARNES, Gemma~ 33:EP ~31:20210432.9 ~32:27/11/2020

2023/05342 ~ Complete ~54:AEROSOL GENERATING MATERIAL ~71:Nicoventures Trading Limited, Globe House, 1 Water Street, LONDON WC2R 3LA, UNITED KINGDOM, United Kingdom ~72: BALLESTEROS GOMEZ, Pablo Javier;KARTIKA DEWI, Tanti;NOVAN HIDAYAT, Mohammad;RIKO VINERSIANO, Brandhika;YODHANA PUTRA, Bayu~ 33:GB ~31:2019625.9 ~32:11/12/2020

2023/05313 ~ Complete ~54:SURGICAL MOUNT ~71:BECKER, Gert Stephanus, 1378b Breyer Avenue, Waverley, South Africa ~72: BECKER, Gert Stephanus~ 33:ZA ~31:2022/05683 ~32:24/05/2022

2023/05323 ~ Complete ~54:METHOD FOR TREATING WASTE PLASTICS BY POLYMER DISSOLUTION AND PURIFICATION BY EXTRACTION ~71:IFP ENERGIES NOUVELLES, 1 et 4 avenue de Bois-Préau, France ~72: AUGIER, Frederic;LEINEKUGEL LE COCQ, Damien;SIBEAUD, Mathilde;WEISS, Wilfried~ 33:FR ~31:FR2013159 ~32:14/12/2020

2023/05327 ~ Complete ~54:STEEL WIRE MESH MADE OF STEEL WIRES HAVING HEXAGONAL LOOPS, PRODUCTION DEVICE, AND PRODUCTION METHOD ~71:GEOBRUGG AG, Aachstrasse 11, Switzerland ~72: Mario BRUNN~ 33:DE ~31:10 2021 100 678.3 ~32:14/01/2021

2023/05330 ~ Complete ~54:METHOD AND SYSTEM FOR RECYCLING OF DISTILLATION ENERGY IN PLANTS WITH CO2 IMPORT FROM CARBON CAPTURE ~71:TOPSOE A/S, Haldor Topsøes Allé 1, 2800, Kgs. Lyngby, Denmark ~72: EMIL ANDREAS TJÄRNEHOV~ 33:EP ~31:21151426.0 ~32:13/01/2021

2023/05333 ~ Complete ~54:AMORPHOUS SOLID DISPERSIONS ~71:UCB BIOPHARMA SRL, 60, Allée de la Recherche, 1070, Brussels, Belgium ~72: AYMERIC OUSSET;FAIZA LAREDJ;ROSANNA CHIRICO~ 33:EP ~31:20215253.4 ~32:18/12/2020

2023/05338 ~ Complete ~54:IDENTIFYING 3D OBJECTS ~71:Fundació Institut de Ciències Fotòniques, Parc Mediterrani de la Tecnologia, Av. Carl Friedrich Gauss, 3, Castelldefels, BARCELONA 08860, SPAIN, Spain;Institució Catalana de Recerca I Estudis Avançats, Pg. Lluís Companys, 23, BARCELONA 08010, SPAIN, Spain ~72: GRUDININ, Anatoly;NOYAN, Mehmet Alican;PRUNERI, Valerio~ 33:EP ~31:20383072.4 ~32:09/12/2020

2023/05344 ~ Complete ~54:NOVEL PYRIMIDIN-2-YL SULFONAMIDE DERIVATIVES ~71:F. Hoffmann-La Roche AG, Grenzacherstrasse 124, BASEL 4070, SWITZERLAND, Switzerland ~72: GALLEY, Guido;GOBBI, Luca;GUBA, Wolfgang;MAZUNIN, Dmitry;PINARD, Emmanuel;RICCI, Antonio~ 33:EP ~31:21159452.8 ~32:26/02/2021

2023/05401 ~ Complete ~54:MULTI-FOCUS SELF-CLEANING ANTI-FOG ANTIREFLECTION COMPOUND EYE STRUCTURE AND PREPARATION PROCESS ~71:NORTHWEST A&F UNIVERSITY, NO. 3

TAICHENG ROAD, People's Republic of China ~72: FANG, Liuxin;FU, Zuoli;GAO, Xiaojun;HUANG, Yuxiang;LI, Jiang;LI, Yang;PENG, Ruilong;YAN, Xiaoli~ 33:CN ~31:202320494975.9 ~32:15/03/2023

. - APPLIED ON 2023/05/17 -

2023/05349 ~ Provisional ~54:CURVED URETERIC ACCESS SHEATH ~71:WISNIEWSKI, Pawel, 71 PRINCESS ALICE AVENUE, DURBAN, 4001, South Africa ~72: WISNIEWSKI, Pawel~

2023/05374 ~ Complete ~54:MODULATORS OF THE INTEGRATED STRESS RESPONSE PATHWAY ~71:EVOTEC INTERNATIONAL GMBH, ESSENER BOGEN 7, 22419 HAMBURG, GERMANY, Germany ~72: ATTON, Holly, Victoria;BROWN, Christopher, John;CARR, James, Lindsay;HOFMAN, Gert-Jan;SABBAH, Mohamad;WALTER, Daryl, Simon~ 33:EP ~31:20203312.2 ~32:22/10/2020

2023/05378 ~ Complete ~54:BUNG PLUG SEAL ~71:PROTECHNA S.A., Avenue de la Gare 14, Switzerland ~72: KLATT, Bernd;PREE, Karl-Heinz~ 33:DE ~31:10 2020 131 713.1 ~32:30/11/2020

2023/05385 ~ Complete ~54:AMIDE DERIVATIVE HAVING ANTIVIRAL ACTIVITY ~71:Shionogi & Co., Ltd., 1-8, Doshomachi 3-chome, Chuo-ku, OSAKA-SHI 541-0045, OSAKA, JAPAN, Japan;UBE Corporation, 1978-96, Oaza Kogushi, UBE-SHI 7558633, YAMAGUCHI, JAPAN, Japan ~72: AKAZA, Hiroto;AKIYAMA, Toshiyuki;FUKUDA, Takashi;MATOYAMA, Masaaki;NODU, Kouhei;OKANO, Azusa;SUZUKI, Shinji;TATENO, Yusuke~ 33:JP ~31:2020-180856 ~32:28/10/2020

2023/05390 ~ Complete ~54:METHODS OF TREATING DISEASES AND DISORDERS ~71:Curis, Inc., 128 Spring Street, Building C, Suite 500, LEXINGTON 02421, MA, USA, United States of America ~72: MARTELL, Robert;UGOLKOV, Andrey;VON ROEMELING, Reinhard~ 33:US ~31:63/115,317 ~32:18/11/2020

2023/05394 ~ Complete ~54:MUTATIONS IN FELINE ANTIBODY CONSTANT REGIONS ~71:Zoetis Services LLC, 10 Sylvan Way, PARSIPPANY 07054, NJ, USA, United States of America ~72: BERGERON, Lisa Marie;CAMPOS, Henry Luis;LIGHTLE, Sandra Ann Marie~ 33:US ~31:63/127,313 ~32:18/12/2020

2023/05406 ~ Complete ~54:USE OF GALLA CHINENSIS IN PREPARATION OF DRUG FOR PREVENTING OR TREATING PORCINE REPRODUCTIVE AND RESPIRATORY SYNDROME ~71:NORTHEAST AGRICULTURAL UNIVERSITY, COLLEGE OF VETERINARY MEDICINE, NORTHEAST AGRICULTURAL UNIVERSITY, 600 CHANGJIANG ROAD, People's Republic of China ~72: DONG, Chunliu;LI, Yanhua;ZHENG, Sidi~

2023/05405 ~ Complete ~54:TRADITIONAL CHINESE MEDICINE COMPOSITION FOR IMPROVING REPRODUCTIVE PERFORMANCE OF SOWS AND EFFECTIVE COMPONENTS ~71:NORTHEAST AGRICULTURAL UNIVERSITY, COLLEGE OF VETERINARY MEDICINE, NORTHEAST AGRICULTURAL UNIVERSITY, 600 CHANGJIANG ROAD, People's Republic of China ~72: GENG, Jian;LI, Yanhua;QU, Qianwei;ZHENG, Sidi~

2023/05361 ~ Complete ~54:COMPOSITIONS COMPRISING 2-((1-(2(4-FLUOROPHENYL)-2-OXOETHYL)PIPERIDIN-4-YL)METHYL)ISOINDOLIN-1-ONE FOR TREATING SCHIZOPHRENIA ~71:MINERVA NEUROSCIENCES, INC., 1601 Trapelo Road, Suite 284, Waltham, Massachusetts, 02451, United States of America ~72: MASAHIRO OKUYAMA;NADINE NOEL;REMY LUTHRINGER;SANDRA WERNER~ 33:US ~31:62/086,691 ~32:02/12/2014;33:US ~31:62/248,071 ~32:29/10/2015

2023/05365 ~ Complete ~54:A DUAL SUSPENSION SHOCK ABSORBER ~71:THE TRUSTEES FOR THE TIME BEING OF THE JOHAN BRITZ FAMILY TRUST, THE JOHAN BRITZ FAMILY TRUST c/o BOTTOMLINE

INSIGHT, 7 First Street, ARBORETUM, BLOEMFONTEIN 9301, Free State Province, SOUTH AFRICA, South Africa ~72: Britz, Johannes Hermanus~ 33:ZA ~31:2022/05509 ~32:19/05/2022

2023/05368 ~ Complete ~54:A BREATHING SYSTEM FOR A PATIENT TO BREATHE THROUGH AND INHALE A SUBSTANCE FROM ~71:INSPIRED VENTILATION LTD, 24 Upper Wimpole Street, London, United Kingdom ~72: DARWOOD, Alastair Rupert Joseph~ 33:GB ~31:2017957.8 ~32:14/11/2020

2023/05376 ~ Complete ~54:VEHICLE ACTIVE SUSPENSION INERTIA REGULATION METHOD BASED ON WHEEL SUPPORTING FORCE, AND CONTROL SYSTEM ~71:YANSHAN UNIVERSITY, No.438, Hebei Avenue, People's Republic of China ~72: GONG, Mingde;LIU, Shuang;SUN, Zhiguo;YANG, Bin;ZHANG, Zhuxin;ZHAO, Dingxuan~ 33:CN ~31:202110714847.6 ~32:26/06/2021

2023/05377 ~ Complete ~54:IMIDAZOQUINOLINE COMPOUND HAVING ANTI-INFLAMMATORY, ANTIFUNGAL, ANTIPARASITIC, AND ANTICANCER ACTIVITY ~71:WELLSTAT THERAPEUTICS CORPORATION, 14200 Shady Grove Road, Suite 600, United States of America ~72: GARCIA GARCIA, Rolando, Alejandro;SIMPSON, David, Michael;VON BORSTEL, Reid, Warren~ 33:US ~31:63/122,999 ~32:09/12/2020

2023/05383 ~ Complete ~54:TOPICAL ADMINISTRATION OF 2- (DIETHYLAMINO) ETHYL 2- (4-ISOBUTYLPHENYL) PROPIONATE FOR TREATMENT OF DISEASES ~71:TECHFIELDS INC., 731 Alexander Road, Suite 205, Princeton, New Jersey, 08540, United States of America ~72: CHONGXI YU;LINA XU~ 33:CN ~31:PCT/CN2020/094560 ~32:05/06/2020

2023/05386 ~ Complete ~54:A SYSTEM AND METHOD FOR TRACING MEMBERS OF AN ANIMAL POPULATION ~71:IdentiGEN Limited, Block 2, Blackrock Business Park, Carysfort Avenue, BLACKROCK, CO. 35500, IRELAND, Ireland ~72: MITCHELL, Robert William;RAPAPORT-ROM, Yuval;RATTI, Matteo~ 33:IL ~31:278965 ~32:25/11/2020;33:US ~31:63/190,243 ~32:19/05/2021

2023/05359 ~ Complete ~54:NEGATIVE PRESSURE PUNCTURE SYRINGE CONVENIENT FOR PRESSURE ADJUSTMENT ~71:The Affiliated Hospital of Southwest Medical University, No.25,Taiping Road,Jiangyang, Luzhou, Sichuan, People's Republic of China ~72: FU Yong;GAO Yidan;LIAO Bin;LIAO Yuanyang;LIU Hui;LIU Lang;OUYANG Yaling;WAN Juyi~

2023/05366 ~ Complete ~54:A METHOD FOR MANUFACTURING A RECYCLABLE ARTICLE FROM MUNICIPAL SOLID WASTE ~71:TRASHCON LABS PRIVATE LIMITED, Alps 1101, Heritage Estate Yelahanka New Town, India ~72: JAIN, Saurabh;MADHUBALA, Nivedha Raghavan;MONDAL, Swaraj~ 33:IN ~31:202041045486 ~32:19/10/2020

2023/05375 ~ Complete ~54:ENHANCEMENTS FOR MEASUREMENT REPORTING IN NON-TERRESTRIAL NETWORKS ~71:TELEFONAKTIEBOLAGET LM ERICSSON (PUBL), SE-164 83 STOCKHOLM, SWEDEN, Sweden ~72: HOFSTRÖM, Björn;MÄÄTTANEN, Helka-Liina;RUNE, Johan;YAVUZ, Emre~ 33:US ~31:63/104,412 ~32:22/10/2020

2023/05379 ~ Complete ~54:DETONATOR SUPPORT DEVICE FOR CHARGING A BLASTHOLE, BLASTING SYSTEM, METHOD OF PREPARING A DETONATOR SUPPORT DEVICE, EXPLOSIVE MATERIAL CHARGING VEHICLE AND DATA MEDIUM ~71:LUOSSAVAARA-KIIRUNAVAARA AB, P.O. Box 952, 971 28 Luleå, Sweden ~72: NIKOLAOS PETROPOULOS~ 33:SE ~31:2051232-3 ~32:22/10/2020

2023/05381 ~ Complete ~54:EXPLOSIVE MATERIAL CHARGING DEVICE FOR CHARGING A BOREHOLE METHOD OF POSITIONING AN EXPLOSIVE MATERIAL CHARGING DEVICE EXPLOSIVE MATERIAL

CHARGING VEHICLE AND DATA MEDIUM ~71:LUOSSAVAARA-KIIRUNAVAARA AB, P.O. Box 952, 971 28 Luleå, Sweden ~72: NIKOLAOS PETROPOULOS~ 33:SE ~31:2051234-9 ~32:22/10/2020

2023/05382 ~ Complete ~54:SYSTEMS AND METHODS FOR INDICATION OF PHASE TRACKING REFERENCE SIGNAL-DEMODULATION REFERENCE SIGNAL ASSOCIATION ~71:ZTE CORPORATION, ZTE Plaza, Keji Road South, Hi-Tech Industrial Park, Nanshan, Shenzhen, Guangdong, 518057, People's Republic of China ~72: CHUANGXIN JIANG;MENG MEI;YANG ZHANG;YU PAN;ZHAOHUA LU~

2023/05388 ~ Complete ~54:HOP EXTRACT ~71:Heineken Supply Chain B.V., Burgemeester Smeetsweg 1, ZOETERWOUDE 2382 PH, THE NETHERLANDS, Netherlands ~72: HOLLERING, Paulien~ 33:EP ~31:20215228.6 ~32:17/12/2020

2023/05443 ~ Provisional ~54:HYBIRD HYDRO-GAS POWER UNIT WITH FLY WHEEL ~71:Welcome Nndwamato Manyanya, 45 Summerset Estate Blue Hills, South Africa ~72: Welcome Nndwamato Manyanya~

2023/05403 ~ Complete ~54:USE OF FRUCTUS POLYGONI ORIENTALIS IN PREPARATION OF DRUG FOR PREVENTING OR TREATING PORCINE REPRODUCTIVE AND RESPIRATORY SYNDROME ~71:NORTHEAST AGRICULTURAL UNIVERSITY, COLLEGE OF VETERINARY MEDICINE, NORTHEAST AGRICULTURAL UNIVERSITY, 600 CHANGJIANG ROAD, People's Republic of China ~72: CUI, Wenqiang;HAN, Xiao;LI, Yanhua~

2023/05351 ~ Provisional ~54:USER INTERFACE FOR A FINANCIAL MODELLING SYSTEM ~71:JULIEN KENT SWATTON-SEYMOUR, 3 Onyx, Golf View Close, South Africa ~72: SWATTON-SEYMOUR, Julien Kent~

2023/05355 ~ Complete ~54:ONLINE QUESTION-ANSWERING INTERACTIVE SYSTEM FOR SMART CLASSROOM ~71:JINLING INSTITUTE OF TECHNOLOGY, No. 99 Hongjing Avenue, Jiangning District, Nanjing City, Jiangsu Province, People's Republic of China ~72: ZHANG Lifeng;ZOU Lingjun~

2023/05402 ~ Complete ~54:USE OF SEMEN PLANTAGINIS IN PREPARATION OF DRUG FOR PREVENTING OR TREATING PORCINE REPRODUCTIVE AND RESPIRATORY SYNDROME ~71:NORTHEAST AGRICULTURAL UNIVERSITY, COLLEGE OF VETERINARY MEDICINE, NORTHEAST AGRICULTURAL UNIVERSITY, 600 CHANGJIANG ROAD, People's Republic of China ~72: CUI, Wenqiang;HAN, Xiao;LI, Yanhua;QU, Qianwei~

2023/05395 ~ Complete ~54:PINCH LATCH ASSEMBLY ~71:Leer Group, 28858 Ventura Drive, ELKHART 46517, IN, USA, United States of America ~72: DYLEWSKI II, Eugene A.;MATTISON, Christopher David~ 33:US ~31:63/120,976 ~32:03/12/2020;33:US ~31:17/537,613 ~32:30/11/2021

2023/05384 ~ Complete ~54:A FORESTRY MANAGEMENT SYSTEM ~71:M-PLANTER.NZ LIMITED, BWTL Advisory Limited, New Zealand ~72: FEAR, Henry Albert~ 33:AU ~31:2020904202 ~32:16/11/2020

2023/05444 ~ Provisional ~54:SMART KINETIC EQUIPMENT ~71:Welcome Nndwamato Manyanya, 45 Summerset Estate Blue Hills, South Africa ~72: Welcome Nndwamato Manyanya~

2023/05370 ~ Complete ~54:MODULATORS OF THE INTEGRATED STRESS RESPONSE PATHWAY ~71:EVOTEC INTERNATIONAL GMBH, ESSENER BOGEN 7, 22419 HAMBURG, GERMANY, Germany ~72: ATTON, Holly, Victoria;BROWN, Christopher, John;CONVERS-REIGNIER, Serge;PALMER, Christopher, Francis;SABBAH, Mohamad;WALTER, Daryl, Simon~ 33:EP ~31:20203311.4 ~32:22/10/2020;33:EP ~31:21192154.9 ~32:19/08/2021

2023/05666 ~ Provisional ~54:LIVESTOCK PREGNANCY TEST ~71:Sinethemba Zikalala, 95 Mowbray, South Africa ~72: Sinethemba Zikalala~

2023/05348 ~ Provisional ~54:PRODUCTION OF STRAIGHT WIRE SECTIONS ~71:COCHRANE STEEL PRODUCTS (PTY) LTD, 125 Fitter Road, Spartan, South Africa ~72: COCHRANE, Richard Bruce~

2023/05352 ~ Provisional ~54:WASTEWATER TREATMENT SYSTEM ~71:PHOENIX WATER (PTY) LTD., 38A Forge Road, SPARTAN, Kempton Park, Johannesburg 1620, Gauteng, SOUTH AFRICA, South Africa ~72: VORSTER, Barry Robert~

2023/05354 ~ Complete ~54:SYSTEM AND METHOD FOR RECOVERING WASTE HEAT ENERGY TO GENERATE ELECTRICITY ~71:Ningbo Polytechnic, No. 388 Lushan East Road, Beilun District, Ningbo City, Zhejiang Province, People's Republic of China ~72: GUO Xiaolong;HONG Chengxiu;HUANG Qiyue;ZHONG Xiaoyan~

2023/05371 ~ Complete ~54:APERIODIC SYSTEM INFORMATION BROADCAST ~71:TELEFONAKTIEBOLAGET LM ERICSSON (PUBL), SE-164 83 STOCKHOLM, SWEDEN, Sweden ~72: HE, Chao;MÄÄTTANEN, Helka-Liina;RUNE, Johan;YAVUZ, Emre~ 33:US ~31:63/104,094 ~32:22/10/2020

2023/05353 ~ Complete ~54:METHOD FOR MOUNTING INSULATION BOARDS FOR WIDE-ANGLE SLOPING ROOF ~71:THE SECOND CONSTRUCTION ENGINEERING COMPANY LTD. OF CHINA CONSTRUCTION SECOND ENGINEERING BUREAU, No.0169 Qianhai Road, Nanshan subdistrict, Nanshan District, Shenzhen, 518000, People's Republic of China ~72: CUI, Qi;FENG, Lilei;LIU, Xiao;SONG, Lianshuang;ZHANG, Jinghe;ZHAO, Rui~ 33:CN ~31:202310357618.2 ~32:06/04/2023

2023/05362 ~ Complete ~54:DREDGE SYSTEM ~71:EDDY PUMP CORPORATION, 15405 Olde Hwy 80, United States of America ~72: GONZALEZ, Roberto;WAHLGREN, Daniel~ 33:US ~31:63/343,678 ~32:19/05/2022;33:US ~31:18/196,201 ~32:11/05/2023

2023/05369 ~ Complete ~54:ADSORBENT MATERIAL FOR REMOVING NITROGEN OXIDES FROM INDOOR OR CABIN AIR ~71:BASF CORPORATION, 100 PARK AVENUE, FLORHAM PARK, NEW JERSEY 07932, USA, United States of America ~72: FURBECK, Howard, J.;WEINBERGER, David, S.~ 33:US ~31:63/104,347 ~32:22/10/2020

2023/05372 ~ Complete ~54:PRECIPITATED SILICIC ACIDS, PROCESS FOR THEIR PREPARATION AND USE THEREOF ~71:EVONIK OPERATIONS GMBH, RELLINGHAUSER STRASSE 1-11, 45128 ESSEN, GERMANY, Germany ~72: MASCHKE, Dominik;OCHENDUSZKO, Agnieszka;WEHMEIER, André~ 33:EP ~31:20204259.4 ~32:28/10/2020

2023/05393 ~ Complete ~54:PROCESS FOR MAKING A PD-1/PD-L1 INHIBITOR AND SALTS AND CRYSTALLINE FORMS THEREOF ~71:Incyte Corporation, 1801 Augustine Cut-Off, WILMINGTON 19803, DE, USA, United States of America ~72: CARPER, Daniel;JIA, Zhongjiang;SCLAFANI, Joseph A.;SHEN, Bo;SULEIMAN, Osama;WANG, Dengjin;WILSON, Robert;WRIGHT, Mark;ZHOU, Jiacheng~ 33:US ~31:63/110,792 ~32:06/11/2020

2023/05356 ~ Complete ~54:COMPOUND MICROBIAL INOCULUM AND APPLICATION IN REMEDIATION OF HEAVY METAL POLLUTION IN SOIL ~71:Anhui Agricultural University, No. 130 Changjiang XI road, Hefei city, Anhui province, People's Republic of China ~72: DING Kexin;GONG Zhifeng;HU Hongxiang;LU Mengxing;MA Chao;YE Sumei;YE Xinxin;ZENG Desheng;ZHANG Hongyu~ 33:CN ~31:2023104625218 ~32:26/04/2023

2023/05357 ~ Complete ~54:METHOD FOR PREPARING PORTLAND CEMENT FEATURING EARLY STRENGTH, LOW SHRINKAGE, AND LOW HEAT ~71:China Building Materials Academy Co., Ltd., No.1 GuanzhuangDongli, Chaoyang District, Beijing, 100024, People's Republic of China;China National Building

Material Group Co., Ltd., Tower B, Building 2, Guohai Plaza,No. 17 Fuxing Road, Haidian District, Beijing, 100036, People's Republic of China ~72: Guang YAO;Kunyue ZHANG;Min WANG;Wen HUANG;Xiao ZHI;Xiaopeng AN;Xin SHEN;Yang YU;Zhaijun WEN~ 33:CN ~31:202211053589.2 ~32:31/08/2022

2023/05358 ~ Complete ~54:TIBIAL DUAL STYLUS INSTRUMENT HAVING WIDE CONVEX STYLUS TIPS AND COMPONENTS THEREOF ~71:MICROPORT ORTHOPEDICS HOLDINGS INC., 5677 Airline Road, United States of America;STEENSEN ORTHOPEDIC SYSTEMS, LLC, 5638 Hayden Run Road, United States of America ~72: DANG, Duy Q.;HARRIS, Brian R.;STEENSEN, Robert N.~ 33:US ~31:63/344,113 ~32:20/05/2022;33:US ~31:18/307,208 ~32:26/04/2023

2023/05392 ~ Complete ~54:NEW CYCLIC COMPOUNDS, PROCESS FOR THE PRODUCTION THEREOF, AND USE OF SAID CYCLIC COMPOUNDS IN COSMETIC PREPARATIONS ~71:Eberhard Karls Universität Tübingen, Geschwister-Scholl-Platz, TÜBINGEN 72074, GERMANY, Germany ~72: GROND, Stephanie;HEUER, Andrea;HUEPEDEN, Jennifer;KRISMER, Bernhard;SAUR, Julian S.;WIRTZ, Sebastian N.~ 33:EP ~31:20208947.0 ~32:20/11/2020

2023/05360 ~ Complete ~54:A NEW BIOLOGICAL FLUIDIZED BED PROCESS WITH HIGH CONCENTRATION POWDER CARRIERS USED FOR TREATMENT OF MUNICIPAL WASTEWATER ~71:Hunan Sanyou Environmental Protection Technology Co., Ltd, 22nd and 23rd floors, Building F1, Lugu Yuyuan, No. 27 Wenxuan Road, Changsha High tech Development Zone, Changsha, People's Republic of China ~72: Dan HOU;Hongbo HAN;Jing YI;Xiaoli CHAI;Yue MOU;Zeheng TANG~

2023/05363 ~ Complete ~54:PEROXYMONOSULFATE TOOTHPOWDER COMPOSITION FOR TENACIOUS STAINS ~71:Colgate-Palmolive Company, 300 Park Avenue, NEW YORK 10022, NY, USA, United States of America ~72: CHOPRA, Suman;DOGO-ISONAGIE, Cajetan;FEI, Lin;GRONLUND, Jennifer~

2023/05373 ~ Complete ~54:MODULATORS OF THE INTEGRATED STRESS RESPONSE PATHWAY ~71:EVOTEC INTERNATIONAL GMBH, ESSENER BOGEN 7, 22419 HAMBURG, GERMANY, Germany ~72: ATTON, Holly, Victoria;SABBAH, Mohamad~ 33:EP ~31:20203309.8 ~32:22/10/2020

2023/05387 ~ Complete ~54:RAILROAD CAR TRUCK DAMPER WEDGE FITTINGS ~71:National Steel Car Limited, 600 Kenilworth Avenue North, HAMILTON L8N 3J4, ONTARIO, CANADA, Canada ~72: BLACK, Kenneth;HEMATIAN, Jamal~ 33:US ~31:17/092,771 ~32:09/11/2020

2023/05391 ~ Complete ~54:ONCOLYTIC IMMUNOTHERAPY BY TUMOR MICRO-ENVIRONMENT REMODELING ~71:KaliVir Immunotherapeutics, Inc., 240 Alpha Drive, PITTSBURGH 15238, PA, USA, United States of America ~72: BYRD, Daniel J.;THORNE, Stephen Howard;ZHANG, Mingrui~ 33:US ~31:63/116,004 ~32:19/11/2020

2023/05397 ~ Provisional ~54:EASYRISE APP ~71:HLENGIWE ZAMAZINDELA MANTUTLE, 473 MEYERSIG LIFESTYLE ESTATE, 90 LANGKLOOF STREET, South Africa;KGAILE BENJAMIN JOSEPH MOGOYE, 255 Tinza Lifestyle Estate, Forest Drive, South Africa;SICELO SAMUEL NGUBANE, 144 TERENURE ESTATE, ORANGE RIVER DRIVE, South Africa;SISA JAMES NJIKELANA, B117 LABORIE VILLAGE, 1A MENTON ROAD, South Africa ~72: KGAILE BENJAMIN JOSEPH MOGOYE~

2023/05404 ~ Complete ~54:TRADITIONAL CHINESE MEDICINE COMPOSITION FOR IMPROVING IMMUNITY OF LIVESTOCK AND EFFECTIVE COMPONENTS ~71:NORTHEAST AGRICULTURAL UNIVERSITY, COLLEGE OF VETERINARY MEDICINE, NORTHEAST AGRICULTURAL UNIVERSITY, 600 CHANGJIANG ROAD, People's Republic of China ~72: GENG, Geng;LI, Yanhua;QU, Qianwei~

2023/05350 ~ Provisional ~54:GEOGENIC PHOTONIC GEOTHERMAL TECHNOLOGY ~71:SERROUNE ABDELMOUMEN, N°5 Sturdee Avenue, Suite 301, 2196 Rosebank, Johannesburg, 2196, South Africa ~72: SERROUNE ABDELMOUMEN~

2023/05364 ~ Complete ~54:VERIFICATION SYSTEM ~71:AKHIDUE, Charles Osemudiamen, The Catalyst, 100 Pretoria Ave, South Africa ~72: AKHIDUE, Charles Osemudiamen~ 33:ZA ~31:2022/13390 ~32:12/12/2022

2023/05367 ~ Complete ~54:LIPOCALIN MUTEIN DRY POWDER FORMULATION FOR TREATMENT OF ASTHMA ~71:ASTRAZENECA AB, 151 85, Sweden ~72: Ankur AJMERA;David Robert;Marja Riikka SAVOLAINEN;Mary FITZGERALD;Philip GARDINER;Robert Alexander PALMÉR;Sandra GRACIN~ 33:US ~31:63/127,903 ~32:18/12/2020

2023/05380 ~ Complete ~54:A BLASTING SYSTEM AND A METHOD OF EXPLOSIVE MATERIAL CHARGING ~71:LUOSSAVAARA-KIIRUNAVAARA AB, P.O. Box 952, 971 28 Luleå, Sweden ~72: NIKOLAOS PETROPOULOS~ 33:SE ~31:2051233-1 ~32:22/10/2020

2023/05389 ~ Complete ~54:METHODS FOR CULTURING IMMUNE CELLS ~71:Lyell Immunopharma, Inc., 201 Haskins Way, SOUTH SAN FRANCISCO 94080 , CA, USA, United States of America ~72: PATEL, Yogin;RESTIFO, Nicholas P.;VODNALA, Suman Kumar~ 33:US ~31:63/198,933 ~32:23/11/2020;33:US ~31:63/146,477 ~32:05/02/2021;33:US ~31:63/153,922 ~32:25/02/2021;33:US ~31:63/165,023 ~32:23/03/2021;33:US ~31:63/167,592 ~32:29/03/2021;33:US ~31:63/181,218 ~32:28/04/2021;33:US ~31:63/273,138 ~32:28/10/2021

. - APPLIED ON 2023/05/18 -

2023/05414 ~ Complete ~54:MIX CALCULATOR ~71:PRECISION PLANTING LLC, 23207 Townline Road, Tremont, United States of America ~72: ALLGAIER, Ryan;COOPER, Myra Renee;O'ROURKE, Brendan;WILCOXSON, David Aaron~ 33:US ~31:63/150,441 ~32:17/02/2021;33:US ~31:63/154,222 ~32:26/02/2021

2023/05421 ~ Complete ~54:PEPTIDE CROSSLINKING AGENT AND CROSSLINKED PEPTIDE WHICH IS CROSSLINKED USING SAID CROSSLINKING AGENT ~71:KAGOSHIMA UNIVERSITY, 21-24, Korimoto 1-chome Kagoshima-shi, Kagoshima, 8908580, Japan ~72: HIROSHI NAKAYAMA;MD ABDUR RAFIQUE;YUJI ITO~ 33:JP ~31:2020-186833 ~32:09/11/2020;33:JP ~31:2021-082739 ~32:14/05/2021

2023/05426 ~ Complete ~54:METHOD FOR CONTROLLING THE PRETREATMENT AND/OR ENZYMATIC HYDROLYSIS OF A LIGNOCELLULOSIC MATERIAL ~71:SEKAB E-TECHNOLOGY AB, Box 286, 891 26, Örnsköldsvik, Sweden ~72: ADNAN CAVKA;ELIAS SUNDVALL~ 33:EP ~31:20213392.2 ~32:11/12/2020

2023/05433 ~ Complete ~54:PDE9 INHIBITORS FOR TREATING CARDIAC FAILURE ~71:Cardurion Pharmaceuticals, Inc., 78 Blanchard Road, Suite 200, BURLINGTON 01803, MA, USA, United States of America;Vanderbilt University, 2201 West End Avenue, 350 Kirkland Hall, NASHVILLE 37240, TN, USA, United States of America ~72: BALLAL, Rahul Dilip;GUPTA, Deepak;MACIEL, Thiago Trovati;WANG, Thomas~ 33:US ~31:63/106,301 ~32:27/10/2020

2023/05440 ~ Complete ~54:A COMPUTER IMPLEMENTED METHOD AND SYSTEM ~71:nChain Licensing AG, Grafenauweg 6, ZUG 6300, SWITZERLAND, Switzerland ~72: RAND, Ricky Charles~ 33:GB ~31:2108384.5 ~32:11/06/2021

2023/05411 ~ Complete ~54:A METHOD FOR PREPARATION OF METAL NON-METAL INCORPORATED ZNO NANOSPHERE HETEROGENEOUS CATALYST FOR THE PHOTODEGRADTION OF ORGANIC DYE ~71:DR.VISHWANATH KARAD MIT WORLD PEACE UNIVERSITY, DR. VISHWANATH KARAD MIT - WORLD PEACE UNIVERSITY, S.NO.124, PAUD ROAD, KOTHRUD, PUNE, MAHARASHTRA, 411038, India;INGALE,Raju Shivaji, SCHOOL OF PHYSICS, DR. VISHWANATH KARAD MITWORLD PEACE UNIVERSITY S.NO.124, PAUD ROAD, KOTHRUD, PUNE, MAHARASHTRA, 411038, India;KULKARNI,Sachin A., SCHOOL OF PHYSICS, DR. VISHWANATH KARAD MITWORLD PEACE UNIVERSITY S.NO.124, PAUD ROAD, KOTHRUD, PUNE, MAHARASHTRA, 411038, India;PATIL,Ishwar, P.S.G.V.P.M ARTS, COMMERCE AND SCIENCE COLLEGE, SHAHADA, NANDURBAR, India ~72: INGALE,Raju Shivaji;KULKARNI,Sachin A.;PATIL,Ishwar~

2023/05425 ~ Complete ~54:PHARMACEUTICAL COMPOSITION FOR USE IN THE PREVENTION OR TREATMENT OF A CONDITION ASSOCIATED WITH A REDUCTION IN THE NUMBER OF LACTOBACILLI IN THE VAGINA ~71:KING'S COLLEGE LONDON, The Strand, London, WC2R 2LS, United Kingdom;UCL BUSINESS LTD, University College London Gower Street, London, WC1E 6BT, United Kingdom ~72: ALASTAIR SUTCLIFFE;CATHERINE TULEU;PAUL LONG~ 33:GB ~31:2018068.3 ~32:17/11/2020

2023/05430 ~ Complete ~54:TUNNEL EXCAVATION METHOD FOR UPPER-SOFT AND LOWER-HARD STRATUM ~71:CHINA RAILWAY 19TH BUREAU GROUP CO., LTD., No.19 Ronghua South Road, Beijing Economic and Technological Development Zone, Beijing, 100176, People's Republic of China;CHINA RAILWAY 19TH BUREAU GROUP FIFTH ENGINEERING CO., LTD., No.586 Yongzheng Street, Jinzhou District Dalian, Liaoning, 116000, People's Republic of China ~72: JIAN YU;JIANHUI WANG;JIWEI WANG;KAI YANG;SHUAI ZHANG;XINHAI SONG~ 33:CN ~31:202011125816.9 ~32:20/10/2020

2023/05442 ~ Complete ~54:AZAQUINAZOLINE PAN-KRAS INHIBITORS ~71:MIRATI THERAPEUTICS, INC., 3545 Cray Court, United States of America ~72: KULYK, Svitlana;LAWSON, John David;MARX, Matthew Arnold;SMITH, Christopher Ronald;WANG, Xiaolun~ 33:US ~31:63/125,776 ~32:15/12/2020;33:US ~31:63/159,868 ~32:11/03/2021;33:US ~31:63/164,338 ~32:22/03/2021

2023/05429 ~ Complete ~54:ANTIBODY FOR TETANUS TOXIN AND USE THEREOF ~71:BEIJING WISDOMAB BIOTECHNOLOGY CO., LTD, Zhiren Meibo, 4th Floor, No.6, Third Taihe Street Yizhuang Economic And Technological Development Zone, Daxing District Beijing 100176, People's Republic of China;CHONGQING GENRIX BIOPHARMACEUTIAL CO., LTD., No.699, Maliu Avenue, Banan District, Chongqing, 401319, People's Republic of China;GENRIX (SHANGHAI) BIOPHARMACEUTICAL CO., LTD., 5/f, No. 581 Shenkuo Road, Zhang Jiang High-Tech Park, Pudong District, Shanghai, 201203, People's Republic of China ~72: JUNJIE HU;XIAOBO HAO;XIAOWEI ZHOU;YULAN LIU;ZHIGANG LIU~ 33:CN ~31:202011128926.0 ~32:21/10/2020

2023/05436 ~ Complete ~54:RENEWABLE HYDROCARBON COMPOSITION HAVING GOOD CETANE NUMBER AND GOOD COLD PROPERTIES ~71:Neste Oyj, Keilaranta 21, ESPOO 02150, FINLAND, Finland ~72: KIISKI, Ulla;KURONEN, Markku;NORTIO, Jenni;RUONAKANGAS, Anne~ 33:FI ~31:20206282 ~32:11/12/2020

2023/05441 ~ Complete ~54:METHODS OF MAKING A PPAR-DELTA AGONIST ~71:RENEO PHARMACEUTICALS, INC., 18575 Jamboree Road, Suite 275-S, United States of America ~72: WILLIAMS, Michael Trevelyan~ 33:US ~31:63/118,435 ~32:25/11/2020

2023/05413 ~ Complete ~54:MULTIPLE NETWORKS MONITOR ~71:PRECISION PLANTING LLC, 23207 Townline Road, Tremont, United States of America ~72: ALLGAIER, Ryan;WILCOXSON, David Aaron~ 33:US ~31:63/150,436 ~32:17/02/2021;33:US ~31:63/154,182 ~32:26/02/2021

2023/05420 ~ Complete ~54:COMPOUND BOTTLES ~71:SMITH, Kenton Oliver, Gouden Leeuw 515, 1103 KL, Amsterdam, Netherlands ~72: SMITH, Kenton Oliver~

2023/05427 ~ Complete ~54:METHOD FOR CONTROLLED PRETREATMENT AND/OR ENZYMATIC HYDROLYSIS OF A LIGNOCELLULOSIC MATERIAL ~71:SEKAB E-TECHNOLOGY AB, Box 286, 891 26, Örnsköldsvik, Sweden ~72: ADNAN CAVKA;ELIAS SUNDVALL~ 33:EP ~31:20213385.6 ~32:11/12/2020

2023/05437 ~ Complete ~54:MOULD AND METHOD FOR MOULDING DOUBLE CURVED ELEMENTS OF ELASTOMERIC MATERIAL ~71:Retyre AS, Glynitveien 27, SKI 1400, NORWAY, Norway ~72: AMUNDSEN, Paul Magne;HOFSET, Tarjei;MARVIK, Olaf Brage~ 33:NO ~31:20201223 ~32:12/11/2020

2023/05434 ~ Complete ~54:DEVICES, SYSTEMS, AND METHODS FOR ADJUSTING THE OUTPUT OF A REACTOR CORE ~71:Westinghouse Electric Company LLC, 1000 Westinghouse Drive, Suite 141, CRANBERRY TOWNSHIP 16066, PA, USA, United States of America ~72: ALESHIN, Yuriy;LEVINSKY, Alex~ 33:US ~31:17/084,365 ~32:29/10/2020

2023/05447 ~ Complete ~54:A DEVICE FOR MOUNTING A BARRELED WEAPON ~71:Susanna Dorathea Jansen, 25 Andries Pretorius Street, Sandbaai, South Africa ~72: Jacobus Marthinus Johannes Jansen~ 33:ZA ~31:2022/02007 ~32:17/02/2022

2023/05410 ~ Complete ~54:ULTRASONIC PROBE PROTECTIVE SLEEVE FOR ULTRASONIC EXAMINATION ~71:The Affiliated Hospital of Southwest Medical University, No.25,Taiping Road,Jiangyang, Luzhou, Sichuan, People's Republic of China ~72: FU Yong;GAO Yidan;LIAO Bin;LIAO Yuanyang;LIU Hui;LIU Lang;OUYANG Yaling;WAN Juyi~

2023/05416 ~ Complete ~54:ROLLER BEARING SEAL ASSEMBLY ~71:AMSTED RAIL COMPANY, INC., 311 South Wacker Drive, Suite 5300, United States of America ~72: LIEBE, Timothy M.~ 33:US ~31:17/100,259 ~32:20/11/2020

2023/05418 ~ Complete ~54:A MODULAR ELECTRICAL CONNECTING APPARATUS ~71:Roper, Jason Andrew, 5 Ascend to Midstream, 6 Rainbow Drive, South Africa ~72: Roper, Jason Andrew~ 33:ZA ~31:2021/00937 ~32:11/02/2021

2023/05424 ~ Complete ~54:ADAMTS13 VARIANT HAVING INCREASED ESCAPING RATE OR ACTIVITY AGAINST AUTOANTIBODY ~71:GREEN CROSS CORPORATION, 107, Ihyeon-ro 30beon-gil, Giheung-gu, Yongin-si, Gyeonggi-do, 16924, Republic of Korea ~72: CHAE MOK LEE;GAHEE CHOI;HEECHUN KWAK;HYUN-JA NAM;SEUNGHYUN JO;SUNG HO HWANG;SUNHYE SHIN;SUYONG KIM;YONGMIN LEE;YOUNG EUN KWON;YU YOUNG KIM~ 33:KR ~31:10-2020-0154710 ~32:18/11/2020

2023/05431 ~ Complete ~54:TRIAZOLOPYRIDINYL COMPOUNDS AS KINASE INHIBITORS ~71:Bristol-Myers Squibb Company, Route 206 and Province Line Road, PRINCETON 08543, NJ, USA, United States of America ~72: CHEN, Jie;DZIERBA, Carolyn Diane;FRENNESSON, David B.;GUO, Junqing;HART, Amy C.;HU, Xirui;LUO, Guanglin;MERTZMAN, Michael E.;PATTON, Matthew Reiser;SHI, Jianliang;SPERGEL, Steven H.;VENABLES, Brian Lee;WU, Yong-Jin;XIAO, Zili;YANG, Michael G.~ 33:US ~31:63/093,463 ~32:19/10/2020

2023/05396 ~ Provisional ~54:BIOMARKERS FOR MYCOBACTERIUM TUBERCULOSIS DETECTION ~71:KUNAMANDLA HEALTH SOLUTIONS (PTY) LTD, 60 Westmeath Avenue, Bonela, Durban, KwaZulu Natal, 4091, South Africa ~72: MICHELLE MAHARAJ~

2023/05409 ~ Complete ~54:RIDING LIMB TRAINING DEVICE AND REGULATION METHOD THEREOF ~71:DEZHOU UNIVERSITY, No. 566 University Rd., Decheng District, Dezhou, Shandong, 253000, People's Republic of China ~72: CUI, Sheng;LIU, Jiajin;WANG, Zebing;WANG, Zhikun;YAN, Wenning;YIN, Hao;ZHANG, Chengdong;ZHANG, Dechao;ZHAO, Yan~

2023/05415 ~ Complete ~54:DATA TRANSFER ~71:PRECISION PLANTING LLC, 23207 Townline Road, Tremont, United States of America ~72: ALLGAIER, Ryan;DUBERT, Norman;WILCOXSON, David Aaron~ 33:US ~31:63/150,445 ~32:17/02/2021;33:US ~31:63/154,231 ~32:26/02/2021

2023/05417 ~ Complete ~54:A CABLE GLAND ~71:CCG INTERNATIONAL HOLDINGS LIMITED, Bordage House, Le Bordage, ~72: MOOD, Geoffrey Ingles~ 33:GB ~31:2016528.8 ~32:19/10/2020;33:US ~31:17/073,810 ~32:19/10/2020

2023/05422 ~ Complete ~54:RAW MATERIAL FOR ANIMAL NUTRITION COMPRISING AN ORGANO-MINERAL COMPLEX CONTAINING DIETARY PHOSPHATE AND A HUMIC SUBSTANCE ~71:AGRO INNOVATION INTERNATIONAL, 18 Avenue, Franklin Roosevelt, 35400, Saint-Malo, France ~72: ANCA LUCIA LAZA KNOERR;AURIANNE DE TONNAC~ 33:FR ~31:FR2011320 ~32:04/11/2020

2023/05428 ~ Complete ~54:WEAR ASSEMBLY ~71:BRADKEN RESOURCES PTY LIMITED, 20 McIntosh Drive, Mayfield West, New South Wales, 2304, Australia ~72: ADAM SCRIVEN;CHRISTOPHER DAVID EDMONDS;TERRY L BRISCOE~ 33:AU ~31:2020903796 ~32:20/10/2020;33:AU ~31:2021901737 ~32:09/06/2021

2023/05432 ~ Complete ~54:MEDICINE FOR ALLEVIATING NEUROPATHIC PAIN ~71:Asahi Kasei Pharma Corporation, 1-1-2 Yurakucho, Chiyoda-Ku, TOKYO 1000006, JAPAN, Japan ~72: IMAI, Yosuke;YAMAMOTO, Hikaru~ 33:JP ~31:2020-199206 ~32:30/11/2020

2023/05438 ~ Complete ~54:METHODS OF TREATING DIABETES ~71:Eli Lilly and Company, LILLY CORPORATE CENTER, INDIANAPOLIS 46285, IN, USA, United States of America ~72: CARR, Molly Corbett;CHIEN, Yueh-Ling a/k/a Jenny Y. CHIEN;CHIGUTSA, Emmanuel;GARHYAN, Parag;HAUPT, Axel Richard Karl-August;TANG, Cheng Cai~ 33:US ~31:63/125,165 ~32:14/12/2020

2023/05407 ~ Complete ~54:TEMPERATURE CONTROLLED DU MERIDIAN MOXIBUSTION PAD ~71:Henan Provincial Hospital of Traditional Chinese Medicine (Second Affiliated Hospital of Henan University of Traditional Chinese Medicine), No. 6, Dongfeng Road, Jinshui District, Zhengzhou, People's Republic of China ~72: Chen Jianshe;Du Junge;Han Chunyan;Kong Meng;Li Hui;Sun Lili;Zhang Xinghua~

2023/05408 ~ Complete ~54:CONTINUOUS SAMPLING DRILL BIT ~71:LONGYEAR TM, INC., 2455 South 3600 West, United States of America ~72: CORONA, Robert Andrew;DRENTH, Christopher L.~ 33:US ~31:16/544,333 ~32:19/08/2019;33:US ~31:16/813,135 ~32:09/03/2020

2023/05412 ~ Complete ~54:ROW CLEANER PRESCRIPTION METHOD ~71:PRECISION PLANTING LLC, 23207 Townline Road, Tremont, United States of America ~72: LAWSON, Matthew;MILLER, Andrew P~ 33:US ~31:63/150,428 ~32:17/02/2021

2023/05419 ~ Complete ~54:CURRENCY CONVERSION SYSTEM AND METHOD ~71:Safe Take Cash (Pty) Ltd., 46 Mafunyane Street, South Africa ~72: VAN DER MERWE, Alwyn~ 33:ZA ~31:2020/05124 ~32:19/08/2020

2023/05423 ~ Complete ~54:FERTILIZING AND/OR SOIL CONDITIONING COMPOSITION INTENDED FOR CULTURE SUBSTRATES AND/OR CULTURE SOLUTIONS ~71:AGRO INNOVATION INTERNATIONAL, 18

Avenue, Franklin Roosevelt, 35400, Saint-Malo, France ~72: ANNE MAILLARD;JEAN-CLAUDE YVIN;JOSE MARIA GARCIA-MINA FREIRE;MUSTAPHA Y O ARKOUN;SYLVAIN PLUCHON~ 33:FR ~31:FR2012113 ~32:25/11/2020

2023/05435 ~ Complete ~54:WATER-SOLUBLE UNIT DOSE ARTICLE ~71:The Procter & Gamble Company, One Procter & Gamble Plaza, CINCINNATI 45202, OH, USA, United States of America ~72: COURCHAY, Florence Catherine;FRIEDICH, Steven G.;LABEQUE, Regine;LI, Shigeng;VITIELLO, Luca~ 33:EP ~31:20214147.9 ~32:15/12/2020

2023/05439 ~ Complete ~54:DUAL AMYLIN AND CALCITONIN RECEPTOR AGONISTS AND USES THEREOF ~71:Eli Lilly and Company, Lilly Corporate Center, INDIANAPOLIS 46285, IN, USA, United States of America;KeyBioScience AG, Langmattring 24, STANS CH-6370, SWITZERLAND, Switzerland ~72: ANDREASSEN, Kim Vietz;COSKUN, Tamer;HENRIKSEN, Kim;KARSDAL, Morten Asser;QU, Hongchang~ 33:US ~31:63/127,186 ~32:18/12/2020

. - APPLIED ON 2023/05/19 -

2023/05465 ~ Complete ~54:AN ASSEMBLY TYPE INTEGRATED PIPE CORRIDOR MANUFACTURING FIXING DEVICE ~71:Xinyu University, 2666 Sunshine Avenue, Gaoxin District, Xinyu City, Jiangxi Province, 338004, People's Republic of China ~72: Huang Ying;Li Jie;Wei Fang~ 33:CN ~31:2023105456363 ~32:15/05/2023

2023/05449 ~ Complete ~54:RICE PLANTING BOX ~71:Institute of Food Crops, Hainan Academy of Agricultural Sciences, No.14, Xingdan Road, Qiongshan District, Haikou, Hainan Province, 571100, People's Republic of China ~72: HAN, Yisheng;LI, Yixing;TANG, Qingjie;XING, Funeng;YAN, Xiaowei;ZHAI, Linan~ 33:CN ~31:2023100654724 ~32:16/01/2023

2023/05456 ~ Complete ~54:SAFETY SYSTEM ~71:RESCUE ONE EQUIPMENT (PTY) LTD, No. 20 Windemere Road, Lakeside Village, South Africa ~72: Nigel George WOODWARD~

2023/05466 ~ Complete ~54:METHOD FOR REMANUFACTURING INTERNAL SPLINE COMPONENTS ~71:CATERPILLAR INC., 100 NE Adams Street, United States of America ~72: JAYASINGHE, Chandima Surangie;STEINMETZ, Andrew D.~ 33:US ~31:17/101,463 ~32:23/11/2020

2023/05471 ~ Complete ~54:METHOD FOR INSTALLING A SET OF ELECTRONIC DETONATORS AND ASSOCIATED IGNITION METHOD ~71:DAVEY BICKFORD, Le Moulin Gaspard, 89550, Hery, France ~72: FRANCK GUYON;LOU DUMANOIR;RAPHAËL TROUSSELLE;STEPHANUS JOHANNES MARAIS COMBRINCK~ 33:FR ~31:FR2013388 ~32:17/12/2020

2023/05475 ~ Complete ~54:CRYSTALLINE FORMS OF 4-AMINO-N-[4-(METHOXYMETHYL)PHENYL]-7-(1-METHYLCYCLOPROPYL)-6-(3-MORPHOLINOPROP-1-YN-1-YL)-7H-PYRROLO[2,3-D]PYRIMIDINE-5-CARBOXAMIDE, METHODS OF PREPARATION, AND USES THEREOF ~71:Helsinn Healthcare SA, Via Pian Scairolo No. 9, LUGANO / PAZZALLO 6912, SWITZERLAND, Switzerland ~72: FRASCA, Gionata;FUMAGALLI, Tiziano;GIAFFREDA, Stefano Luca;IANNI, Cristina;MODENA, Enrico~ 33:US ~31:63/116,191 ~32:20/11/2020

2023/05455 ~ Complete ~54:COMPOSITE HARVESTING AND PRUNING METHOD FOR ZANTHOXYLUM BUNGEANUM ~71:Jintang Municipal Bureau of Agriculture and Rural Affairs, Zhaozhen Government Service Center, Jintang County, Chengdu City, Sichuan Province, 610400, People's Republic of China;Sichuan Academy of Forestry Sciences, No. 18, Xinghui West Road, Jinniu District, Chengdu City, Sichuan Province, 610084, People's Republic of China ~72: CHEN, Shanbo;CHEN, Wei;HUANG, Yang;LIU, Juan;LIU, Junli;LIU, Mao;LUO, Chengrong;WU, Wanbo;YANG, Zhiwu;YU, Lingfan~

2023/05462 ~ Complete ~54:A COMMUNICATION TOWER FAULT WARNING DEVICE ~71:Xinyu university, 2666 Sunshine Avenue, High-tech Zone, Xinyu City, Jiangxi Province, 338004, People's Republic of China ~72: Li Naigen;Peng Xiaojun~

2023/05467 ~ Complete ~54:INTEGRATION OF CARBON SEQUESTRATION WITH SELECTIVE HYDROMETALLURGICAL RECOVERY OF METAL VALUES ~71:NEGATIVE EMISSIONS MATERIALS, INC., 651 N Broad St, Suite 206 Middletown, New Castle, Delaware 19709, United States of America ~72: DREISINGER, David;LEY, Jeremy William~ 33:US ~31:63/118,677 ~32:26/11/2020

2023/05473 ~ Complete ~54:STRUCTURAL SHELL ~71:COEUS LIMITED, 8 St George's Street Douglas, Isle of Man, IM1 1AH, United Kingdom ~72: HENDRIK JOHANNES WATS~ 33:GB ~31:2017801.8 ~32:11/11/2020

2023/05479 ~ Complete ~54:PROCESS FOR PREPARING 7-CHLORO-6-FLUORO-1-(2-ISOPROPYL-4-METHYLPYRIDIN-3- YL)PYRIDOF[2,3-D]PYRIMIDINE-2,4(1H,3H)-DIONE ~71:Amgen Inc., One Amgen Center Drive, THOUSAND OAKS 91320-1799, CA, USA, United States of America ~72: ACHMATOWICZ, Michal;CORBETT, Michael T.;COYLER, John T.;GRIFFIN, Daniel J.;PARSONS, Andrew T.;QUASDORF, Kyle;ROBINSON, Joanna~ 33:US ~31:63/116,703 ~32:20/11/2020

2023/05482 ~ Complete ~54:ARYL DERIVATIVES FOR TREATING TRPM3 MEDIATED DISORDERS ~71:Katholieke Universiteit Leuven, KU Leuven R & D, Waaistraat 6, Box 5105, LEUVEN 3000, BELGIUM, Belgium ~72: ALLASIA, Sara;ARZEL, Philippe;CHALTIN, Patrick;KILONDA, Amuri;MARCHAND, Arnaud;REICH, Melanie;VANHERCK, Jean-Christophe;VOETS, Thomas;VRIENS, Joris;WELBERS, André~ 33:EP ~31:20209570.9 ~32:24/11/2020

2023/05451 ~ Complete ~54:SOYBEAN PLANTING AND FERTILIZATION ALL-IN-ONE MACHINE ~71:Hangzhou Shuiliang Vegetable Professional Cooperative, Jianying Village, Guali Town, Xiaoshan District, Hangzhou City, Zhejiang Province, 311241, People's Republic of China ~72: DING, Haiyong;FAN, Zhengwei;FANG, Jianfei;WANG, Jianming;ZHONG, Shuiliang;ZHONG, Yuting;ZHU, Shasha~ 33:CN ~31:202310535988.0 ~32:12/05/2023

2023/05472 ~ Complete ~54:SELF-REELING BELT DRIVE MECHANISM ~71:LIFTWAVE, INC. DBA RISE ROBOTICS, 1 Union Square Somerville, Massachusetts 02143, United States of America ~72: BLAKE SESSIONS;TOOMAS SEPP~ 33:US ~31:63/129,695 ~32:23/12/2020;33:US ~31:17/335,269 ~32:01/06/2021

2023/05481 ~ Complete ~54:WOUND CORE ~71:NIPPON STEEL CORPORATION, 6-1, Marunouchi 2-chome, Chiyoda-ku, TOKYO 100-8071, JAPAN, Japan ~72: ARAI , Satoshi;ARAMAKI , Takeo;KUNITA , Yuki;USHIGAMI , Yoshiyuki;YAMAMOTO, Shinji~ 33:JP ~31:2020-178900 ~32:26/10/2020

2023/05446 ~ Provisional ~54:FORENSIC INFORMATION MANAGEMENT SYSTEM ~71:Kholiwe Collins Skosana, 6517 Wilde Amandel Street Magaliesburg country estate 2, amandasig extension 44, South Africa;Thabiso Tony Malete, 14 Okapi Street Elandsrand, South Africa ~72: Thabiso Tony Malete~

2023/05459 ~ Complete ~54:PROCESS FOR PRODUCING HERBICIDE AND INTERMEDIATE THEREOF ~71:KUMIAI CHEMICAL INDUSTRY CO., LTD., 4-26, Ikenohata 1-chome Taito-ku, Tokyo, 1108782, Japan ~72: ARNOTT CAOIMHIN;KOJI OKADA;NAOYA ATSUMI;SHINKI TANI;YUKIO UCHIDA;YUTA MURAI~ 33:JP ~31:2019-198600 ~32:31/10/2019

2023/05460 ~ Complete ~54:METHYLOBACTERIUM SP. VOV. STRAIN, COMPOSITIONS COMPRISING IT, AND ITS USE AS BIO-STIMULANT AND ENDOPHYTE NITROGEN-FIXING BACTERIUM ~71:SYMBORG, SL, Campus de Espinardo 7, Edificio CEEIM, 30100, Murcia, Spain ~72: ANA VILA MARTÍNEZ;ANTONIO

JOSÉ BERNABÉ GARCÍA;FELIX FERNÁNDEZ MARTÍN;FRANCISCO JOSÉ CARMONA ÁLVAREZ;JESÚS JUÁREZ MOLINA;ROCÍO TORRES VERA~ 33:EP ~31:19382457.0 ~32:03/06/2019

2023/05463 ~ Complete ~54:AN ELECTRICAL AUTOMATION TEACHING SIMULATION CONTROL CABINET ~71:Jiangsu College Of Safety Technology, No.1 Yucai Road, Jiawang District, Xuzhou City, Jiangsu Province, 221000, People's Republic of China ~72: Li Qiang~ 33:CN ~31:2023105257092 ~32:11/05/2023

2023/05470 ~ Complete ~54:REMOVING IMPURITIES FROM AN ELECTROLYTE ~71:ELYSIS LIMITED PARTNERSHIP, 1 Place Ville Marie, Suite #2323 Montreal, Canada ~72: D'ASTOLFO, Leroy;FORS, John;LIU, Xinghua;MACKEY, Allen George;MICKELSON, Larry~ 33:US ~31:63/117,483 ~32:24/11/2020

2023/05474 ~ Complete ~54:AUSTENITIC STAINLESS STEEL ~71:OUTOKUMPU OYJ, Salmisaarenranta 11, Helsinki, 00180, Finland ~72: MARIE LOUISE FALKLAND;RUI WU~ 33:EP ~31:20206232.9 ~32:06/11/2020

2023/05454 ~ Complete ~54:PLANNING LAYOUT METHOD AND SYSTEM FOR URBAN GREEN ROOFS ~71:Beijing Normal University, No.19, Xinjiekouwai St., Haidian District, Beijing, 100875, People's Republic of China ~72: LIU, Gengyuan;MENG, Fanxin;YANG, Zhifeng;YUAN, Qiuling~ 33:CN ~31:2023101384192 ~32:14/02/2023

2023/05453 ~ Complete ~54:METHOD FOR RAPIDLY EXTRACTING VITAMIN E FROM GREEN PLANT LEAVES ~71:Chongqing Sericulture Science and Technology Research Institute, No.1, Shangba Road, Dongyang Street, Beibei District, Chongqing, 400799, People's Republic of China ~72: GAO, Liang;HUANG, Chuanshu;LI, Shuo;LIU, Yan;LUO, Taiming;SHEN, Lunfu;SONG, Changgui;SONG, Zhiguang;TANG, Lu;YANG, Biwen;YANG, Ting~

2023/05458 ~ Complete ~54:PROCESS FOR PRODUCING HERBICIDE AND INTERMEDIATE THEREOF ~71:KUMIAI CHEMICAL INDUSTRY CO., LTD., 4-26, Ikenohata 1-chome Taito-ku, Tokyo, 1108782, Japan ~72: ARNOTT CAOIMHIN;KOJI OKADA;NAOYA ATSUMI;SHINKI TANI;YUKIO UCHIDA;YUTA MURAI~ 33:JP ~31:2019-198600 ~32:31/10/2019

2023/05468 ~ Complete ~54:METHOD OF GNSS MULTIPATH ERROR MITIGATION FOR DYNAMIC CARRIER PLATFORM ~71:NANJING BEIDOU INNOVATION AND APPLIED TECHNOLOGY RESEARCH INSTITUTE CO.,LTD., No.8,Huyue East Road,LongchiStreet,Liuhe District, Nanjing, Jiangsu, 211500, People's Republic of China ~72: Ling TANG;Xuan ZOU;Zhiqiang DU~ 33:CN ~31:202210375848.7 ~32:11/04/2022

2023/05477 ~ Complete ~54:A METHOD FOR EDGE-FORMING CELLULOSE PRODUCTS IN A FORMING MOULD SYSTEM, AND A FORMING MOULD SYSTEM FOR FORMING EDGES OF CELLULOSE PRODUCTS ~71:PulPac AB, Amalia Jönssons gata 16, VÄSTRA FRÖLUNDA 421 31 , SWEDEN, Sweden ~72: BERGFJORD, Mathias;LJUNGBERG, Martin~ 33:EP ~31:20205198.3 ~32:02/11/2020

2023/05484 ~ Complete ~54:INSTRUMENT FOR MEASURING THE FORCE FOR SPREADING A PASTE ~71:Saint-Gobain Placo, Tour Saint-Gobain, 12 Place de l'Iris, COURBEVOIE 92400, FRANCE, France;Saint-Gobain Weber France, 2/4 Rue Marco Polo, SUCY-EN-BRIE 94370, FRANCE, France ~72: ARANGALAGE, Mélanie;BEAUMONT, Julien;CARDOSO DA SILVA, Luis;LEIVA MUNOZ, Raül~ 33:FR ~31:2012470 ~32:01/12/2020

2023/05461 ~ Complete ~54:APPLICATION OF TOBACCO TRANSCRIPTION FACTOR NTHB6 ~71:GUIZHOU TOBACCO SCIENCE RESEARCH INSTITUTE, No. 29, Longtanba Road, Guanshanhu District, Guiyang City, Guiyang City, Guizhou Province, 550081, People's Republic of China ~72: BING WANG;BO LEI;CAIRUI

CHEN;CHAOYING JIANG;CHUANFANG WAN;HUINA ZHAO;JIE ZHANG;JING YU;KAI CAI;KAI ZHANG;SHIXI LI~ 33:CN ~31:2022111571769 ~32:22/09/2022

2023/05478 ~ Complete ~54:BROADLY NEUTRALIZING ANTIBODIES AGAINST INFLUENZA NEURAMINIDASE ~71:Humabs BioMed SA, Via dei Gaggini 3, BELLINZONA 6500, SWITZERLAND, Switzerland;Vir Biotechnology, Inc., 499 Illinois Street, Suite 500, SAN FRANCISCO 94158, CA, USA, United States of America ~72: CAMERONI, Elisabetta;CORTI, Davide;FERRI, Elena;MINOLA, Andrea;PIZZUTO, Matteo Samuele;SNELL, Gyorgy~ 33:US ~31:63/117,448 ~32:23/11/2020;33:US ~31:63/123,424 ~32:09/12/2020;33:US ~31:63/197,160 ~32:04/06/2021;33:US ~31:63/261,463 ~32:21/09/2021

2023/05483 ~ Complete ~54:METHODS FOR THE DETECTION OF ANTI-DRUG ANTIBODIES AGAINST FACTOR XI AND/OR FACTOR XIA ANTIBODIES ~71:Anthos Therapeutics, Inc., 55 Cambridge Parkway, CAMBRIDGE 02142, MA, USA, United States of America ~72: BLOOMFIELD, Daniel M.;FREEDHOLM, Debra A.;FREEMAN, Jonathan E.;GLASSPOOL, Royston J.;KHDER, Yasser~ 33:US ~31:63/127,536 ~32:18/12/2020

2023/05457 ~ Complete ~54:PROCESS FOR PRODUCING HERBICIDE AND INTERMEDIATE THEREOF ~71:KUMIAI CHEMICAL INDUSTRY CO., LTD., 4-26, Ikenohata 1-chome Taito-ku, Tokyo, 1108782, Japan ~72: ARNOTT CAOIMHIN;KOJI OKADA;NAOYA ATSUMI;SHINKI TANI;YUKIO UCHIDA;YUTA MURAI~ 33:JP ~31:2019-198600 ~32:31/10/2019

2023/05480 ~ Complete ~54:DRY SHAMPOO COMPOSITION ~71:Firmenich SA, 7, Rue de la Bergère, SATIGNY 1242, SWITZERLAND, Switzerland ~72: LEDERREY, Pauline;VERHOVNIK, Glenn~ 33:EP ~31:20211529.1 ~32:03/12/2020

2023/05452 ~ Complete ~54:SYSTEM AND METHOD FOR DETECTION OF KIDNEY DISORDERS ~71:Dr. Chandraprabha Manjare, Laxmi Vilas, Mukundnagar, Pune, MAHARASHTRA, 411037, India;Dr. Kaustubh Manikrao Gaikwad, E&TC department, Sinhgad Academy of Engineering, Kondhwa, Pune, MAHARASHTRA, 411048, India;Dr. Mrinal Rahul Bachute, J603 Metropolitan Housing society, Chinchwad, Pune, MAHARASHTRA, 411033, India;Dr. Sharad Tukaram Jadhav, Sharad Institute of Technology College of Engineering, Yadrav, Ichalkaranji, MAHARASHTRA, 416146, India;Dr. Vinayak Bairagi, AISSMS Institute of Information Technology, Kennedy Road, Near RTO, Pune, MAHARASHTRA, 411001, India ~72: Dr. Chandraprabha Manjare;Dr. Kaustubh Manikrao Gaikwad;Dr. Mrinal Rahul Bachute;Dr. Sharad Tukaram Jadhav;Dr. Vinayak Bairagi~

2023/05464 ~ Complete ~54:A PROTECTIVE BRACKET FOR BUILDING CONSTRUCTION ~71:Xinyu University, 2666 Sunshine Avenue, Gaoxin District, Xinyu City, Jiangxi Province, 338000, People's Republic of China ~72: Gan Yilan;Hua Genyong~ 33:CN ~31:2023104805935 ~32:28/04/2023

2023/05469 ~ Complete ~54:CONTROLLING ELECTRODE CURRENT DENSITY OF AN ELECTROLYTIC CELL ~71:ELYSIS LIMITED PARTNERSHIP, 1 Place Ville Marie, Suite #2323 Montreal, Canada ~72: D'ASTOLFO, Leroy;MICKELSON, Larry;RUAN, Yimin~ 33:US ~31:63/118,774 ~32:27/11/2020

2023/05476 ~ Complete ~54:GLOBO SERIES ANTIGENS-BINDING CHIMERIC ANTIGEN RECEPTORS AND USES THEREOF ~71:OBI Pharma, Inc., 19F., No.3, Yuanqu St., Nangang Dist., TAIPEI CITY 115 , TAIWAN (R.O.C.), Taiwan, Province of China ~72: CHAN, Woan-Eng;JIAN, Shiou-Ling;LAI, Jiann-Shiun;LAI, Ming-Tain;YU, Jhang-Sian~ 33:US ~31:63/147,237 ~32:09/02/2021;33:US ~31:63/147,441 ~32:09/02/2021

2023/05445 ~ Provisional ~54:A BATTERY CHARGING SYSTEM ~71:LEIBRANDT, Stephen, Johannes, 1175 MARKET STREET, BOOYSENS, PRETORIA, 0082, South Africa ~72: LEIBRANDT, Stephen, Johannes~

2023/05448 ~ Complete ~54:IDENTIFICATION METHOD AND APPARATUS BASED ON ARTIFICIAL INTELLIGENCE, ELECTRONIC DEVICE, AND STORAGE MEDIUM ~71:Hebei Chemical and Pharmaceutical College, No. 88, Fangxing Road, Yuhua District, Shijiazhuang City, Hebei Province, 050026, People's Republic of China ~72: LIU, Chenguang~

2023/05450 ~ Complete ~54:OPTIMAL CONTROL METHOD OF POLLUTANT FLUX INTO COASTAL WATERS BASED ON VIRTUAL DISCHARGE AMOUNT ~71:FIRST INSTITUTE OF OCEANOGRAPHY, MINISTRY OF NATURAL RESOURCES, No.6 Xianxialing Road,Laoshan District, Qingdao City, Shandong Province, People's Republic of China ~72: HUANG Pei;SHI Honghua;WANG Yongzhi;ZHENG Wei~ 33:CN ~31:202211609077X ~32:15/12/2022

. - APPLIED ON 2023/05/22 -

2023/05496 ~ Complete ~54:AN INTERACTIVE MULTIMEDIA DEVICE FOR INNOVATION AND ENTREPRENEURSHIP EDUCATION ~71:Xinyu University, 2666 Sunshine Avenue, Gaoxin District, Xinyu City, Jiangxi Province, 338000, People's Republic of China ~72: Gan Yilan;Hua Genyong~ 33:CN ~31:2023104805333 ~32:28/04/2023

2023/05501 ~ Complete ~54:METHOD FOR CAPTURING SILICON AT LOW HOURLY SPACE VELOCITY ~71:IFP ENERGIES NOUVELLES, 1 et 4 avenue de Bois-Préau, France ~72: BARTHELET, Karin;LEGAGNEUX, Nicolas;MARION, Marie-Claire~ 33:FR ~31:FR2013848 ~32:21/12/2020

2023/05506 ~ Complete ~54:ORALLY DISINTEGRATING TABLET COMPRISING BENZIMIDAZOLE DERIVATIVE COMPOUND AND PREPARATION METHOD THEREOF ~71:HK INNO.N CORPORATION, 239 Osongsaengmyeong 2-ro, Osong-eup, Heungdeok-gu, Cheongju-si, Chungcheongbuk-do, 28158, Republic of Korea ~72: DA SOM LIM;EUN KYUNG JEON;MIN JUNG KIM;SUN YOUNG PARK;TAE KEUN CHO;YOUNG DAE CHO~ 33:KR ~31:10-2020-0138712 ~32:23/10/2020

2023/05511 ~ Complete ~54:SYSTEMS AND METHODS FOR DETERMINING WATER DEPTH AND EXPLOSIVE DEPTH IN BLASTHOLES ~71:DYNO NOBEL ASIA PACIFIC PTY LIMITED, Level 8 28 Freshwater Place, Southbank, Victoria, 3006, Australia ~72: JOHN MYERS;PAUL TERRY~ 33:AU ~31:2020904099 ~32:10/11/2020

2023/05527 ~ Complete ~54:METHODS AND SYSTEMS FOR DETERMINING A TIME OF DEATH ~71:UNIVERSITY OF CAPE TOWN, Lovers Walk, Rondebosch, South Africa ~72: MFOLOZI, Sipho~ 33:GB ~31:2016836.5 ~32:23/10/2020

2023/05498 ~ Complete ~54:APPLICATION OF DEXMEDETOMIDINE IN PREPARATION OF DRUGS FOR TREATING MUSCLE TISSUE INFLAMMATION ~71:FIRST AFFILIATED HOSPITAL OF XINJIANG MEDICAL UNIVERSITY, No.137 Liyushan South Road, Xinshi District, Urumqi City, Xinjiang Uygur Autonomous Region, 830011, People's Republic of China ~72: CHEN, Siyu;DENG, Li;GAO, Rui;LI, Aimei;MA, Yan~ 33:CN ~31:202310073255.X ~32:07/02/2023

2023/05509 ~ Complete ~54:COMPRESSED-AIR ENGINE WITH INTEGRATED ACTIVE CHAMBER AND ACTIVE DISTRIBUTION WITH BALANCED VALVE ~71:MOTOR DEVELOPMENT INTERNATIONAL S.A., 17 rue des Bains, Luxembourg, 1212, Luxembourg ~72: CHRISTOPHE HURTH;CYRIL NEGRE~

2023/05523 ~ Complete ~54:1-(PYRIDYL)-5-AZINYLPYRAZOLE DERIVATIVES, AND THEIR USE FOR CONTROL OF UNDESIRED PLANT GROWTH ~71:Bayer Aktiengesellschaft, Kaiser-Wilhelm-Allee 1, LEVERKUSEN 51373, GERMANY, Germany ~72: BOLLENBACH-WAHL, Birgit;BUSCATO , Estella;DITTGEN,

Jan;GATZWEILER, Elmar;HOFFMANN, Michael Gerhard;JAKOBI, Harald;MUELLER, Thomas;REINGRUBER, Anna Maria~ 33:EP ~31:20203487.2 ~32:23/10/2020

2023/05489 ~ Provisional ~54:FENCE DROPPER ~71:Paratrak (Pty)Ltd, 325 Waterfall Hills Estate, South Africa ~72: Richard Roy Wood, Roy Canstant Wood, Alistair Alerdyce Elrick~

2023/05490 ~ Complete ~54:LASER COMBINED POLISHING DEVICE FOR METAL 3D PRINTED PARTS ~71:SHENZHEN INSTITUTE OF INFORMATION TECHNOLOGY, NO.2188, Longxiang Avenue, Longcheng Street, Longgang District, Shenzhen, Guangdong, 518000, People's Republic of China ~72: XIAO Haibing;ZHANG Yunsheng;ZHOU Yongquan~

2023/05493 ~ Complete ~54:MIST INHALER DEVICES ~71:SHAHEEN INNOVATIONS HOLDING LIMITED, Unit 2, Level 7, Al Sila Tower, Abu Dhabi Global Market Square, Al Maryah Island, Abu Dhabi, United Arab Emirates ~72: CLEMENT LAMOUREUX;IMAD LAHOUD;JEFF MACHOVEC;MOHAMMED ALSHAIBA SALEH GHANNAM ALMAZROUEI;SAJID BHATTI~ 33:IB ~31:PCT/IB2019/060808 ~32:15/12/2019;33:IB ~31:PCT/IB2019/060810 ~32:15/12/2019;33:IB ~31:PCT/IB2019/060811 ~32:15/12/2019;33:IB ~31:PCT/IB2019/060812 ~32:15/12/2019;33:EP ~31:20168231.7 ~32:06/04/2020;33:EP ~31:20168245.7 ~32:06/04/2020;33:EP ~31:20168938.7 ~32:09/04/2020

2023/05521 ~ Complete ~54:A BEVERAGE DISPENSING APPARATUS ~71:Hodges & Drake Design Ltd, 27 York Road, LEICESTER LE1 5TT, LEICESTERSHIRE, UNITED KINGDOM, United Kingdom ~72: JONES, Craig;WHATELEY, Tim~ 33:GB ~31:2017357.1 ~32:02/11/2020;33:GB ~31:2019898.2 ~32:16/12/2020

2023/05495 ~ Complete ~54:SYSTEM FOR DETECTING SHORT CIRCUIT POINT OF HIGH-VOLTAGE ALTERNATING-CURRENT TRANSMISSION CABLE ~71:Anhui Polytechnic University, No.8 Beijing Load Jiujiang District, Wuhu City, Anhui Province, People's Republic of China ~72: Huang yiqing;Jiang ming;Lu huacai;Xu gang;Ye xin;Yuan yiming;Zhu caojun~

2023/05502 ~ Complete ~54:POLYNUCLEOTIDES, COMPOSITIONS, AND METHODS FOR GENOME EDITING INVOLVING DEAMINATION ~71:INTELLIA THERAPEUTICS, INC., 40 Erie Street, Cambridge, United States of America ~72: DOMBROWSKI, Christian;HARRINGTON, William, Frederick;OLIVEIRA, Ruan~ 33:US ~31:63/124,060 ~32:11/12/2020;33:US ~31:63/130,104 ~32:23/12/2020;33:US ~31:63/165,636 ~32:24/03/2021;33:US ~31:63/275,424 ~32:03/11/2021

2023/05504 ~ Complete ~54:IMPROVED METHOD FOR RECYCLING PET BY ALCOHOLYSIS ~71:RECYC'ELIT, 608 CHEMIN DE L'ISLON, 38670 CHASSE-SUR-RHÔNE, FRANCE, France ~72: MEDIMAGH, Raouf~ 33:FR ~31:2012085 ~32:24/11/2020

2023/05510 ~ Complete ~54:FILTER PRESS LOCKING MEANS ~71:METSO OUTOTEC FINLAND OY, PL 306, Tampere, 33101, Finland ~72: HUAN YAN;MIKA ILLI;ZHIHONG LI~ 33:CN ~31:202011618687.7 ~32:31/12/2020

2023/05518 ~ Complete ~54:METHODS OF TREATING BREAST CANCER WITH TETRAHYDRONAPHTHALENE DERIVATIVES AS ESTROGEN RECEPTOR DEGRADERS ~71:Arvinas Operations, Inc., 5 Science Park, 395 Winchester Avenue, NEW HAVEN 06511, CT, USA, United States of America ~72: CHEN, Xin;CREW, Andrew P.;FLANAGAN, John;GOUGH, Sheryl Maxine;HASKELL, III, Royal J.;MOORE, Marcia Dougan;QIAN, Yimin;TAYLOR, Ian Charles Anthony;WANG, Jing~ 33:US ~31:63/125,371 ~32:14/12/2020

2023/05522 ~ Complete ~54:HER2 TARGETING AGENT ~71:Ono Pharmaceutical Co., Ltd., 1-5, Doshomachi 2-chome, Chuo-ku, OSAKA-SHI 5418526, OSAKA, JAPAN, Japan;Tohoku University, 1-1, Katahira 2-chome,

Aoba-ku, SENDAI-SHI 9808577, MIYAGI, JAPAN, Japan ~72: KANEKO, Mika;KATO, Yukinari;KUROGI, Masayuki;NAKAYAMA, Daisuke~ 33:JP ~31:2020-198044 ~32:30/11/2020;33:JP ~31:2021-110912 ~32:02/07/2021

2023/05524 ~ Complete ~54:MOON PHASE DISPLAY ~71:QLOCKTWO License GmbH, Goethestraße 29, SCHWÄBISCH GMÜND 73525 , GERMANY, Germany ~72: BIEGERT, Marco;FUNK, Andreas~ 33:EP ~31:20215658.4 ~32:18/12/2020

2023/05529 ~ Complete ~54:FILTER INTERLOCK WITH TABS MATING WITH A PEDESTAL OR A HOUSING ~71:CATERPILLAR INC., 100 NE Adams Street, United States of America ~72: IMMEL, Jon T.;MOREHOUSE III, Darrell L.;OEDEWALDT, Stephen E.;RIES, Jeffrey R.~ 33:US ~31:17/102,831 ~32:24/11/2020

2023/05499 ~ Complete ~54:INTRANASAL SUSTAINED RELEASE ADMINISTRATION DEVICE FOR PATIENTS CONTRACTING NASOPHARYNGEAL CARCINOMA ~71:INNER MONGOLIA MEDICAL UNIVERSITY, Jinshan Development Zone, Hohhot, Inner Mongolia, People's Republic of China ~72: LI, Xinhong;YANG, Xinglong;ZHANG, Jihong;ZHAO, Pengwei~ 33:CN ~31:202223531081.7 ~32:29/12/2022

2023/05508 ~ Complete ~54:BRM TARGETING COMPOUNDS AND ASSOCIATED METHODS OF USE ~71:PRELUDE THERAPEUTICS, INCORPORATED, 200 Powder Mill Road, Experimental Station E440/3213, Wilmington, Delaware, 19803, United States of America ~72: ANDREW PAUL COMBS;CHAOFENG DAI;COREY HOWARD BASCH;DANIELLE JULIE BEAM ROTH;JOHN A ROSE;KLARE LAZOR BERSCH;LIANG LU;RUPA SHETTY;SONG MEI~ 33:US ~31:63/110,688 ~32:06/11/2020

2023/05514 ~ Complete ~54:PEPTIDES AND CONJUGATES THEREOF AS ACE-2 AND S1 SUBUNIT MIMICS AGAINST SEVERE ACUTE RESPIRATORY SYNDROME CORONAVIRUS-2 (SARS-COV2) INFECTION ~71:NEUOME PEPTIDES PTE. LTD., 71 Ayer Rajah Crescent, #03-04/05, 139951, Singapore ~72: VANGALA, Rajanikanth~ 33:IN ~31:202041042101 ~32:28/10/2020

2023/05525 ~ Complete ~54:METHOD AND DEVICE FOR GENERATING WATER QUALITY REPORT BASED ON DISTRIBUTED NODES, ELECTRONIC DEVICE, AND STORAGE MEDIUM ~71:LONGSE TECHNOLOGY CO., LTD., Building 2, No.18, Dongming 3rd road, Huangpu District, People's Republic of China ~72: CHEN, Xiaoyan;LIANG, Shaoling;LIN, Ge;QUAN, Shaojun~ 33:CN ~31:202111219181.3 ~32:20/10/2021

2023/05486 ~ Provisional ~54:THE INDEPENDENCE OF STATES - ADE VAN HEERDEN "SHE BELIEVES IN ME". I HAVE A DREAM. ORANJE VRYSTAAT GESKIEDENIS. ~71:Amram Micaih Mofomme, 888 Block C, Mabopane, South Africa ~72: Amram Micaih Mofomme~ 33:EP ~31:1 ~32:21/11/2022;33:OA ~31:1 ~32:21/11/2022;33:WO ~31:1 ~32:21/11/2022

2023/05488 ~ Provisional ~54:FENCE DROPPER ~71:Paratrak (Pty)Ltd, 325 Waterfall Hills Estate, South Africa ~72: Richard Roy Wood, Roy Canstant Wood, Alistair Alerdyce Elrick~

2023/05500 ~ Complete ~54:CFTR MODULATOR COMPOUNDS, COMPOSITIONS, AND USES THEREOF ~71:ILDONG PHARMACEUTICAL CO., LTD., 2, BAUMOE-RO 27-GIL, SEOCHO-GU, SEOUL 06752, REPUBLIC OF KOREA, Republic of Korea ~72: AN, Kyung Mi;JEONG, Ilji;JUN, Yearin;KIM, Gunhee;KIM, Jungho;KIM, Kyeong-a;KWON, Jinsun;LEE, Jin Hee;LEE, Jooyun;LEE, Jung Woo;LEE, Myongjae;LEE, Seolhee;LIM, Dami;OH, Changmok;PARK, Joontae;RYU, Jaeeun;SOHN, Te-ik;YOON, Hongchul;YOON, Jongmin~ 33:US ~31:63/104,979 ~32:23/10/2020

2023/05505 ~ Complete ~54:A SYSTEM FOR SECURE TRANSACTION PROCESSING AND A METHOD THEREOF ~71:AGASHE, Mandar, 242, Chandrashekhar,, Shaniwar Peth,, India ~72: AGASHE, Mandar~ 33:IN ~31:202121060001 ~32:22/12/2021

2023/05520 ~ Complete ~54:CONJUGATED T-2 TOXIN TO PROTECT AGAINST MYCOTOXICOSIS ~71:Intervet International B.V., Wim de Körverstraat 35, BOXMEER 5831 AN, THE NETHERLANDS, Netherlands ~72: KOOIJMAN, Sietske;SEGERS, Ruud Philip Antoon Maria;WITVLIET, Maarten Hendrik~ 33:EP ~31:20216338.2 ~32:22/12/2020

2023/05530 ~ Complete ~54:FUEL FILTER PASSAGE FOR DOWNWARD FUEL FLOW DIRECTION ~71:CATERPILLAR INC., 100 NE Adams Street, United States of America ~72: BURCAR, Quinton Marcus;IMMEL, Jon T.;MOREHOUSE III, Darrell L.;OEDEWALDT, Stephen Ellis;RIES, Jeffrey R.;SUTTON, Brian J.~ 33:US ~31:17/102,631 ~32:24/11/2020

2023/05487 ~ Provisional ~54:CONNECTOR ASSEMBLY ~71:HUBBLE LITHIUM (PTY) LTD, 93 Oakland Hill Road, Parklands North, South Africa ~72: DE LANGE, Cornelius~

2023/05491 ~ Complete ~54:ACRYLATE-OLEFIN COPOLYMERS AS HIGH VISCOSITY BASE FLUIDS ~71:EVONIK OPERATIONS GMBH, RELLINGHAUSER STRASSE 1-11, 45128 ESSEN, GERMANY, Germany ~72: BABIK, Sebastian;GROß-ONNEBRINK, Yvonne;HILF, Stefan;JANßEN, Dieter;KLEINSCHMIDT, Denise;MAIER, Stefan, Karl;NOTHDURFT, Katja;PLETSCH, Holger;SCHWEIßINGER, Emily, Clare~ 33:EP ~31:EP22174980 ~32:24/05/2022

2023/05513 ~ Complete ~54:COMPOSITIONS AND METHODS FOR REDUCING MHC CLASS II IN A CELL ~71:INTELLIA THERAPEUTICS, INC., 40 Erie Street, Cambridge, United States of America ~72: GOEL, Surbhi;HARRINGTON, William Frederick;SRIDHAR, Srijani;ZHANG, Yong~ 33:US ~31:63/124,064 ~32:11/12/2020;33:US ~31:63/130,106 ~32:23/12/2020

2023/05492 ~ Complete ~54:SUB-MICRON 4A-TYPE MOLECULAR SIEVE AND PREPARATION METHOD THEREOF ~71:Shanghai University, No. 99, Shangda Road, Baoshan District, Shanghai, 200444, People's Republic of China ~72: BU, Naijing;ZHEN, Qiang~

2023/05515 ~ Complete ~54:INCREASED PACKAGING EFFICIENCY OF VECTOR FOR CARDIAC GENE THERAPY ~71:University of Florida Research Foundation, Incorporated, 223 Grinter Hall, GAINESVILLE 32611, FL, USA, United States of America ~72: SWEENEY, Hugh Lee~ 33:US ~31:63/130,109 ~32:23/12/2020

2023/05517 ~ Complete ~54:TRICYCLIC CARBOXAMIDE DERIVATIVES AS PRMT5 INHIBITORS ~71:Amgen Inc., One Amgen Center Drive, THOUSAND OAKS 91320-1799, CA, USA, United States of America ~72: AMEGADZIE, Albert;BEYLKIN, Diane Jennifer;BOOKER, Shon;BOURBEAU, Matthew Paul;BUTLER, John R.;GLAD, Sanne Omholt Schroder;KOHN, Todd J.;LANMAN, Brian Alan;LI, Kexue;LIU, Qingyian;LOPEZ, Patricia;MANONI, Francesco;NAVARATNE, Primali Vasundera;PETTUS, Liping H.;RAHIMOFF, Rene;TAMAYO, Nuria A.;VESTERGAARD, Mikkel;WANG, Hui-Ling;WEIRES, Nicholas Anthony~ 33:US ~31:63/117,937 ~32:24/11/2020

2023/05546 ~ Complete ~54:BACTERIA BASED PROTEIN DELIVERY ~71:T3 PHARMACEUTICALS AG, HEGENHEIMERMATTWEG 167A, 4123 ALLSCHWIL, SWITZERLAND, Switzerland ~72: AMSTUTZ, Marlise;DICK, Mathias, S.;ITTIG, Simon;KASPER, Christoph;SAUPE, Falk~ 33:EP ~31:20204007.7 ~32:27/10/2020

2023/05516 ~ Complete ~54:MINING MACHINE AND METHOD FOR CONTROLLING MOVEMENT OF A MOVABLE ELEMENT OF A MINING MACHINE ~71:Sandvik Mining and Construction G.m.b.H., Alpinestrasse 1, ZELTWEG 8740, AUSTRIA, Austria ~72: GIMPEL, Martin;OFFENBACHER, Michael;POGATSCHNIGG, Reinhold~ 33:EP ~31:21154175.0 ~32:29/01/2021

2023/05485 ~ Provisional ~54:THE INDEPENDENCE OF STATES - ADE VAN HEERDEN "SHE BELIEVES IN ME". I HAVE A DREAM. ORANJE VRYSTAAT GESKIEDENIS. ~71:Amram Micaih Mofomme, 888 Block C, Mabopane, South Africa ~72: Amram Micaih Mofomme~ 33:EP ~31:1 ~32:21/11/2022;33:OA ~31:1 ~32:21/11/2022;33:WO ~31:1 ~32:21/11/2022

2023/05497 ~ Complete ~54:SYSTEM AND METHOD FOR STOCK MARKET PREDICTION USING INFLUENCE OF EXTENDED SOCIAL MOOD INDEX ~71:Dhamotharan Dhanasekar, Ph.D. Research Scholar in Management, Bharathidasan University, Tiruchirappalli, Tamil Nadu, India;Dr. Murugesan Selvam, Professor, Department of Commerce and Financial Studies, Bharathidasan University, Tiruchirappalli, Tamil Nadu, India;Dr. S. Balakrishnan, Assistant Professor, Department of Business Administration, Nizwa College of Applied Sciences, University of Technology and Applied Sciences (UTAS), P.O. Box 699, P C 611, Nizwa Sultanate of Oman, Oman;Dr. S. Mohan, Principal, S.K.S.S Arts College, Tiruppanandal, Kumbakonam, Tamil Nadu, India;Sakthivel Santhoshkumar, Ph.D. Research Scholar in Commerce Inter- disciplinary in Management, Bharathidasan University, Tiruchirappalli, Tamil Nadu, India ~72: Dhamotharan Dhanasekar;Dr. Murugesan Selvam;Dr. S. Balakrishnan;Dr. S. Mohan;Sakthivel Santhoshkumar~

2023/05512 ~ Complete ~54:SPACE EFFICIENT OPTICAL FIBER TRAY ORGANIZER FOR A TELECOMMUNICATIONS CLOSURE ~71:COMMSCOPE TECHNOLOGIES LLC, 1100 CommScope Place SE, Hickory, North Carolina, 28602, United States of America ~72: BART MATTIE CLAESSENS;EL MOÏZ MOHAMMED MICHEL GHAMMAM~ 33:US ~31:63/107,497 ~32:30/10/2020;33:US ~31:63/160,118 ~32:12/03/2021

2023/05519 ~ Complete ~54:DONOR STRAND COMPLEMENTED FIMH ~71:GlaxoSmithKline Biologicals SA, Rue de l'Institut 89, RIXENSART B-1330, BELGIUM, Belgium ~72: ADAMO, Roberto;COZZI, Roberta;FANTONI, Adele;PHOGAT, Sanjay;ROSINI, Roberto;SCARSELLI, Maria;WAHOME, Newton~ 33:EP ~31:20211337.9 ~32:02/12/2020;33:EP ~31:20214942.3 ~32:17/12/2020

2023/05494 ~ Complete ~54:ARTIFICIAL INTELLIGENCE AND INTERNET OF THINGS ENABLED SYSTEM FOR ANALYSIS AND IMPROVEMENTS IN FINANCE INDUSTRY ~71:ARORA,Anu, ASSISTANT PROFESSOR, DEPARTMENT OF COMPUTER SCIENCE AND ENGINEERING, SCHOOL OF ENGINEERING, DESIGN AND AUTOMATION, GNA UNIVERSITY, PHAGWARA, KAPURTHALA, PUNJAB, India;KALRA,Akash, TRANSFER PRICING SUBJECT-MATTER EXPERT, 1425 W 26TH ST, UNIT A, HOUSTON, TX, United States of America;MEGHRAJANI,Indra, ASSOCIATE PROFESSOR, DEPARTMENT OF MARKETING, NARAYANA BUSINESS SCHOOL, AFFILIATED TO GUJARAT TECHNOLOGICAL UNIVERSITY, SANATHAL CIRCLE, AHMEDABAD, GUJARAT, India;MOHANTY,Jyoti Ranjan, ASSISTANT PROFESSOR, DEPARTMENT OF COMPUTER SCIENCE AND APPLICATION, UNIVERSITY OF AGRICULTURE AND TECHNOLOGY, BHUBANESWAR, ODISHA, India;MOHAPATRA,Manas Ranjan, LECTURER, DEPARTMENT OF COMPUTER SCIENCE, BANKI AUTONOMOUS COLLEGE, CUTTACK, ODISHA, India;PRIYA,Bandana, PROFESSOR, DEPARTMENT OF APPLIED SCIENCES & HUMANITIES, G L BAJAJ INSTITUTE OF TECHNOLOGY & MANAGEMENT, GREATER NOIDA, UTTAR PRADESH, India;SATHIAN,Brijesh, SCIENTIST, DEPARTMENT OF GERIATRICS AND LONG TERM CARE, RUMAILAH HOSPITAL, HAMAD MEDICAL CORPORATION, DOHA, P. O. BOX 3050, Qatar;THAKUR,Ganesh Kumar, ASSOCIATE PROFESSOR, DEPARTMENT OF APPLIED SCIENCES & HUMANITIES, ABES ENGINEERING COLLEGE, 19TH KM STONE, NH-09, GHAZIABAD, UTTAR PRADESH, India;THOMAS,Robin, ASSISTANT PROFESSOR, DEPARTMENT OF MANAGEMENT, CHHATTISGARH SWAMI VIVEKANAND TECHNICAL UNIVERSITY BHILAI, DURG, CHHATTISGARH, India;YELPALE,SayaliKarmode, ASSISTANT PROFESSOR, DEPARTMENT OF INFORMATION TECHNOLOGY, MGM COLLEGE OF ENGINEERING, KAMOTHE – NAVI MUMBAI, MAHARASHTRA, India ~72: ARORA,Anu;KALRA,Akash;MEGHRAJANI,Indra;MOHANTY,Jyoti Ranjan;MOHAPATRA,Manas Ranjan;PRIYA,Bandana;SATHIAN,Brijesh;THAKUR,Ganesh Kumar;THOMAS,Robin;YELPALE,SayaliKarmode~

2023/05503 ~ Complete ~54:A PROCESS FOR PRODUCING ALPHA OLEFINS ~71:SHELL INTERNATIONALE RESEARCH MAATSCHAPPIJ B.V., Carel van Bylandtlaan 30, HR The Hague, Netherlands ~72: HUH, Heejae;KOMPLIN, Glenn Charles~ 33:US ~31:63/125,740 ~32:15/12/2020

2023/05507 ~ Complete ~54:START-UP DEVICE, POWER STORAGE DEVICE, AND POWER DEVICE ~71:HONDA MOTOR CO., LTD., 1-1, Minami-Aoyama 2-chome Minato-ku, Tokyo, 107-8556, Japan ~72: DAIJIRO TAKIZAWA;JUN IWAMOTO;KEITA YAGI;NAOKI FUJIHARA~ 33:JP ~31:2020-180606 ~32:28/10/2020

2023/05526 ~ Complete ~54:MULTISPECIFIC ANTIBODIES HAVING SPECIFICITY FOR IL-4R AND IL-31 ~71:NUMAB THERAPEUTICS AG, Bachtobelstrasse 5, Switzerland ~72: ARAKAWA, Yoshio;GUNDE, Tea;HESS, Christian;JOHANSSON, Maria;MIYAKE, Yoshihide;SHIRAISHI, Noriko;SIMONIN, Alexandre;TIETZ, Julia;WARMUTH, Stefan~ 33:EP ~31:20216957.9 ~32:23/12/2020

2023/05528 ~ Complete ~54:COMPOSITIONS AND METHODS FOR THE TARGETING OF BCL11A ~71:SCRIBE THERAPEUTICS INC., 1150 Marina Village Parkway, United States of America ~72: ADIL, Maroof;COLIN, Isabel;DENNY, Sarah;HIGGINS, Sean;OAKES, Benjamin;STAAHL, Brett T.;URNES, Cole~ 33:US ~31:63/120,885 ~32:03/12/2020

. - APPLIED ON 2023/05/23 -

2023/05536 ~ Complete ~54:METHODS FOR TREATING DIGITALLY-IDENTIFIED IL-4/IL-13 RELATED DISORDERS ~71:SANOFI BIOTECHNOLOGY, 54, rue La Boetie, France ~72: BRYCE, Paul;DE RINALDIS, Emanuele;HERNANDEZ VECINO, Ramon Antonio;JIMENEZ, Francisco Javier Jimenez;MOLONY, Cliona Marie~ 33:US ~31:62/945,807 ~32:09/12/2019;33:US ~31:63/028,919 ~32:22/05/2020;33:EP ~31:20315281.4 ~32:02/11/2020;33:EP ~31:20315450.5 ~32:13/11/2020

2023/05537 ~ Complete ~54:FIXING DEVICE OF PC STRUCTURE ~71:CHINA CONSTRUCTION SECOND ENGINEERING BUREAU LTD, Building E, Yard 6, Automobile Museum East Road, Fengtai District, Beijing, 100000, People's Republic of China ~72: DENG Lihao;LI Xin;LIN Wenneng;WU Shaosong;YANG Xuekang;ZHOU Pei~ 33:CN ~31:202221281932.4 ~32:26/05/2022

2023/05541 ~ Complete ~54:CHEESE FLAVOR BASE, AND PREPARATION METHOD AND APPLICATION THEREOF ~71:Zhongkai University of Agriculture and Engineering, No. 501, Zhongkai Road, Haizhu District, Guangzhou, Guangdong province, People's Republic of China ~72: Bai WeiDong;Qian Min;Ren WenBin;Wang JingYu;Wang Wei;Wu JiaLin;Xin Xuan~ 33:CN ~31:2022106822714 ~32:16/06/2022

2023/05559 ~ Complete ~54:COMPOSITION ~71:UNILEVER GLOBAL IP LIMITED, Port Sunlight, Wirral, Merseyside, CH62 4ZD, United Kingdom ~72: STEPHEN NORMAN BATCHELOR~ 33:EP ~31:20212164.6 ~32:07/12/2020

2023/05561 ~ Complete ~54:TOPICAL SANITISING COMPOSITION COMPRISING MINIMAL AMOUNTS OF AN ANITMICROBIAL LIPID ~71:UNILEVER GLOBAL IP LIMITED, Port Sunlight, Wirral, Merseyside, CH62 4ZD, United Kingdom ~72: AMITABHA MAJUMDAR;MORRIS WASKAR;PRATHYUSHA MALLEMALA;RIMPA GHOSH~ 33:IN ~31:202021052554 ~32:02/12/2020;33:EP ~31:21152232.1 ~32:19/01/2021

2023/05572 ~ Complete ~54:METHODS OF TREATING DIABETES ~71:Eli Lilly and Company, Lilly Corporate Center, INDIANAPOLIS 46285, IN, USA, United States of America ~72: BUE-VALLESKEY, Juliana M.;CARR, Molly Corbett;CHANG, Annette Meeok;CHIEN, Yueh-Ling a/k/a Jenny Y.;CHIGUTSA, Emmanuel;GARHYAN, Parag;HAUPT, Axel Richard Karl-August;ILAG, Liza L.;KATZ, Michelle Lynne;KAZDA, Christof Matthias;SCHNECK, Karen Brenda;TANG, Cheng Cai~ 33:US ~31:63/125,165 ~32:14/12/2020

2023/05576 ~ Complete ~54:DEVICE FOR HELPING A VEHICLE TO PASS OVER AN OBSTACLE ~71:MYD'L, 34 boulevard Ornano, France ~72: BELMAN, Pierre;ENGLER, Frédéric~ 33:FR ~31:2012173 ~32:26/11/2020

2023/05535 ~ Complete ~54:METHOD AND SYSTEM OF IDENTIFYING AND QUANTIFYING ANTIBODY FRAGMENTATION ~71:REGENERON PHARMACEUTICALS, INC., 777 Old Saw Mill River Road, Tarrytown, United States of America ~72: WANG, Shunhai;YAN, Yuetian~ 33:US ~31:62/793,004 ~32:16/01/2019

2023/05555 ~ Complete ~54:COMPOSITION FOR MAKING BOUILLONS ~71:UNILEVER IP HOLDINGS B.V., Weena 455, 3013, AL Rotterdam, Netherlands ~72: HARMANNUS TAMMES;LIVIA CEBOTARESCU;MARCELO CAMILO DE OLIVEIRA~ 33:EP ~31:20217753.1 ~32:30/12/2020

2023/05557 ~ Complete ~54:HYDROXYSTEARIC ACID FOR INDUCING GENERATION OF ANTIMICROBIAL PEPTIDES ~71:UNILEVER GLOBAL IP LIMITED, Port Sunlight, Wirral, Merseyside, CH62 4ZD, United Kingdom ~72: AMITABHA MAJUMDAR;MORRIS WASKAR;MRUTHYUNJAYA SWAMY MATHAPATHI;RIMPA GHOSH;SREENIVASA THIMMAIAH;THRISHA CLEETUS ALEXANDER~ 33:IN ~31:202021052758 ~32:03/12/2020;33:EP ~31:21152775.9 ~32:21/01/2021

2023/05563 ~ Complete ~54:COMPOSITION ~71:UNILEVER GLOBAL IP LIMITED, Port Sunlight, Wirral, Merseyside, CH62 4ZD, United Kingdom ~72: RACHANA SANKAR;SARMISTHA BISWAS~ 33:IN ~31:202021054415 ~32:14/12/2020;33:EP ~31:21153179.3 ~32:25/01/2021;33:IN ~31:202121015725 ~32:01/04/2021

2023/05568 ~ Complete ~54:USE OF GLP-2 ANALOGUES IN PATIENTS WITH RENAL INSUFFICIENCY ~71:ZEALAND PHARMA A/S, Sydmarken 11, Denmark ~72: AGERSNAP, Mikkel Askjær;KNUDSEN, Kim Mark;SONNE, Kim~ 33:EP ~31:20214763.3 ~32:16/12/2020;33:EP ~31:21166078.2 ~32:30/03/2021

2023/05565 ~ Complete ~54:PERSONAL CARE COMPOSITION ~71:UNILEVER GLOBAL IP LIMITED, Port Sunlight, Wirral, Merseyside, CH62 4ZD, United Kingdom ~72: TINGYAN MI;XUELAN GU~ 33:CN ~31:PCT/CN2020/139550 ~32:25/12/2020;33:EP ~31:21155104.9 ~32:04/02/2021

2023/05569 ~ Complete ~54:COMPOSITIONS CONTAINING NICOTINAMIDE AND VITAMIN B6 AND METHODS OF USING SUCH COMPOSITIONS FOR PROMOTING MUSCLE GROWTH ~71:Société des Produits Nestlé S.A., Avenue Nestlé 55, VEVEY 1800, SWITZERLAND, Switzerland ~72: ANCEL, Sara;FEIGE, Jerome;MICHAUD, Joris;STUELSATZ, Pascal~ 33:EP ~31:20204861.7 ~32:30/10/2020

2023/05573 ~ Complete ~54:HYBRID POWER PLANT FOR AUTONOMOUSLY SUPPLYING ENERGY TO BUILDINGS AND INDUSTRIAL FACILITIES ~71:iGas energy GmbH, Cockerillstraße 100, STOLBERG 52222, GERMANY, Germany ~72: LENTZ, Karl-Heinz~ 33:EP ~31:20208567.6 ~32:19/11/2020

2023/05575 ~ Complete ~54:ENANTIOSELECTIVE ALKENYLATION OF ALDEHYDES ~71:Amgen Inc., One Amgen Center Drive, THOUSAND OAKS 91320-1799, CA, USA, United States of America ~72: BAUCOM, Kyle D.;CORBETT, Michael T.;CUI, Sheng;LANGILLE, Neil F.;PROFETA, Roberto;ROTHELI, Andreas Rene;SMITH, Austin G.~ 33:US ~31:63/118,057 ~32:25/11/2020

2023/05532 ~ Provisional ~54:AUTOMATED PULLTESTER ~71:Johannes Jacobus Naude, 12 Arend avenue, South Africa ~72: Johannes Jacobus Naude~

2023/05534 ~ Complete ~54:PERSON RE-IDENTIFICATION METHOD AND APPARATUS BASED ON SELF-SUPERVISED LEARNING, DEVICE AND STORAGE MEDIUM ~71:Xiamen Meiya Pico Information Co., Ltd., Meiya Pico Building,12,Guanri Road,2nd Phase of Xiamen Software Park,Xiamen,Fujian, Xiamen, People's

Republic of China ~72: Liang Yulu;Lin Shuqiang;Lin Xiuming;Shen Daiming;Wu Hongwei;Zhu Haiyong~ 33:CN ~31:202210168277X ~32:23/02/2022

2023/05540 ~ Complete ~54:MODULAR SECURITY CABINET ~71:NALEDI TELECOMS (Pty) Ltd, 6 Sedge Close, Arundo Estate, The Reeds, Centurion, 0157, South Africa;NATIONAL STAINLESS STEEL CENTRE (Pty) Ltd, Cnr Pomona and 5th Ave, Bredell, Kempton Park, 1623, South Africa ~72: Cyril Kgoedi;Dean Halles;Mischel Frljak;Paul Faku~ 33:ZA ~31:2022/10927 ~32:05/10/2022

2023/05545 ~ Complete ~54:A SALT LICK FOR ANIMALS ~71:KROON, Christiaan Michael, 21 Cloister Street, Meerhof, HARTBEESPOORT 0216, North West Province, SOUTH AFRICA, South Africa ~72: BASSON (Deceased), Carl Magnus Lonngren;KROON, Christiaan Michael~

2023/05547 ~ Complete ~54:TERMINAL ASSEMBLY AND METHOD FOR FABRICATION THEREOF ~71:CHANGCHUN JETTY AUTOMOTIVE TECHNOLOGY CO.,LTD., No. 957, Shunda Road, High-tech Development Zone, Chaoyang District, People's Republic of China ~72: WANG Chao~ 33:CN ~31:202011488709.2 ~32:16/12/2020

2023/05549 ~ Complete ~54:CONTINUOUS ELEMENT DECONTAMINATION AND STERILIZATION SYSTEM ~71:MAZURSKY, Alexis, 6250 Holabird St. Apt 33 San Diego, California 92120, San Diego, United States of America;MAZURSKY, Hernan, 6250 Holabird St. Apt 33 San Diego, California 92120, San Diego, United States of America;MAZURSKY, Luis Adolfo, 6250 Holabird St. Apt 33 San Diego, California 92120, San Diego, United States of America ~72: MAZURSKY, Alexis;MAZURSKY, Hernan;MAZURSKY, Luis Adolfo~ 33:US ~31:63/107,366 ~32:29/10/2020

2023/05556 ~ Complete ~54:PROLIPID COMPOSITION FOR PERSONALIZED BENEFITS AND METHOD FOR USING THE SAME ~71:UNILEVER GLOBAL IP LIMITED, Port Sunlight, Wirral, Merseyside, CH62 4ZD, United Kingdom ~72: BRIAN JOHN DOBKOWSKI;GALINA YAROVA;JASON PETER HARCUP;JOHN STEVEN BAJOR;WILLIAM F LATHROP~ 33:US ~31:63/130,444 ~32:24/12/2020;33:EP ~31:21158293.7 ~32:19/02/2021

2023/05558 ~ Complete ~54:AN ANTIPERSPIRANT COMPOSITION ~71:UNILEVER GLOBAL IP LIMITED, Port Sunlight, Wirral, Merseyside, CH62 4ZD, United Kingdom ~72: PRAVEEN NYALAM;SOMNATH DAS~ 33:IN ~31:202021053948 ~32:11/12/2020;33:EP ~31:21189217.9 ~32:02/08/2021

2023/05560 ~ Complete ~54:COMPOSITION ~71:UNILEVER GLOBAL IP LIMITED, Port Sunlight, Wirral, Merseyside, CH62 4ZD, United Kingdom ~72: STEPHEN NORMAN BATCHELOR~ 33:EP ~31:20212163.8 ~32:07/12/2020

2023/05566 ~ Complete ~54:INTEGRATED WATERPROOF SEAL ASSEMBLY AND USE THEREOF ~71:SHENZHEN COTRAN NEW MATERIAL CO., LTD, Building No. 2 And No. 3, Fuchuan Science And Technology Industrial Park, Huanli Road, Guangming District Shenzhen, People's Republic of China ~72: SONG, Bin;ZHOU, Dong;ZHU, Dongdong~ 33:CN ~31:202011419281.6 ~32:07/12/2020

2023/05571 ~ Complete ~54:HETEROCYCLE DERIVATIVES FOR TREATING TRPM3 MEDIATED DISORDERS ~71:Katholieke Universiteit Leuven, KU Leuven Research & Development, Waaistraat 6, Bus 5105, LEUVEN 3000, BELGIUM, Belgium ~72: ALLASIA, Sara;ARZEL, Philippe;CHALTIN, Patrick;KILONDA, Amuri;MARCHAND, Arnaud;REICH, Melanie;VANHERCK, Jean-Christophe;VOETS, Thomas;VRIENS, Joris;WELBERS, André~ 33:EP ~31:20209574.1 ~32:24/11/2020

2023/05663 ~ Complete ~54:A MOTOR CONTROL CONTROLLER SYSTEM AND METHODS ~71:ETA GREEN POWER LIMITED, Hethel Engineering Centre, Chapman Way, United Kingdom ~72: Alistair CHEESEMAN;Liam BOWMAN~ 33:GB ~31:2208546.8 ~32:10/06/2022

2023/05672 ~ Complete ~54:PET LITTER REPOSITORY AND METHOD OF USING SAME ~71:SCHEEPERS, Erika, 26 Nellmapius Road, Irene, South Africa ~72: SCHEEPERS, Erika~ 33:ZA ~31:2022/05816 ~32:26/05/2022

2023/05542 ~ Complete ~54:ARGINASE INHIBITORS AND METHODS OF USE THEREOF ~71:AstraZeneca AB, SÖDERTÄLJE 151 85, SWEDEN, Sweden ~72: COOK, Steve;FINLAY, Maurice Raymond Verschoyle;GREBE, Tyler;KAWATKAR , Sameer;MLYNARSKI, Scott Nathan;SIMPSON, Iain;WANG, Jianyan;WU , Dedong~ 33:US ~31:62/631,659 ~32:17/02/2018;33:US ~31:62/671,576 ~32:15/05/2018;33:US ~31:62/721,113 ~32:22/08/2018;33:US ~31:62/778,002 ~32:11/12/2018

2023/05551 ~ Complete ~54:ENERGY-SAVING DOUBLE-BEARING VERTICAL GRINDING MILL FOR DRY GRINDING AND SHAPING GRINDING MILL ~71:Xiamen ISO Standard Sand Co.,Ltd, No.45, Yanghe Road, Xinyang Industrial Zone, Haicang District, Xiamen, Fujian, 361000, People's Republic of China ~72: SUN, Zhisheng~ 33:CN ~31:202110302477.5 ~32:22/03/2021

2023/05553 ~ Complete ~54:AQUEOUS CLEANING COMPOSITION ~71:UNILEVER GLOBAL IP LIMITED, Port Sunlight, Wirral, Merseyside, CH62 4ZD, United Kingdom ~72: NAGARAJA ACHARYA;PINTU PAUL;SAMIRAN MAHAPATRA;SHANTHI APPAVOO~ 33:EP ~31:20215090.0 ~32:17/12/2020

2023/05539 ~ Complete ~54:FIRE SAFETY ~71:MALAN, Melt, 265 Auriga Street, Waterkloof Ridge, South Africa ~72: MALAN, Melt~ 33:ZA ~31:2022/02255 ~32:23/02/2022

2023/05550 ~ Complete ~54:THERMAL INVERTER ~71:TI-HOLDINGS B.V., Pietersbergweg 283, Netherlands ~72: Rudolf KOEKKOEK;Terence VECHIK~

2023/05554 ~ Complete ~54:A HARD SURFACE CLEANING COMPOSITION ~71:UNILEVER GLOBAL IP LIMITED, Port Sunlight, Wirral, Merseyside, CH62 4ZD, United Kingdom ~72: IVANA TROMBETTA;LORENA GALLUZZI;LUCA PRETALI;SERENA PEZZIA~ 33:EP ~31:20212150.5 ~32:07/12/2020

2023/05562 ~ Complete ~54:COMPOSITION ~71:UNILEVER GLOBAL IP LIMITED, Port Sunlight, Wirral, Merseyside, CH62 4ZD, United Kingdom ~72: NEIL STEPHEN BURNHAM;STEPHEN NORMAN BATCHELOR~ 33:EP ~31:20212171.1 ~32:07/12/2020

2023/05564 ~ Complete ~54:PERSONAL CARE COMPOSITION COMPRISING GLYCINATE SURFACTANT, POLYOL AND NONIONIC SURFACTANT COMPRISING ALKYL GLUCOSIDE ~71:UNILEVER GLOBAL IP LIMITED, Port Sunlight, Wirral, Merseyside, CH62 4ZD, United Kingdom ~72: CHANCHAN PAN;LANHUA LIU~ 33:CN ~31:PCT/CN2020/133390 ~32:02/12/2020;33:EP ~31:21151719.8 ~32:15/01/2021

2023/05570 ~ Complete ~54:USE OF ANTI-PRO/LATENT MYOSTATIN ANTIBODY FOR TREATING SPINAL MUSCULAR ATROPHY ~71:Scholar Rock, Inc., 301 Binney Street, 3rd Floor, CAMBRIDGE 02142, MA, USA, United States of America ~72: CHYUNG, Yung;IARROBINO, Ryan;NOMIKOS, George;SONG, Guochen~ 33:US ~31:63/105,850 ~32:26/10/2020;33:US ~31:63/106,172 ~32:27/10/2020;33:US ~31:63/200,955 ~32:05/04/2021;33:US ~31:63/201,157 ~32:15/04/2021;33:US ~31:63/202,317 ~32:06/06/2021;33:US ~31:63/202,372 ~32:08/06/2021;33:US ~31:63/202,900 ~32:29/06/2021;33:US ~31:63/260,725 ~32:30/08/2021;33:US ~31:63/261,398 ~32:20/09/2021

2023/05577 ~ Complete ~54:DESIGN AND MANUFACTURING OF A SINGLE PIECE ROCKET ENGINE ~71:AGNIKUL COSMOS PRIVATE LIMITED, 910, SYNDICATE BANK COLONY, ANNA NAGAR WEST EXTENSION, India ~72: RAVICHANDRAN, Srinath;SHAH KHADRI, Syed Peer Mohamed~ 33:IN ~31:202041046382 ~32:23/10/2020

2023/05533 ~ Provisional ~54:EARTH CLAMP ~71:Clear Creek Trading 167 (Pty) Ltd., 11 Brammer Street, South Africa ~72: VENTER, John Murray~

2023/05538 ~ Complete ~54:ALL-FABRIC-BASED SELF-POWERED MULTI-DRIVE SENSING SYSTEM, AND PREPARATION METHOD AND APPLICATION THEREOF ~71:Anhui Polytechnic University, Beijing Middle Road, Wuhu City, Anhui Province, People's Republic of China ~72: DING Binbin;HE You;HU Qiaole;LI Changlong;LI Zhiying;LIU Tongshuang;NIE Wenqi;TANG Jinhao;WANG Peng;ZHENG Xianhong~

2023/05543 ~ Complete ~54:FLANGE DEVICE FOR A WATER TURBINE ~71:HUANENG XINJIANG ENERGY DEVELOPMENT CO., LTD. TOSHGANHE HYDROPOWER BRANCH, No. 14 North Street, Aheqi County, Kizilsu Kyrgyz, Autonomous Prefecture, Xinjiang Uygur Autonomous, People's Republic of China ~72: HUA, Rongjun;WANG, Yuanfang;YANG, Jun;ZHANG, Yunqing;ZHENG, Gang~ 33:CN ~31:202221324015.X ~32:30/05/2022

2023/05552 ~ Complete ~54:SOAP BAR COMPOSITION ~71:UNILEVER GLOBAL IP LIMITED, Port Sunlight, Wirral, Merseyside, CH62 4ZD, United Kingdom ~72: ANGELA JOY KOW;ARUN M MANGAVE;DARRIUS PILLAY;GANESH KHEDKAR~ 33:EP ~31:20212976.3 ~32:10/12/2020

2023/05531 ~ Provisional ~54:A FREIGHT CARRIER ~71:BENNETTO, Peter Geoffrey, 18 Vida Nova, Buh Rein, Cape Town 7570, SOUTH AFRICA, South Africa ~72: BENNETTO, Peter Geoffrey~

2023/05567 ~ Complete ~54:SYSTEMS AND METHODS OF MODIFYING A BODY OF FABRIC ~71:CO GEAR PTY LTD, 12/493 South Street, Australia ~72: O'LEARY, Kym Lennette~ 33:AU ~31:2020903205 ~32:08/09/2020

2023/05574 ~ Complete ~54:FOOTWEAR COUNTER FOR EASIER ENTRY AND REMOVAL ~71:Skechers U.S.A., Inc. II, 228 Manhattan Beach Blvd., MANHATTAN BEACH 90266 , CA, USA, United States of America ~72: CHUANG, Frank F.;KELLEY, Scott;LIAO, Pei-Chun;STOCKBRIDGE, Kurt;TJA, Johnson;WEEKS, John Maxwell;XIE, Hui~ 33:US ~31:63/256,521 ~32:15/10/2021

2023/05544 ~ Complete ~54:AN INTELLIGENT CONTROL SYSTEM FOR MULTIMEDIA TEACHING EQUIPMENT ~71:MINJIANG TEACHERS COLLEGE, No. 1 Xuefu South Road, Shangjie Town, Minhou County, Fuzhou, Fujian Province, 350108, People's Republic of China ~72: LIN, Deli~

2023/05548 ~ Complete ~54:ENGINEERED CLASS 2 TYPE V CRISPR SYSTEMS ~71:SCRIBE THERAPEUTICS INC., 1150 Marina Village Parkway, United States of America ~72: COLIN, Isabel;DENNY, Sarah;HIGGINS, Sean;MAKHIJA, Suraj;OAKES, Benjamin;SIDORE, Angus;STAAHL, Brett T.;VIJAYAKUMAR, Gayathri~ 33:US ~31:63/121,196 ~32:03/12/2020;33:US ~31:63/162,346 ~32:17/03/2021;33:US ~31:63/208,855 ~32:09/06/2021

. - APPLIED ON 2023/05/24 -

2023/05580 ~ Complete ~54:IMAGE RECOGNITION VOICE BROADCASTING DEVICE FOR PRESCHOOL EDUCATION ~71:School of Electronic Engineering and Intelligent Manufacturing, Anqing Normal University, No. 128, Linghu South Road, Anqing, Anhui, 246011, People's Republic of China ~72: CHENG, Fei;PAN, Yuanye;WANG, Yingli;WANG, Zhiwei;WU, Yiheng;YE, Chengming;ZHANG, Qilei;ZHAO, Qinyi~

2023/05585 ~ Complete ~54:AN INCLINED STRESS RELIEF GROOVE ~71:Hunan University of Science and Technology, No.2 Shimatou, Yuhu District, Xiangtan City, Hunan Province, 411201, People's Republic of China ~72: Jiahao FU;Xu ZHANG;Yongzheng JIANG;Yufeng ZHOU;Zhigang FU~

2023/05589 ~ Complete ~54:METHODS AND INSTALLATION FOR THE PRODUCT PREPARATION OF FISCHER-TROPSCH-BASED RAW PRODUCTS FOR PRODUCING PREFORMULATED FUELS OR FUELS CONFORMING TO STANDARDS ~71:INERATEC GMBH, SIEMENSALLEE 84, 76187 KARLSRUHE, GERMANY, Germany ~72: BAUDNER, Julian;SELINSEK, Manuel~ 33:EP ~31:20204893.0 ~32:30/10/2020

2023/05596 ~ Complete ~54:POLYOLEFIN PIPE RESIN WITH VERY GOOD SAGGING AND SLOW CRACK GROWTH RESISTANCE ~71:BOREALIS AG, Trabrennstrasse 6-8, Vienna, Austria ~72: ÄÄRILÄ, Jari;DOU, Qizheng;POMAKHINA, Elena;SUMERIN, Victor~ 33:EP ~31:20203896.4 ~32:26/10/2020

2023/05599 ~ Complete ~54:SYSTEM FOR ON-DEMAND PRODUCTION OF HYDROGEN FROM A CARRIER FLUID AND DISPOSAL OF SOLID BYPRODUCTS ~71:Hysilabs SAS, Bâtiment Lavoisier, Avenue Louis Philibert, Technopôle de l'environnement Arbois-Méditerranée, AIX-EN-PROVENCE 13100, FRANCE, France ~72: LOME, Vincent;MUSSOT, Jean-Luc~ 33:EP ~31:20204981.3 ~32:30/10/2020

2023/05604 ~ Complete ~54:PASSIVE COLD STORAGE HEAT EXCHANGER ~71:CHINA NUCLEAR POWER ENGINEERING CO., LTD., No. 117 West Third Ring North Road, Haidian District, Beijing, 100840, People's Republic of China ~72: BAILI LI;BEI HU;FENGLIN ZHANG;HAONAN CHEN;HUA WEN;JIAN KANG;JING LIU;JINQUAN HAN;LILI ZHANG;SHANSHAN QIU;SONG LU;XIN LIU;YUNYUN ZHU~ 33:CN ~31:202011346554.9 ~32:26/11/2020

2023/05665 ~ Complete ~54:MODEL FOR PREDICTING RISK OF SMALL CELL TRANSFORMATION IN PATIENT WITH LUNG ADENOCARCINOMA AND ESTABLISHMENT METHOD THEREOF ~71:Cancer Hospital, Chinese Academy of Medical Sciences, No. 17 Panjiayuan Nanli, Chaoyang District, People's Republic of China ~72: Jianming YING;Junling LI;Lin YANG;Puyuan XING;Shouzheng WANG;Tongji XIE;Yan LI~ 33:CN ~31:202211419631.8 ~32:14/11/2022

2023/05583 ~ Complete ~54:UNIVERSAL INSTRUMENT CLUSTER ASSEMBLY FOR VEHICLES AND A METHOD THEREOF ~71:MAHINDRA & MAHINDRA LIMITED, MAHINDRA RESEARCH VALLEY, MAHINDRA WORLD CITY, PLOT NO: 41/1, ANJUR P.O. KANCHIPURAM DISTRICT, CHENGALPATTU, TAMILNADU, INDIA 603004, India ~72: KUMAR T, Praveen;MEGHNATHAN, Kumar;PRABAKARAN, Palanivelu;SHANMUGAM N, Stanly;VK, Karthikeyan~ 33:IN ~31:202241029878 ~32:24/05/2022

2023/05608 ~ Complete ~54:DIAGNOSTIC ASSAY SYSTEM WITH REPLACEABLE PROCESSING MODULES AND REMOTE MONITORING ~71:CEPHEID, 904 Caribbean Dr. E., Sunnyvale, California, 94089, United States of America ~72: BRIAN BLIVEN;GREGORY MOTE;RONALD CHANG;STEVEN MONTGOMERY~ 33:US ~31:63/107,934 ~32:30/10/2020

2023/05584 ~ Complete ~54:BIOLOGICAL PREPARATION FOR FERMENTATION OF SILAGE TOTAL MIXED RATIONS AND PREPARATION METHOD THEREFOR ~71:Shandong Jianyuan Biotechnology Co., Ltd., No. 214, Nanguan Street, Taishan District, Tai'an City, Shandong Province, 271000, People's Republic of China ~72: WANG, Cheng~ 33:CN ~31:2022111067071 ~32:13/09/2022

2023/05591 ~ Complete ~54:AMORPHOUS MELANOCORTIN-4 RECEPTOR AGONIST ~71:LG CHEM, LTD., 128, YEOUI-DAERO, YEONGDEUNGPO-GU, SEOUL 07336, REPUBLIC OF KOREA, Republic of Korea ~72: CHUN, Seul Ah;HAM, Jin Ok;KIM, Ji Yoon;KIM, Sung Won;LEE, Ho Yeon;LEE, Sang Dae;PARK, Jong Won~ 33:KR ~31:10-2020-0142399 ~32:29/10/2020

2023/05597 ~ Complete ~54:PDC CUTTER WITH ENHANCED PERFORMANCE AND DURABILITY ~71:SCHLUMBERGER TECHNOLOGY B.V., Parkstraat 83, Netherlands ~72: BURHAN, Yuri;CHEN, Ke;GAN, Xiaoge;ZHANG, Youhe~ 33:US ~31:63/117,694 ~32:24/11/2020

2023/05605 ~ Complete ~54:MEANS AND METHODS FOR PRODUCING ANTIBODY-LINKER CONJUGATES ~71:ARARIS BIOTECH AG, Riedhofstrasse 11, CH-8804, Au Zurich, Switzerland ~72: DRAGAN GRABULOVSKI;ISABELLA ATTINGER-TOLLER;PHILIPP PROBST;PHILIPP SPYCHER;RAMONA STARK;ROMAIN BERTRAND~ 33:EP ~31:20020492.3 ~32:25/10/2020;33:EP ~31:20203887.3 ~32:26/10/2020

2023/05610 ~ Complete ~54:CANCER IMMUNOTHERAPIES TO PROMOTE HYPERACUTE REJECTION ~71:CORNELL UNIVERSITY, Center for Technology Licensing (“CTL”) at Cornell University, 395 Pine Tree Road, Suite 310, Ithaca, New York, 14850, United States of America ~72: ABDUL G KHAN;HE LIU;IVO LORENZ;MING GUO;NEIL H BANDER;WILHELM LECONET~ 33:US ~31:63/119,359 ~32:30/11/2020

2023/05601 ~ Complete ~54:A SYNERGISTIC PERFUMING COMPOSITION ~71:Firmenich SA, 7, rue de la Bergère, SATIGNY 1242, SWITZERLAND, Switzerland ~72: VON TSCHARNER, Sabine~ 33:US ~31:63/127,235 ~32:18/12/2020;33:EP ~31:21155614.7 ~32:05/02/2021

2023/05600 ~ Complete ~54:DEVICE AND PROCESS FOR EXTENDING A VENTILATOR CIRCUIT ~71:Convergence Medical Sciences Ltd., One Executive Place, Suite 700, 1816 Crowchild Trail NW, CALGARY T2M 3Y7, ALBERTA, CANADA, Canada ~72: ROY, Steven Daniel~ 33:US ~31:63/107,662 ~32:30/10/2020

2023/05664 ~ Complete ~54:A MULTI-TERRAIN MODE SELECTING SYSTEM FOR A VEHICLE ~71:MAHINDRA AND MAHINDRA LIMITED, Mahindra & Mahindra Limited, Mahindra Research Valley, Mahindra World City, Plot No: 41/1, Anjur P.O., India ~72: KAMATH; Pavan;KULHADE; Abhay;MEHATA; Puneet;PALRAJ; Ganeshkumar~ 33:IN ~31:202241029770 ~32:24/05/2022

2023/05611 ~ Complete ~54:AN IRON FORTIFIED TEA COMPOSITION ~71:EKATERRA RESEARCH AND DEVELOPMENT UK LIMITED, Colworth Science Park, Sharnbrook, Bedfordshire, MK44 1LQ, United Kingdom ~72: BALAMURUGAN VELUSAMY;DEEPAK RAMACHANDRA MHASAVADE;SWATHY PALAGIRI;VETRI KUMARAN~ 33:IN ~31:202021054641 ~32:15/12/2020

2023/05587 ~ Complete ~54:BARRIER ARRANGEMENT ~71:AFFIRM MANUFACTURING SERVICES (PROPRIETARY) LIMITED T/A ROTOTANK, Plot 123 Van der Hoff Road, Pretoria, Gauteng, South Africa ~72: TERRENCE CLIVE STANLEY~ 33:ZA ~31:2022/02686 ~32:07/03/2022

2023/05592 ~ Complete ~54:PROCESS FOR PRODUCING FOAM PANELS FOR THE PRODUCTION OF FOAM FILMS ~71:EVONIK OPERATIONS GMBH, RELLINGHAUSER STRASSE 1-11, 45128 ESSEN, GERMANY, Germany ~72: BECKER, Florian;GOLDMANN, Felix;PINTO, Jorge, Manuel;RICHTER, Thomas;ROTH, Matthias Alexander~ 33:EP ~31:20204645.4 ~32:29/10/2020

2023/05595 ~ Complete ~54:CRYSTAL TYPE II OF MELANOCORTIN RECEPTOR AGONIST COMPOUND AND METHOD FOR PREPARING SAME ~71:LG CHEM, LTD., 128, YEOUI-DAERO, YEONGDEUNGPO-GU, SEOUL 07336, REPUBLIC OF KOREA, Republic of Korea ~72: CHUN, Seul Ah;HAM, Jin Ok;KIM, Ji Yoon;KIM, Sung Won;LEE, Ho Yeon;LEE, Sang Dae;PARK, Jong Won~ 33:KR ~31:10-2020-0142397 ~32:29/10/2020

2023/05607 ~ Complete ~54:HIERARCHICAL COMPOSITE WEAR PART WITH STRUCTURAL REINFORCEMENT ~71:MAGOTTEAUX INTERNATIONAL S.A., Rue Adolphe Dumont, 4051, Vaux-sous-Chèvremont, Belgium ~72: AMOLDEEP SINGH JAGGI;GUY BERTON;MARC BABINEAU;STÉPHANE DESILES~ 33:EP ~31:20213121.5 ~32:10/12/2020

2023/05582 ~ Complete ~54:HERBAL COMPOSITION FOR DIABETES MELLITUS ~71:BORKAR, Kanchan M., Research Fellow, Dr Mane Medical Foundation and Research Center, India;MANE, Swapnil M., Research Fellow, Dr Mane Medical Foundation and Research Center, India;SHEKOKAR, Anant Kumar V., Research Fellow, Dr Mane Medical Foundation and Research Center, India ~72: BORKAR, Kanchan M.;MANE, Swapnil M.;SHEKOKAR, Anant Kumar V.~

2023/05598 ~ Complete ~54:A PLASTERBOARD, A STUCCO SLURRY, USE OF A STUCCO SLURRY AND A PARTITION ~71:SAINT-GOBAIN CONSTRUCTION PRODUCTS UK LIMITED, Saint-Gobain House, East Leake, Loughborough, United Kingdom ~72: BROOKS, Laura;JONES, Nicholas;PARMAR, Maike;RIDEOUT, Jan;WAKEFIELD, Richard~ 33:GB ~31:2020269.3 ~32:21/12/2020

2023/05581 ~ Complete ~54:METHOD AND APPARATUS FOR PRODUCING FINE SPHERICAL POWDERS FROM COARSE AND ANGULAR POWDER FEED MATERIAL ~71:PYROGENESIS CANADA INC., 1744 rue William, Suite 200, Canada ~72: DORVAL DION, Christopher, Alex;PROULX, François;SHAHVERDI, Ali~ 33:US ~31:62/585,882 ~32:14/11/2017

2023/05588 ~ Complete ~54:A MODIFIED PROTEIN BIOLOGICAL DEMULSIFIER ~71:NORTHEAST AGRICULTURAL UNIVERSITY, No. 600 Changjiang Road, Xiangfang District, Harbin City, Heilongjiang Province, 150006, People's Republic of China ~72: Dapeng LI;Genji YANG;Ning HOU;Xianyue LI~

2023/05593 ~ Complete ~54:CRYSTALLINE FORM III OF MELANOCORTIN RECEPTOR AGONIST COMPOUND AND METHOD FOR PREPARING SAME ~71:LG CHEM, LTD., 128, YEOUI-DAERO, YEONGDEUNGPO-GU, SEOUL 07336, REPUBLIC OF KOREA, Republic of Korea ~72: CHUN, Seul Ah;HAM, Jin Ok;KIM, Ji Yoon;KIM, Sung Won;LEE, Ho Yeon;LEE, Sang Dae;PARK, Jong Won~ 33:KR ~31:10-2020-0142398 ~32:29/10/2020

2023/05606 ~ Complete ~54:VENTING CLOSURE LINER ~71:SILGAN WHITE CAP LLC, 1140 South 31st Street, Downers Grove, Illinois, 60515, United States of America ~72: DARREN NEPUTY;DAVID RICHARD YONKERS~ 33:US ~31:63/129,015 ~32:22/12/2020

2023/05612 ~ Complete ~54:A ZINC FORTIFIED TEA COMPOSITION ~71:EKATERRA RESEARCH AND DEVELOPMENT UK LIMITED, Colworth Science Park, Sharnbrook, Bedfordshire, MK44 1LQ, United Kingdom ~72: BALAMURUGAN VELUSAMY;DEEPAK RAMACHANDRA MHASAVADE;SWATHY PALAGIRI;VETRI KUMARAN~ 33:IN ~31:202021054640 ~32:15/12/2020

2023/05594 ~ Complete ~54:CRYSTALLINE FORM I OF MELANOCORTIN RECEPTOR AGONIST COMPOUND, AND METHOD FOR PREPARING SAME ~71:LG CHEM, LTD., 128, YEOUI-DAERO, YEONGDEUNGPO-GU, SEOUL 07336, REPUBLIC OF KOREA, Republic of Korea ~72: CHUN, Seul Ah;HAM, Jin Ok;KIM, Ji Yoon;KIM, Sung Won;LEE, Ho Yeon;LEE, Sang Dae;PARK, Jong Won~ 33:KR ~31:10-2020-0142396 ~32:29/10/2020

2023/05602 ~ Complete ~54:LETTUCE PLANT RESISTANT TO DOWNY MILDEW AND RESISTANCE GENE ~71:Enza Zaden Beheer B.V., Haling 1E, ENKHUIZEN 1602 DB, THE NETHERLANDS, Netherlands ~72: NADAL BIGAS, Judit;PEL, Mathieu André;TER RIET, Bas;ZEILMAKER, Tieme~ 33:IB ~31:2020/087264 ~32:18/12/2020

2023/05578 ~ Provisional ~54:UNDERGROUND LOCATION TRACKING ~71:SEKGOTHALI (PTY) LTD., 912 Ranyane Street, Eureka Park, Meloding, VIRGINIA 9430, Free State, SOUTH AFRICA, South Africa ~72: MAFAMMERE, Makole Bennet;MOHALE, Malefetsane Joseph~

2023/05579 ~ Complete ~54:METHOD FOR DETECTING CNV MARKER OF SNX29 GENE OF XIANGDONG BLACK GOATS, AND APPLICATION THEREOF ~71:Hunan Agricultural University, No. 1 Nongda Road, Furong District, Changsha City, Hunan Province, 410128, People's Republic of China ~72: LIU, Mei;PENG, Peiya;YANG, Long;YIN, Yulong~ 33:CN ~31:2022115864364 ~32:08/12/2022

2023/05603 ~ Complete ~54:TRAY FOR FARMING INSECTS, SUITABLE FOR INDUSTRIAL-SCALE FARMING ~71:Ynsect, 1 Rue Pierre Fontaine, ÉVRY-COURCOURONNES CEDEX 91058, FRANCE, France ~72: COMPARAT, Solène;ESCALANTE, Pedro;SARTON DU JONCHAY, Thibault~ 33:FR ~31:2012795 ~32:07/12/2020

2023/05613 ~ Provisional ~54:PROMO-CONE (PROMOTIONAL CONE) ~71:LUCENT PROMOTIONS CC, 1983 BLOCK F, SOSHANGUVE, South Africa ~72: STANLEY MAKHAYA~

2023/05586 ~ Complete ~54:A DUAL-COLUMN LC-MS SYSTEM AND METHODS OF USE THEREOF ~71:REGENERON PHARMACEUTICALS, INC., 777 Old Saw Mill River Road, Tarrytown, New York, 10591-6707, United States of America ~72: SHUNHAI WANG~ 33:US ~31:62/624,352 ~32:31/01/2018

2023/05590 ~ Complete ~54:CRYSTAL FORM IV OF MELANOCORTIN RECEPTOR AGONIST COMPOUND, AND PREPARATION METHOD THEREFOR ~71:LG CHEM, LTD., 128, YEOUI-DAERO, YEONGDEUNGPO-GU, SEOUL 07336, REPUBLIC OF KOREA, Republic of Korea ~72: CHUN, Seul Ah;HAM, Jin Ok;KIM, Ji Yoon;KIM, Sung Won;LEE, Ho Yeon;LEE, Sang Dae;PARK, Jong Won~ 33:KR ~31:10-2020-0142400 ~32:29/10/2020

2023/05609 ~ Complete ~54:ALCL1 INHIBITORS AND SYNERGY WITH PARPI ~71:EISBACH BIO GMBH, Am Klopferspitz 19, 82152, Martinsried, Germany ~72: ADRIAN SCHOMBURG;ANDREAS LADURNER;CORINNA LIELEG;GUNNAR KNOBLOCH;PETER SENNHENN;WILLIAM M MENZER~ 33:EP ~31:20211730.5 ~32:03/12/2020

. - APPLIED ON 2023/05/25 -

2023/05623 ~ Complete ~54:A COMPOSITION AND RELATED METHODS OF MANUFACTURE AND USE ~71:DONAGHYS LIMITED, Unit D, 14-16 Sheffield Crescent, Harewood, New Zealand ~72: MARFELL, Jarred;SILVA, Jeremy;YERITSYAN, Karen~ 33:NZ ~31:759005 ~32:08/11/2019;33:NZ ~31:766151 ~32:10/07/2020

2023/05628 ~ Complete ~54:SOCIAL RELATIONSHIP ANALYSIS METHOD AND SYSTEM BASED ON MULTI-MODAL DATA, AND STORAGE MEDIUM ~71:Xiamen Meiya Pico Information Co., Ltd., Meiya Pico Building,12,Guanri Road,2nd Phase of Xiamen Software Park,Xiamen,Fujian,China, Xiamen, People's Republic of China ~72: Chen Cheng;Chen Simeng;Han Mingxi;Peng Chuang;Zhang Hui;Zhao Jianqiang~ 33:CN ~31:2022109714247 ~32:12/08/2022

2023/05645 ~ Complete ~54:4'-SUBSTITUTED ANALOGUES OF FISETIN AND THEIR USE IN THE TREATMENT OF CANCER ~71:JAWAHARLAL NEHRU UNIVERSITY, New Mehrauli Road, Munirka, New Delhi, Delhi, 110067, India;STELLENBOSCH UNIVERSITY, Admin B, Victoria Street, Stellenbosch, Western Cape, 7600, South Africa ~72: AKASH SABARWAL;ARPIT DHEERAJ;CATHERINE HART KASCHULA;RANA PRATAP SINGH~ 33:IN ~31:202021052123 ~32:30/11/2020

2023/05653 ~ Complete ~54:HYPOIMMUNOGENIC BIOTHERAPEUTICS ~71:OSPREY BIOPHARMACEUTICALS, INC., 6175 Nancy Ridge Dr., San Diego, California, 92121, United States of America ~72: RICHARD JAMES GLYNNE;TIGRAN AIVAZIAN~ 33:US ~31:63/136,128 ~32:11/01/2021

2023/05640 ~ Complete ~54:SYSTEM FOR DECENTRALIZED ACQUISITION AND WIRELESS TRANSMISSION OF ACQUIRED DATA FOR USE UNDERGROUND ~71:TECHNISCHE UNIVERSITÄT BERGAKADEMIE FREIBERG, Akademiestrasse 6, Germany ~72: Hans-Günther KRUG;Helmut MISCHO;Tobias KRICHLER~ 33:DE ~31:10 2020 216 221.2 ~32:18/12/2020

2023/05650 ~ Complete ~54:A BANKNOTE STACK TRANSPORT ARRANGEMENT AND A CASH HANDLING MACHINE ~71:SCAN COIN AB, Nordenskiöldsgatan 24, 211 19, Malmö, Sweden ~72: MANFRED JÖNSSON;VICTOR WALLMAN-CARLSSON~ 33:EP ~31:20207124.7 ~32:12/11/2020

2023/05657 ~ Complete ~54:CO-AGONISTS OF THE GLP-1 AND AMYLIN RECEPTORS ~71:Novo Nordisk A/S, Novo Allé, BAGSVÆRD 2880, DENMARK, Denmark ~72: ØSTERGAARD, Søren;HOGENDORF, Wouter Frederik Johan;KODAL, Anne Louise Bank;KRUSE, Thomas;MADSEN, Alice;MADSEN, Johnny;SCHÄFFER (Deceased), Lauge;TORNØE, Christian Wenzel~ 33:EP ~31:20215291.4 ~32:18/12/2020;33:EP ~31:21154668.4 ~32:02/02/2021;33:EP ~31:21179810.3 ~32:16/06/2021

2023/05619 ~ Complete ~54:GASIFICATION METHOD BASED ON UNDERGROUND RAW COAL ~71:Hunan University of Science and Technology, No.2 Taoyuan Road, Yuhu District, Xiangtan City, Hunan Province, 411201, People's Republic of China ~72: Changhe CAI;Ping XIANG;Xiaoqin YANG;Yanming ZHAO;Yunjiang CAO;Zhenghui XIAO~

2023/05622 ~ Complete ~54:FREE BASE CRYSTALLINE FORM OF A COMPLEMENT COMPONENT C5A RECEPTOR ~71:CHEMOCENTRYX, INC., 835 Industrial Road, Suite 600, United States of America ~72: KRASINSKI, Antoni;LUI, Rebecca M.;SINGH, Rajinder;YAU, Kwok;ZENG, Yibin;ZHANG, Penglie~ 33:US ~31:62/932,652 ~32:08/11/2019

2023/05632 ~ Complete ~54:AN ADAPTOR ~71:Fluidra Waterlinx (Pty) Ltd, 5 Kruger Street, Denver, Johannesburg 2094, Gauteng, SOUTH AFRICA, South Africa ~72: VAN DER VYVER, Donovan;VERSTER, Johannes Jacobus~ 33:ZA ~31:2022/05874 ~32:27/05/2022

2023/05642 ~ Complete ~54:ANTI-TSPAN8/ANTI-CD3 BISPECIFIC ANTIBODY AND ANTI-TSPAN8 ANTIBODY ~71:ASTELLAS PHARMA INC., 5-1, Nihonbashi-Honcho 2-chome, Chuo-ku, Tokyo, 1038411, Japan;NATIONAL CANCER CENTER, 1-1, Tsukiji 5-chome, Chuo-ku, Tokyo, 1040045, Japan ~72: DAISUKE YAMAJUKU;FUMIKO CHIWAKI;HIROKI SASAKI;MASATOSHI YURI;MASAYUKI KOMATSU;TAKESHI TSUTSUMI;YOSHIYUKI TENDA;YUKO KUSUZAKI~ 33:JP ~31:2020-189988 ~32:16/11/2020

2023/05651 ~ Complete ~54:FLUIDIZED BED HEAT EXCHANGER AND METHOD ~71:MAGALDI POWER S.P.A., Piazza di Pietra 26, 00186, Roma RM, Italy ~72: FULVIO BASSETTI;MARIO MAGALDI~

2023/05656 ~ Complete ~54:METHOD OF SAFE ADMINISTRATION OF ANTI-TAU ANTIBODY ~71:Janssen Pharmaceutica NV, Turnhoutseweg 30, Beerse, 2340, BELGIUM, Belgium ~72: HENLEY, David;LI, Lingjue;NANDY, Partha;RUIXO, Carlos Pérez~ 33:US ~31:63/105,810 ~32:26/10/2020;33:US ~31:63/250,114 ~32:29/09/2021

2023/05614 ~ Provisional ~54:FLUID SHUT-OFF DEVICE ~71:VICTOR, Marius Riaan, Plot 186, Beyers Naude Drive, South Africa ~72: VICTOR, Marius Riaan~

2023/05618 ~ Provisional ~54:FORTUNE CANDLES ~71:Khanyisane Falake, 47 third avenue, Fairways, South Africa ~72: Khanyisane Falake~

2023/05625 ~ Complete ~54:FITTING HAVING TABBED RETAINER AND OBSERVATION APERTURES ~71:VICTAULIC COMPANY, 4901 Kesslersville Road, United States of America ~72: BOWMAN, Matthew A.;MADARA, Scott D.;SITH, Ahmad;STERNER, Jeffrey Lance~ 33:US ~31:62/336,893 ~32:16/05/2016

2023/05631 ~ Complete ~54:LOCKABLE LATCH ~71:Georg Fischer Rohrleitungssysteme AG, Ebnatstrasse 111, SCHAFFHAUSEN 8200, SWITZERLAND, Switzerland ~72: CANTONI, Flavio;WASETZKI, Maxim~ 33:EP ~31:22 176 399.8 ~32:31/05/2022

2023/05617 ~ Provisional ~54:BLAST CAGE FOR A SAFE ~71:PAYCORP GROUP (PROPRIETARY) LIMITED, Sandhaven Office Park 14 Pongola Crescent Eastgate Ext 17, Sandton, Gauteng, 2199, South Africa ~72: HENDRIK DU TOIT~

2023/05621 ~ Complete ~54:METHOD FOR PREPARING DIACETYL TYPE NATURAL MILK FLAVOR BASE MATERIAL BY MEANS OF ENZYMOLYSIS COUPLED WITH FERMENTATION ~71:Zhongkai University of Agriculture and Engineering, No. 501, Zhongkai Road, Haizhu District, Guangzhou, Guangdong province, People's Republic of China ~72: Bai WeiDong;Chen Qing;Mao Yue;Ren WenBin;Wang Wei;Zhao WenHong~ 33:CN ~31:2022106853233 ~32:16/06/2022

2023/05629 ~ Complete ~54:A METHOD FOR TREATING OR PREVENTING IDIOPATHIC POLYPOIDAL CHOROIDAL VASCULOPATHY (IPCV) ~71:IVERIC BIO, INC., One Penn Plaza, Suite 3520, New York, New York, 10119, United States of America ~72: KOUROUS REZAEI~ 33:US ~31:62/587,126 ~32:16/11/2017

2023/05633 ~ Complete ~54:A DEVICE AND METHOD FOR DETECTING TEXTILE WAVE-ABSORBING PROPERTY ~71:Nantong University, Nantong University, People's Republic of China ~72: GU, Wenyan;JIA, Qi;SUN, Yifei;WU, Yanyi;ZHANG, Maoxian~ 33:CN ~31:202210573677.9 ~32:25/05/2022

2023/05652 ~ Complete ~54:CAMPTOTHECINE ANTIBODY-DRUG CONJUGATES AND METHODS OF USE THEREOF ~71:R.P. SCHERER TECHNOLOGIES, LLC, 112 North Curry Street Carson City, Nevada 89703, United States of America ~72: AYODELE O OGUNKOYA;PENELOPE M DRAKE;STEPAN CHUPRAKOV~ 33:US ~31:63/138,182 ~32:15/01/2021;33:US ~31:63/186,489 ~32:10/05/2021;33:US ~31:63/214,525 ~32:24/06/2021;33:US ~31:63/237,355 ~32:26/08/2021

2023/05639 ~ Complete ~54:ORAL CANNABINOID PRODUCT WITH LIPID COMPONENT ~71:NICOVENTURES TRADING LIMITED, Globe House, 1 Water Street, United Kingdom ~72: ALDERMAN, Steven Lee;GERARDI, Anthony Richard;NESTOR, Timothy Brian;POOLE, Thomas H.;SPIELBAUER, Kristen Ann;ZAWADZKI, Michael Andrew~ 33:US ~31:17/104,926 ~32:25/11/2020

2023/05654 ~ Complete ~54:BYPASS AUXILIARY SYSTEM FOR CLOSED BRAYTON CYCLE HEAT ENGINE SYSTEM, HEAT ENGINE DEVICE, AND REGULATION METHOD THEREFOR ~71:China Nuclear Power Engineering Co., Ltd., No. 117 West Third Ring North Road, Haidian District, BEIJING 100840, CHINA (P.R.C.), People's Republic of China ~72: DING, Liang;DU, Shuhong;HUANG, Chen;LI, Jie;LI, Yafei;LIU, Yaguang;MA, Huiyun;WANG, Xi;XING, Ji;YAO, Hongshuai;YU, Pei~ 33:CN ~31:202011346692.7 ~32:26/11/2020

2023/05638 ~ Complete ~54:MULTIPLE VISCOSITY OIL-IN-WATER COMPOSITION USEFUL AS AN INJECTABLE FILLER AND A SCAFFOLD FOR COLLAGEN GROWTH ~71:LORIA PHARMACEUTICAL, LLC, 10773 NW 58th Street, Suite 751, United States of America ~72: LORIA, Victor~ 33:US ~31:63/136,256 ~32:12/01/2021

2023/05641 ~ Complete ~54:DATA DRIVEN INSURANCE SYSTEM ~71:INSURE IOT (PTY) LTD, 28 Tudor Rose Lodge, 5 Tana Road, SUNNINGHILL GARDENS, Johannesburg 2191, Gauteng, SOUTH AFRICA, South Africa ~72: MURMAN, Christian Theodor~ 33:ZA ~31:2020/07654 ~32:09/12/2020

2023/05648 ~ Complete ~54:PROTECTIVE CAPSULES FOR EARTH MOVING MACHINES HAVING A SLOT ANTENNA ~71:METALOGENIA RESEARCH & TECHNOLOGIES S.L., Àvila 45, 08005, Barcelona, Spain ~72: FERRÁNDIZ BORRAS VICENT;GIMENO TORDERA ALBERT;MARQUEZ LLINAS JORDI;VALLVÉ BERTRAN NIL~ 33:EP ~31:20382939.5 ~32:28/10/2020;33:EP ~31:21382164.8 ~32:25/02/2021

2023/05627 ~ Complete ~54:METHOD AND APPARATUS FOR MULTI-DOMAIN DATA FUSION, AND STORAGE MEDIUM ~71:Xiamen Meiya Pico Information Co., Ltd., Meiya Pico Building,12,Guanri Road,2nd Phase of Xiamen Software Park,Xiamen,Fujian,China, XIamen, People's Republic of China ~72: Lin Wenkai;Wei Chao;Wu Wen;Zhou Chengzu;Zhu Haiyong~ 33:CN ~31:2022105733681 ~32:25/05/2022

2023/05630 ~ Complete ~54:COMPOUNDS, PHARMACEUTICAL COMPOSITIONS, AND METHODS OF PREPARING COMPOUNDS AND OF THEIR USE AS ATR KINASE INHIBITORS ~71:REPARE THERAPEUTICS INC., 7210 Frederick-Banting, Suite 100 St-Laurent, Québec, H4S 2A1, Canada ~72: ABBAS ABDOLI;AUDREY PICARD;CAMERON BLACK;CYRUS M LACBAY;JEAN-FRANÇOIS TRUCHON;LEE FADER;MIGUEL ST-ONGE;PAUL JONES;SHELDON N CRANE;STÉPHANE DORICH;STÉPHANIE LANOIX;VOUY LINH TRUONG~ 33:US ~31:62/752,873 ~32:30/10/2018;33:US ~31:62/877,177 ~32:22/07/2019

2023/05635 ~ Complete ~54:FLUIDIZED BED REACTOR AND ASSOCIATED HYDROPYROLYSIS PROCESSES ~71:SHELL INTERNATIONALE RESEARCH MAATSCHAPPIJ B.V., Carel van Bylandtlaan 30, HR The Hague, Netherlands ~72: HUIZENGA, Pieter~ 33:EP ~31:20215260.9 ~32:18/12/2020

2023/05644 ~ Complete ~54:PROCESS FOR PRODUCTION OF ACETIC ACID AND ACRYLIC ACID FROM WASTE CARBON CONTAINING MATERIALS WITH REDUCED CARBON FOOTPRINT ~71:ENERKEM INC., 1130 Sherbrooke Street, West Montreal, Québec, H3A 2M8, Canada ~72: DAVID LYNCH;IMTIAZ AHMED;PRASHANT KUMAR~ 33:US ~31:63/118,103 ~32:25/11/2020

2023/05647 ~ Complete ~54:PROTEINS FOR THE DETECTION OF SCHISTOSOMA INFECTION ~71:MERCK PATENT GMBH, Frankfurter Strasse 250, 64293, Darmstadt, Germany ~72: ALEX LOUKAS;BEATRICE GRECO;CLAUDE OEUVRAY;JAVIER SOTILLO-GALLEGO;MARK PEARSON~ 33:EP ~31:20204189.3 ~32:27/10/2020

2023/05655 ~ Complete ~54:METHODS OF REDUCING TAU IN HUMAN SUBJECTS ~71:Janssen Pharmaceutica NV, Turnhoutseweg 30, BEERSE 2340, BELGIUM, Belgium ~72: GALPERN, Wendy R.;JACOBS, Tom Lieven K.;LI, Lingjue;NANDY, Partha;TIMMERS, Maarten~ 33:US ~31:63/105,804 ~32:26/10/2020

2023/05659 ~ Complete ~54:WOUND DRESSING ~71:Essity Hygiene and Health Aktiebolag, GÖTEBORG 405 03, SWEDEN, Sweden ~72: SCHÜTZ, Patrick;SCHULZE, Christian~

2023/05615 ~ Provisional ~54:SELF CLEANING WATER AND MUD RECOVERY SYSTEM ~71:TITAN MINING (PTY) LTD, Plot 67, Vlakplaas 20, Tarlton, KRUGERSDORP 1739, Gauteng, SOUTH AFRICA, South Africa ~72: LAWRENCE, Allen Preston~

2023/05636 ~ Complete ~54:NOVEL AEROSOL-GENERATING SUBSTRATE ~71:PHILIP MORRIS PRODUCTS S.A., Quai Jeanrenaud 3, Switzerland ~72: BOVET, Lucien;GOEPFERT, Simon;HILFIKER, Aurore;LANGLET, Delphine~ 33:EP ~31:20204612.4 ~32:29/10/2020

2023/05662 ~ Complete ~54:OPTICAL DISTRIBUTION NETWORK, OPTICAL NETWORK SYSTEM, OPTICAL SPLITTER, AND PORT IDENTIFICATION METHOD FOR OPTICAL SPLITTER ~71:Huawei Technologies Co., Ltd., Huawei Administration Building, Bantian, Longgang District, SHENZHEN 518129, GUANGDONG, CHINA

(P.R.C.), People's Republic of China ~72: DENG, Ning;JIANG, Hengyun;JIN, Chao;WU, Bo~ 33:CN ~31:202011358792.1 ~32:27/11/2020

2023/05620 ~ Complete ~54:INHIBITION METHOD BASED ON THE REGENERATED METHANE SOURCE OF MINES ~71:Hunan University of Science and Technology, No.2 Taoyuan Road, Yuhu District, Xiangtan City, Hunan Province, 411201, People's Republic of China ~72: Changhe CAI;Gaofeng YE;Ping XIANG;Xiaoqin YANG;Yunjiang CAO;Zhenghui XIAO~

2023/05661 ~ Complete ~54:METHODS OF TREATING PSYCHIATRIC DISORDERS IN OBESE PATIENTS WITH BREXPIPRAZOLE ~71:Lake O'Hara LLC, 2012 Seadrift Drive, CORONA DEL MAR 92625 , CA, USA, United States of America ~72: CHOW, Christina;SRINIVASAN, Sundar~ 33:US ~31:17/139,627 ~32:31/12/2020;33:US ~31:17/139,690 ~32:31/12/2020

2023/05649 ~ Complete ~54:CAMERA MODULE AND ELECTRONIC DEVICE COMPRISING SAME ~71:SAMSUNG ELECTRONICS CO., LTD., 129, Samsung-ro, Yeongtong-gu, Suwon-si, Gyeonggi-do, 16677, Republic of Korea ~72: DONGHUN YU;DONGSUNG HUR;HYUNHO YU;YOUNGBOK YU;YOUNGJAE HWANG~ 33:KR ~31:10-2021-0002834 ~32:08/01/2021

2023/05660 ~ Complete ~54:REACTION PRODUCT OF AN ORGANIC AMINE AND GLYCIDOL AND ITS USE AS A FRICTION MODIFIER ~71:Huntsman Petrochemical LLC, 10003 Woodloch Forest Dr., THE WOODLANDS 77380, TX, USA, United States of America ~72: ZHAO, Haibo~ 33:US ~31:63/126,112 ~32:16/12/2020

2023/05616 ~ Provisional ~54:NOCK FOR AN ARROW ~71:SURESIGHT AUTOMATIC (PTY) LTD, 6 Coert Steynberg Street, Van Eck Park, Brakpan, Gauteng, 1459, South Africa ~72: ROGER WILLIAM MACDONALD~

2023/05624 ~ Complete ~54:AMORPHOUS FORM OF A COMPLEMENT COMPONENT C5A RECEPTOR ~71:CHEMOCENTRYX, INC., 835 Industrial Road, Suite 600, United States of America ~72: LELETI, Manmohan Reddy;LUI, Rebecca M.;LUONG, Kenken;SINGH, Rajinder;YAU, Kwok;ZENG, Yibin;ZHANG, Penglie~ 33:US ~31:62/932,644 ~32:08/11/2019

2023/05626 ~ Complete ~54:VENTILATION AND TEMPERATURE CONTROL DEVICE FOR SUPERCAPACITORS ~71:Zhengzhou University of Aeronautics, No.2, Daxue Middle Road, Zhengzhou City, Henan Province, People's Republic of China ~72: CHEN Dongxia;CUI Jiehu;HUO Haibo;LI Mingyu;LIU Erbin;MA Huali;SHAO Li;WANG Xianli;WEI Meng;YU Zhanjun~

2023/05634 ~ Complete ~54:METHOD FOR PREDICTING LABEL DATA OF SAME TYPE, TERMINAL DEVICE AND STORAGE MEDIUM ~71:Xiamen Meiya Pico Information Co., Ltd., Meiya Pico Building,12,Guanri Road,2nd Phase of Xiamen Software Park,Xiamen, People's Republic of China ~72: Bi Yonghui;Huang Kai;Lai Yingnan;Tu Jialin;Zhao Ning;Zhou Xinbo~ 33:CN ~31:202210387042X ~32:14/04/2022

2023/05637 ~ Complete ~54:ELECTRIC GRILL ~71:ACTIVE FOOD SYSTEMS LIMITED, Synergy House, Units 7 to 10 Greenewable Business Park, United Kingdom ~72: CADBURY, George Justin Peter;EDWARDS, Andrew Norman;O'ROURKE, Sam~ 33:GB ~31:2017147.6 ~32:29/10/2020;33:GB ~31:2103717.1 ~32:17/03/2023

2023/05643 ~ Complete ~54:SPEAKER MODULE STRUCTURE AND ELECTRONIC DEVICE COMPRISING SAME ~71:SAMSUNG ELECTRONICS CO., LTD., 129, Samsung-ro, Yeongtong-gu, Suwon-si, Gyeonggi-do, 16677, Republic of Korea ~72: CHANGSHIK YOON;JOONRAE CHO;KIWON KIM;MYUNGCHEOL LEE;TAEEON KIM;YOUNGBAE PARK~ 33:KR ~31:10-2021-0004804 ~32:13/01/2021

2023/05646 ~ Complete ~54:NOVEL COMPOUND, PREPARATION METHOD THEREOF, AND ANTIBIOTIC COMPOSITION COMPRISING SAME ~71:A&J SCIENCE CO. LTD., 80 Cheombok-ro Dong-gu, Daegu, 41061, Republic of Korea ~72: DAHYUN KIM;HEE-JONG HWANG;JUSUK LEE;MARCO CIUFOLINI;YOUNG-JIN SON~ 33:KR ~31:10-2020-0155605 ~32:19/11/2020;33:KR ~31:10-2021-0158467 ~32:17/11/2021

2023/05658 ~ Complete ~54:EZH2 INHIBITION THERAPIES FOR THE TREATMENT OF ANDROGEN RECEPTOR MUTATED PROSTATE CANCERS ~71:Constellation Pharmaceuticals, Inc., 470 Atlantic Ave, Suite 1401, BOSTON 02210, MA, USA, United States of America ~72: BRADLEY, William D.;CUI, Jike;SUN, Kaiming;TROJER, Patrick;WANG, Jing;WU, Rentian~ 33:US ~31:63/115,165 ~32:18/11/2020

. - APPLIED ON 2023/05/26 -

2023/05700 ~ Complete ~54:ESCHERICHIA COLI COMPOSITIONS AND METHODS THEREOF ~71:Pfizer Inc., 66 Hudson Boulevard East, NEW YORK 10001-2192, NY, USA, United States of America ~72: ANDERSON, Annaliesa Sybil;CHORRO, Laurent Oliver;DONALD, Robert George Konrad;LYPOWY, Jacqueline Marie;PAN, Rosalind~ 33:US ~31:63/106,077 ~32:27/10/2020;33:US ~31:63/144,058 ~32:01/02/2021;33:US ~31:63/254,195 ~32:11/10/2021

2023/05668 ~ Provisional ~54:NOVEL SURFACTANT COMPOUNDS ~71:NORTH-WEST UNIVERSITY, 1 Hoffman Street, Joon van Rooy Building, South Africa ~72: MARX, Frans Thomas Ignatius;VENTER, David;VOSLOO, Hermanus, Cornelius, Moolman;YOUNG, Desmond Austin~

2023/05671 ~ Provisional ~54:BANK CARD DESIGN ~71:Sicelo Lawrence Mabasa, 14 Goosen Street, The Orchards, South Africa;Tshiamo Vuma, 14 Goosen Street, The Orchards, South Africa ~72: Sicelo Lawrence Mabasa;Tshiamo Vuma~

2023/05673 ~ Complete ~54:FIREPROOF COATING MATERIAL ~71:WeiFang Jia Cheng Digital Materials Co., Ltd., No. 4961 Yingqiu Street, Economic Development Zone, Changle, Weifang, Shandong, 262400, People's Republic of China ~72: DU, Yunshu;JING, Baihua;LI, Hailiang;MA, Tianfeng;QIU, Faxin;WANG, Bingxin;WANG, Minqing~ 33:CN ~31:202210880106.X ~32:25/07/2022

2023/05684 ~ Complete ~54:A ROBOT ARM HANDLING ROBOT FOR INTELLIGENT WORKSHOPS ~71:Jiangsu College Of Safety Technology, Yucai 1st Road, Jiawang District, Xuzhou City, Jiangsu Province, 221011, People's Republic of China ~72: Liu Erchen~

2023/05682 ~ Complete ~54:TISSUE CULTURE SUBSTRATE COMPOSITION FOR TRICHOSANTHES KIRILOWII ~71:Anhui Science And Technology University, No.9 Donghua Road, Fengyang County, Chuzhou City, Anhui Province, People's Republic of China ~72: Guo weigang;He keqin;Jiao Xiangzheng;Lu xiaomin;Ou Wencai;Wang Xihua;Yang Hao;Zhao junguo~ 33:CN ~31:2023104426892 ~32:20/04/2023

2023/05686 ~ Complete ~54:DEVICE FOR REPLACING POWDER SPREADING SCRAPER OF SELECTIVE LASER MELTING APPARATUS ONLINE AND AUTOMATICALLY ~71:ANHUI ZHONGKE CHUNGU LASER INDUSTRY TECHNOLOGY RESEARCH INSTITUTE CO., LTD, Zhongke Chungu Laser Industrial Park, Fanchang Economic Development Zone, Wuhu City, Anhui Province, 241000, People's Republic of China;TONGLING UNIVERSITY, No. 1335, Fourth Cuihu Road, Tongling, Anhui Province, 244061, People's Republic of China ~72: GAO, Xuesong;LI, Rong;WANG, Dongsheng;XIAO, Meng;ZHANG, Ran;ZHOU, Yan~ 33:CN ~31:202211536713.0 ~32:02/12/2022

2023/05687 ~ Complete ~54:A BARREL FOR USE IN A WALL ANCHOR ~71:ROCBOLT TECHNOLOGIES (PTY) LTD., 30 North Reef Road, Elandsfontein, GERMISTON 1429, Gauteng, SOUTH AFRICA, South Africa ~72: BELLINGHAM, Werner Cornelius;MULLER, Peter~

2023/05677 ~ Complete ~54:DEODORIZING AND BACTERIA-INHIBITING BIOLOGICAL CAT LITTER AND PREPARATION METHOD THEREFOR ~71:Shandong Chongyan Biotechnology Co., Ltd., No. 299, Nanhexi Industrial Park, Taishan District, Tai'an City, Shandong Province, 271039, People's Republic of China ~72: WANG, Cheng~ 33:CN ~31:2022108933228 ~32:27/07/2022

2023/05680 ~ Complete ~54:PESTICIDE SPRAYING DEVICE FOR CORN CULTIVATION ~71:Qiqihar Branch of Heilongjiang Academy of Agricultural Sciences, No. 83, Xinming Street, Jianhua District, Qiqihar City, Heilongjiang Province, 161000, People's Republic of China ~72: DING, Xinying;GONG, Xiujie;HAN, Yehui;HAO, Yubo;HE, Chang'an;HU, Jifang;HUANG, Xinyu;JI, Chunxue;JI, Shengdong;JIN, Xiaochun;JIN, Zhenguo;LI, Donglin;LI, Qingchao;LI, Rulai;LIAN, Yongli;LIU, Yang;LIU, Yue;MA, Baoxin;MA, Bo;QU, Zhongcheng;SHAN, Dapeng;SHAO, Guangzhong;SHAO, Yong;SHI, Yunqiang;SUN, Yinhui;TAN, Kefei;WANG, Junqiang;WANG, Lianxia;WANG, Lida;WANG, Shumao;WANG, Zhen;XU, Ting;XU, Yingying;YANG, Jianfei;YU, Yang;YU, Yunkai;YUAN, Ming;ZHANG, Di;ZHOU, Chao~

2023/05685 ~ Complete ~54:INTELLIGENT EDUCATION AND TEACHING SYSTEM BASED ON THE INTERNET ~71:CHENGDU VOCATIONAL AND TECHNICAL COLLEGE OF INDUSTRY, No. 818, Da 'an Road, Zhengxing Street, Tianfu New District, Chengdu City, Sichuan Province, 610213, People's Republic of China ~72: DING, Tianxia;LI, Shangyong;QIAO, Jianchun;WEI, Xi~

2023/05698 ~ Complete ~54:STABLE CORONAVIRUS PROTEINS AND VACCINE COMPOSITIONS THEREOF ~71:FRED HUTCHINSON CANCER RESEARCH CENTER, 1100 Fairview Ave. N. P.O. Box 19024, United States of America;UNIVERSITY OF WASHINGTON, 4545 Roosevelt Way NE Suite 400, United States of America ~72: BLOOM, Jesse;ELLIS, Daniel;GREANEY, Allison;KING, Neil;STARR, Tyler~ 33:US ~31:63/132,863 ~32:31/12/2020;33:US ~31:63/188,651 ~32:14/05/2021

2023/05703 ~ Complete ~54:ANTIBODY DELIVERY ~71:AC Immune SA, EPFL Innovation Park, Building B, LAUSANNE CH-1015, SWITZERLAND, Switzerland ~72: DEL VAL, Gregorio;NÉVOLTRIS, Damien~ 33:EP ~31:20215823.4 ~32:18/12/2020

2023/05702 ~ Complete ~54:OXYGENATOR OF ORGANIC FLUIDS ~71:Qura S.R.L., Via di Mezzo, 23, MIRANDOLA (IT) 41037, ITALY, Italy ~72: GALAVOTTI, Daniele~ 33:IT ~31:102020000025762 ~32:29/10/2020

2023/05669 ~ Provisional ~54:NOVEL USES OF NOVEL SURFACTANT COMPOUNDS ~71:NORTH-WEST UNIVERSITY, 1 Hoffman Street, Joon van Rooy Building, South Africa ~72: MARX, Frans Thomas Ignatius;OTTO, Daniel Petrus;SMIT, Frans Johannes;VOSLOO, Hermanus Cornelius Moolman;WIESE, Ettiene Hugo~

2023/05681 ~ Complete ~54:CULTURE MEDIUM FOR VIRUS-FREE POTATO TISSUES ~71:Anhui Science And Technology University, No.9 Donghua Road, Fengyang County, Chuzhou City, Anhui Province, People's Republic of China ~72: Dong Xinde;He keqin;Lu xiaomin;Zhang Xueping~ 33:CN ~31:2023104427325 ~32:20/04/2023

2023/05683 ~ Complete ~54:SYSTEM AND METHOD FOR ANALYSIS OF HUMAN MOVEMENT AND SUGGESTIONS OF AMENDMENT IF ANY ~71:Geetanjali Vinayak Kale, A-5, Swanand Society, Lane-3, Sahakar Nagar-2, Pune, MAHARASHTRA, 411009, India;Madhuri Sachin Wakode, C-702, Amrutvel, Sai nagar, near SBI, Waraje, Pune, MAHARASHTRA, 411058, India;Niranjan Shahaji Deokule, House No-23, Lane No-6, Jaymala Nagar, Old Sangavi, Pune, MAHARASHTRA, 411027, India;Pravin Ramdas Patil, B2, 305 Rajyog C housing society, near Muralidhar Laygude Hospital, Lagad Mala, Vadhaon Khurd, Behind Lokmat Press, Sinhgad Road, Pune, MAHARASHTRA, 411041, India;Priyanka Ravindra Chaudhari, 28, Laxmi Nagar, Jalgaon, Pune, MAHARASHTRA, 425001, India;Vinayak K. Bairagi, AISSMS Institute of Information Technology, Kennedy Road,

Near RTO, Pune, MAHARASHTRA, 411001, India ~72: Geetanjali Vinayak Kale;Madhuri Sachin Wakode;Niranjan Shahaji Deokule;Pravin Ramdas Patil;Priyanka Ravindra Chaudhari;Vinayak K. Bairagi~

2023/05690 ~ Complete ~54:SUPPRESSION-REPLACEMENT GENE THERAPY ~71:MAYO FOUNDATION FOR MEDICAL EDUCATION AND RESEARCH, 200 First Street S.W., Rochester, United States of America ~72: ACKERMAN, Michael J;BAINS, Sahej;DOTZLER, Steven M;GENDRON, William;KIM, Chang Sung;TESTER, David J~ 33:US ~31:63/132,316 ~32:30/12/2020;33:US ~31:63/179,083 ~32:23/04/2021;33:US ~31:63/208,556 ~32:09/06/2021;33:US ~31:63/270,388 ~32:21/10/2021

2023/05667 ~ Provisional ~54:BULLETPROOF PILLOW ~71:IMPORT KALEIDOSCOPE CC, 14 Avocet Corner, Hazeldean Office Park, South Africa ~72: NAUDÉ, Hendrik Petrus;VAN SCHALKWYK, Marius Wilken~

2023/05674 ~ Complete ~54:BIOLOGICAL STEM CELL AGENT, AND PREPARATION METHOD AND APPLICATION THEREOF ~71:Hebei Chemical and Pharmaceutical College, No. 88, Fangxing Road, Yuhua District, Shijiazhuang City, Hebei Province, 050026, People's Republic of China ~72: LIU, Haizhen~

2023/05678 ~ Complete ~54:PORTABLE PSAMMOPHYTE INCUBATOR ~71:Gansu Desert Control Research Institute, No.390, North Binhe West Road, Anning District, Lanzhou City, Gansu Province, People's Republic of China ~72: CHEN Fang;WEI Linyuan;ZHANG Dekui;ZHANG Zhong~ 33:CN ~31:2023210784999 ~32:08/05/2023

2023/05693 ~ Complete ~54:ELEMENT FOR SEPARATING A LIQUID MEDIUM WITH HIGH PARIETAL SHEAR STRESS ~71:TECHNOLOGIES AVANCEES ET MEMBRANES INDUSTRIELLES, ZA Les Laurons, 26110, Nyons, France ~72: JÉRÔME ANQUETIL;PHILIPPE LESCOCHE~ 33:FR ~31:FR2012009 ~32:23/11/2020

2023/05670 ~ Provisional ~54:A BELT CLEANER ~71:COMPOSITE CONVEYOR EQUIPMENT COMPANY (PTY) LIMITED, 4 Van Lingen Street, South Germiston Factory Park, Germiston South, South Africa ~72: ROBERT GERD EICHHORN~

2023/05697 ~ Complete ~54:BIOMASS DIRECT REDUCED IRON ~71:TECHNOLOGICAL RESOURCES PTY. LIMITED, Level 43, 120 Collins Street, Melbourne, Victoria 3000, Australia ~72: IAIN WILLIAM FARR;MICHAEL BUCKLEY;RODNEY JAMES DRY~ 33:AU ~31:2020904332 ~32:24/11/2020

2023/05675 ~ Complete ~54:CONTROL METHOD AND SYSTEM FOR SMART HOME APPLIANCES, ELECTRONIC APPARATUS AND MEDIUM ~71:Hebei Chemical and Pharmaceutical College, No. 88, Fangxing Road, Yuhua District, Shijiazhuang City, Hebei Province, 050026, People's Republic of China ~72: LIU, Haimei~

2023/05701 ~ Complete ~54:METHOD OF AND ANALYSER FOR THE OPTICAL ANALYSIS OF A LIQUID CONTAINING A DISSOLVED GAS ~71:FOSS Analytical A/S, Nils Foss Alle 1, HILLEROED 3400, DENMARK, Denmark ~72: ANDERSEN, Hans Villemoes;JUHL, Henrik Vilstrup~ 33:DK ~31:PA202001232 ~32:02/11/2020

2023/05704 ~ Complete ~54:CONJUGATED FUMONISIN TO PROTECT AGAINST MYCOTOXICOSIS ~71:Intervet International B.V., Wim De Koerverstraat 35, BOXMEER 5831 AN, THE NETHERLANDS, Netherlands ~72: KOOIJMAN, Sietske;SEGERS, Ruud Philip Antoon Maria;WITVLIET, Maarten Hendrik~ 33:EP ~31:20216323.4 ~32:22/12/2020

2023/05705 ~ Complete ~54:RET INHIBITOR COMBINATION THERAPY FOR TREATING CANCER ~71:Loxo Oncology, Inc., 281 Tresser Blvd., STAMFORD 06901, CT, USA, United States of America ~72: STANCATO, Louis Frank~ 33:US ~31:63/127,513 ~32:18/12/2020

2023/05706 ~ Complete ~54:OSCILLATING FLUIDIZED BED OLIGONUCLEOTIDE SYNTHESIZER ~71:Eli Lilly and Company, Lilly Corporate Center, INDIANAPOLIS 46285, IN, USA, United States of America ~72: BRADEN, Timothy Michael;JOHNSON, Martin David;SUN, Wei-Ming;WEBSTER, Luke Philip;WEI, Yufei;ZELINSKI, Jessica Ann~ 33:US ~31:63/127,269 ~32:18/12/2020

2023/05707 ~ Complete ~54:PROCESS FOR THE DECOMPOSITION OF POLYURETHANE ~71:NEVEON GERMANY GMBH, Hagenauer Str. 42, Germany ~72: BETTINGER, Herbert~ 33:DE ~31:10 2020 131 581.3 ~32:27/11/2020

2023/05709 ~ Provisional ~54:ANTI-HIJACKING UNIT AND MOBILISER MAGNET ~71:SAMUEL TEBOGO PHETLA, 50048, ZAKHENI SEC, KWA-MHLANGA, South Africa ~72: SAMUEL TEBOGO PHETLA ~

2023/05708 ~ Complete ~54:CRYSTALLISER, METHOD FOR CRYSTALLISING AND USE OF THE CRYSTALLISER IN PERFORMING THE METHOD ~71:YARA INTERNATIONAL ASA, Drammensveien 131 0277, Norway ~72: BUJALSKI, Jakub;LIER, Olav;LOUWE, Robertus~ 33:EP ~31:20216950.4 ~32:23/12/2020

2023/05676 ~ Complete ~54:METHOD FOR SEPARATING AND PURIFYING GLUCOCORTICOIDS IN URINE BY ONLINE TWO-DIMENSIONAL SEMI-PREPARATIVE LIQUID CHROMATOGRAPHY ~71:SHANGHAI UNIVERSITY OF SPORT, 399 Qingyuan Ring Road, Yangpu District, Shanghai, People's Republic of China ~72: LIU Bing;LONG Ziyang;WANG Yirang~

2023/05679 ~ Complete ~54:NUCLEIC ACID APTAMER OF HELICOBACTER PYLORI FOR DETECTING HELICOBACTER PYLORI AND SCREENING METHOD AND APPLICATION THEREOF ~71:TANG Xiaolei, Kangfu Road 10#, Jinghu District, Wuhu City, Anhui Province, People's Republic of China ~72: HU Feng;HUA Ying;TANG Xiaolei;WU Yanhong;XIONG Yueling;ZHANG Linyuan~

2023/05688 ~ Complete ~54:NATURAL GAS HYDROGEN-DOPED MIXER ~71:OKAY ENERGY TECHNOLOGY (TIANJIN) CO., LTD, ROOM 1-602, BUILDING B-4, NO.16, HAITAI DEVELOPMENT FIFTH ROAD, HUAYUAN INDUSTRIAL ZONE (OUTSIDE THE RING), Tianjin, 300392, People's Republic of China ~72: HAN, Min;HAN, Tieling;ZHAO, Liankuan~ 33:CN ~31:202210497111.2 ~32:09/05/2022

2023/05689 ~ Complete ~54:CATALYST AND METHOD FOR SULFUR-TOLERANT SHIFT CATALYTIC REACTION ~71:CHINA PETROLEUM & CHEMICAL CORPORATION, No.22 Chaoyangmen North Street, Chaoyang District, People's Republic of China;SINOPEC QILU COMPANY, No.15 Huangong Road, Linzi District, Zibo, People's Republic of China ~72: BAI, Zhimin;JIANG, Jianbo;WANG, Hao;WANG, Min;XU, Jinshan;XUE, Hongxia;YU, Hantao~ 33:CN ~31:202011166843.0 ~32:27/10/2020

2023/05692 ~ Complete ~54:CURRENCY MANAGEMENT SYSTEM AND ELECTRONIC SIGNATURE DEVICE ~71:GVE LTD., 13-1, Nihonbashi-Kabutocho, Chuo-ku, Tokyo, 1030026, Japan ~72: KEITA TAKAMATSU;KOJI FUSA;YU KUSAKABE~

2023/05695 ~ Complete ~54:TEMPERATURE CONTROL SYSTEM FOR DEVICE AND TEMPERATURE CONTROL METHOD ~71:CHANGCHUN JETTY AUTOMOTIVE TECHNOLOGY CO., LTD., No. 957, Shunda Road, High-tech Development Zone, Chaoyang District Changchun, Jilin 130000, People's Republic of China ~72: CHAO WANG~ 33:CN ~31:202011286748.4 ~32:17/11/2020

2023/05691 ~ Complete ~54:METHOD, INCLUDING A HYDROGENATION STEP, FOR TREATING PLASTIC PYROLYSIS OILS ~71:IFP ENERGIES NOUVELLES, 1 et 4 avenue de Bois-Préau, France;REPSOL S.A., C/ Mendez Alvaro, Spain ~72: BONNARDOT, Jérôme;DECOTTIGNIES, Dominique;ESCUDERO CASTEJON, Lidia;RIBAS SANGÜESA, Iñigo;WEISS, Wilfried~ 33:FR ~31:FR2100026 ~32:04/01/2021

2023/05699 ~ Complete ~54:COFFEE BREWING APPARATUS ~71:Société des Produits Nestlé S.A., Avenue Nestlé 55, VEVEY 1800, SWITZERLAND, Switzerland ~72: BLUNIER, Jean Daniel;CALDERONE, Roberto Angelo;FLICK, Jean Marc~ 33:EP ~31:20205487.0 ~32:03/11/2020

2023/05694 ~ Complete ~54:ELECTRONIC DEVICE COMPRISING ANTENNA ~71:SAMSUNG ELECTRONICS CO., LTD., 129, Samsung-ro, Yeongtong-gu, Suwon-si, Gyeonggi-do, 16677, Republic of Korea ~72: CHANKYU AN;HIMCHAN YUN;JAEBONG CHUN;NAKCHUNG CHOI;SOONHO HWANG;SUNGKOO PARK~ 33:KR ~31:10-2020-0166365 ~32:02/12/2020

2023/05696 ~ Complete ~54:METHOD FOR SYNTHESISING FUNCTIONALISED MERCAPTANS UNDER H2S PRESSURE ~71:ARKEMA FRANCE, 420, rue d'Estienne d'Orves, 92700, Colombes, France ~72: ARNAUD DESSOMMES;GEORGES FREMY;JEAN-CHRISTOPHE LEC~ 33:FR ~31:FR2012665 ~32:04/12/2020

ASSIGNMENTS IN TERMS OF SECTION 60-REGULATIONS 58-60 AND 64 (1)

Application Number	Assignor	Assignee
2011/02919	DE MANTON CC	MACCMARK DESIGN (PTY) LTD
2022/01958	BAISE CITY ROXING CHEMICAL INDUSTRY LTD.	GUANGXI BAISE DONGXIN CHEMICAL CO., LTD.
2011/03360	BOEHRINGER INGELHEIM INTERNATIONAL GMBH	INXMED (HONG KONG) LIMITED
2018/01091	EBERHARD KARLS UNIVERSITAET TUEBINGEN MEDIZINISCHE	PRIME VECTOR TECHNOLOGIES GMBH
2022/08334	VALENT U.S.A. LLC	SUMITOMO CHEMICAL COMPANY, LIMITED
2022/04261	VALENT U.S.A. LLC	SUMITOMO CHEMICAL COMPANY, LIMITED
2014/01493	CHARITE UNIVERSITATSMEDIZIN BERLIN	PROF. DR. MATTHIAS TAUPITZ, DR. SUSANNE WAGNER and DR. JORG SCHNORR
2020/00186	CABEAU, INC.	AZUROUS, INC.
2012/00374	DSM IP ASSETS B.V.	DSM PROTECTIVE MATERIALS B.V
2014/03409	DSM IP ASSETS B.V.	DSM PROTECTIVE MATERIALS B.V
2014/04137	DSM IP ASSETS B.V.	DSM PROTECTIVE MATERIALS B.V
2019/00927	DSM IP ASSETS B.V.	DSM PROTECTIVE MATERIALS B.V
2010/05851	DEPUY ORTHOPADIE GMBH	DEPUY INTERNATIONAL LTD, JOHNSON & JOHNSON MEDICAL GMBH and IMORPHICS LTD.,
2009/09034	TREOFAN GERMANY GMBH & CO. KG	INNOVIA FILMS AMERICA, INC.
2022/11382	CHINA UNIVERSITY OF MINING & TECHNOLOGY-BEIJING	GUIZHOU SCIENCE OF ENGINEERING AND APPLIED TECHNOLOGY
2014/03372	FREDAX AB	JANSSEN BIOTECH, INC.
2021/01678	METACRINE, INC.	ORGANOVO, INC.
2018/01750	METACRINE, INC.	ORGANOVO, INC.
2019/05927	METACRINE, INC.	ORGANOVO, INC.
2017/02643	CELGENE CAR LLC	BRISTOL-MYERS SQUIBB COMPANY
2022/03906	NIMER & PARTNERS, METAL INDUSTRIES & TRADING LLC	CHADWICK, RICHARD DOUGLAS
2011/03803	H. LUNDBECK A/S	VITAERIS INC.
2014/05616	HENTIQ 1627 (PTY) LTD t/a TOOLTECH PLASTICS	SONU GROUP PROPRIETARY LIMITED

Application Number	Assignor	Assignee
2014/05616	HENTIQ 1627 (PTY) LTD t/a TOOLTECH PLASTICS	SONU GROUP PROPRIETARY LIMITED
2019/02366	ENGMAB SARL	ENGMAB BETA HOLDINGS LLC
2019/02366	ENGMAB BETA HOLDINGS LLC	BRISTOL-MYERS SQUIBB COMPANY
2018/00435	ENGMAB SARL	ENGMAB BETA HOLDINGS LLC
2018/00435	ENGMAB BETA HOLDINGS LLC	BRISTOL-MYERS SQUIBB COMPANY
2013/08445	ESTETRA S.P.R.L.	MITHRA R&D SA
2013/08446	ESTETRA S.P.R.L.	MITHRA R&D SA
2015/07758	AGROSAVFE N.V.	KATHOLIEKE UNIVERSITEIT LEUVEN
2015/07757	AGROSAVFE N.V.	KATHOLIEKE UNIVERSITEIT LEUVEN
2022/10171	ARGENX BENELUX BV	ARGENX BV
2021/04815	THE COMMISSARIAT A L'ENERGIE ATOMIQUE ET AUX ENERGIES ALTERNATIVES	DAVEY BICKFORD
2021/04597	THE COMMISSARIAT A L'ENERGIE ATOMIQUE ET AUX ENERGIES ALTERNATIVES	DAVEY BICKFORD
2018/02617	KREISEL ELECTRIC GMBH & CO KG	JOHN DEERE ELECTRIC POWERTRAIN LLC
2019/02065	METSO SWEDEN AB	METSO MINERALS OY
2019/02064	METSO SWEDEN AB	METSO MINERALS OY
2021/09434	FARMOBILE LLC	AGI SURETRACK LLC
2021/06852	FARMOBILE LLC	AGI SURETRACK LLC
2010/07106	FLUID TREATMENT LIMITED	CONCRETE TREATMENTS NZ LIMITED
2020/07482	ANJI PHARMA (US) LLC	ANJI PHARMACEUTICALS INC.
2018/08410	SALTUS MINING AFRICA (PTY) LTD	COMPRITE MINING PTY LTD
2018/03202	SMITH INTERNATIONAL	SCHLUMBERGER TECHNOLOGY B.V.
2023/00325	AQUAPAK POLYMERS LIMITED	AQUAPAK IP LIMITED
2023/00326	AQUAPAK POLYMERS LIMITED	AQUAPAK IP LIMITED
2005/01989	NORTON, ALAN ERIC	THE A&K BUSINESS TRUST
2005/01989	CRUNDWELL, FRANK KENNETH	THE MEISIESVLEI FAMILY TRUST
2005/01989	THE A&K BUSINESS TRUST and THE MEISIESVLEI FAMILY TRUST	GEOBIOTICS, LLC
2005/01989	GEOBIOTICS, LLC	THE A&K BUSINESS TRUST and THE MEISIESVLEI FAMILY TRUST
2021/06146	EVONIK FIBRES GMBH, EVONIK CANADA INC. EVONIK CORPORATION	EVONIK OPERATIONS GMBH
2011/05590	MORTON ALAN	COSTA LAMBRIANOS (PTY) LTD
2021/03208	WARR, ERIC HOWELL CHARLES	MEDIFACE TECHNOLOGY PTY LTD
2019/02269	QUINCE THERAPEUTICS, INC.	LIGHTHOUSE PHARMACEUTICALS, INC.
2014/04380	THULILE MTHETHWA	MEMEZA SHOUT (PTY) LTD
2007/03629	BIOGLOBAL LIMITED	SHENZHEN BIOGLOBAL AGRICULTURAL SCIENCE CO. LTD
2006/02560	BIOGLOBAL LIMITED	SHENZHEN BIOGLOBAL AGRICULTURAL SCIENCE CO. LTD
2012/08141	OTSUKA PHARMACEUTICAL CO., LTD.	GW PHARMA LTD.
2014/02207	OTSUKA PHARMACEUTICAL	GW PHARMA LTD.

Application Number	Assignor	Assignee
	CO., LTD.	
2009/06911	METSO MINERALS (WEAR PROTECTION) AB	NORDBERG MILLS (SWEDEN) AB
2009/06911	NORDBERG MILLS (SWEDEN) AB	METSO MINERALS (SWEDEN) AB
2009/06911	METSO SWEDEN AB	METSO MINERALS OY
2020/01568	TAKEDA PHARMACEUTICAL COMPANY LIMITED	OAK HILL BIO LIMITED
2012/00373	OTSUKA PHARMACEUTICAL CO., LTD.	GW PHARMA LTD.
2007/02776	METSO SWEDEN AB	METSO MINERALS OY
2014/04535	METSO SWEDEN AB	METSO MINERALS OY
2021/06070	YUMANITY, INC.	JANSSEN PHARMACEUTICA N.V.
2020/06073	YUMANITY, INC.	JANSSEN PHARMACEUTICA N.V.
2019/04501	YUMANITY, INC.	JANSSEN PHARMACEUTICA N.V.
2008/00075	METSO SWEDEN AB	METSO MINERALS OY
2008/01156	METSO SWEDEN AB	METSO MINERALS OY
2016/00741	METSO SWEDEN AB	METSO MINERALS OY
2012/00283	METSO SWEDEN AB	METSO MINERALS OY
2021/07892	YUMANITY, INC.	JANSSEN PHARMACEUTICA N.V.

CHANGE OF NAME IN TERMS OF REGULATION 39

Application Number	In the name of	New name
2020/03100	JACOB HOLM & SONS AG	GLATFELTER HOLDING (SWITZERLAND) AG
2022/01138	HUBEI SURPASS SUN NEW ENERGY TECHNOLOGY CO., LTD	BORGWARNER NEW ENERGY (XIANGYANG)CO., LTD.
2020/05452	ODFJELL PARTNERS INVEST LTD	ODFJELL TECHNOLOGY INVEST LTD
2022/10940	ODFJELL PARTNERS INVEST LTD	ODFJELL TECHNOLOGY INVEST LTD
2012/00374	DSM PROTECTIVE MATERIALS B.V	AVIENT PROTECTIVE MATERIALS B.V.
2014/03409	DSM PROTECTIVE MATERIALS B.V	AVIENT PROTECTIVE MATERIALS B.V.
2014/04137	DSM PROTECTIVE MATERIALS B.V	AVIENT PROTECTIVE MATERIALS B.V.
2014/00927	DSM PROTECTIVE MATERIALS B.V	AVIENT PROTECTIVE MATERIALS B.V.
2022/10171	ARGENX IIP BV	ARGENX BENELUX BV
2019/02065	METSO MINERALS OY	METSO OUTOTEC FINLAND OY
2019/02064	METSO MINERALS OY	METSO OUTOTEC FINLAND OY
2018/08140	ADICET BIO, INC.	ADICET THERAPEUTICS, INC.
2022/06488	ADICET BIO, INC.	ADICET THERAPEUTICS, INC.
2021/02384	ADICET BIO, INC.	ADICET THERAPEUTICS, INC.
2021/02324	ADICET BIO, INC.	ADICET THERAPEUTICS, INC.
2020/03097	ADICET BIO, INC.	ADICET THERAPEUTICS, INC.

Application Number	In the name of	New name
2017/03505	ADICET BIO, INC.	ADICET THERAPEUTICS, INC.
2010/07106	CONCRETE TREATMENTS NZ LIMITED	CT CIVIL LIMITED
2017/08260	K + S CHILE S.A.	SOCIEDAD PUNTA DE LOBOS S.A.
2012/08904	SILFORM TECHNOLOGIES LIMITED	CHANGEOVER TECHNOLOGIES LIMITED
2021/01944	TRUCK ACCESSORIES GROUP, LLC	LEER GROUP
2021/01943	TRUCK ACCESSORIES GROUP, LLC	LEER GROUP
2021/01935	TRUCK ACCESSORIES GROUP, LLC	LEER GROUP
2022/01331	TRUCK ACCESSORIES GROUP, LLC	LEER GROUP
2022/03935	TRUCK ACCESSORIES GROUP, LLC	LEER GROUP
2022/03932	TRUCK ACCESSORIES GROUP, LLC	LEER GROUP
2022/04262	TRUCK ACCESSORIES GROUP, LLC	LEER GROUP
2019/02269	CORTEXYME, INC.	QUINCE THERAPEUTICS, INC.
2009/06911	METSO MINERALS (SWEDEN) AB	METSO SWEDEN AB
2009/06911	METSO MINERALS OY	METSO OUTOTEC FINLAND OY
2016/05030	AURIGENE DISCOVERY TECHNOLOGIES LIMITED	AURIGENE ONCOLOGY LIMITED
2019/03041	AURIGENE DISCOVERY TECHNOLOGIES LIMITED	AURIGENE ONCOLOGY LIMITED
2019/06739	AURIGENE DISCOVERY TECHNOLOGIES LIMITED	AURIGENE ONCOLOGY LIMITED
2020/07273	AURIGENE DISCOVERY TECHNOLOGIES LIMITED	AURIGENE ONCOLOGY LIMITED
2020/07274	AURIGENE DISCOVERY TECHNOLOGIES LIMITED	AURIGENE ONCOLOGY LIMITED
2020/07275	AURIGENE DISCOVERY TECHNOLOGIES LIMITED	AURIGENE ONCOLOGY LIMITED
2020/07276	AURIGENE DISCOVERY TECHNOLOGIES LIMITED	AURIGENE ONCOLOGY LIMITED
2020/07022	WORG PHARMACEUTICALS (HANGZHOU) CO., LTD.	WORG PHARMACEUTICALS (ZHEJIANG) CO., LTD.
2007/02776	METSO MINERALS (SWEDEN) AB	METSO SWEDEN AB
2007/02776	METSO MINERALS OY	METSO OUTOTEC FINLAND OY
2014/04535	METSO MINERALS (SWEDEN) AB	METSO SWEDEN AB
2014/04535	METSO MINERALS OY	METSO OUTOTEC FINLAND OY
2021/06070	YUMANITY THERAPEUTICS, INC.	YUMANITY, INC.
2020/06073	YUMANITY THERAPEUTICS, INC.	YUMANITY, INC.
2019/04501	YUMANITY THERAPEUTICS, INC.	YUMANITY, INC.

Application Number	In the name of	New name
2008/00075	METSO MINERALS (SWEDEN) AB	METSO SWEDEN AB
2008/00075	METSO MINERALS OY	METSO OUTOTEC FINLAND OY
2008/01156	METSO MINERALS (SWEDEN) AB	METSO SWEDEN AB
2008/01156	METSO MINERALS OY	METSO OUTOTEC FINLAND OY
2016/00741	METSO MINERALS (SWEDEN) AB	METSO SWEDEN AB
2016/00741	METSO MINERALS OY	METSO OUTOTEC FINLAND OY
2012/00283	METSO MINERALS (SWEDEN) AB	METSO SWEDEN AB
2012/00283	METSO MINERALS OY	METSO OUTOTEC FINLAND OY
2021/07892	YUMANITY THERAPEUTICS, INC.	YUMANITY, INC.
2022/07391	WORG PHARMACEUTICALS (HANGZHOU) CO., LTD.	WORG PHARMACEUTICALS (ZHEJIANG) CO., LTD.
2022/01468	WORG PHARMACEUTICALS (HANGZHOU) CO., LTD.	WORG PHARMACEUTICALS (ZHEJIANG) CO., LTD.
2020/00882	WORG PHARMACEUTICALS (HANGZHOU) CO., LTD.	WORG PHARMACEUTICALS (ZHEJIANG) CO., LTD.
2019/04384	WORG PHARMACEUTICALS (HANGZHOU) CO., LTD.	WORG PHARMACEUTICALS (ZHEJIANG) CO., LTD.
2017/04464	WORG PHARMACEUTICALS (HANGZHOU) CO., LTD.	WORG PHARMACEUTICALS (ZHEJIANG) CO., LTD.
2019/04386	WORG PHARMACEUTICALS (HANGZHOU) CO., LTD.	WORG PHARMACEUTICALS (ZHEJIANG) CO., LTD.
2019/04385	WORG PHARMACEUTICALS (HANGZHOU) CO., LTD.	WORG PHARMACEUTICALS (ZHEJIANG) CO., LTD.
2015/04986	WORG PHARMACEUTICALS (HANGZHOU) CO., LTD.	WORG PHARMACEUTICALS (ZHEJIANG) CO., LTD.
2015/03127	WORG PHARMACEUTICALS (HANGZHOU) CO., LTD.	WORG PHARMACEUTICALS (ZHEJIANG) CO., LTD.
2015/04987	WORG PHARMACEUTICALS (HANGZHOU) CO., LTD.	WORG PHARMACEUTICALS (ZHEJIANG) CO., LTD.
2010/02997	WORG PHARMACEUTICALS (HANGZHOU) CO., LTD.	WORG PHARMACEUTICALS (ZHEJIANG) CO., LTD.
2010/01748	WORG PHARMACEUTICALS (HANGZHOU) CO., LTD.	WORG PHARMACEUTICALS (ZHEJIANG) CO., LTD.

PATENT LICENSES IN TERMS OF SECTION 60-REGULATIONS 58-60 AND 64

Application Number	Licensor	Licensee
2005/01989	THE A&K BUSINESS TRUST and THE MEISIESVLEI FAMILY TRUST	TECHNOLOGICAL RESOURCES PTY. LIMITED
2018/06770	CANCER RESEARCH ECHNOLOGY LIMITED	CRT PIONEER FUND LP
2018/06770	CRT PIONEER FUND LP	STEMLINE THERAPEUTICS, INC.

Application Number	Licensor	Licensee
2020/05432	DJ THERAPEUTICS LLC	LOXO ONCOLOGY, INC.

PATENT APPLICATIONS ABANDONED OR WITHDRAWN

Application Number	Not Open	Date
2022/06225	WITHDRAWN	12/05/2023

APPLICATION FOR THE RESTORATION OF A LAPSED PATENT UNDER SECTION 47 OF THE ACT

Notice is hereby given that **DYCLAR GMBH,** whose address for service is **SIBANDA & ZANTWIJK, JOHANNESBURG** has applied to the registrar for the restoration of Patent No **2021/05476** entitled **METHOD OF PURIFYING NATURAL WATER AND WASTEWATER**, dated **31/07/2019**, which lapsed on **31/07/2022** owing to the non-payment of the prescribed renewal fee.

Any person may oppose the restoration of the patent by lodging form P19 within two months of the date of this advertisement.

Notice is hereby given that **IRENE ELIZABETH SNYMAN,** whose address for service is **APS VAN DER MERWE, NOORDBRUG** has applied to the registrar for the restoration of Patent No **2006/03135** entitled **SKIN BURN TREATMENT OINTMENT**, dated **01/10/2004**, which lapsed on **01/10/2021** owing to the non-payment of the prescribed renewal fee.

Any person may oppose the restoration of the patent by lodging form P19 within two months of the date of this advertisement.

Notice is hereby given that **AFFINOR GROWERS INC**, whose address for service is **RADEMEYER ATTORNEYS, RANDBURG** has applied to the registrar for the restoration of Patent No **2021/01892** entitled **VERTICAL GROWING TOWER FOR AUTOMATED HORTICULTURE AND AGRICULTURE**, dated **21/08/2019**, which lapsed on **21/08/2022** owing to the non-payment of the prescribed renewal fee.

Any person may oppose the restoration of the patent by lodging form P19 within two months of the date of this advertisement.

Notice is hereby given that **HUTCHINGS MARK ROBERT CHARLES**, whose address for service is **MARK HUTCHINGS, JOHANNESBURG** has applied to the registrar for the restoration of Patent No **2013/07925** entitled

AN INCLINED IDLER FOR USE IN A CONVEYOR BELT SYSTEM AND TO SUCH A CONVEYOR BELT SYSTEM, dated **23/10/2013**, which lapsed on **23/10/2017** owing to the non-payment of the prescribed renewal fee.

Any person may oppose the restoration of the patent by lodging form P19 within two months of the date of this advertisement

---

THE PATENTS ACT, No. 57 OF 1978

VOLUNTARY SURRENDER OF A PATENT UNDER SECTION 64 (1), REGULATION 67 OF THE ACT

No records available

APPLICATIONS TO AMEND SPECIFICATION

THE PATENTS ACT, 1978

APPLICATIONS TO AMEND SPECIFICATION

Applicant: MICROSOFT TECHNOLOGY LICENSING, LLC One Microsoft Way, Redmond, Washington, 98052-6399. Request permission to amend the specification of letters patent no: **2022/01948** of 17/06/2020 for **DEFERRING CACHE STATE UPDATES IN A NON-SPECULATIVE CACHE MEMORY IN A PROCESSOR-BASED SYSTEM IN RESPONSE TO A SPECULATIVE DATA REQUEST UNTIL THE SPECULATIVE DATA REQUEST BECOMES NON-SPECULATIVE.**

A copy of the original specification on which the proposed amendment is indicated in red, is now available for public inspection at the Patent Office.

Any notice of opposition (on Patent Form 19) must be lodged at the Patent Office within two months from the date hereof.

Registrar of Patents

Applicant: NOVARTIS AG 131 Front Street, P O BOX HM 2899, Hamilton, HM LX. Request permission to amend the specification of letters patent no: **2015/06060** of **20/08/2015** for **ORAL FORMULATIONS OF DEFERASIROX.**

A copy of the original specification on which the proposed amendment is indicated in red, is now available for public inspection at the Patent Office.

Any notice of opposition (on Patent Form 19) must be lodged at the Patent Office within two months from the date hereof.

Registrar of Patents

Applicant: INNOVATION TECHNOLOGIES, INC. 1665 Lakes Parkway, Suite 102, Lawrenceville GA 30043. Request permission to amend the specification of letters patent no: **2016/03885** of **08/06/2016** for **MATERIALS AND METHODS FOR CONTROLLING INFECTIONS.**

A copy of the original specification on which the proposed amendment is indicated in red, is now available for public inspection at the Patent Office.

Any notice of opposition (on Patent Form 19) must be lodged at the Patent Office within two months from the date hereof.

Registrar of Patents

Applicant: WESTINGHOUSE AIR BRAKE TECHNOLOGIES CORPORATION 1001 Air Brake Avenue Wilmerding, PA 15148. Request permission to amend the specification of letters patent no: **2018/02186** of **04/04/2018** for **HERMAPHRODITIC SEALED POWER CONNECTOR FOR RAIL APPLICATIONS.**

A copy of the original specification on which the proposed amendment is indicated in red, is now available for public inspection at the Patent Office.

Any notice of opposition (on Patent Form 19) must be lodged at the Patent Office within two months from the date hereof.

Registrar of Patents

Applicant: NEW GROWING SYSTEMS, S.L. Paraje de Canadillar, 10 04640 Pulpi, Almeria. Request permission to amend the specification of letters patent no: **2020/02718** of **13/05/2020** for **INSTALLATION FOR A HANGING CULTIVATION SYSTEM.**

A copy of the original specification on which the proposed amendment is indicated in red, is now available for public inspection at the Patent Office.

Any notice of opposition (on Patent Form 19) must be lodged at the Patent Office within two months from the date hereof.
Registrar of Patents

INSPECTION OF SPECIFICATIONS

A complete specification may, after acceptance is advertised, be inspected during office hours at the Patent Office, Pretoria, at a charge of **R4, 00.** Please note, that in terms of section 43 (3) if the acceptance of an application which claims priority in terms of section 31 (1) (c) is not published in terms of section 42 within 18 months from the earliest priority claimed from the relevant application in a convention country, it shall be opened to public inspection after the expiration of 18 months from the earliest priority so claimed.

COPIES OF DOCUMENTS

The Patent Office, Private Bag X400, Pretoria, supplies copies of all patent and trade mark documents at the following rate:

Photocopies: **R1, 00 per page**

(Payment to be affected by means of revenue stamps only.)

COMPLETE SPECIFICATIONS ACCEPTED AND ABRIDGEMENTS OR ABSTRACTS THEREOF

Complete specifications in respect of the under mentioned applications for letters Patent have been accepted by the Registrar of Patents.

THE PATENTS ACT, 1978 (ACT NO. 57 OF 1978)

In terms of section 42 (b) of the Patents Act, 1978, a patent shall be deemed to have been sealed and granted as from the date of publication of the acceptance.

The numerical references denote the following: **(21)** Number of application. **(22)** Date of application. **(DA)** Date of acceptance. **(51)** Class. **(71)** Name of applicant(s). **(72)** Name of all inventors. **(33)** Country. **(31)** Number and **(32)** Date of convention application. **(54)** Title of invention. **(00)** Number of sheets.

Registrar of Patents

21: 2012/06063. 22: 2012/08/13. 43: 2023/03/08
51: A61K; A61P; C07C; C07D
71: Acetylon Pharmaceuticals Inc.
72: VAN DUZER, John, MAZITSCHEK, Ralph, OGIER, Walter, BRADNER, James Elliott, HUANG, Guoxiang, XIE, Dejian, YU, Nan
33: US 31: 61/336,460 32: 2010-01-22
54: REVERSE AMIDE COMPOUNDS AS PROTEIN DEACETYLASE INHIBITORS AND METHODS OF USE THEREOF
00: -
The present invention relates to novel "reverse amide" compounds comprising a zinc chelator group, and the use of such compounds in the inhibition of HDAC6 and in the treatment of various diseases, disorders or conditions related to HDAC6.

21: 2014/05875. 22: 2014/08/11. 43: 2023/03/22
51: B02C
71: TAYLOR, Fredrick
72: TAYLOR, Fredrick
33: US 31: 13/348,128 32: 2012-01-11
54: SYSTEM AND PROCESS FOR CONVERTING WHOLE TIRES AND OTHER SOLID CARBON MATERIALS INTO RECLAIMABLE AND REUSABLE COMPONENTS
00: -
A method of converting solid carbon based material comprising the steps of: providing a rotatable chamber in which the material can be heated, introducing the material into the chamber, indirectly heating the chamber, rotating the heated chamber with the material in the heated chamber to reduce the material collecting low temperature gases or oil or both from the reduced material from the chamber, an collecting residual solids from the reduced material from the chamber, wherein the chamber is heated to a temperature between about 350°F andabout 1100°F.

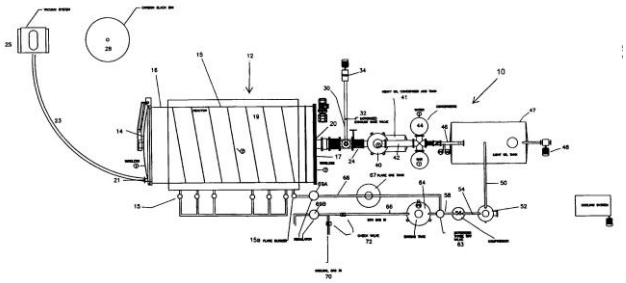

21: 2015/03824. 22: 2015/05/28. 43: 2023/04/11
51: B31D; B41M
71: DOCUMOTION RESEARCH, INC.
72: VAN BOOM, Joel, KRAHL, William, R., EHRMANN, Jeff
33: US 31: 61/614,771 32: 2012-03-23
54: PAPER, LABELS MADE THEREFROM AND METHODS OF MAKING PAPER AND LABELS
00: -
Paper is disclosed for use in making repositionable or removable adhesive labels. Figure 2 illustrates a preferred construction of the paper according to the disclosure. Paper (20) is coated with top coat (21) which in turn is coating with a release layer (22). Top coat (21) may be a single or multiple layers, such as two layers. The top coat is useful on thermal paper to avoid activation of the thermal layer by handling of

the paper or by the release layer. On the opposite side of the paper, a primer and/or cleaning layer (or layers) (23) is provided and on that an adhesive layer (24), preferably applied in two or more layers. Adhesive (24) is arranged in a series of discrete areas, particles or spots. These are preferably individually isolated and spaced apart. They are preferably symmetrically arranged on either side of the center line (C). Paper (20) is a light weight paper, preferably having a weight of 40 to 65 gsm. For POS printers the paper is a thermal paper having a thermally responsive treatment on the surface facing the top coat layer (21). Paper can be utilized that has a suitable top coating from the paper mill, or a suitable top coat can be applied in line.

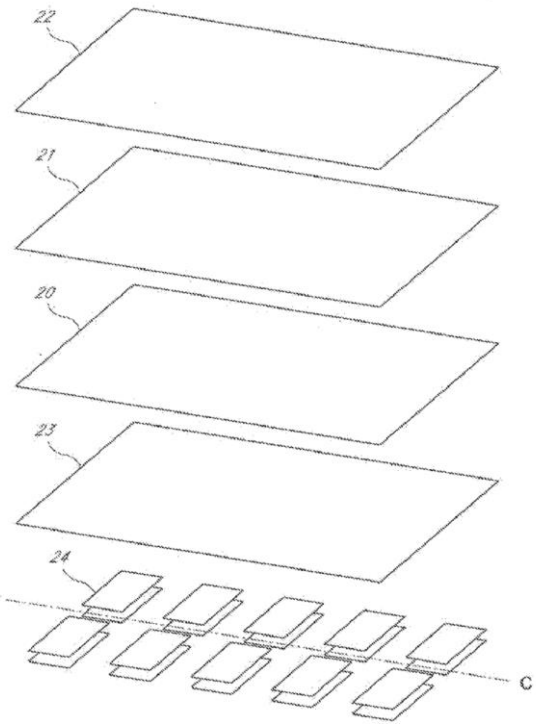

21: 2015/04579. 22: 2015/06/24. 43: 2023/04/11
51: A61K; A61P
71: VANDA PHARMACEUTICALS INC.
72: DRESSMAN, Marlene, Michelle, FEENEY, John, Joseph, LICAMELE, Louis, William, POLYMEROPOULOS, Mihael, H.
33: US 31: 61/738,985 32: 2012-12-18
33: US 31: 61/738,987 32: 2012-12-18
33: US 31: 61/755,896 32: 2013-01-23
33: US 31: 13/751,011 32: 2013-01-25
33: US 31: PCT/US2013/023315 32: 2013-01-25
33: US 31: 61/903,354 32: 2013-11-12

54: TREATMENT OF CIRCADIAN RHYTHM DISORDERS

00: -

Embodiments of the invention relate to the use of a melatonin agonist in the treatment of free running circadian rhythms in patients, including light perception impaired patients, e.g., blind patients, and to methods of measuring circadian rhythm.

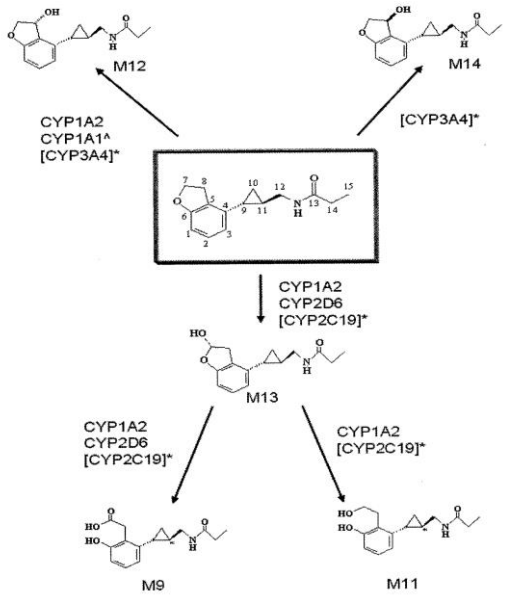

21: 2015/05081. 22: 2015/07/15. 43: 2023/04/11
51: E02F
71: CQMS PTY LTD
72: HASLETT, David, WALLIS, Douglas, PLANT, Benjamin, Charles, WILKIE, Luke
33: AU 31: 2013900276 32: 2013-01-25

54: AN EXCAVATOR WEAR ASSEMBLY

00: -

An excavator wear assembly comprising a mounting nose having a rear bearing face, a forward bearing face, an upper bearing face disposed at an angle between the rear bearing face and the forward bearing face, a front face substantially perpendicular to the forward bearing face and a rib extending over at least part of the upper bearing face, forward bearing face and front face; and a wear member having a rearwardly opening socket adapted to receive the mounting nose, the socket being at least partially defined by a top wall and a front wall, the wear member having a recess formed in the top wall

and front wall adapted to receive at least part of the rib.

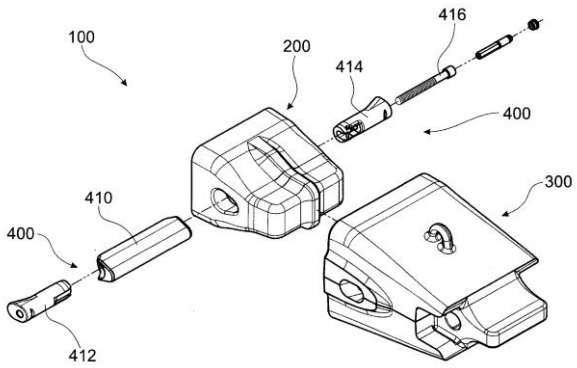

21: 2015/05638. 22: 2015/08/05. 43: 2023/04/11
51: A61K; C12N
71: THE BOARD OF TRUSTEES OF THE UNIVERSITY OF ARKANSAS, THE TEXAS A&M UNIVERSITY SYSTEM
72: BARTA, John R., BERGHMAN, Luc, BIELKE, Lisa, HARGIS, Billy, SHIVARAMAIAH, Srichaitanya, FAULKNER, Olivia, B
33: US 31: 61/764,681 32: 2013-02-14
54: COMPOSITIONS AND METHODS OF ENHANCING IMMUNE RESPONSES TO EIMERIA OR LIMITING EIMERIA INFECTION
00: -
Vaccine vectors and methods of using the vaccine vectors to enhance the immune response to an Apicomplexan parasite and reduce the morbidity or mortality associated with subsequent infection are provided herein. The vaccine vectors include a polynucleotide encoding a Rhomboid polypeptide and optionally include an immune-stimulatory polypeptide suitably expressed on the surface of the vaccine vector.

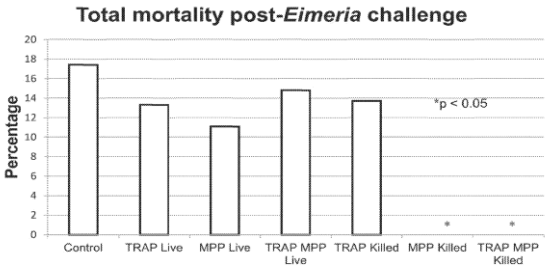

21: 2015/06466. 22: 2015/09/03. 43: 2023/04/11
51: A61K
71: THE BOARD OF TRUSTEES OF THE UNIVERSITY OF ARKANSAS, THE TEXAS A&M UNIVERSITY SYSTEM
72: BIELKE, Lisa, LAYTON, Sherryll, HARGIS, Billy, PUMFORD, Neil, R., FAULKNER, Olivia, B, BERGHMAN, Luc, ABI-GHANEM, Daad
33: US 31: 61/790,301 32: 2013-03-15
54: COMPOSITIONS AND METHODS OF ENHANCING IMMUNE RESPONSES TO ENTERIC PATHOGENS
00: -
Vaccine vectors capable of eliciting an immune response to enteric bacteria and methods of using the same are provided. The vaccine vectors include a polynucleotide encoding a PAL polypeptide. The PAL polypeptide may be expressed on the surface of the vaccine vector. The vaccine vector may also include a second polypeptide encoding an immunostimulatory polypeptide such as a CD154 polypeptide or an HMGB1 polypeptide.

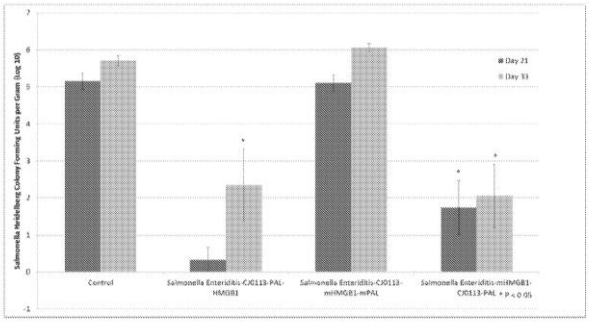

21: 2015/07723. 22: 2015/10/15. 43: 2023/03/08
51: A61K; A61P
71: Murray and Poole Enterprises Limited
72: RIEL, Susanne
33: US 31: 61/812,514 32: 2013-04-16
54: SUSTAINED-RELEASE FORMULATIONS OF COLCHICINE AND METHODS OF USING SAME
00: -
Pharmaceutical compositions of colchicine for once-a-day oral administration are provided. The formulations comprise a sustained-release component and an optional immediate- release component, the compositions of which can be selectively adjusted, respectively, to release the active ingredient along a pre-determined or desired release profile. Method of treating or preventing cardiovascular disease and/or inflammatory disease in mammalian subjects comprising the administration of the novel formulations disclosed herein is also provided.

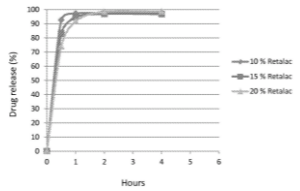

21: 2016/00410. 22: 2016/01/19. 43: 2023/04/05
51: F01K; F17C
71: ITM POWER (RESEARCH) LIMITED
72: WARDLE, David, HYDE, Kristian
33: GB 31: 1312964.8 32: 2013-07-19
33: GB 31: 1320067.0 32: 2013-11-13
54: PRESSURE REDUCTION SYSTEM
00: -
A system for reducing pressure and extracting energy from natural gas pipelines or the cryogenics industry comprises an electrolyser that produces hydrogen, a heating device adapted to heat the natural gas in the pipeline and a device adapted to extract energy from expansion of the natural gas, wherein the extracted energy is used to power the electrolyser and/or heat the natural gas. The system can be used to extract energy from gas expansion.

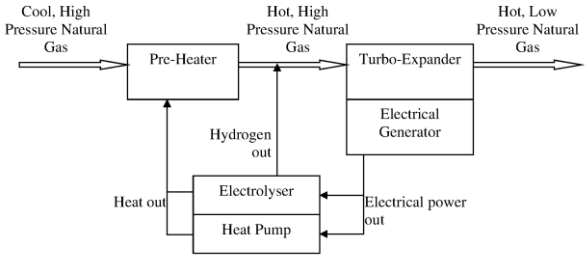

Figure 2. Modular representation of the proposed system

21: 2016/01550. 22: 2016/03/04. 43: 2023/04/18
51: C12N
71: REGENERON PHARMACEUTICALS, INC.
72: LAWRENCE, Shawn, KIM, Ann, JOHNSON, Amy
33: US 31: 61/889,815 32: 2013-10-11
54: METABOLICALLY OPTIMIZED CELL CULTURE
00: -
An improved method for large scale production of proteins and/or polypeptides in cell culture is provided. In accordance with the present invention, the method provides for culturing cells that have metabolically shifted. The use of such a method or system allows high levels of protein or polypeptide production and reduces accumulation of unwanted metabolic waste such as lactate. Proteins and polypeptides expressed in accordance with the present invention may be advantageously used in the preparation of pharmaceutical, immunogenic, or other commercial biologic compositions, such as antibodies.

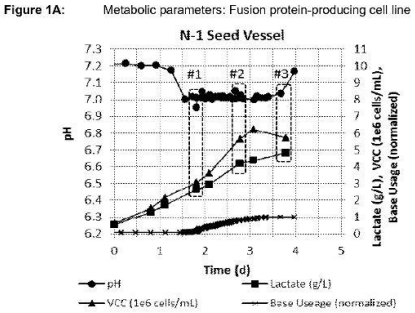

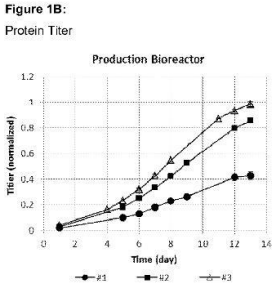

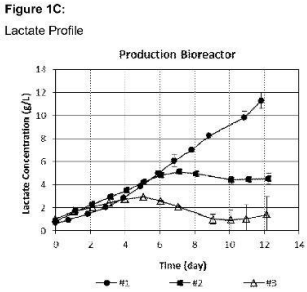

21: 2016/03425. 22: 2016/05/19. 43: 2023/04/05
51: G01R; H02J
71: REACTIVE TECHNOLOGIES LIMITED
72: HUOMO, Heikki, ALAKONTIOLA, Jukka
33: GB 31: 1319624.1 32: 2013-11-06
54: GRID FREQUENCY RESPONSE
00: -
Method and apparatus for determining inertia within a synchronous area of an electric power grid are described. Power flow to and/or from a group of one or more power units is modulated on the basis of a sequence of control signals (figure 4a) and a frequency characteristic relating to a frequency of electricity flowing in the electric power grid measured (solid lines of figures 4b-4d). A frequency response characteristic associated with at least one area of the electric power grid is determined on the basis of the measured frequency characteristic and the determined magnitude characteristic. From this it is determined whether the inertia in the area of the grid in which the power unit is located is low (figure 4b), medium (figure 4c) or high (figure 4d), and it enables

frequency response characteristics within a synchronous area of the electric power grid to be easily determined.

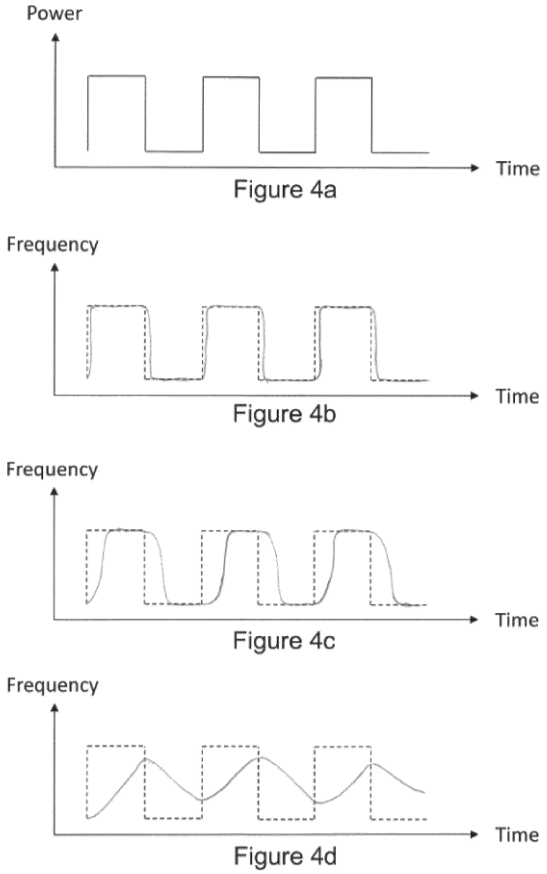

21: 2016/03831. 22: 2016/06/06. 43: 2023/04/05
51: A61K; A61P
71: NALPROPION PHARMACEUTICALS, LLC
72: KLASSEN, Preston, TAYLOR, Kristin
33: US 31: 61/913,216 32: 2013-12-06
33: US 31: 61/914,938 32: 2013-12-11
33: US 31: 61/984,580 32: 2014-04-25
33: US 31: 14/322,810 32: 2014-07-02

54: COMPOSITIONS AND METHODS FOR REDUCING MAJOR ADVERSE CARDIOVASCULAR EVENTS

00: -

The present application relates to compositions, kits, uses, systems and methods of using naltrexone and bupropion, or pharmaceutically acceptable salts thereof, for reducing the risk of adverse cardiovascular outcomes or events, including Major Adverse Cardiovascular Events (MACE) in subjects, preferably those at increased risk of adverse cardiovascular outcomes or MACE, that may be overweight or obese. The present application also relates to compositions, kits, uses, systems and methods of using naltrexone and bupropion or pharmaceutically acceptable salts thereof for treatment of overweight or obesity in subjects, preferably at increased risk of adverse cardiovascular outcomes or MACE, wherein the treatment reduces the risk of MACE.

Figure 1. Study Design

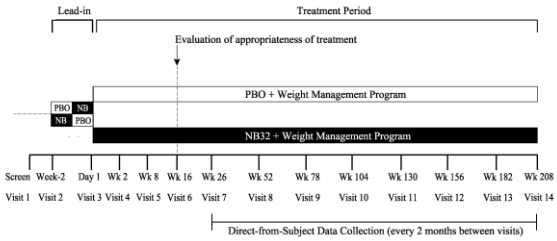

21: 2016/06650. 22: 2016/09/26. 43: 2023/03/08
51: F42B; F42C; F42D
71: Orica International Pte Ltd
72: APPLEBY, Rodney, JOHNSON, David, GOODRIDGE, Richard, WICKS, Byron
33: US 31: 61/971,205 32: 2014-03-27

54: APPARATUS, SYSTEM AND METHOD FOR BLASTING

00: -

An initiator apparatus (IA) for blasting, the apparatus including: a magnetic receiver for receiving a magnetic communication signal through the ground by detection of a magnetic field; a controller, in electrical communication with the magnetic receiver, for processing the magnetic communication signal to determine a command for blasting; and a light source in electrical communication with the controller for generating a light beam to initiate a light-sensitive explosive (LSE) in accordance with the command.

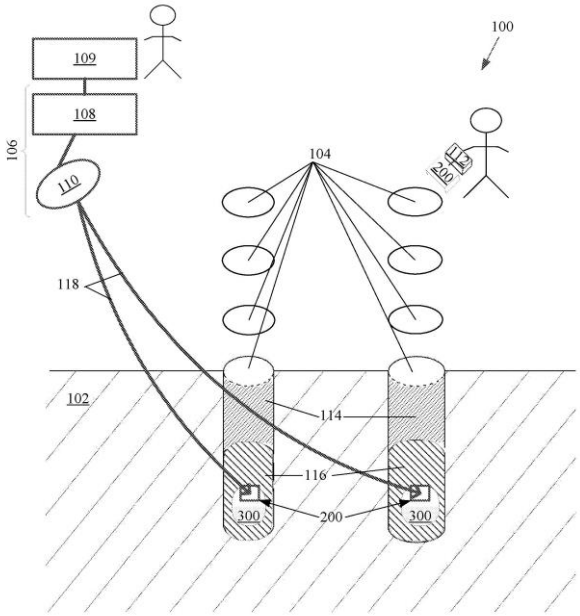

21: 2016/06666. 22: 2016/09/27. 43: 2023/04/05
51: G01B
71: VICTAULIC COMPANY
72: PUZIO, Matthew, J., DOLE, Douglas, R., PRICE, Anthony, VICARIO, Daniel, B.
33: US 31: 13/964,671 32: 2013-08-12
54: METHOD AND DEVICE FOR FORMING GROOVES IN PIPE ELEMENTS
00: -
A method of forming circumferential grooves in pipe elements using opposed rollers to cold work the pipe elements determines the diameter of the groove while the pipe element is rotated between the rollers. A device for executing the method uses the instantaneous determinations of the groove depth in a feed-back loop to control the operation of the device and halt groove formation when the groove depth is within a specified tolerance.

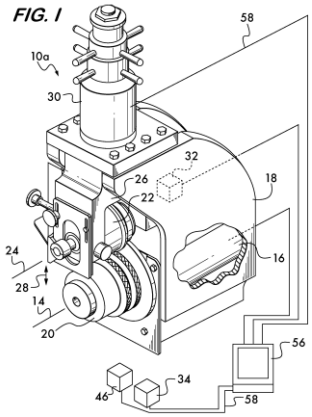

21: 2016/06763. 22: 2016/09/30. 43: 2023/03/24
51: A61K; C07K; C12N
71: GENZYME CORPORATION
72: SCARIA, Abraham, SULLIVAN, Jennifer, STANEK, Lisa, M., SHIHABUDDIN, Lamya
33: US 31: 61/988,131 32: 2014-05-02
33: US 31: 62/114,575 32: 2015-02-10
54: AAV VECTORS FOR RETINAL AND CNS GENE THERAPY
00: -
Provided herein are improved rAAV (e.g., rAAV2, rAAVrh8R, etc.) for enhanced gene therapy of ocular disorders or CNS disorders wherein the rAAV comprise one or more substitutions of amino acids that interact with heparan sulfate proteoglycan. The invention provides methods for improved transduction of retinal cells and methods for treating ocular diseases with improved compositions of rAAV particles. Further provided herein are improved recombinant adeno-associated virus (rAAV) (e.g., rAAV2, rAAVrh8R, etc.) for enhanced gene therapy of disorders of the CNS. The invention provides methods for delivering the rAAV to the CNS, methods for treating disorders of the CNS with improved compositions of rAAV particles, and kits for delivering the rAAV to the CNS and/or treating a CNS disorder.

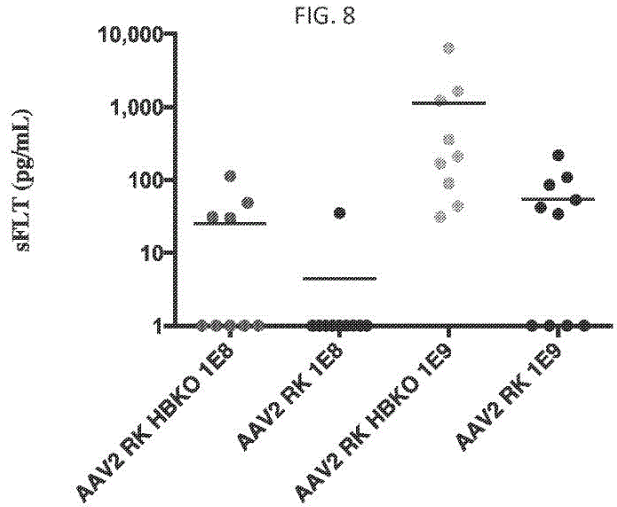

21: 2016/07062. 22: 2016/10/13. 43: 2023/04/05
51: B07B
71: SCHENCK PROCESS AUSTRALIA PTY LIMITED
72: ASHLEY, Gordon, MANN, Simon Gerard, SHALEM, Rotem, BURGESS, James, Matthew, MORRIS, Philip, THOMAIER, Martin
33: AU 31: 2014901891 32: 2014-05-21
54: MODULAR EXCITER BEAM
00: -
The present invention relates broadly to a modular exciter beam (10) fitted to a vibratory screen assembly (12). The exciter beam (10) spans between opposing side walls (14A) and (14B) of the screen assembly (12). The modular exciter beam (10) provides mounting for a pair of exciter mechanisms (16A) and (16B) which are located substantially inside the side walls (14A) and (14B) of the screen assembly (12).

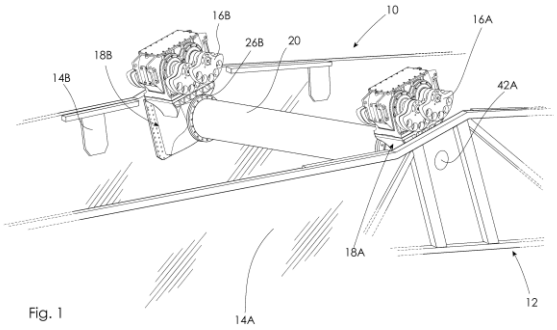

21: 2016/08194. 22: 2016/11/28. 43: 2023/04/05
51: A61K; A61P
71: BOARD OF REGENTS, THE UNIVERSITY OF TEXAS SYSTEM
72: SESSLER, Jonathan L., ARAMBULA, Jonathan, SIDDIK, Zahid H., THIABAUD, Gregory
33: US 31: 62/010,841 32: 2014-06-11
33: US 31: 62/135,502 32: 2015-03-19
54: TEXAPHYRIN-PT(IV) CONJUGATES AND COMPOSITIONS FOR USE IN OVERCOMING PLATINUM RESISTANCE
00: -
The present disclosure relates platinum(IV) and texaphyrin linked conjugates and compositions comprising a texaphyrin and a platinum(IV) agent. The present disclosure also provides pharmaceutical compositions of the conjugates and compositions. Also, provided herein are methods of using the instant compounds in the treatment of cancer such as a platinum resistant cancer.

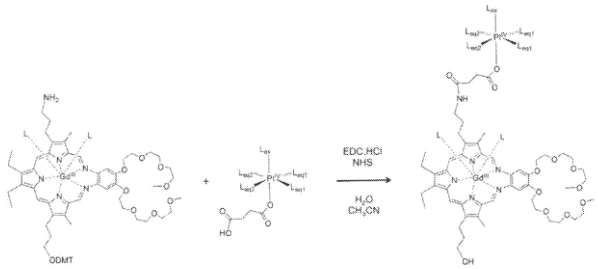

21: 2016/08433. 22: 2016/12/07. 43: 2023/04/05
51: A61K
71: PROBI USA, INC.
72: GAMBLE, Timothy, BLANCH, Anthony
33: US 31: 62/019,717 32: 2014-07-01
54: BI-LAYER DUAL RELEASE PROBIOTIC TABLETS
00: -
The present invention generally relates to dietary supplement and pharmaceutical formulations comprising layered acid protective oral dosage formulations comprising probiotics and provided as single unified or cohesive dosage form units. Each individual acid protective layer of the cohesive dosage form provides one of a different probiotic payload, a different release profile to target delivery of probiotic to a particular region in the gastrointestinal tract, or both different probiotic payloads and release profiles to target delivery of different probiotics to particular regions in the gastrointestinal tract.

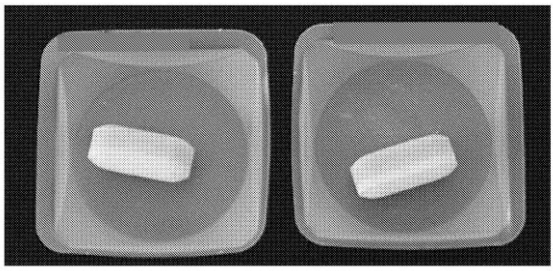

21: 2017/01332. 22: 2017/02/22. 43: 2023/04/05
51: A47J
71: TRAEGER PELLET GRILLS, LLC
72: COLSTON, Michael
33: US 31: 62/216,142 32: 2015-09-09
54: SMOKE TRAP APPARATUS AND SYSTEM
00: -
A smoke trap includes a receptacle with a floor opening, a tubular riser surrounding the opening and extending from the floor into a receptacle cavity, and a capping element disposed over an aperture in a riser. The capping element has an upper wall and a side wall partially bounding a body cavity and extending from the upper wall toward the floor. The capping element covers the aperture from above and from the side without fluidly sealing the aperture such that the aperture is in fluid communication with the body cavity and the body cavity is in fluid communication with the receptacle cavity. A portion of the side wall extends past the aperture such that the aperture is disposed within the body cavity. Grease management systems that include the smoke trap have means for transferring grease into the receptacle cavity to inhibit smoke from escaping the receptacle cavity through the opening.

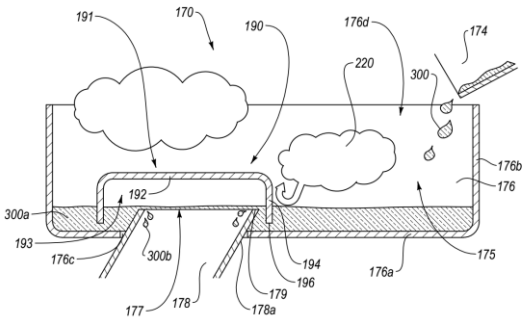

21: 2017/02088. 22: 2017/03/24. 43: 2023/04/05
51: G05B
71: AVIS BUDGET CAR RENTAL, LLC
72: LEE, Sang, J., GHALIB, Syed, Naveed
33: US 31: 14/500,750 32: 2014-09-29
54: TELEMATICS SYSTEM, METHODS AND APPARATUS FOR TWO-WAY DATA COMMUNICATION BETWEEN VEHICLES IN A FLEET AND A FLEET MANAGEMENT SYSTEM
00: -
Programmable telematics systems, methods and apparatus for two-way transmission of data and information between fleet vehicles and a fleet management system. The systems and methods employ a programmable telematics communications unit (TCU) configured to connect to the OBD II port of a vehicle, enabling two-way transmission of data and information between a fleet management system and vehicles in the fleet. The TCU device includes cellular data connectivity enabling communication with the management system through existing cellular telephone networks. The programmable TCU may be toggled between multiple operating modes, wherein the TCU provides different functionality, such that a single vehicle may participate in multiple vehicle programs at different points in time, including separate vehicle rental and vehicle sharing programs.

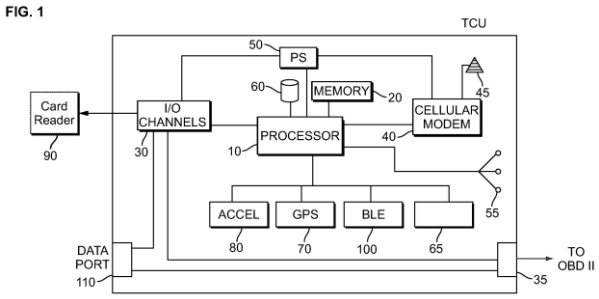

21: 2017/02089. 22: 2017/03/24. 43: 2023/04/05
51: A47J
71: TRAEGER PELLET GRILLS, LLC
72: COLSTON, Michael
33: US 31: 62/216,132 32: 2015-09-09
33: US 31: 15/070,225 32: 2016-03-15
54: OVAL-SHAPED GRILL WITH HINGED LID
00: -
A grilling device includes an oven section having an outer wall with opposing side portions and an encircling body portion extending therebetween. The body portion has an access opening and the grilling device includes a lid that selectively covers the access opening by means of a handle attached thereto. The grilling device also includes opposing

hinge elements connected to opposite sides of the lid and to the side portions of the outer wall, as opposed to the encircling body portion. In particular, the hinge elements are connected to respective rear areas of the side portions. Accordingly, the path of opening the lid has a different shape or curvature and thereby positions the handle substantially lower than if the hinge elements were connected to the body portion adjacent to the access opening. The opposing side portions have a substantially oval shape and the hinge elements have an elongated configuration.

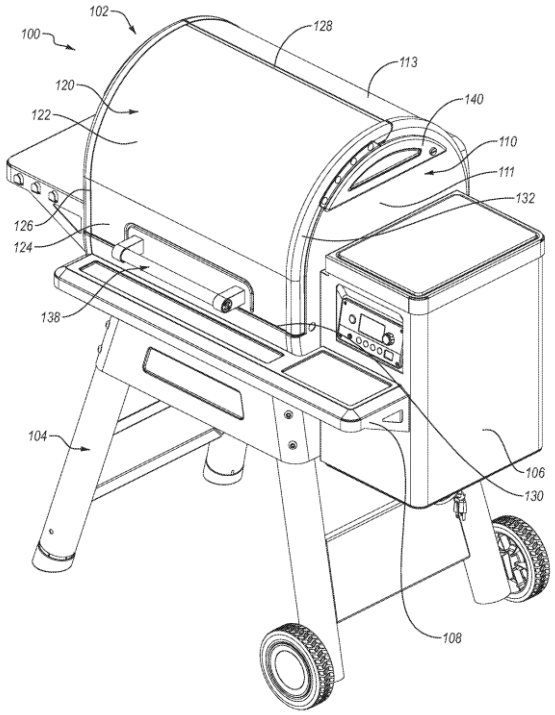

21: 2017/02090. 22: 2017/03/24. 43: 2023/04/05
51: A47J
71: TRAEGER PELLET GRILLS, LLC
72: COLSTON, Michael
33: US 31: 62/216,136 32: 2015-09-09
33: US 31: 15/070,220 32: 2016-03-15
54: MULTI-TIERED GRILL RACK SYSTEM AND GRILL MOUNTS
00: -
Grill rack systems include at least three grill racks and a mounting assembly for supporting the grill racks. The mounting assembly includes a plurality of grill rack mounting elements that are connectable to an inner surface of a grilling device. A grilling device with a grill rack system includes an oven section having an outer wall that partially bounds an internal grilling compartment with an access opening and a lid that selectively covers the access opening. The grilling device also includes a grill rack system having at least three grill racks supported by a mounting assembly inside the internal grilling compartment. Oval-shaped grilling devices have the grill racks mounted therein in a vertically spaced configuration, with the front edge of each grill rack progressively recessed relative to an adjacent lower grill rack. At least one grill rack can have a removable grill rack insert and/or be slidable into the grill.

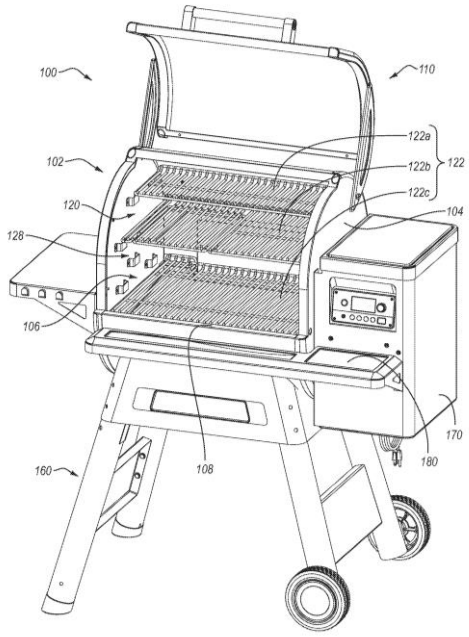

21: 2017/02316. 22: 2017/03/31. 43: 2023/04/05
51: G06F
71: FLOW LABS, INC.
72: VAN DER WESTHUIZEN, Willem Morkel
33: ZA 31: 2014/07753 32: 2014-10-24
54: TARGET-DIRECTED MOVEMENT IN A USER INTERFACE
00: -
The invention provides a method of interacting with interactive items in a user interface. A user interface is provided which includes a control region and a display region. A plurality of interactive items are displayed in the display region. The user interface

tracks the position and movement of a pointer in the control region, and interprets the movement and/or position of the pointer. Movement along a first predefined axis is interpreted as focus pointing only, movement along a second predefined axis is interpreted as view pointing only. Movement having components along both axes is interpreted as both view pointing and focus pointing, enabling both view pointing and focus pointing to be substantially simultaneously performed.

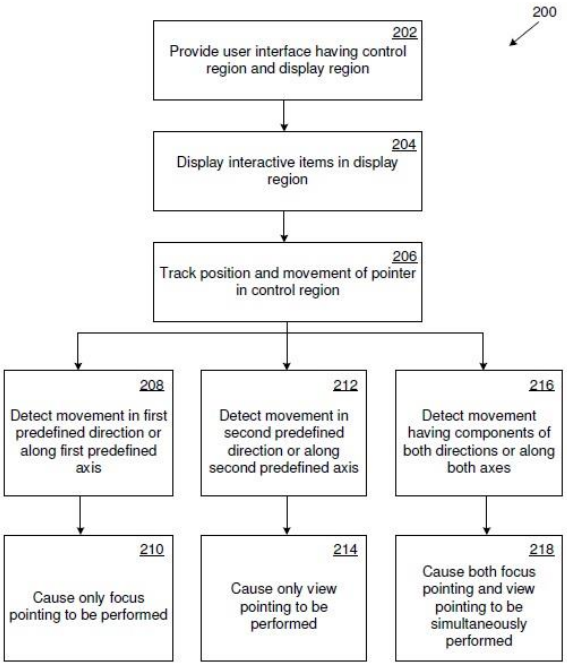

21: 2017/04563. 22: 2017/07/05. 43: 2023/04/05
51: G01N; H04N
71: AREVA NP
72: TAGLIONE, Matthieu
33: FR 31: 15 50371 32: 2015-01-16
54: SCENE RECONSTRUCTION BY ASSEMBLING IMAGES
00: -
A method for inspecting a surface (12) of a piece of nuclear power plant equipment, the method comprising the following steps: - scanning the surface (12) with an acquisition field (20) of a matrix array camera (14), the acquisition field (20) moving relative to the surface (12) at a speed of movement; - acquiring, by means of a matrix array camera (14), an image (22) of the acquisition field (20), with a certain frequency of acquisition, each image (22) comprising a first number of lines of pixels; - extracting, from each image (22), a first set of lines, the first set comprising a second number of continuous lines of pixels, the second number being between 2 and the first number; - constituting a final image (32) of the surface (12) by juxtaposing the lines extracted from each image (22), the speed of movement, the frequency of acquisition, the first number of lines and the second number of lines being chosen such that the final image (32) covers the entire surface (12) without interruption.

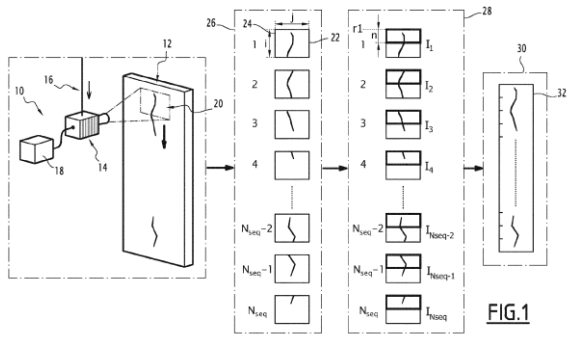

21: 2017/04806. 22: 2017/07/14. 43: 2023/04/05
51: F04B
71: WATSON-MARLOW BREDEL B.V.
72: OUDE VRIELINK, Ronald, VAN DER SPAN, Fokke Patrick, LITTOOIJ, Jonathan Adrianus
33: GB 31: 1422453.9 32: 2014-12-17
54: PERISTALTIC PUMP
00: -
A peristaltic pump 2 comprising: a housing 10 having a hub 18; a rotor 12 disposed within the housing 10 and rotatably supported by the hub 18, the rotor 12 comprising a drive shaft 16 which extends through the hub 18, the drive shaft 16 configured to engage with an output shaft 8 of a drive unit 4 to form a drive connection; wherein a first misalignment pivot 32 is formed between the rotor 12 and the hub 18 and a second misalignment pivot 34 is formed between the drive shaft 16 and the output shaft 8 of the drive unit 4.

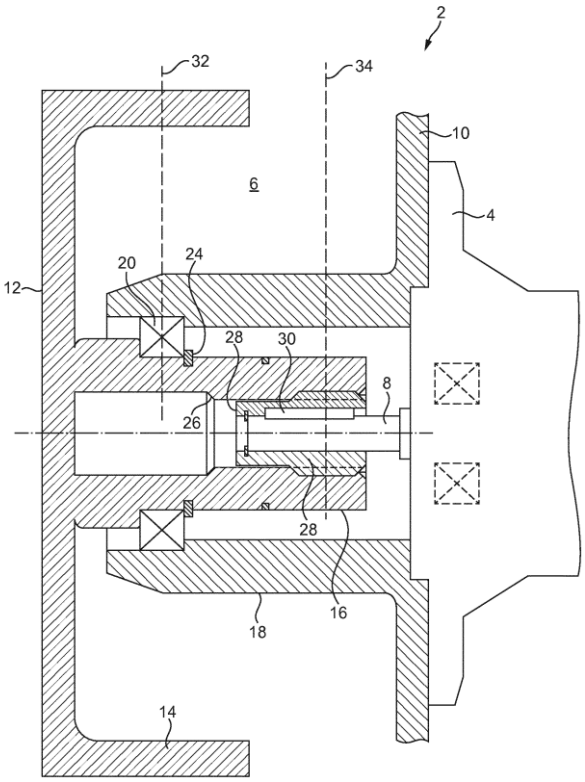

21: 2017/05526. 22: 2017/08/15. 43: 2023/04/05
51: G06F; G07B; G06Q
71: UNIVERSITY OF JOHANNESBURG
72: DUDHIA, Zulfaqar Ebrahim Mahomed
33: ZA 31: 2016/05778 32: 2016-08-19
54: METHOD AND SYSTEM FOR MANAGING AN ELECTRONIC TOLL ACCOUNT
00: -
A method and system for managing an electronic toll account of a user is described. An indication as to a fuel purchase by a user at a point of sale for vehicle fuel is received by a remotely accessible server, the fuel purchase including a levy. The levy is added as positive credit to an electronic toll account of the user. A request is then received to process a toll payment transaction against the electronic toll account, and credits are deducted from the electronic toll account to process the toll payment transaction. Options for refunding at least part of the credit balance on the electronic toll account are provided to the user.

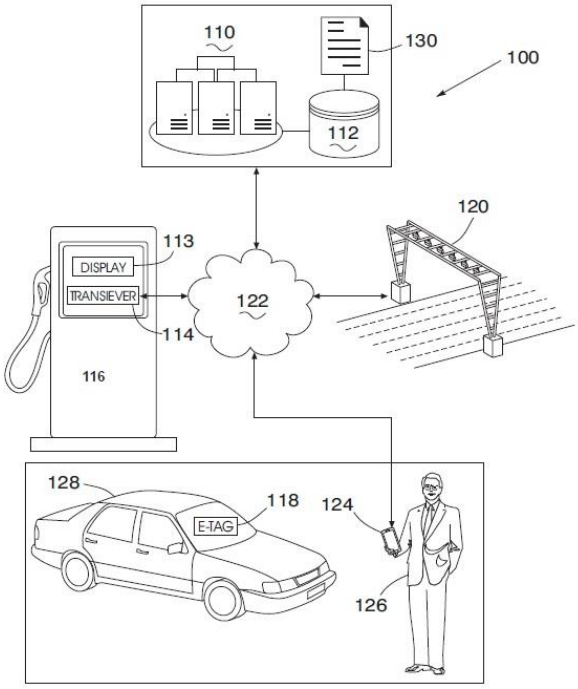

21: 2017/05708. 22: 2017/08/22. 43: 2023/04/12
51: A61K
71: CURTANA PHARMACEUTICALS, INC.
72: BEATON, Graham, TUCCI, Fabio C., RAVULA, Satheesh B., MCHARDY, Stanton F., RUIZ, Francisco Xavier, III, LOPEZ, Ambrosio, Jr., CAMPOS, Bismarck, WANG, Hua-Yu Leo
33: US 31: 62/126,382 32: 2015-02-27
54: INHIBITION OF OLIG2 ACTIVITY
00: -
Described herein are compounds and pharmaceutical compositions containing such compounds, which inhibit the activity of Olig2. Also described herein are methods of using such Olig2 inhibitors, alone and in combination with other compounds, for treating cancer and other diseases. In particular the Olig2 inhibitors may be used to treat glioblastoma.

21: 2017/06074. 22: 2017/09/06. 43: 2023/03/13
51: C07D; A61K; A61P
71: SUNOVION PHARMACEUTICALS INC., PGI DRUG DISCOVERY LLC
72: CHYTIL, MILAN, ENGEL, SHARON, HANANIA, TALEEN G, ALEXANDROV, VADIM, LEAHY, EMER
33: US 31: 62/115,043 32: 2015-02-11
54: FUSED DIHYDRO-4H-PYRAZOLO[5,1-C][1,4]OXAZINYL COMPOUNDS AND ANALOGS FOR TREATING CNS DISORDERS

00: -
Disclosed are compounds of Formula (I) and pharmaceutically acceptable salts thereof, wherein Ring B, A^1, A^2, R^6, w and n1 are defined and described herein; compositions thereof; and methods of use thereof. These compounds are useful for treating a variety of neurological and psychiatric disorders, such as those described herein.

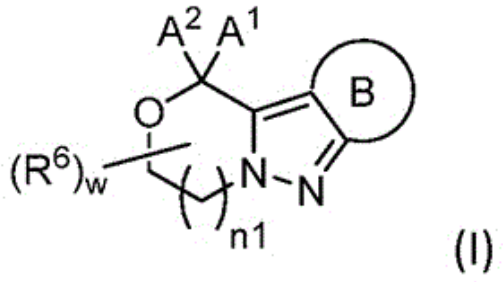

21: 2017/06277. 22: 2017/09/15. 43: 2023/04/05
51: C12Q; G01N
71: MASTAPLEX LIMITED
72: BORK, Olaf
33: AU 31: 2015900695 32: 2015-02-27

54: BACTERIA IDENTIFICATION AND ANTIMICROBIAL SUSCEPTIBILITY TEST

00: -
The present invention provides compositions, methods and kits for bacteria identification and anti-microbial susceptibility testing for the treatment of, for example, acute and chronic infections including infectious disease. The present invention is particularly useful in the identification of bacteria causing mastitis, and to antibiotic susceptibility testing to facilitate in the identification of an appropriate treatment for mastitis.

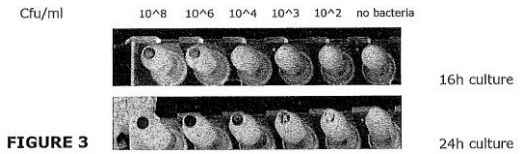

FIGURE 3

21: 2017/06307. 22: 2017/09/18. 43: 2023/04/05
51: G06F
71: GENETIC ANALYSIS AS
72: LINDAHL, Torbjørn, KARLSSON, Magdalena, SEKELJA, Monika, HEGGE, Finn
33: GB 31: 1505364.8 32: 2015-03-27

54: METHOD FOR DETERMINING GASTROINTESTINAL TRACT DYSBIOSIS

00: -
The invention provides a method for determining the likelihood of GI tract dysbiosis in a subject, said method comprising providing a test data set, wherein said test data set comprises at least one microbiota profile, said microbiota profile being a profile of the relative levels of a plurality of microorganisms or groups of microorganisms in a sample from the GI tract of the subject and wherein each level of each microorganism or group of microorganisms is a profile element of said test data set, applying to said test data set at least one loading vector determined from latent variables within the profiles of the levels of said plurality of microorganisms or groups of microorganisms in corresponding GI tract samples from a plurality of normal subjects, thereby producing a first projected data set, applying to said first projected data set a transposed version of said at least one loading vector, thereby producing a second projected data set, comparing said test data set with said second projected data set and combining the differences between the corresponding profile elements of the second projected data set and the test data set and comparing the combined differences with a normobiotic to dysbiotic threshold value determined from the corresponding analysis of said plurality of microorganisms or groups of microorganisms in corresponding GI tract samples from a plurality of normal subjects and/or subjects with dysbiosis, applying at least one eigenvalue to said first projected data set, said eigenvalue determined from said at least one loading vector, and combining the resulting values for each profile element and comparing the combined values with a normobiotic to dysbiotic threshold value determined from the corresponding analysis of said plurality of microorganisms or groups of microorganisms in corresponding GI tract samples from a plurality of normal subjects and/or subjects with dysbiosis, wherein a microbiota profile with said combined differences or said combined resulting values in excess of said respective normobiotic to dysbiotic thresholds is indicative of a likelihood of dysbiosis.

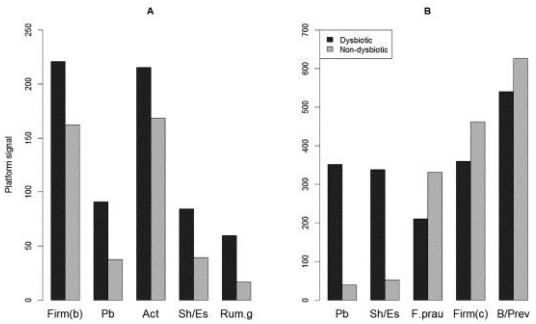

21: 2017/07915. 22: 2017/11/21. 43: 2023/04/05
51: A01K
71: UNIVERSIDAD DE ANTOFAGASTA
72: ARAYA VALENCIA, Rubén, SAUCEDO LASTRA, Pedro, ROJAS FIGUEROA, Alejandro, MATURANA ZUÑIGA, Jaime
33: CL 31: 1349-2015 32: 2015-05-19

54: METHOD FOR PRODUCING FREE PEARLS IN ABALONE

00: -

A new method is disclosed for producing free pearls unattached to the shell of abalone, preferably red abalone, Haliotis rufescens, by using nuclei grafted into grafting channels of the abalone viscera, in at least six steps: (a) relaxing abalone in a tank containing water and CO2; (b) implanting a nucleus in a grafting channel of the abalone; (c) inserting a piece of mantle tissue in the grafting channel; (d) closing the grafting channel; (e) recovering the abalone; and (f) obtaining the pearl.

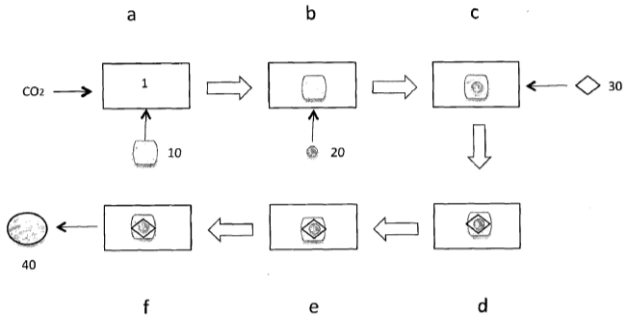

21: 2018/00611. 22: 2018/01/29. 43: 2023/03/29
51: A61K; A61P; C07K; C12N
71: THE TRUSTEES OF THE UNIVERSITY OF PENNSYLVANIA
72: GILL, SAAR, KLICHINSKY, MICHAEL, JUNE, CARL H
33: US 31: 62/197,675 32: 2015-07-28

54: MODIFIED MONOCYTES/MACROPHAGE EXPRESSING CHIMERIC ANTIGEN RECEPTORS AND USES THEREOF

00: -

The present invention includes methods and compositions for treating cancer, whether a solid tumor or a hematologic malignancy. By expressing a chimeric antigen receptor in a monocyte, macrophage or dendritic cell, the modified cell is recruited to the tumor microenvironment where it acts as a potent immune effector by infiltrating the tumor and killing the target cells. One aspect includes a modified cell and pharmaceutical compositions comprising the modified cell for adoptive cell therapy and treating a disease or condition associated with immunosuppression.

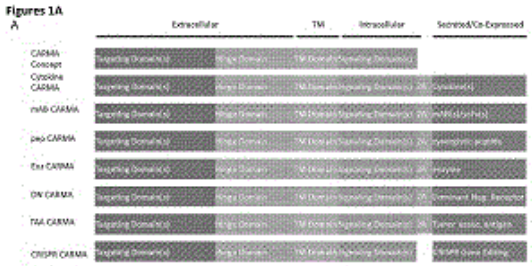

21: 2018/00672. 22: 2018/01/31. 43: 2023/04/05
51: A24F
71: RAI STRATEGIC HOLDINGS, INC.
72: BLESS, Alfred, Charles, LIBERTI, Michael, Andrew, SEARS, Stephen, Benson
33: US 31: 14/734,421 32: 2015-06-09

54: ELECTRONIC SMOKING ARTICLE

00: -

A smoking article is provided, having a component housing including a power source, and a tubular housing having a first end and a longitudinally-opposed second end, wherein the first or second end is configured to receive the component housing. The tubular housing includes an outer wall defining a cylindrical cavity. An aerosol-generating element is configured to be received within the cylindrical cavity, wherein the aerosol-generating element is configured to produce an aerosol in response to heat. An associated aerosol-generating element and related production methods are also provided.

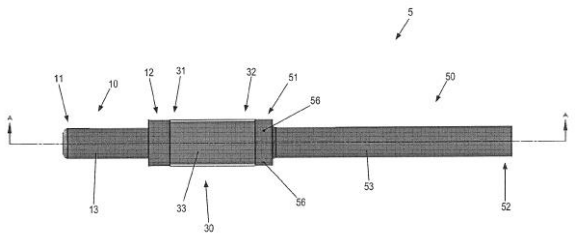

21: 2018/01192. 22: 2018/02/21. 43: 2023/04/05
51: A24F; A61M; H05B
71: RAI STRATEGIC HOLDINGS, INC.
72: CHANG, Yi-Ping, DAVIS, Michael F., SEARS, Stephen, Benson, TALUSKIE, Karen V., PIKE, Susan K., WATSON, Nicholas Harrison, REYNOLDS, Stephen C.
33: US 31: 14/808,450 32: 2015-07-24
33: US 31: 14/958,651 32: 2015-12-03
54: AEROSOL DELIVERY DEVICE WITH RADIANT HEATING
00: -
The present disclosure relates to aerosol delivery devices, methods of forming such devices, and elements of such devices. In some embodiments, the present disclosure provides devices configured for vaporization of an aerosol precursor composition through radiant heating. The radiant heat source may be a laser diode or further element suitable for providing electromagnetic radiation, and heating may be carried out within an optional chamber, which can be a radiation-trapping chamber. In some embodiments, an interior of such chamber may be configured as a black body or as a white body.

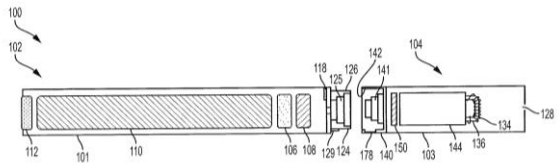

21: 2018/02260. 22: 2018/04/06. 43: 2023/03/09
51: C11D
71: Novozymes A/S
72: GORI, Klaus
33: DK 31: PA 2015 00622 32: 2015-10-09
54: LAUNDRY METHOD, USE OF POLYPEPTIDE AND DETERGENT COMPOSITION
00: -
The present invention concerns a method for laundering a textile, the use of an enzyme having DNase activity and a detergent composition comprising an enzyme having deoxyribonuclease (DNase) activity.

21: 2018/02440. 22: 2018/04/13. 43: 2023/03/22
51: A61K C07K
71: APTEVO RESEARCH AND DEVELOPMENT LLC
72: TAN, Philip, BLANKENSHIP, John, W.
33: US 31: 62/221,190 32: 2015-09-21
54: CD3 BINDING POLYPEPTIDES
00: -
The present disclosure relates to protein molecules that specifically bind to CD3, which may have at least one humanized CD3-binding domain. Such molecules are useful for the treatment of cancer. The protein molecule binding to CD3 may have a second binding domain that binds to another target. In one embodiment, multispecific polypeptide molecules bind both tumor antigen-expressing cells and the CD3 subunit of a T-cell receptor complex on T-cells to induce target-dependent T-cell cytotoxicity, activation, and proliferation. The disclosure also provides pharmaceutical compositions comprising the CD3-binding poypeptide molecules, nucleic acid molecules encoding these polypeptides and methods of making these molecules.

21: 2018/02670. 22: 2018/04/20. 43: 2023/04/05
51: G01N
71: BUCKMAN LABORATORIES INTERNATIONAL, INC., UNIVERSITE DU QUEBEC A TROIS-RIVIERES
72: BEAUREGARD, Marc, MEDDEB-MOUELHI, Fatma, HEBERT-OUELLET, Yannick, JANSE, Bernard, MACDONALD, Kevin J.
33: US 31: 62/246,231 32: 2015-10-26
54: LIGNOCELLULOSE POLYMER PROBES AND METHODS
00: -
A polymer detection probe is provided that includes a binding module that specifically binds to at least one polymer and a reporter module that is spectroscopically detectable. The binding module can be a carbohydrate-binding module (CBM). The reporter module can be a fluorescent protein. A complex is provided that includes a probe specifically bound to a pulp or paper product including at least one surface available lignocellulosic polymer. A pulp or paper product is provided that includes at least one surface available

lignocellulosic polymer and at least one probe bound thereto. Methods are provided that employ a lignocellulosic probe. A method of detecting a lignocellulosic polymer or other type of polymer is provided. A method of determining the effectiveness of an industrial treatment on pulp or a paper product is also provided. A method of deterrnining a physical property of pulp or a paper product is further provided.

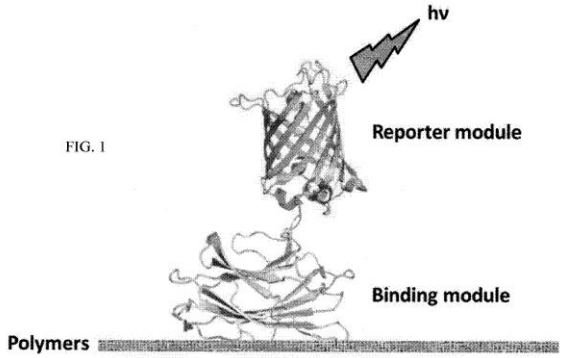

21: 2018/02717. 22: 2018/04/24. 43: 2023/05/08
51: A01K; C07K
71: REGENERON PHARMACEUTICALS, INC.
72: MUJICA, Alexander, O., BUROVA, Elena, MURPHY, Andrew, J.
33: US 31: 62/258,181 32: 2015-11-20
33: US 31: 62/370,430 32: 2016-08-03

54: NON-HUMAN ANIMALS HAVING A HUMANIZED LYMPHOCYTE-ACTIVATION GENE 3

00: -

Non-human animals, and methods and compositions for making and using the same, are provided, wherein said non-human animals comprise a humanization of a Lymphocyte activation gene 3 (Lag3). Said non-human animals may be described, in some embodiments, as having a genetic modification to an endogenous Lag3 locus so that said non-human animals express a Lag3 polypeptide that includes a human portion and an endogenous portion (e.g., a non-human portion).

21: 2018/03554. 22: 2018/05/29. 43: 2023/03/24
51: A61M
71: Johnson & Johnson Consumer Inc.
72: PAUNESCU, Alexandru, RYTEL, John, MENKE, James C.
33: US 31: 62/248,682 32: 2015-10-30

54: ASEPTIC AEROSOL MISTING DEVICE

00: -

A handheld misting device has a housing having a dispensing window is arranged and configured to contain a sonic generator, a power source coupled to the sonic generator, at least one reservoir containing a liquid, and a conduit extending from the at least one reservoir to a nozzle removably coupled to the sonic generator. The sonic generator includes a converter and an elongate horn having a proximal end coupled to the converter and a distal end, and the nozzle is removably coupled to the distal end of the horn. Thus, the device delivers the liquid through a delivery opening formed in the nozzle, and activating the sonic generator energizes the liquid in the nozzle to generate an aerosol plume that is delivered through the dispensing window.

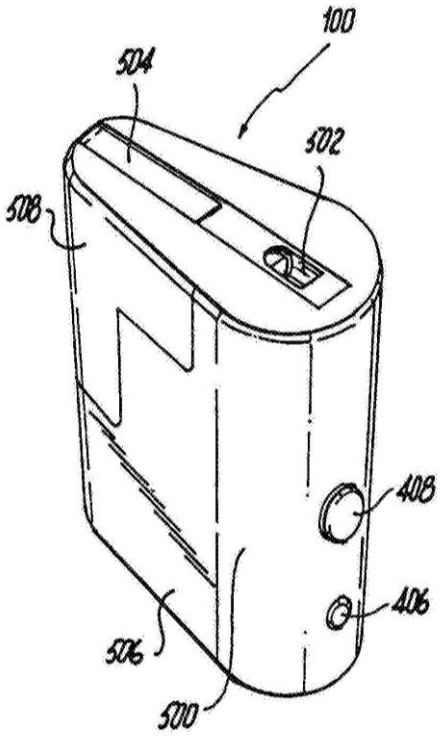

21: 2018/03950. 22: 2018/06/13. 43: 2023/04/05
51: A47J
71: TRAEGER PELLET GRILLS, LLC
72: COLSTON, Michael, ALTENRITTER, Daniel
33: US 31: 62/439,215 32: 2016-12-27

54: LEG ASSEMBLY METHODS AND SYSTEMS

00: -

The present disclosure provides systems and methods for assembling a device while maintaining

the aesthetic appearance and structural integrity of a visible surface of the device. In one or more implementations of the invention, a system includes a first assembly piece with an assembly region that comprises an opening defined by first and second connecting elements. The system further includes a second assembly piece and a fastening assembly, where a portion of the second assembly piece is shaped to fit within the assembly region opening and the fastening assembly spans the first and second connecting elements to secure the first assembly piece to the second assembly piece, and tightening of the fastening assembly causes the second connecting element to deform, pressing a surface of the second assembly piece against an adjacent surface of the first connecting element and retaining a substantially even visible surface of the device.

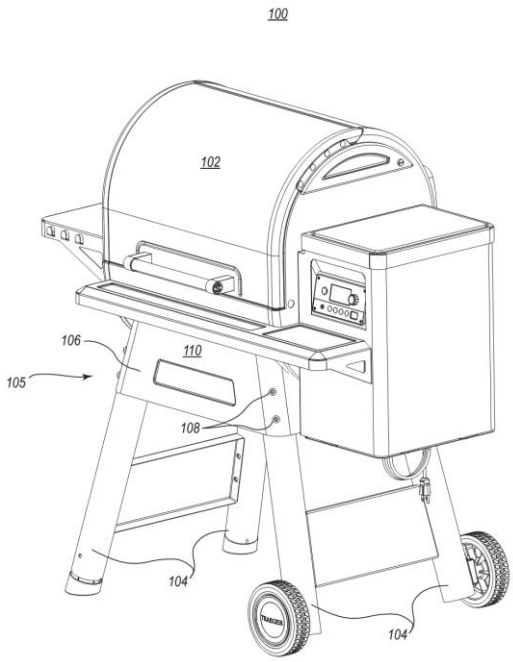

21: 2018/05051. 22: 2018/07/26. 43: 2023/04/03
51: A61K; C07K
71: THE BOARD OF REGENTS OF THE UNIVERSITY OF TEXAS SYSTEM
72: ZHANG, Ningyan, AN, Zhiqiang, SOOD, Anil, K.
33: US 31: 62/291,987 32: 2016-02-05
54: EGFL6 SPECIFIC MONOCLONAL ANTIBODIES AND METHODS OF THEIR USE
00: -
Isolated or recombinant anti-EGFL6 monoclonal antibodies are provided. In some cases, antibodies of the embodiments can be used for the detection, diagnosis and/or therapeutic treatment of human diseases, such as cancer.

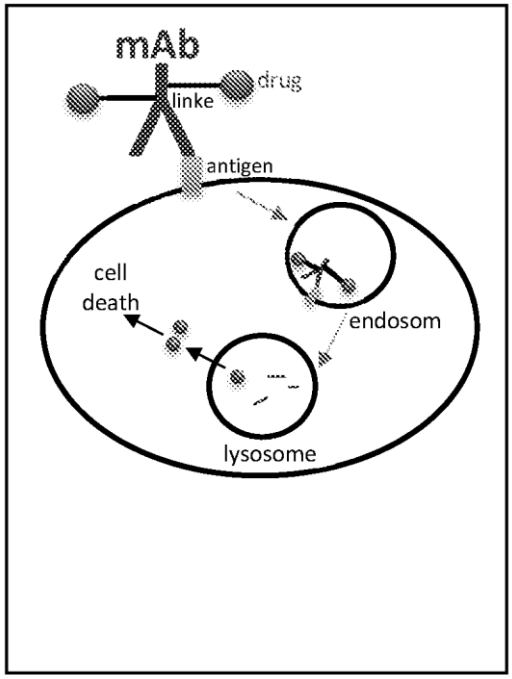

21: 2018/05238. 22: 2018/08/03. 43: 2023/03/22
51: A61K; C07K
71: University of Leicester, Omeros Corporation
72: BRUNSKILL, Nigel John, DEMOPULOS, Gregory A., DUDLER, Thomas, SCHWAEBLE, Hans-Wilhelm
33: US 31: 62/275,025 32: 2016-01-05
54: METHODS FOR INHIBITING FIBROSIS IN A SUBJECT IN NEED THEREOF
00: -
In one aspect, the invention provides methods for treating, inhibiting, alleviating or preventing fibrosis in a mammalian subject suffering, or at risk of developing a disease or disorder caused or exacerbated by fibrosis and/or inflammation. In one embodiment, the invention provides methods of treating a subject suffering from renal fibrosis. In one embodiment, the invention provides methods of reducing proteinuria in a subject suffering from a renal disease or condition associated with proteinuria. The methods comprise the step of administering, to a subject in need thereof, an amount of a MASP-2 inhibitory agent effective to inhibit MASP-2-dependent complement activation.

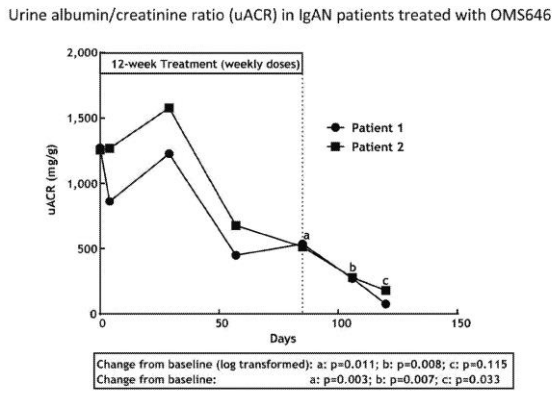

21: 2018/05750. 22: 2018/08/28. 43: 2023/04/05
51: B29C; B60S
71: TRYDEL RESEARCH PTY LTD
72: DOWEL, Terence
33: AU 31: 2016900554 32: 2016-02-17

54: IMPROVED APPARATUS FOR SEALING AND INFLATION OF DAMAGED INFLATABLE ARTICLES, SUCH AS PUNCTURED TIRES

00: -

An apparatus for repairing and/or inflating a damaged and/or deflated inflatable article, such as a punctured and/or flat tire, includes a container for receiving and retaining for dispensing, a sealant composition and a compressor assembly which is releasably connectable to the container. The container has associated therewith a valve assembly which allows for controlled dispensing of the sealant composition from the container to the damaged and/or deflated inflatable article. The container is progressively and selectively movable between respective first and second positions/configurations. In the first position/configuration, the container is disposed substantially parallel to the compressor assembly and in the second position/configuration the container is disposed at substantially right angles to the compressor assembly. The first and second positions/configurations correspond to storage and dispensing positions respectively for the sealant composition from the container.

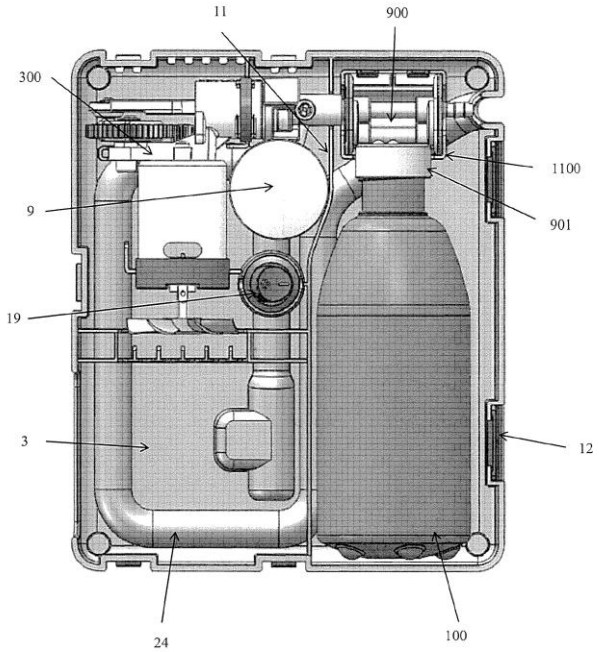

21: 2018/06024. 22: 2018/09/07. 43: 2023/04/05
51: G01N; H01H; G06Q
71: MESHNET PTY LTD
72: STRHARSKY, Justin, BOSCI, Hourann, DEL BORRELLO, Michael, PUDDY, Iain Geoffrey John, MEARES, Ian Goldsmith, BRADFORD, Danon
33: AU 31: 2016900429 32: 2016-02-09

54: METHOD AND SYSTEM FOR PREDICTION OF A STATE OF AN ASSET

00: -

A method for prediction of a state of an asset comprises receiving sensor data from one or more sensors measuring a state of the asset over time; generating a comparison measurement of the sensor data over time; identifying when the comparison indicates a state of the asset has changed; creating an output when the state is indicated as having changed, as a prediction of a particular state of the asset.

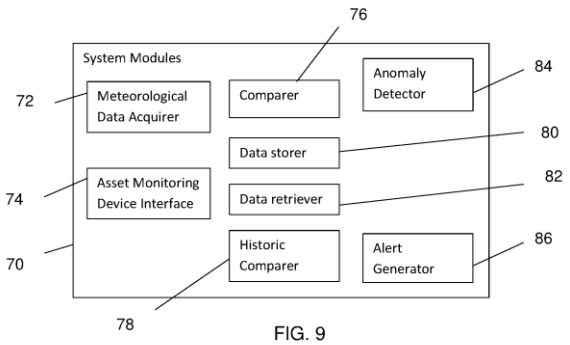

FIG. 9

21: 2018/07034. 22: 2018/10/22. 43: 2023/04/05
51: F01K; F02C
71: 8 RIVERS CAPITAL, LLC
72: FORREST, Brock Alan, FETVEDT, Jeremy Eron, MCGRODDY, Peter Michael
33: US 31: 62/325,752 32: 2016-04-21
54: SYSTEMS AND METHODS FOR OXIDATION OF HYDROCARBON GASES
00: -
The present disclosure relates to systems and methods wherein a dilute hydrocarbon stream can be oxidized to impart added energy to a power production system. The oxidation can be carried out without substantial combustion of the hydrocarbons. In this manner, dilute hydrocarbon streams that would otherwise be required to undergo costly separation processes can be efficiently utilized for improving the power production system and method. Such systems and methods particularly can utilize dilute hydrocarbon stream including a significant amount of carbon dioxide, such as may be produced in hydrocarbon recovery process, such as enhanced oil recovery or conventional hydrocarbon recovery processes.

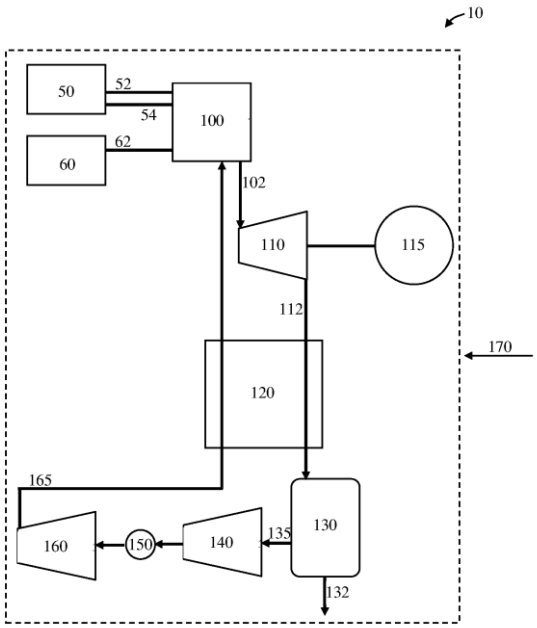

21: 2018/07056. 22: 2018/10/23. 43: 2023/04/05
51: A61K
71: TAKEDA PHARMACEUTICAL COMPANY LIMITED
72: HOLMES, Kevin, NORTON, Angela W., PAN, Clark
33: US 31: 62/318,003 32: 2016-04-04
54: CONJUGATED C1 ESTERASE INHIBITOR AND USES THEREOF
00: -
The present invention provides, among other things, a conjugated Cl-INH for improved treatment of complement-mediated disorders, including hereditary angioedema (HAE). In some embodiments, a conjugated Cl-INH provided by the present invention is a PEGylated Cl-INH. In some embodiments, a conjugated Cl-INH provided by the present invention is a polysialic acid (PSA) conjugated Cl-INH.

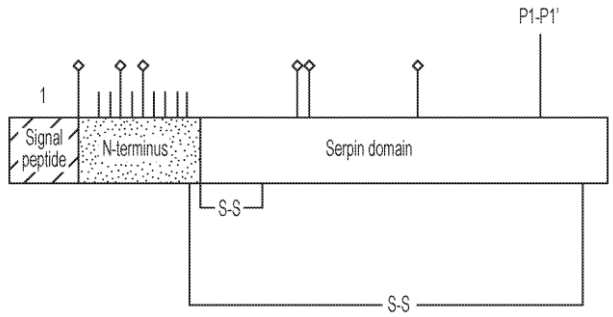

Beinrohr et al. *JBC 2007* ***280***; *21100*

21: 2018/07294. 22: 2018/10/31. 43: 2023/03/08
51: A23G; A23L; A23P
71: Société des Produits Nestlé S.A.
72: ABU-HARDAN, Madian Othman, BONARIUS, Gijsbert Adriaan, CLEMENT, Patrick, MARION, Sophie, CLARK, Benedict Timothy, JONES, Stuart David Hamer
33: EP(CH) 31: 16163531.3 32: 2016-04-01
54: CONFECTIONERY COMPOSITION COMPRISING BRAN-LIKE MATERIAL
00: -

There is described an confectionery composition comprising edible particulate material comprising from 80% to 100% by weight based on total weight of the material of a processable, microbially released, flavour acceptable bran-like material, characterized by the following parameters: (i) mean particle size by volume (Vol. MPS) of from 5 to 100 microns; (ii) volume particle size distribution (Vol. PSD) characterized by the parameters: $D_{90,3}$ less than or equal to 350 microns, and $D_{50,3}$ less than or equal to 50 microns, and optionally $D_{10,3}$ less than or equal to 15 microns, (iii) mean particle sphericity as measured by a S_{mean} of greater than or equal to 0.75; (iv) where processable means has oil holding capacity (OHC) of from 0.7 to 1.5; (v) where microbially released means material has common microbes below given limits (preferably free of common microbes) (vi) where flavour acceptable denotes a lipase activity (LA) and a peroxidase activity (PA) both less than or equal to 2 U/g and optionally a low degree of roasted flavour notes as defined herein. The bran-like material used in the confectionery compositions may added as a bulk ingredient to replace sugar and/or to provide confectionery fillings and/or coatings having improved hiding ability when used as layers in multilayer confectionery products.

21: 2018/07730. 22: 2018/11/16. 43: 2023/03/08
51: A61K; A61Q
71: Colgate-Palmolive Company
72: DOGU, Nihal, VEMISHETTI, Kavita
54: AN ORAL CARE COMPOSITION
00: -
The present invention relates to an oral care composition for use in the treatment or prevention of erosive tooth demineralization, plaque, and caries. This oral care composition includes zinc lactate dihydrate, a stannous ion source, at least one phosphate salt, and a buffer system.

21: 2018/07852. 22: 2018/11/21. 43: 2023/04/05
51: A61K; A61P
71: NOVABIOTICS LIMITED
72: O'NEIL, Deborah
33: US 31: 62/346,969 32: 2016-06-07
33: GB 31: 1609940.0 32: 2016-06-07

54: MICROPARTICLES COMPRISING A SULPHUR-CONTAINING COMPOUND
00: -
The present invention provides microparticles comprising a sulphur-containing compound, such as cysteamine, or a pharmaceutically acceptable salt, hydrate or ester thereof. Also provided is a composition comprising the microparticles and a stabilizing agent.

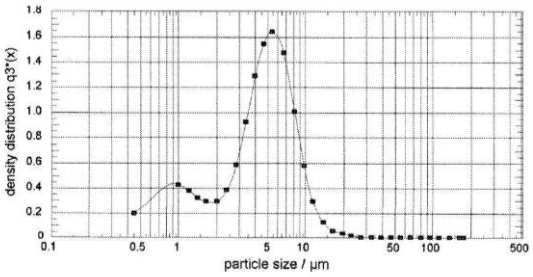

21: 2018/08057. 22: 2018/11/28. 43: 2023/03/08
51: A61K; A61P; C07D
71: Bayer Pharma Aktiengesellschaft
72: THALER, Tobias, PLATZEK, Johannes, GUIMOND, Nicolas
33: EP(DE) 31: 16167652.3 32: 2016-04-29
54: SYNTHESIS OF INDAZOLES
00: -
The present invention relates to a novel method of preparing a 2-substituted indazole of structure:(I), to intermediate compounds, and to the use of intermediate compounds for the preparation of said 2-substituted indazole.

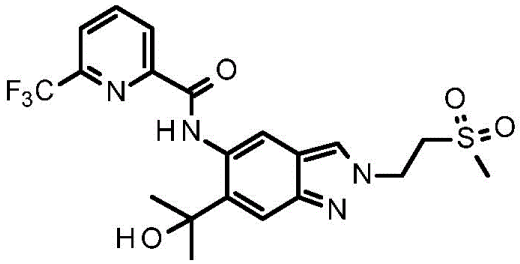

(I)

21: 2018/08609. 22: 2018/12/20. 43: 2023/04/05
51: A23B; A23L; A61L; B01D
71: XEDA INTERNATIONAL S.A.

72: SARDO, Alberto, SARDO, Stéfano
33: FR 31: 1655717 32: 2016-06-20
33: FR 31: 1658046 32: 2016-08-30
54: METHOD AND ASSEMBLY FOR THE TREATMENT OF THE ATMOSPHERE IN A STORAGE SPACE FOR VEGETABLE PRODUCTS
00: -
The method for treating the atmosphere in a storage space (3) for vegetable products (5) having a volume of more than 200 m3 comprises at least one step in which the atmosphere is brought into contact with a liquid flow by having the atmosphere flow through a packing.

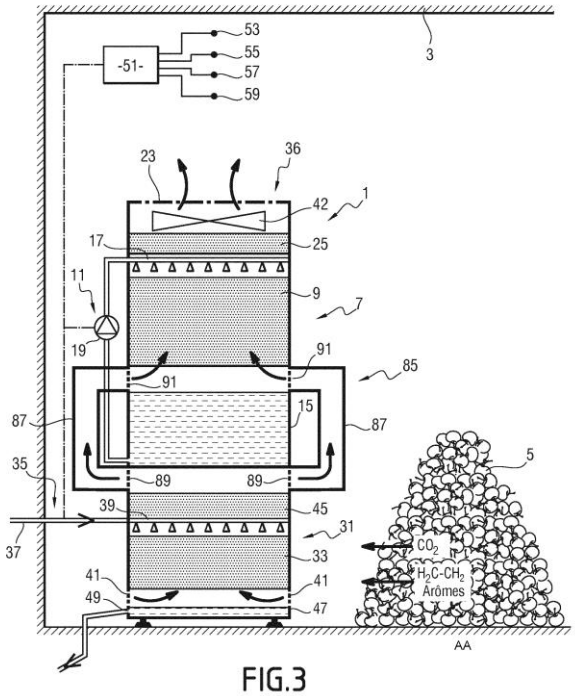

FIG.3

AA Aromas

21: 2019/00937. 22: 2019/02/13. 43: 2023/03/08
51: A61K; A61P
71: ALX ONCOLOGY INC.
72: PONS, JAUME, SIM, BANG JANET, WAN, HONG, KUO, TRACY CHIA-CHIEN, KAUDER, STEVEN ELLIOT, HARRIMAN, WILLIAM DON, IZQUIERDO, SHELLEY
33: US 31: 62/515,480 32: 2017-06-05
33: US 31: 62/397,752 32: 2016-09-21
54: ANTIBODIES AGAINST SIGNAL-REGULATORY PROTEIN ALPHA AND METHODS OF USE
00: -
Provided herein,*inter alia*, are isolated antibodies that bind an extracellular domain of a human SIRP-α v1 polypeptide (e.g., the D1 domain), an extracellular domain of a human SIRP-α v2 polypeptide, or both. In some embodiments, the antibodies also bind an extracellular domain of a monkey SIRP-α polypeptide, an extracellular domain of a mouse SIRP-α polypeptide, an extracellular domain of a human SiRP-β polypeptide, and/or an extracellular domain of a human SIRP-γ polypeptide. In some embodiments, the antibodies block or do not binding between an extracellular domain of a human SIRP-α polypeptide and an IgSF domain of a human CD47 polypeptide, while in some embodiments, the antibodies reduce the affinity of a human SIRP-α polypeptide for binding an IgSF domain of a human CD47 polypeptide. Further provided herein are methods, polynucleotides, vectors, and host cells related thereto.

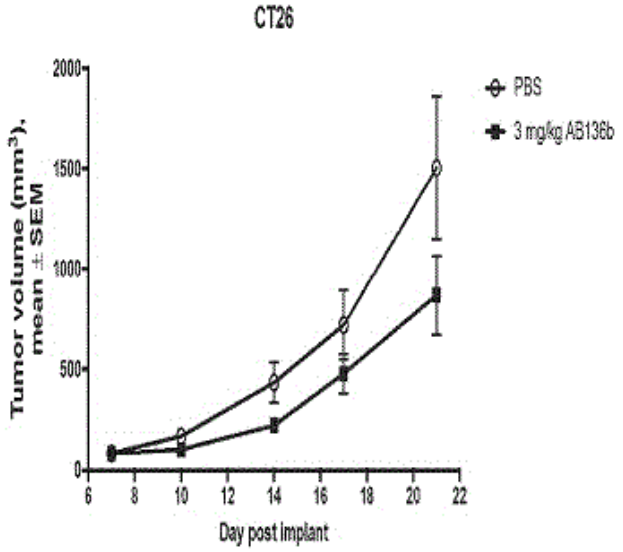

21: 2019/01286. 22: 2019/02/28. 43: 2023/03/08
51: C07K; C12N
71: VACCINEX, INC.
72: SMITH, ERNEST, SHI, SHUYING
33: US 31: 62/370,009 32: 2016-08-02
54: IMPROVED METHODS FOR PRODUCING POLYNUCLEOTIDE LIBRARIES IN VACCINIA VIRUS/EUKARYOTIC CELLS
00: -
This disclosure provides an improved method of constructing a library of polynucleotides of interest in a poxvirus, e.g., vaccinia virus vector system, where the polynucleotides of interest encode polypeptides

of interest. The method comprises constructing the library in the presence of an inhibitor of poxvirus assembly, e.g., rifampicin, which allows construction of libraries with higher complexity and diversity than previous methods.

21: 2019/02179. 22: 2019/04/08. 43: 2023/03/09
51: B23K; C25C
71: Glencore Technology Pty Limited
72: ASLIN, Nigel, ERIKSSON, Per Ola
54: IMPROVEMENTS IN HANGER BARS
00: -
A hanger bar for an electrowinning cell, the hanger bar comprising a bar portion and one or more contact portions adapted, in use, to be brought into contact with an electrical conductor, the contact portions being fabricated from an electrically conductive material, and wherein a welded seal is formed between the bar portion and the contact portions in order to minimise corrosion.

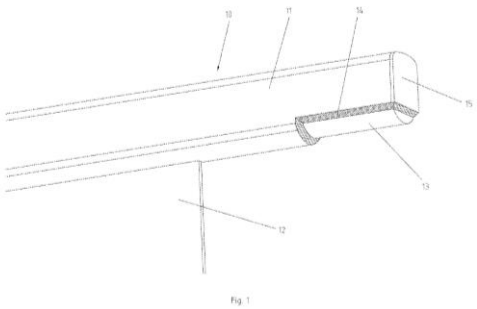

21: 2019/02933. 22: 2019/05/10. 43: 2023/03/01
51: A61K; A61P
71: University of Leicester, Omeros Corporation
72: BRUNSKILL, Nigel John, DEMOPULOS, Gregory A., DUDLER, Tom, SCHWAEBLE, Hans-Wilhelm
33: US 31: 62/407,979 32: 2016-10-13
54: METHODS FOR REDUCING PROTEINURIA IN A HUMAN SUBJECT SUFFERING FROM IMMUNOGLOBULIN A NEPHROPATHY
00: -
In one aspect, the invention provides methods for reducing proteinuria in a human subject suffering, or at risk of developing Immunoglobulin A Nephropathy (IgAN). The methods comprise the step of administering, to a subject in need thereof, an amount of a MASP-2 inhibitory antibody effective to inhibit MASP-2-dependent complement activation.

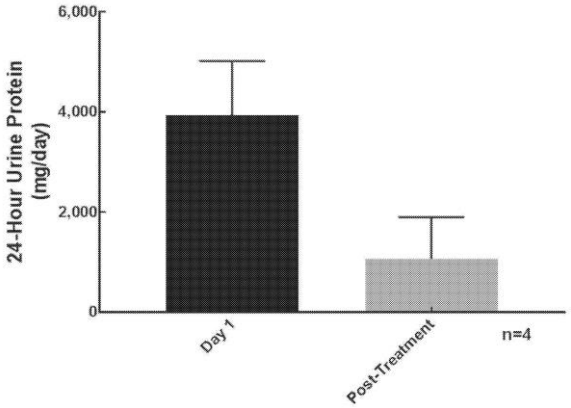

21: 2019/03833. 22: 2019/06/13. 43: 2023/04/05
51: A61K; A61P
71: “PHARMENTERPRISES EURASIA” LIMITED LIABILITY COMPANY
72: RYDLOVSKAYA, Anastasia Vladimirovna, NEBOLSIN, Vladimir Evgenievich, KROMOVA, Tatyana Alexandrovna
33: RU 31: 2017118351 32: 2017-05-26
54: NOVEL MULTITARGET DRUG FOR TREATING DISEASES IN MAMMALS
00: -
The invention relates to the chemistry of organic compounds, pharmacology and medicine and concerns therapies for obesity, psoriasis, Crohn’s disease, colitis, irritable bowel syndrome, diarrhoea, nausea and vomiting, as well as a number of other diseases associated with the activity of cathepsin S, cannabinoid receptors type 1, tachykinin receptors type 1 and 2, prokineticin receptors type 1 and 2, bradykinin receptor type 1, melanocortin receptor MC4R, serotonin receptors 5-HT2B and NB-kB signalling pathway, by using benzyl (2S)-2-[2-(4-hydroxyphenyl)acetamido]-3-phenylpropanoate compound (I). This compound and pharmaceutically acceptable adducts, hydrates and solvates thereof are a cathepsin S inhibitor, cannabinoid receptors type 1 agonist, tachykinin receptors type 1 and 2 antagonist, prokineticin receptors type 1 and 2 antagonist, bradykinin receptor type 1 antagonist, melanocortin receptors MC4R antagonist, serotonin receptors 5-HT2B antagonist, and NB-kB signalling pathway inhibitor. The present invention also relates to pharmaceutical compositions comprising a therapeutically effective amount of the compound according to the invention.

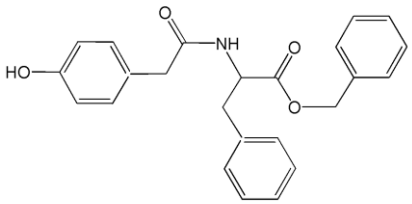

(I)

21: 2019/03937. 22: 2019/06/18. 43: 2023/03/17
51: C07D
71: Syngenta Participations AG
72: JONES, Ian Kevin, HONE, John, GEORGE, Neil
33: GB 31: 1622006.3 32: 2016-12-22
54: POLYMORPHS
00: -
The present invention relates to solid forms of the insecticide of formula (I): (I) compositions comprising the solid forms and methods of their use as insecticides.

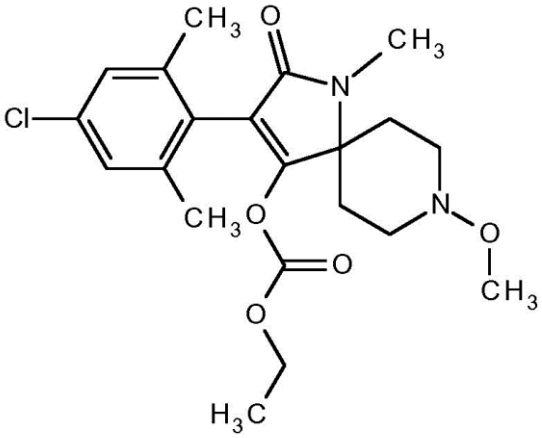

(I)

21: 2019/05210. 22: 2019/08/07. 43: 2023/03/10
51: E21D
71: INNOVATIVE MINING PRODUCTS (PTY) LTD
72: ABREU, Rual, GOVENDER, Luendren
54: INSTALLATION TOOL FOR A ROCK BOLT
00: -
The invention provides a rock bolt installation tool for use in the installation of a rock bolt assembly into a predrilled rock hole, which tool includes a drive shaft having a proximal end, which is adapted to engage with a drill rig, and a distal end, a socket in the distal end that includes a first containment portion, of a first diameter, which has a base and a second containment portion, of a second diameter, between the first containment portion and the second end, wherein the first containment portion is adapted to receive a nut of the rock bolt assembly, wherein the second containment portion is adapted to receive a load-indicator of the rock bolt assembly, and wherein the base and the second end are adapted to provide surfaces against which the nut and a spherical seat of the rock bolt assembly respectively engage to be driven into the rock hole.

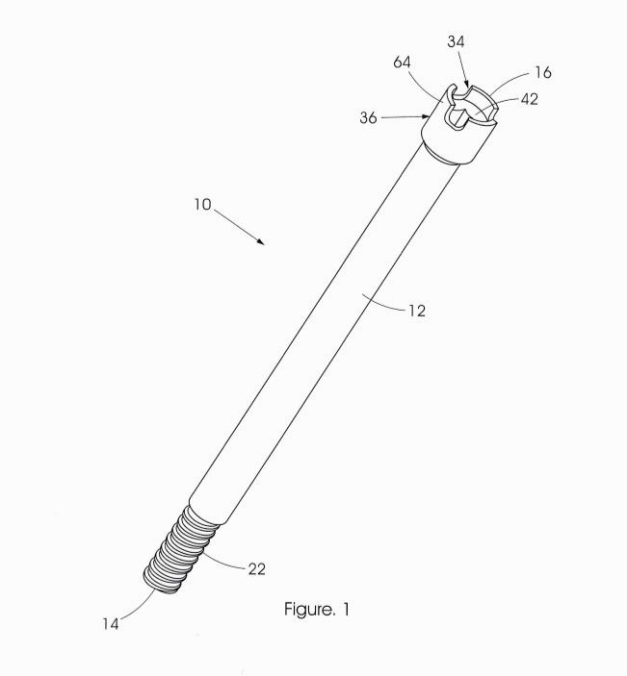

21: 2019/05380. 22: 2019/08/14. 43: 2023/03/22
51: A61K
71: Valent BioSciences LLC
72: SASAKAWA, Mitsuhiro, SHARMA, Parvesh, DEVISETTY, Bala N.
33: US 31: 62/479,524 32: 2017-03-31
54: 1-AMINO-1-CYCLOPROPANECARBOXYLIC ACID HUDROCHLORIDE FORMULATIONS
00: -
The present invention relates to 1-amino-1-cyclopropanecarboxylic acid hydrochloride salt formulations and methods of their use.

21: 2019/05404. 22: 2019/08/15. 43: 2023/03/22
51: H04W
71: Huawei Technologies Co., Ltd.
72: LI, Chaojun, CHENG, Yan
33: PCT/CN 31: 2017/072899 32: 2017-02-04
54: INFORMATION SENDING METHOD AND INFORMATION RECEIVING METHOD AND

APPARATUS AND COMPUTER READABLE STORAGE MEDIUM

00: -

An information transmitting and receiving method, comprising: a network device determines configuration information of a number N of downlink control channel regions, the N downlink control channel regions comprising a first downlink control channel region, the configuration information of the N downlink control channel regions comprising configuration information of the first downlink control channel region, and N being a positive integer; the network device transmits to a terminal device the configuration information of the N downlink control channel regions; and the terminal device determines the N downlink control channel regions according to the configuration information of the N downlink control channel regions. The described method can achieve flexible configuration of the downlink control channel regions, and thereby, downlink resources are flexibly used.

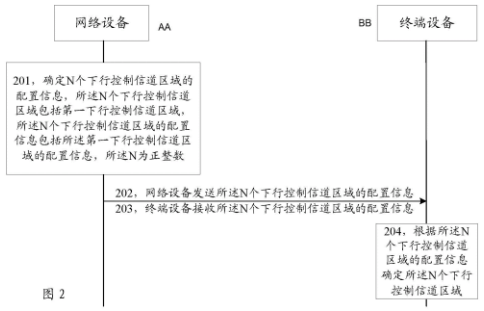

图 2

201 DETERMINE CONFIGURATION INFORMATION OF A NUMBER N OF DOWNLINK CONTROL CHANNEL REGIONS, THE N DOWNLINK CONTROL CHANNEL REGIONS COMPRISING A FIRST DOWNLINK CONTROL CHANNEL REGION, THE CONFIGURATION INFORMATION OF THE N DOWNLINK CONTROL CHANNEL REGIONS COMPRISING CONFIGURATION INFORMATION OF THE FIRST DOWNLINK CONTROL CHANNEL REGION, AND N BEING A POSITIVE INTEGER
202 THE NETWORK DEVICE TRANSMITS THE CONFIGURATION INFORMATION OF THE N DOWNLINK CONTROL CHANNEL REGIONS
203 THE TERMINAL DEVICE RECEIVES THE CONFIGURATION INFORMATION OF THE N DOWNLINK CONTROL CHANNEL REGIONS
204 DETERMINE THE N DOWNLINK CONTROL CHANNEL REGIONS ACCORDING TO THE CONFIGURATION INFORMATION OF THE N DOWNLINK CONTROL CHANNEL REGIONS
AA NETWORK DEVICE
BB TERMINAL DEVICE

21: 2019/05727. 22: 2019/08/30. 43: 2023/04/05
51: A61K; A61P
71: ADC THERAPEUTICS SA, MEDIMMUNE LIMITED
72: VAN BERKEL, Patricius Hendrikus Cornelis, WUERTHNER, Jens, HARTLEY, John, ZAMMARCHI, Francesca
33: GB 31: 1706223.3 32: 2017-04-20
33: GB 31: 1706224.1 32: 2017-04-20
33: GB 31: 1706225.8 32: 2017-04-20
33: GB 31: 1706226.6 32: 2017-04-20
33: GB 31: 1706227.4 32: 2017-04-20
33: GB 31: 1706228.2 32: 2017-04-20
33: GB 31: 1706229.0 32: 2017-04-20
33: GB 31: 1706230.8 32: 2017-04-20
33: GB 31: 1706231.6 32: 2017-04-20

54: COMBINATION THERAPY WITH AN ANTI-AXL ANTIBODY-DRUG CONJUGATE

00: -

The present disclosure relates to combination therapies for the treatment of pathological conditions, such as cancer. In particular, the present disclosure relates to combination therapies comprising treatment with an Antibody Drug Conjugate (ADC) and a secondary agent.

21: 2019/05742. 22: 2019/08/30. 43: 2023/03/22
51: F24J; G01S; H01L; H02S
71: Array Technologies, Inc.
72: CORIO, Ronald P.
33: US 31: 62/466,235 32: 2017-03-02

54: SPRING COUNTER-BALANCE ASSEMBLIES AND SOLAR TRACKERS INCORPORATING SPRING COUNTER-BALANCE ASSEMBLIES

00: -

A solar tracker assembly is provided which includes a support column, a torque tube or torsion beam connected to the support column, a mounting mechanism attached to the torque tube or torsion beam, a drive system connected to the torque tube or torsion beam, and a spring counter- balance assembly connected to the torque tube or torsion beam. An exemplary spring counter- balance assembly comprises a bearing housing and a bushing disposed within the bearing housing and configured to be slideably mounted onto the torque tube or torsion beam, and one or more compressible cords made of a flexible material. The compressible cords are located between the bushing and the bearing housing and provide damping during rotational movement of the solar tracker assembly. An exemplary spring counter-balance assembly is provided including at least one top bracket and at least one bottom bracket, at least one spring, a damper, and a bracket. An exemplary spring counter-balance assembly comprises a bearing housing and a bushing disposed within the bearing housing and configured to be slideably mounted onto the torque tube or torsion beam. The spring counter-balance assembly may include at least one coil spring and a rotational stop. The bushing may be made of an elastomeric material and define one or more air spaces.

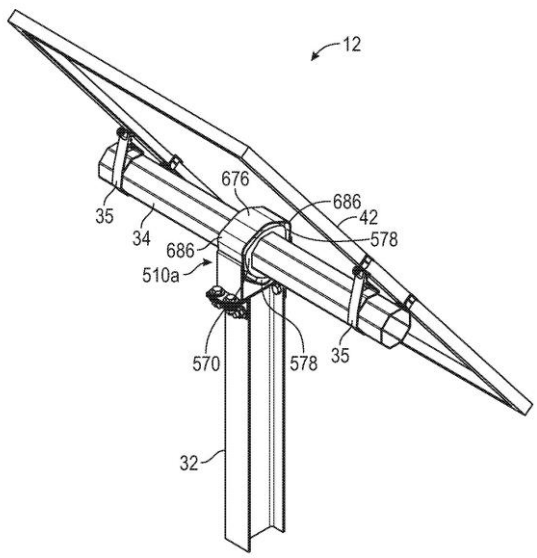

21: 2019/06201. 22: 2019/09/19. 43: 2023/01/06
51: A62C; G08B
71: Oy Halton Group Ltd.
72: LIVCHAK, Andrey V., SCHROCK, Derek W., LYONS, Gregory A., SANDUSKY, Jimmy, SUNDERLIN, Kyle, MEREDITH, Philip J., HARLOW, Nicholas
33: US 31: 62/473,747 32: 2017-03-20
54: FIRE SAFETY DEVICES METHODS AND SYSTEMS
00: -
A fire safety system particularly adapted for commercial kitchen applications provides control of exhaust levels for energy efficiency and intelligently responds to fires or fire risks. In embodiments, systems may provide early warning of fire hazards or impending fires. Embodiments employ probabilistic estimates with alarms that can be canceled. Embodiments employ classifiers that can make use of alarm cancellations as a mechanism for supervised learning.

21: 2019/06398. 22: 2019/09/27. 43: 2023/03/22
51: B22C
71: Nemak, S.A.B. de C.V.
72: BARANZKE, Matthias, STAUDT, Ingo
33: DE 31: 10 2017 106 775.2 32: 2017-03-29
54: CASTING CORE AND METHOD FOR THE PRODUCTION THEREOF
00: -
The present invention relates to a casting core (1), which has the basic form of a hollow body, wherein the casting core (1) is formed from a moulding material which consists of a mixture that is formed from a moulding sand and a binder as well as optionally additives that are added to adjust its properties, and relates to a method for the production thereof. The casting core (1) according to the invention can be produced in an easy way. This is achieved by the casting core (1) being divided into at least two subsegments (9-17) and by moulding elements (28a-30b) which interact with one another in a form-fitting manner and by means of which the subsegments (9-17) arranged adjacent to one another are fixed immovably with respect to one another, at least in one direction (LR.UR), by a form fit being provided at the peripheral sides with which subsegments (9-17) that are arranged adjacent to one another butt against one another, or being provided in the vicinity of these peripheral sides.

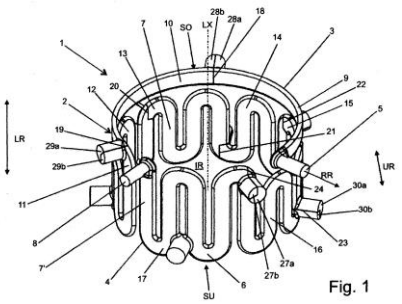

21: 2019/06541. 22: 2019/10/04. 43: 2023/03/22
51: C07D A61K
71: IL DONG PHARMACEUTICAL CO., LTD.
72: KANG, Jae-Hoon, LEE, Hong-Sub, LEE, Yoon-Suk, JEONG, Jin-Ah, KWON, Sung-Wook, KIM, Jeong-Guen, KIM, Kyung-Sun, SONG, Dong-Keun, PARK, Sun-Young, KIM, Kyeo-Jin, CHOI, Ji-Hye, HWANG, Hey-Min
33: KR 31: 10-2017-0047393 32: 2017-04-12
33: KR 31: 10-2018-0042545 32: 2018-04-12
54: ISOXAZOLE DERIVATIVES AS NUCLEAR RECEPTOR AGONISTS AND USES THEREOF
00: -
The present invention relates to isoxazole derivatives, including pharmaceutical compositions and for the preparation of isoxazole derivatives. And more particularly the present invention provided a pharmaceutical composition of isoxazole derivatives for activation of Farnesoid X receptor(FXR, NR1H4).

21: 2019/06641. 22: 2019/10/08. 43: 2023/04/25
51: A45C
71: MLAMBO, Michael Zipho
72: MLAMBO, Michael Zipho
33: ZA 31: 2018/06662 32: 2018-10-08
54: CELL PHONE COVER
00: -
The invention provides a cover for a cell phone which includes a body having quadrilateral panel, with an inner surface and an outer surface, and an integral perimeter lip upstanding from the inner surface, wherein the panel has a window aperture through which a barcode of a card, sandwiched between the cover and the cell phone, is visible.

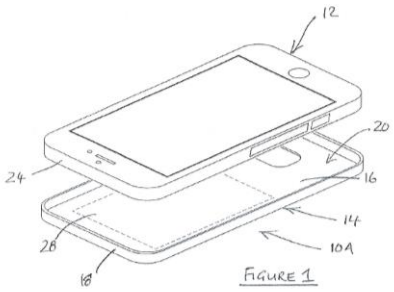

21: 2019/06663. 22: 2019/10/09. 43: 2023/03/22
51: C04B; H05K
71: Christy Catalytics, LLC, OSBORNE, Brian
72: OSBORNE, Brian
33: US 31: 62/483,507 32: 2017-04-10
54: TARGET TILES FOR AN AUTOTHERMAL REFORMATION/SECONDARY REFORMATION UNIT
00: -
A corrosion resistant refractory ceramic hexagonal target tile body for use covering a catalyst, including a generally flat hexagonal portion and a plurality of generally right circular cylindrical aperture portions extending therethrough, wherein the hexagonal tile body has a thickness of about 89 mm and a width of about 42 cm and is 13 percent yttria fully stabilized YSZ. Each respective aperture has a diameter of about 19 mm.

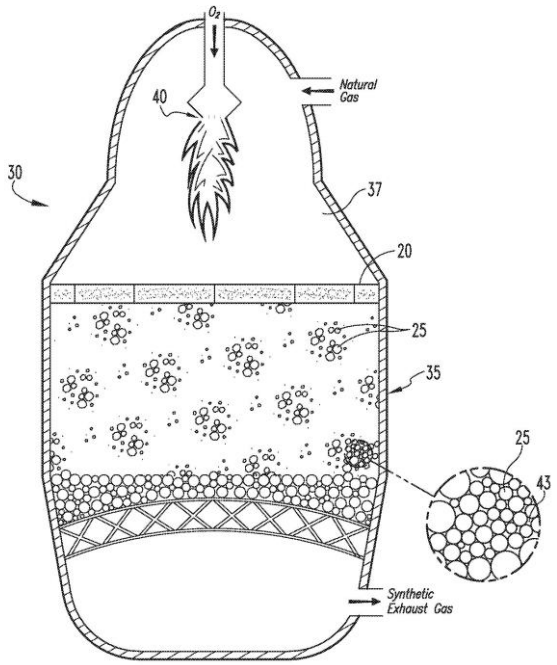

21: 2019/06664. 22: 2019/10/09. 43: 2023/03/22
51: H04L
71: QUALCOMM Incorporated
72: LI, Jian, XU, Changlong, WEI, Chao, HOU, Jilei
33: PCT/CN 31: 2017/079903 32: 2017-04-10
54: AN EFFICIENT INTERLEAVER DESIGN FOR POLAR CODES
00: -
Aspects of the disclosure relate to wireless communication devices configured to encode information blocks to produce code blocks and interleave the code blocks utilizing an interleaver including a plurality of rows and a plurality of columns, where the number of columns of the interleaver varies between the rows. In some examples, the interleaver includes a right isosceles triangle-shaped matrix of rows and columns. In other examples, the interleaver includes a trapezoid-shaped matrix of rows and columns.

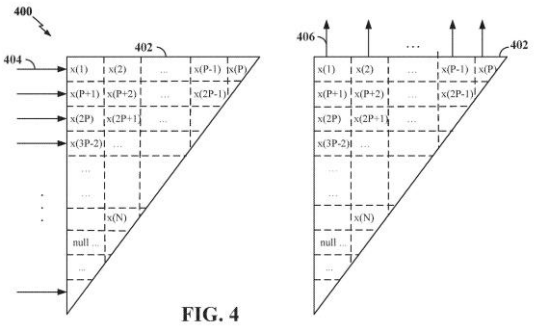

FIG. 4

21: 2019/06872. 22: 2019/10/18. 43: 2023/05/08
51: B62D
71: Mechanical System Dynamics Pty Ltd
72: PREM, Hans, MAI, Kinh-Luan Viet
33: AU 31: 2018903943 32: 2018-10-18
54: IMPROVEMENTS IN TRAILERS AND COMBINATION VEHICLES
00: -
A trailer for use in a combination vehicle for road transport of heavy goods. The trailer comprises a semi-trailer body adapted to carry the goods and which includes a trailing axle set at its rear. The trailer also includes a dog trailer mounted beneath the front of said semi-trailer body. The dog trailer comprises: a first frame portion connected to the semi-trailer body by a first pivoting connection and carrying a rear axle set, a second frame portion connected to the first frame portion by a second pivoting connection and carrying a front axle set, and a drawbar assembly attached to the second frame portion by a third pivoting connection.

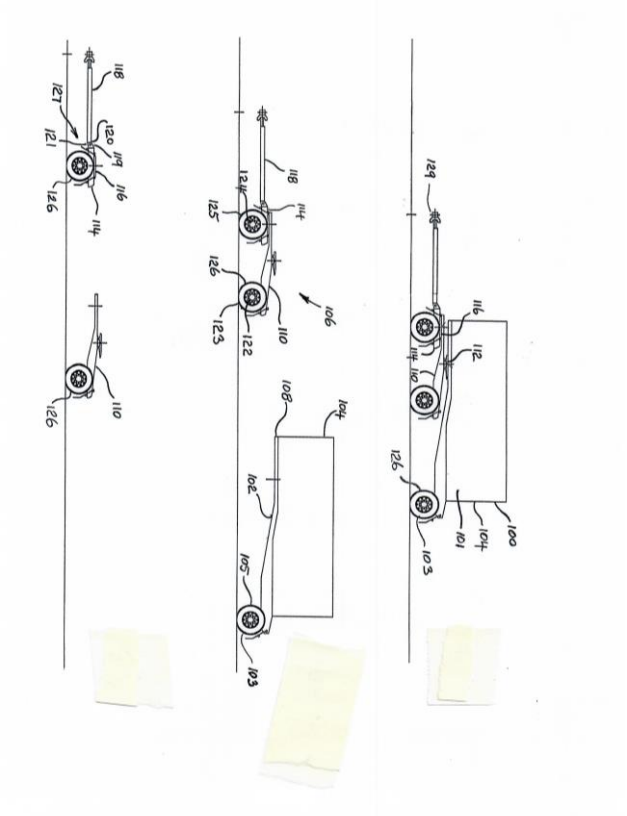

21: 2019/06917. 22: 2019/10/21. 43: 2023/03/01
51: A01K; A61K; A61P; C07K; C12N; C12P
71: Teijin Pharma Limited
72: EGUCHI, Hiroshi, TANOKURA, Akira, TAKAGI, Kenichiro, KATO, Hirotsugu, YAMAMURA, Satoshi, NAMIKI, Naoko
33: JP 31: 2017-106529 32: 2017-05-30
54: ANTI-IGF-I RECEPTOR ANTIBODY
00: -
The present invention provides an anti-IGF-I receptor antibody that binds specifically to an IGF-I receptor of a vertebrate and has the proliferation-inducing activity of a vertebrate-derived cell, or a fragment thereof, or derivatives of these.

21: 2019/06940. 22: 2019/10/22. 43: 2023/05/02
51: A63F
71: RHT United (Pty) Ltd.
72: OPPERMAN, Richard Henry Theo, CONRADIE, Henck
33: ZA 31: 2018/07040 32: 2018-10-23
54: METHOD OF RENOVATING A DOMESTIC PROPERTY
00: -
A method of renovating a domestic property which includes identifying domestic renovation projects,

composing domestic renovation teams, assigning domestic renovation crews to the teams, setting a same timeframe for completion of the domestic property renovation projects, conducting the renovation projects within the timeframe, and comparing outcomes of the domestic renovation projects.

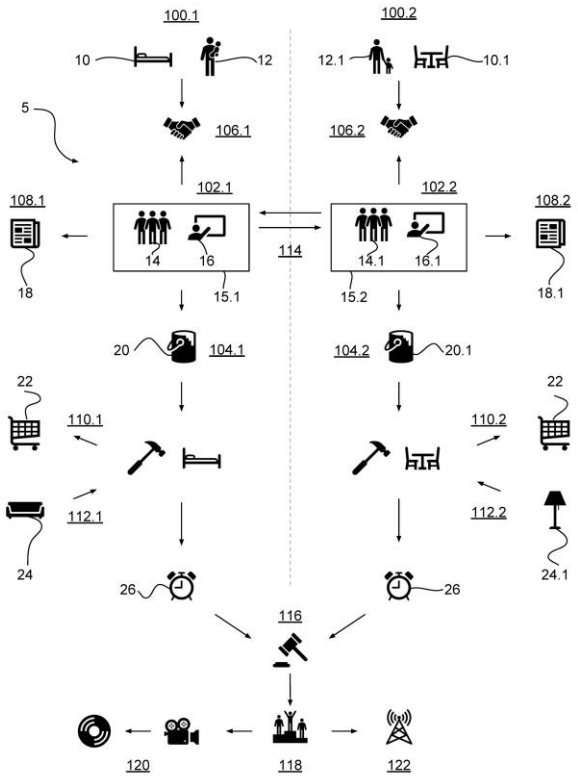

21: 2019/06978. 22: 2019/10/23. 43: 2023/04/25
51: H01M
71: STOREN TECHNOLOGIES INC.
72: D'ANZI, Angelo, BROVERO, Carlo Alberto, PIRACCINI, Gianluca, TAPPI, Maurizio
33: US 31: 62/476,936 32: 2017-03-27
54: AN ADVANCED ELECTROLYTE MIXING METHOD FOR ALL VANADIUM FLOW BATTERIES
00: -
A flow battery has an electrochemical stack, a positive electrolyte, a negative electrolyte, a positive electrolyte tank, and a negative electrolyte tank. The positive electrolyte and the negative electrolyte are respectively stored in the positive and negative tanks. A positive electrolyte pump, a negative electrolyte pump, a mixing pump is embedded in the bypass pipeline or in a dedicate circuit. The positive and the negative tanks, are mutually connected by means of a connection pipe, said connection pipe is embedded just immediately above the electrolyte levels.

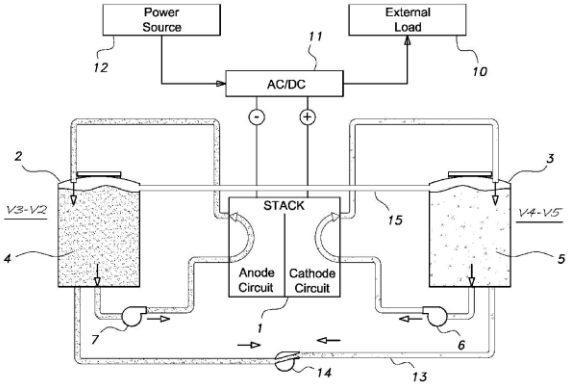

21: 2019/07755. 22: 2019/11/22. 43: 2023/04/05
51: C07D
71: CHEMOCENTRYX, INC.
72: FAN, Pingchen, LANGE, Christopher W., LUI, Rebecca M., MALATHONG, Viengkham, MALI, Venkat Reddy, PUNNA, Sreenivas, ZENG, Yibin, ZHANG, Penglie
33: US 31: 62/513,025 32: 2017-05-31
54: 5-5 FUSED RINGS AS C5A INHIBITORS
00: -
The present disclosure provides, inter alia, Compounds of Formula (I) (I) or pharmaceutically acceptable salts thereof that are modulators of the C5a receptor. Also provided are pharmaceutical compositions and methods of use including the treatment of diseases or disorders involving pathologic activation from C5a and non-pharmaceutical applications.

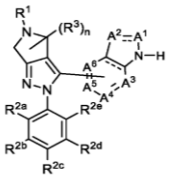

(I)

21: 2019/07839. 22: 2019/11/26. 43: 2023/03/17
51: G06Q
71: nChain Holdings Limited
72: JOSEPH, Daniel, BARTOLUCCI, Silvia
33: GB 31: 1709871.6 32: 2017-06-20
33: GB 31: 1709868.2 32: 2017-06-20

54: SYSTEM AND METHOD OF MULTI-ROUND TOKEN DISTRIBUTION USING A BLOCKCHAIN NETWORK

00: -

A computer-implemented method to participate in a token transfer process for transferring a first quantity of token from a sender node to a recipient node using a blockchain is disclosed. The token transfer process includes a plurality of participating nodes and execution of a set of indirect token transactions between multiple pairs of the participating nodes. The method is implemented at a participating node and includes: obtaining a subset of the set of indirect token transactions, the subset including only those transactions for which the participating node is either an input node or an output node, wherein the set of indirect token transactions is generated based on the first quantity of tokens and a predefined number of transaction rounds in the token transfer process; for each indirect token transaction in the subset, collaborating with a respective second participating node included in the indirect token transaction to generate a commitment channel for the indirect token transaction between the participating node and the second participating node; and collaborating with all other participating nodes in executing the indirect token transactions of the subset using the generated commitment channels.

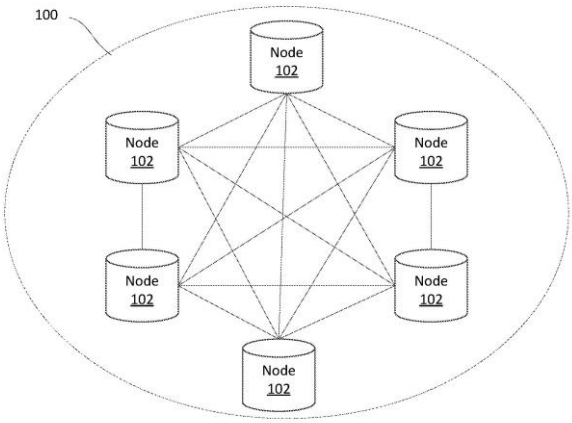

21: 2019/07862. 22: 2019/11/27. 43: 2023/03/22
51: B65D
71: British American Tobacco (Investments) Limited
72: BRAY, Andrew Jonathan, FALLON, Gary, GIBSON, Paul
33: GB 31: 1421707.9 32: 2014-12-05

54: PACK OF TOBACCO INDUSTRY PRODUCTS

00: -

Pack (27) having a group of tobacco industry products wrapped in a laminate (2) to form a bundle (22). The pack has a base (28) containing the bundle, and a lid (30) mounted to the base for rotation between open and closed positions. The laminate has an outer layer (3) having a first cut (5) that defines an outer layer region bounded by said first cut and, an inner layer (4) having a second cut (6) that defines an inner layer region bounded by said second cut. A part of the outer layer region is attached to an inside surface of the lid such that, as the lid is rotated into its open position, the inner and outer layer regions are lifted causing the inner and outer layers to delaminate in a peripheral region (15) between the first and second cuts and an opening (19).

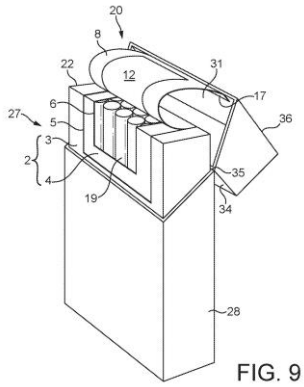

FIG. 9

21: 2019/07921. 22: 2019/11/28. 43: 2023/03/17
51: G06Q
71: nChain Holdings Limited
72: CHAN, Ying, KRAMER, Dean
33: GB 31: 1708488.0 32: 2017-05-26
33: GB 31: 1708493.0 32: 2017-05-26
33: GB 31: 1708491.4 32: 2017-05-26

54: SCRIPT-BASED BLOCKCHAIN INTERACTION

00: -

There may be provided a computer-implemented method. It may be implemented using a blockchain network such as, for example, the Bitcoin network. The computer-implemented method includes: i) receiving, at a node in a blockchain network, a first transaction associated with a digital asset, the first transaction including a first script that specifies a set of constraints on a second transaction to transfer control of the digital asset, the set of constraints including a constraint that a set of data obtained by

the node includes information obtained from a blockchain associated with the blockchain network; ii) obtaining the second transaction, the second transaction including a second script that, as a result of being executed, causes the node to obtain the set of data; and iii) validating the second transaction by executing the first script and the second script.

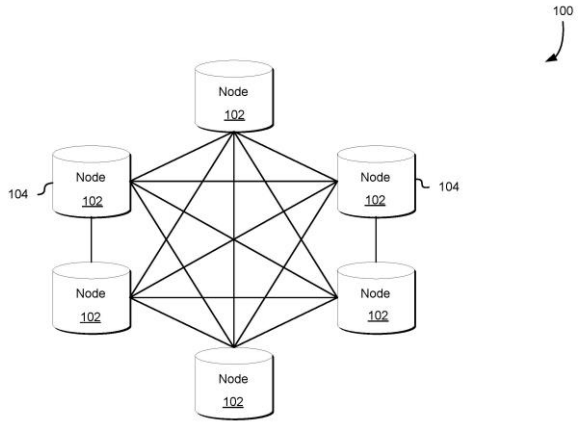

21: 2019/07926. 22: 2019/11/28. 43: 2023/03/13
51: B65D; E02D; G09F; H02G
71: Channell Commercial Corporation
72: LEMACKS, Michael A., SAFRANEK, Timothy S., WATSON, Christopher M., BURKE, Edward J.
33: US 31: 16/116,664 32: 2018-08-29
54: SINGLE SIDE FASTENING SYSTEM FOR IDENTIFICATION PLACARD FOR UTILITY VAULT LIDS
00: -
A fastener for attaching an identification placard having a post to a lid for a utility vault from a single side of the lid, the fastener includes a body portion for positioning within a hole in the lid, the fastener having tabs for retaining the fastener to the lid and lobes for preventing over insertion of the fastener into the hole in the lid and a bore extending through or partially through the body portion for receipt of and friction retention and/or mechanical interlocking of the post of the identification placard.

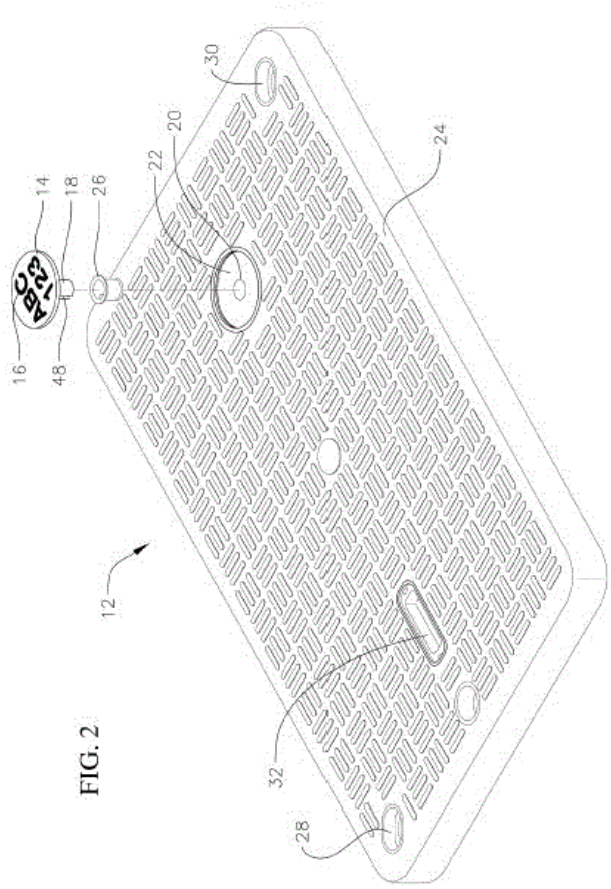

FIG. 2

21: 2019/08027. 22: 2019/12/03. 43: 2023/04/05
51: A61K
71: DIZLIN PHARMACEUTICALS AB
72: ERIKSSON, Elias, DIZDAR SEGRELL, Nil, EHRNEBO, Mats, BRING, Leif
33: SE 31: 1750707-0 32: 2017-06-05
54: LEVODOPA INFUSION SOLUTION
00: -
The invention provides an aqueous pharmaceutical solution for use in the treatment of diseases of the central nervous system (CNS), the solution comprising at least 5 mg/ml dissolved levodopa, and having a pH in the range of 3.0 to 8.5. Said solution is provided by mixing a) an aqueous stock solution comprising levodopa, said stock solution having a pH of less than 2.8 at 25 °C and b) an aqueous buffering solution, for increasing the pH of said stock solution, said buffering solution having a pH of at least 4.0 at 25 °C. The aqueous pharmaceutical solution is administered to a subject suffering from a disease of the central nervous system (CNS) shortly after mixing of the aqueous stock solution and the aqueous buffering solution. Furthermore, the

invention provides a kit for administration of aqueous pharmaceutical solutions to subjects suffering from diseases of the central nervous system (CNS).

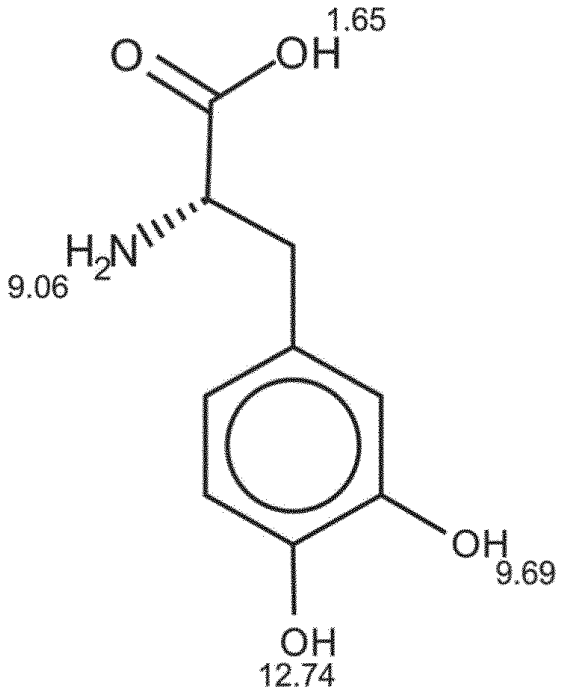

21: 2019/08144. 22: 2019/12/09. 43: 2023/04/05
51: B01L; C12Q; G01N; H01L; C40B
71: ILLUMINA, INC.
72: DEHLINGER, Dietrich, AGAH, Ali, FUNG, Tracy Helen, KOSTEM, Emrah
33: US 31: 62/614,934 32: 2018-01-08
33: US 31: 62/614,930 32: 2018-01-08
33: NL 31: 2020758 32: 2018-04-12
54: HIGH THROUGHPUT SEQUENCING WITH SEMICONDUCTOR-BASED DETECTION
00: -
A biosensor (300) for base calling is provided. The biosensor (300) comprises a sampling device, which includes a sample surface (334) that has an array of pixel areas (306', 308', 310', 312', 314') and a solid-state imager (322) that has an array of sensors (306, 308, 310, 312, 314). Each sensor (306, 308, 310, 312, 314) generates pixel signals in each base calling cycle. Each pixel signal represents light gathered in one base calling cycle from one or more clusters (306A, 306B; 308A, 308B; 310A, 310B; 312A, 312B; 314A, 314B) in a corresponding pixel area (306', 308', 310', 312', 314') of the sample surface (334). The biosensor (300) further comprises a signal processor configured for connection to the sampling device. The signal processor receives and processes the pixel signals from the sensors (306, 308, 310, 312, 314) for base calling in a base calling cycle, and uses the pixel signals from fewer sensors (306, 308, 310, 312, 314) than a number of clusters (306A, 306B; 308A, 308B; 310A, 310B; 312A, 312B; 314A, 314B) base called in the base calling cycle. Pixel signals from the fewer sensors (306, 308, 310, 312, 314) include at least one pixel signal representing light gathered from at least two clusters (306A, 306B; 308A, 308B; 310A, 310B; 312A, 312B; 314A, 314B) in the corresponding pixel area (306', 308', 310', 312', 314').

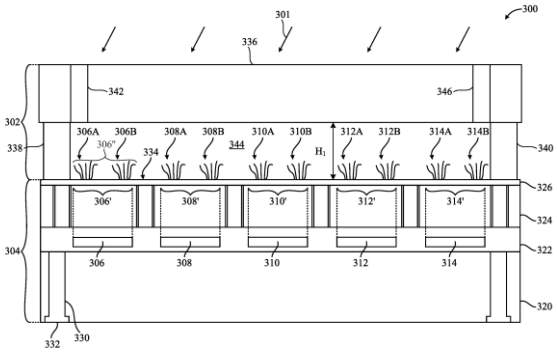

FIG. 3

21: 2019/08270. 22: 2019/12/11. 43: 2023/04/03
51: B65D; B29C; B31C; B32B
71: ENVICAN GMBH
72: DREGGER, Thomas, SCHÖNIG, Christoph
33: EP 31: PCT/EP2017/064158 32: 2017-06-09
54: PRESSURE-RESISTANT CONTAINER
00: -
The invention relates to a container containing a liquid and/or gaseous medium which has a negative pressure or develops a negative pressure during transportation or storage. The cylindrical container cover (101) is made primarily from a paper or cardboard-based material and is closed at the bottom by a base element and on the top by a cover. The container can withstand an internal pressure of at least 5 bar. The inner-most layer of the container cover (101) comprises a straight, wound barrier layer (102) which has a fold which folds with itself and which extends in the longitudinal direction of the container. The barrier layer (102) is a prefabricated laminate made from an inner diffusion-tight barrier

film or from an inner diffusion-tight barrier laminate (108) and an outer kraft paper layer (107).

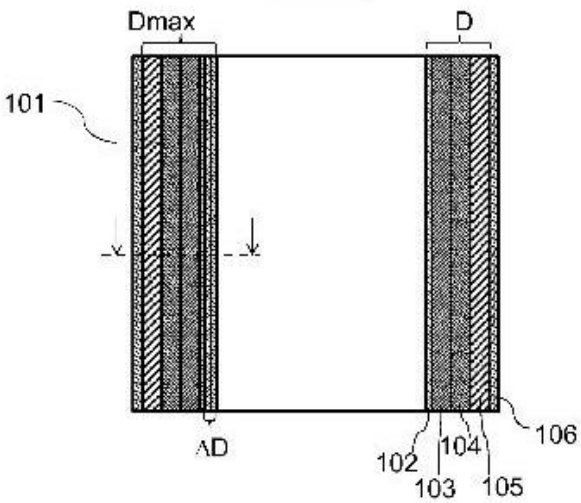

21: 2019/08615. 22: 2019/12/23. 43: 2023/04/05
51: A01M; A01N; B23B
71: BIOHERBICIDES AUSTRALIA PTY LTD
72: RIIKONEN, Peter, GOULTER, Ken
33: AU 31: 2017903063 32: 2017-08-02
54: METHOD AND APPARATUS FOR CAPSULAR DELIVERY TO PLANTS
00: -
A method of controlling the growth of a plant is provided, the method including the steps of: (a) inserting a capsule containing an agent into an opening formed in a plant; and (b) closing the opening formed in the plant into which the capsule is inserted. The agent may be a chemical agent. The plant may be a woody plant, such as a woody weed or a woody cultivated plant. Also provided is a capsule containing an agent for insertion into a plant, and an apparatus for insertion of a capsule into a plant.

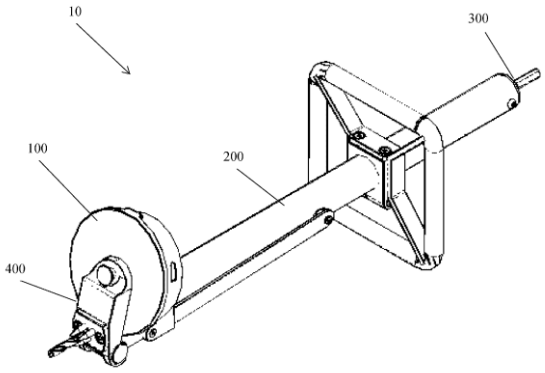

21: 2020/00261. 22: 2020/01/15. 43: 2023/03/07
51: B62D
71: KOMATSU GERMANY GMBH
72: SCHWARZ, Henry, JUNGHANS, Jens, RÖSCH, Matthias, SPELDRICH, Sebastian
33: DE 31: 10 2017 116 428.6 32: 2017-07-20
54: MOUNTING ARRANGEMENT FOR TENSIONING UNITS IN TRACKED UNDERCARRIAGES OF LARGE MACHINES
00: -
The invention relates to a mounting arrangement for a tensioning unit in the lateral member of crawler-chain truck assemblies of tracked undercarriages in large machines, wherein the tensioning unit (12b) is arranged in a lateral member compartment (12a) in the lateral member (12) of the crawler-chain truck assembly and a mounting opening (13) is arranged in the lateral member (12) on the outer side thereof in the installation region of the tensioning unit (12b), via which mounting opening the tensioning unit (12b) in the installation position can be removed from the lateral member compartment (12a) transversely with respect to the crawler-chain running direction

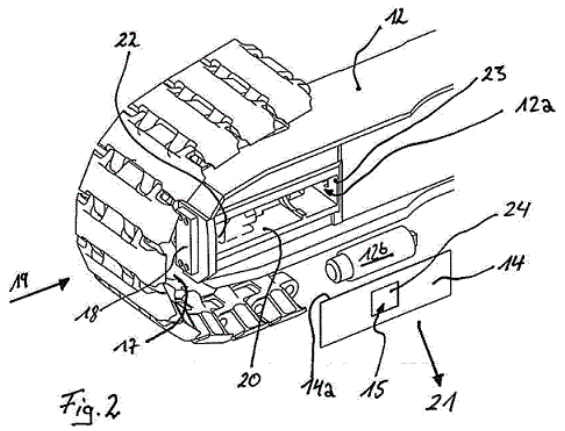

21: 2020/00543. 22: 2020/01/27. 43: 2023/03/13
51: F03B
71: MARINE POWER SYSTEMS LIMITED
72: STOCKMAN, Gareth Ian, CHAPMAN, John Christopher, FOSTER, Graham
33: GB 31: 1712855.4 32: 2017-08-10
54: DRIVE ASSEMBLY
00: -
A drive assembly is provided suitable for aiding in the conversion of wave energy to useful energy. The drive assembly of the present invention is arranged to transfer wave energy to an energy converter, the drive assembly comprising,an actuating member having an actuating length. The drive assembly further comprises a movable energy transfer member arranged to be coupled to an energy converter and arranged to transfer energy from the actuating member to said energy converter. The drive assembly further comprises an energy storing member comprising a biasing member coupled to one or more of: the actuating member, the energy transfer member; the energy storing member being arranged to cause the actuating member or the energy transfer member to move position. The actuating member is arranged to move the energy transfer member from a first stroke position to a second stroke position; and the first stroke position and the second stroke position define distal end points of a working stroke; the working stroke arranged so as to drive said energy converter.

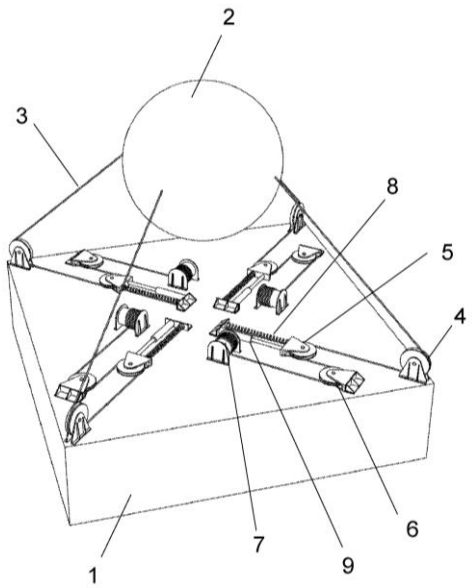

21: 2020/01751. 22: 2020/03/19. 43: 2023/04/20
51: B65G
71: Dale Holdings (Pty) Ltd
72: DALE, Chris
33: ZA 31: 2017/05763 32: 2017-08-24
54: MODULAR CONVEYOR BELT
00: -
The invention relates to a driving end module of a modular conveyor belt, the driving end module having an elongate body with an arrangement of interspaced fingers on opposed sides along the length of the body. Each interspaced finger includes a transverse aperture which defines a link path through the transverse apertures into which a rigid rod can be inserted through an installation aperture to link two adjacent conveyor belt rows to each other and provide a conveyor belt section. The driving head also includes a socket located between the installation aperture and the link path which is shaped to receive a plug to prevent the rigid rod from sliding through the installation aperture. The driving end module further includes a terminal driving head having a positive drive protrusion which in use engages a vertically extending ridge of a rotating drive tower.

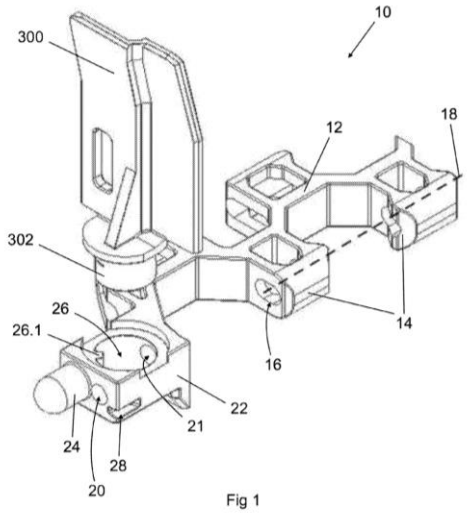

Fig 1

21: 2020/02004. 22: 2020/05/04. 43: 2023/03/15
51: B65G; E02F
71: FLSmidth A/S
72: VORAUER, Joachim, PLETZ, Rudolf, SMAJLOVIC, Belmin
33: US 31: 62/847,485 32: 2019-05-14
54: QUICK RELEASE BUCKETS FOR BUCKET WHEELS
00: -
A bucket wheel apparatus incorporates a bucket (1) connected to a crossbar(401) of a wheel (400), CHARACTERISED IN THAT hooks (2) surround the crossbar (401) such that the crossbar (401) is received in 5 crossbar openings (13) of the hooks (2). The bucket (1) may further have a retaining pin (12) for pre-tensioning the bucket (1) to secure the bucket (1) to the wheel (400). Pretensioning may be effected through the use of a slider key (403) which engages a receptacle (15) extending through the slider key (403). The advantages 10 provided with embodiments of the invention include safe and quick assembly and disassembly of the bucket (1) to/from the wheel (400).

FIG. 2

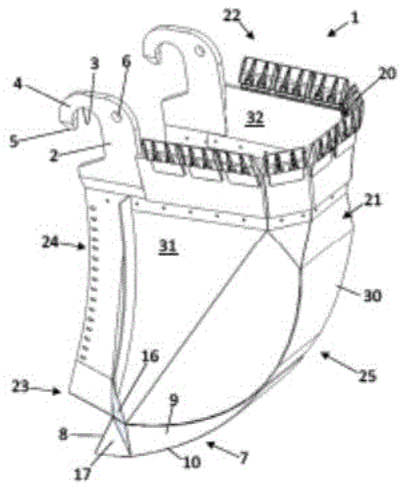

21: 2020/02059. 22: 2020/05/04. 43: 2023/04/05
51: G06F; H04N
71: FRAUNHOFER-GESELLSCHAFT ZUR FÖRDERUNG DER ANGEWANDTEN FORSCHUNG E.V.
72: MURTAZA, Adrian, FUCHS, Harald, CZELHAN, Bernd, PLOGSTIES, Jan
33: EP 31: 17196255.8 32: 2017-10-12
54: METHOD AND APPARATUS FOR EFFICIENT DELIVERY AND USAGE OF AUDIO MESSAGES FOR HIGH QUALITY OF EXPERIENCE
00: -
There are disclosed a method and a system for a virtual reality, VR, augmented reality, AR, mixed reality, MR, or 360-degree Video environment. The system may be configured to: receive at least one Video Stream (106) associated to an audio and video scene to be reproduced; and receive at least one first Audio Stream (116, 316) associated to the audio and video scene to be reproduced, wherein the system comprises: at least one media Video decoder (102) configured to decode at least one Video signal from the at least one Video Stream (106) for the representation of the audio and video scene to a user; and at least one media Audio decoder (112) configured to decode at least one Audio signal from the at least one first Audio Stream (116, 316) for the representation of the audio and video scene to the user; a region of interest, ROI, processor (120), configured to: decide, based at least on the user's current viewport and/or head orientation and/or movement data (122) and/or viewport metadata (131) and/or audio information

message metadata (141), whether an Audio information message associated to the at least one ROI is to be reproduced, wherein the audio information message is independent of the at least one Video signal and the at least one Audio signal; and cause, at the decision that the information message is to be reproduced, the reproduction of the Audio information message.

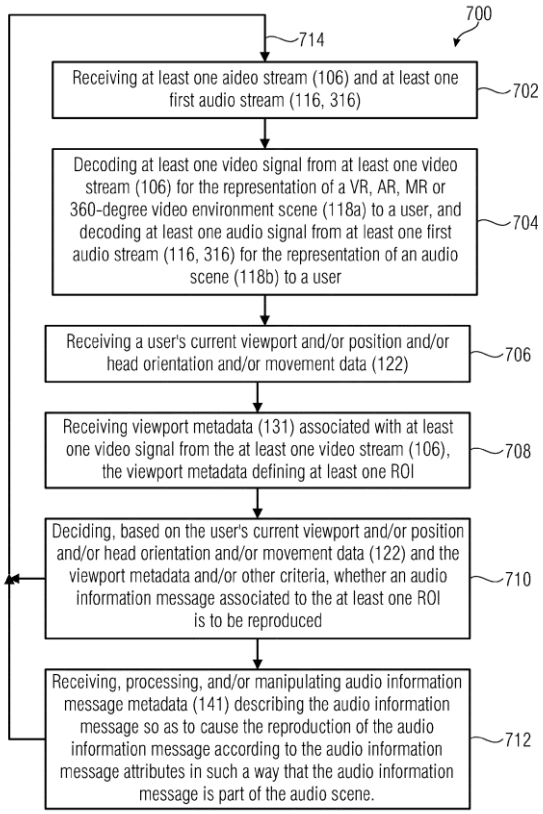

21: 2020/02113. 22: 2020/05/04. 43: 2023/04/05
51: C01F; H01M
71: AMBERCON TECHNOLOGY (UK) LIMITED
72: WITTER, Raiker, MOHAMMAD, Irshad, MOLAIYAN, Palanivel, KUMAR, Suresh
33: EE 31: P201700032 32: 2017-09-01

54: A METHOD FOR MANUFACTURING A NANOPARTICLE MATERIAL AND A FLUORIDE ION BATTERY

00: -

The present invention provides a method for manufacturing a nanopartic!e material having an ionic conductivity as a battery material for Fluoride ion Batteries, thus, being capable for overcoming high resistances at the surfaces, grain-boundaries of nanoparticles or compartments of the nanoparticles by a material treatment selected from: (i) a ball-mill procedure under aerosol and/or vapour-pressure atmosphere, (jj) excess-synthesis, (iii) ball-milling with surface stabilizing and conductivity enhancing solid or/and gel/liquid additives or (iv) functionalizing the material to obtain functionalized nanoparticles (GSNP) comprising a dispersion of graphene, nanotubes and/or a further additive selected from carbon-black, graphite, Si and/or CFX, Herein, fluorides (EmmFh), fluorides composites (Em1m1Em2m2...Fh1) are synthesised, wherein a first metal, metalloid or non-metal Em or Em1 and a second metal, metalloid or non-metal Em2 are dissimilarly selected from Cu, Pb, Fe, Sn, Zn, Bi, Cd, Co, Cr, Ni, Sb, C, Si, B. P, N, Ge, Ce, Se, Ca, Mg, Li, Na, K, Al, Sr, Ba, La, Sm, Eu, Cs, Gd or Y in a manner that a battery material having an increased ionic conductivity is obtained.

21: 2020/02203. 22: 2020/05/04. 43: 2023/03/09
51: A61K; A61P; C12N
71: EdiGene (GuangZhou) Inc.
72: YUAN, Pengfei, FANG, Riguo, YU, Lingling, XIA, Penghui, WANG, Jia, LIANG, Fucai
33: CN 31: 201711027708.6 32: 2017-10-27

54: METHOD FOR IMPROVING FETAL HEMOGLOBIN EXPRESSION

00: -

Provided is a method for genetically editing an enhancer site of hematopoietic stem cell BCL11A, comprising: disrupting the CTTCCT region of a BCL11A genome by means of gene editing techniques. The genetically edited hematopoietic stem cells have normal cell functions and may significantly increase the expression of fetal hemoglobin for the treatment of ß-thalassemia and sickle cell anemia.

21: 2020/02825. 22: 2020/05/15. 43: 2023/03/15
51: A61K; A61P; C07D
71: Merck Patent GmbH
72: KARRA, Srinivasa R., XIAO, YuFang, SHERER, Brian A., CHEKLER, Eugene
33: US 31: 62/573,255 32: 2017-10-17

54: PYRIMIDINE TBK/IKKE INHIBITOR COMPOUNDS AND USES THEREOF
00: -
The present invention relates to compounds of Formula I and pharmaceutically acceptable compositions thereof, useful as TBK/IKKε inhibitors.

21: 2020/03388. 22: 2020/06/05. 43: 2023/04/05
51: A23C; A23L
71: ODDLYGOOD GLOBAL OY
72: MYLLÄRINEN, Päivi, OIKARINEN, Kristiina, RAJAKARI, Kirsi
33: FI 31: 20176171 32: 2017-12-22
54: PLANT-BASED PRODUCT AND PROCESS
00: -
The present invention relates to a process for producing a plant-based food product, plant-based food products and uses related thereto. The process comprises providing a suspension comprising starch and optionally protein, heating said suspension to obtain a warm suspension, preparing a suspension comprising partly hydrolyzed starch by treating said warm suspension with at least one starch degrading enzyme, subjecting the suspension comprising partly hydrolyzed starch to heat treatment to obtain a heat-treated suspension comprising partly hydrolyzed starch, cooling the heat-treated suspension, and optionally fermenting and/or acidifying the suspension comprising partly hydrolyzed starch, and optionally further cooling and/or adding jam, beta-glucan, flavoring and/or additives to said suspension, and obtaining a plant-based food product.

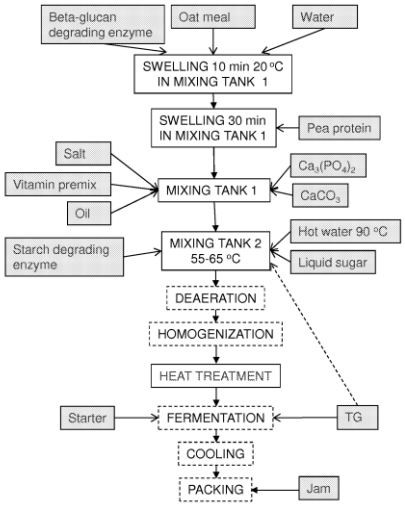

21: 2020/04145. 22: 2020/07/07. 43: 2023/03/24
51: A61K; A61Q; G01N
71: Johnson & Johnson Consumer Inc.
72: GIANO, Michael C., QUEIROZ, Daniel, KNOX, Susan
33: US 31: 15/835,939 32: 2017-12-08
54: HIGH-THROUGHPUT METHOD FOR DETECTING TOOTH STAIN PREVENTION AND REMOVAL
00: -
Provided are methods of detecting tooth stain prevention and/or removal comprising the steps of providing pellicle-coated hydroxyapatite particles, contacting the particles with a first solution and then a second solution, wherein the first solution is either a test solution or a stain solution and the second solution is the other of said test solution or stain solution, separating from the resulting particles a liquid comprising stain introduced in the contacting step b), and measuring the UV-Vis absorbance of the separated liquid to determine the amount of stain in the liquid.

21: 2020/04317. 22: 2020/07/14. 43: 2023/03/15
51: A61K; C07H
71: Bayer Animal Health GmbH
72: ILG, Thomas
33: EP(DE) 31: 17207740.6 32: 2017-12-15
33: EP(DE) 31: 17207746.3 32: 2017-12-15
33: EP(DE) 31: 17207750.5 32: 2017-12-15
54: IMMUNOSTIMULATORY COMPOSITIONS
00: -
The present disclosure relates to immunostimulatory compositions that are effective in eliciting immune responses in avian species. More specifically, these immunostimulatory compositions comprise an immunomodulator composition and an immunostimulatory oligonucleotide that when administered stimulate toll-like receptor 21.

21: 2020/04823. 22: 2020/08/04. 43: 2023/03/24
51: G01N; G16H
71: Johnson & Johnson Consumer Inc.
72: BENSACI, Jalil, ODDOS, Thierry, STAMATAS, Georgios N.
33: US 31: 62/613,878 32: 2018-01-05
54: MILD SURFACTANT PREPARATION AND METHOD THEREFOR
00: -
A method of selecting a surfactant system suitable for infants and young children is disclosed.

21: 2020/05138. 22: 2020/08/19. 43: 2023/04/05
51: E04G
71: PERI SE
72: STECK, Tobias, GAISER, André
33: DE 31: 20 2018 101 602.4 32: 2018-03-22
54: SUPPORTING FRAMEWORK
00: -
The invention relates to a supporting framework having at least one suspension device for a diagonal cross brace that reinforces the supporting framework, wherein the suspension device has receiving fingers for openings provided on the ends of the diagonal cross brace, characterized in that two first receiving fingers of the suspension device each have a bent end portion, and second receiving fingers situated opposite from the first receiving fingers have a pivotable end portion.

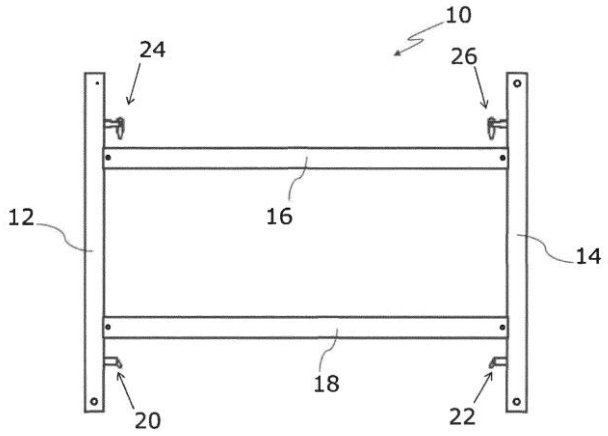

21: 2020/05517. 22: 2020/09/04. 43: 2023/03/15
51: A24F
71: McNeil AB
72: TASSELLI, Corrado, LU, Cheng-Hsien, HSU, Chun-Hao
33: SE 31: 1850134-6 32: 2018-02-06
54: CARTRIDGE FOR ELECTRONIC DELIVERY SYSTEM
00: -
A cartridge assembly (2) may be utilized in combination with an electronic nicotine delivery system (4) for the safe, efficient and cost- effective means for delivering a controlled dose of nicotine to a user on demand. The cartridge assembly includes a reservoir (8) with a material for holding liquid nicotine or a liquid nicotine solution and is constructed from a material that is chemically resistant to nicotine or nicotine solution. The cartridge assembly (2) includes an anti- counterfeit feature to prevent use of an unauthorized cartridge in the electronic nicotine delivery system. The cartridge assembly also includes an anti-reuse feature that precludes reuse of the cartridge assembly once removed from the electronic nicotine delivery system. Essentially, the cartridge assembly is designed for a single use only.

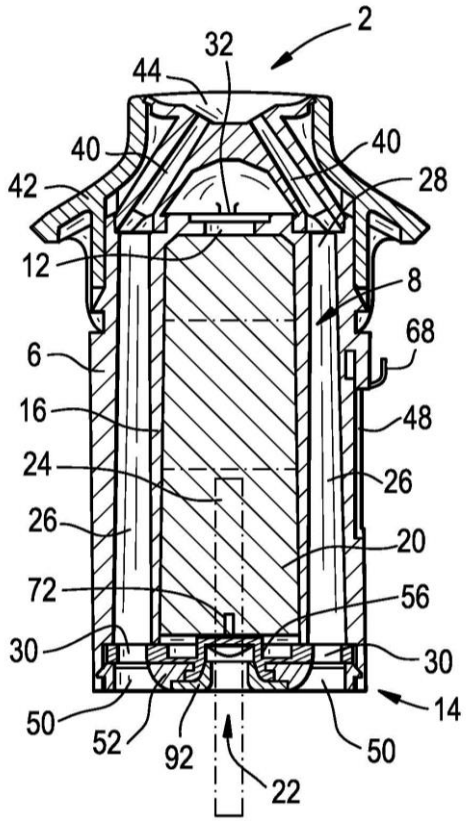

21: 2020/05661. 22: 2020/09/11. 43: 2023/04/05
51: A61K; A61P
71: MEI PHARMA, INC.
72: GOLD, Daniel P.
33: US 31: 62/646,314 32: 2018-03-21
54: COMBINATION THERAPY
00: -
Provided herein are methods of treating diseases, such as cancer, using a combination therapy. In certain embodiments, the methods comprise administering an effective amount of a phosphoinositide-3-kinase (PI3K) inhibitor and an effective amount of a Bruton tyrosine kinase (BTK) inhibitor to a patient.

21: 2020/06573. 22: 2020/10/22. 43: 2023/04/05

51: A61K
71: CHIBI, INC.
72: WONG, Vernon G., HUANG, Glenn T.
33: US 31: 62/665,367 32: 2018-05-01
54: LIQUID DEPOT FOR NON-INVASIVE SUSTAINED DELIVERY OF AGENTS TO THE EYE
00: -
The present embodiments provide compositions, methods, and kits for the treatment or prevention of ocular conditions or maladies via non-invasive liquid depots. In at least one embodiment, the liquid depot is capable of sustained-release delivery of at least one pharmaceutical agent to the eye for days or weeks.

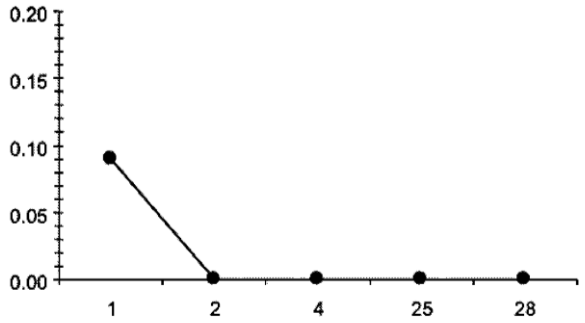

21: 2020/06581. 22: 2020/10/22. 43: 2023/04/05
51: A61K; C07D; A61P
71: CHINA PHARMACEUTICAL UNIVERSITY
72: YOU, Qidong, GUO, Xiaoke, LI, Dongdong, CHEN, Weilin, WANG, Zhihui
33: CN 31: 201810365880.0 32: 2018-04-23
54: PHENYL TRIAZOLE MLL1-WDR5 PROTEIN-PROTEIN INTERACTION INHIBITOR
00: -
The invention relates to the field of medicinal chemistry, in particular to a phenyl triazole MLL1-WDR5 protein-protein interaction inhibitor (I) and a preparation method thereof, and pharmacodynamics experiments prove that the compound of the invention has relatively strong MLL1-WDR5 protein-protein interaction inhibition activity.

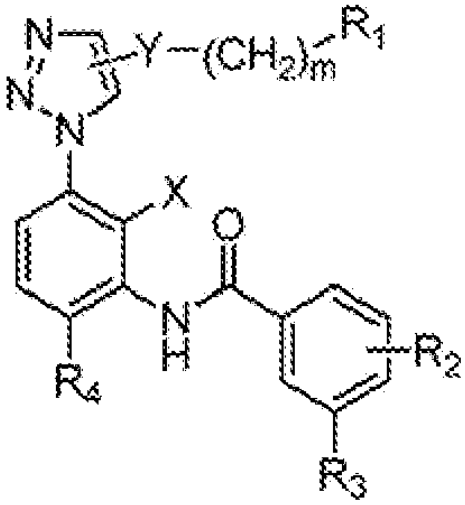

(I)

21: 2020/06876. 22: 2020/11/04. 43: 2023/04/05
51: A01G
71: INTELLIGENT GROWTH SOLUTIONS LIMITED
72: AYKROYD, Henry, SCOTT, David, SKINNER, Niall Alexander
33: GB 31: 1808664.5 32: 2018-05-25
54: VENTILATION AND LIGHTING DEVICE
00: -
An apparatus for use in indoor agriculture is provided, the apparatus comprising a plurality of elongate supports (6) connected to at least one common manifold (8a, 8b). Each elongate support (6) within the plurality of elongate supports (6) comprising: a main body (12) having a first side; at least one inlet (16) in fluid communication with the at least one common manifold (8a, 8b); a plurality of outlets (14); and a channel within and extending along substantially the length of the main body (12) between the at least one inlet (16) and the plurality of outlets (14). The at least one common manifold (8a, 8b) is configured to allow gas to flow into the at least one inlet (16) of the plurality of elongate supports (6), wherein the apparatus is configured such that during use, gas may flow from the common manifold (8a, 8b) to the at least one inlet (16) of each elongate support (6) within the plurality of elongate supports (6), through the channel of each elongate support (6) and out of the plurality of outlets (14) of each elongate support (6), such that a uniform flow of gas is provided adjacent the first side of the main body (12) during use.

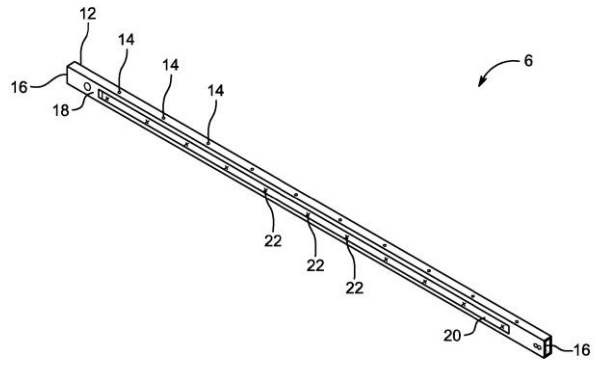

21: 2020/07022. 22: 2020/11/11. 43: 2023/04/05
51: A61K; C07K; A61P
71: WORG PHARMACEUTICALS (HANGZHOU) CO., LTD.
72: VALENTA, Rudolf, CURIN, Mirela, CHEN, Kuan-Wei, VRTALA, Susanne
33: EP 31: 18173258.7 32: 2018-05-18
54: TREATMENT AND PREVENTION OF HOUSE DUST MITE ALLERGIES
00: -
The present invention relates to a fusion protein having formula (I): X1–Y–X2, wherein X1 and X2 comprise each four to six allergen fragments or variants thereof fused to each other, wherein said allergen fragments are derived from at least two allergens of the genus Dermatophagoides, and wherein Y is a carrier protein.

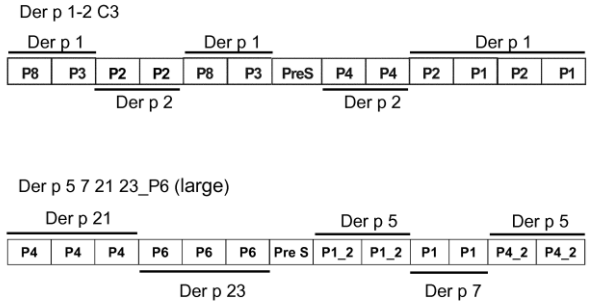

21: 2020/07026. 22: 2020/11/11. 43: 2023/04/05
51: B32B; C08L
71: MELODEA LTD.
72: AZERRAF, Clarite, NEVO, Yuval, LEIBLER, David Michael, BEN SHALOM, Tal, KULBAK, Einav, NEVO, Yaniv
33: US 31: 62/678,381 32: 2018-05-31
54: MULTILAYERED ARTICLES
00: -
The invention provides highly stable and versatile multilayered structure or articles, based on cellulose nanomaterials, tailored and processed for a variety of applications, as superior materials in the food packaging industry.

21: 2020/07030. 22: 2020/11/11. 43: 2023/03/15
51: A01N; A61K; C07C; C07D
71: Bayer Aktiengesellschaft
72: ARLT, Alexander, HALLENBACH, Werner, SCHWARZ, Hans-Georg, FÜßLEIN, Martin, WROBLOWSKY, Heinz-Juergen, LINKA, Marc, EILMUS, Sascha, ILG, Kerstin, GÖRGENS, Ulrich, DAMIJONAITIS, Arunas Jonas, CANCHO GRANDE, Yolanda, EBBINGHAUS-KINTSCHER, Ulrich, JESCHKE, Peter, HA, Weijie, HEISLER, Iring, TURBERG, Andreas
33: EP(DE) 31: 18167084.5 32: 2018-04-12
54: N-(CYCLOPROPYLMETHYL)-5-(METHYLSULFONYL)-N-{1-[1-(PYRIMIDIN-2-YL)-1H-1,2,4-TRIAZOL-5-YL]ETHYL}BENZAMIDE DERIVATIVES AND THE CORRESPONDING PYRIDINE-CARBOXAMIDE DERIVATIVES AS PESTICIDES
00: -
The present invention relates to N-(cyclopropylmethyl)-5-(methylsulfonyl)-N-{1-[1-(pyrimidin-2-yl)-1H-1,2,4-triazol-5-yl]ethyl}benzamide derivatives and the corresponding pyridine-carboxamide derivatives as well as related compounds of the general formula (I), to formulations and compositions comprising such compounds and to their use in the control of animal pests including arthropods and insects in plant protection and to such compounds for use in controlling ectoparasites on animals. (I)

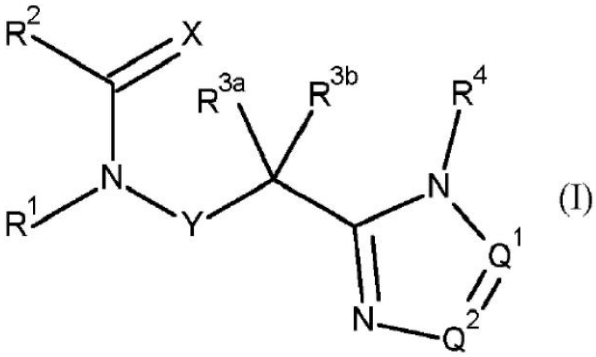

21: 2020/07050. 22: 2020/11/12. 43: 2023/04/05
51: A47G; B32B; E04F
71: GOLCONDA HOLDINGS, LLC
72: LAUTZENHISER, Lloyd L., LEBLANC, Shane S., LEBLANC, Melinda, HUANG, Li

33: US 31: 62/522,513 32: 2017-06-20
33: US 31: 62/650,228 32: 2018-03-29
54: MODULAR MAGNETICALLY RECEPTIVE WOOD AND ENGINEERED WOOD SURFACE UNITS AND MAGNETIC BOX SYSTEM FOR COVERING FLOORS, WALLS, AND OTHER SURFACES
00: -
The present invention provides a system, method, and apparatus for installing modular wood, engineered hardwood, and hardwood surface covering units on walls, floors, and other surfaces. The modular surface covering units have multiple layers. The layers are an outer layer, a wood, engineered hardwood, or hardwood layer, and a magnetic layer. Other layers or combinations of layers may also be used.

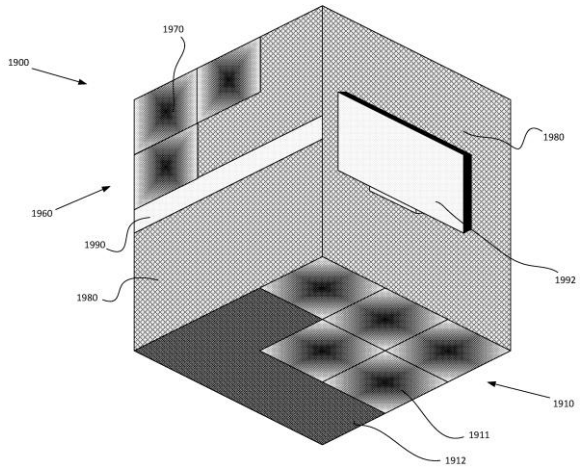

21: 2020/07101. 22: 2020/11/13. 43: 2023/04/05
51: C07D
71: KANCERA AB
72: VÅGBERG, Jan, BYSTRÖM, Styrbjörn
33: GB 31: 1807898.0 32: 2018-05-15
54: A PROCESS FOR THE STEREOSELECTIVE PREPARATION OF CHIRAL 2-[(HETERO)ARYLALKYLSULFANYL]PYRIMIDINES AND PRODUCTS OBTAINABLE THEREFROM
00: -
There is provided a process for the preparation of a compound of formula I, wherein R1 and R2 each have the meanings provided in the description. There is also provided a process for the preparation of pharmaceutically-active compounds comprising the process for the preparation of compounds of formula (I).

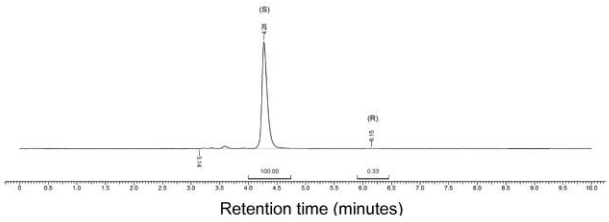

Figure 1

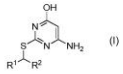

(I)

21: 2020/07343. 22: 2020/11/25. 43: 2023/04/05
51: C07D
71: CRINETICS PHARMACEUTICALS, INC.
72: HAN, Sangdon, ZHU, Yunfei, KIM, Sun Hee, ZHAO, Jian, WANG, Shimiao
33: US 31: 62/681,011 32: 2018-06-05
33: US 31: 62/734,873 32: 2018-09-21
54: MELANOCORTIN SUBTYPE-2 RECEPTOR (MC2R) ANTAGONISTS AND USES THEREOF
00: -
Described herein are compounds that are melanocortin subtype-2 receptor (MC2R) modulators, methods of making such compounds, pharmaceutical compositions and medicaments comprising such compounds, and methods of using such compounds in the treatment of conditions, diseases, or disorders that would benefit from modulation of MC2R activity.

21: 2020/07402. 22: 2020/11/27. 43: 2023/05/17
51: A47F
71: MORRIS, Michael Paterson
72: MORRIS, Michael Paterson
33: ZA 31: 2019/03564 32: 2019-09-01
54: DISPLAY APPARATUS
00: -
A display apparatus comprising a first member and a second member, at least two supports extending between the first member and the second member, a flexible light-transmissive, sheet material which encloses a volume, and at least one light source inside the volume.

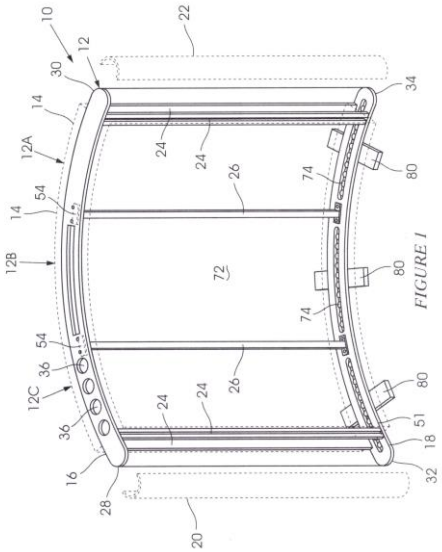

21: 2020/07649. 22: 2020/12/08. 43: 2023/04/05
51: A01K; C07K; C12N; A61P
71: KBIO HOLDINGS LIMITED
72: BURDEN, Leigh, HUME, Steven D., MORTON, Joshua, POGUE, Greg, BRATCHER, Barry, HAYDON, Hugh A., SIMPSON, Carrie A., PARTAIN, Nick, SHEPHERD, John W., SWOPE, Kelsi
33: US 31: 62/683,865 32: 2018-06-12
54: VIRUS AND ANTIGEN PURIFICATION AND CONJUGATION
00: -
Disclosed herein are methods and exemplary compositions associated with virus purification, antigen purification, and conjugation of virus and proteins (e.g., antigen) to form vaccines for delivery of immunological and other therapeutic agents, exemplary aspects of which may include harvesting viral and antigenic substances from source organisms; a purification platform comprising chemical separation and size-difference separation for the removal of contaminants, debris and impurities from the viral and protein (e.g. antigenic, including influenza hemagglutinin antigens) substances, as well as their concentration and collection; and a conjugation platform providing activation of the virus at a pH that increases binding rate and binding propensity between the virus and the protein, wherein embodiments related to the conjugation platform include controlling the ratio of virus to protein.

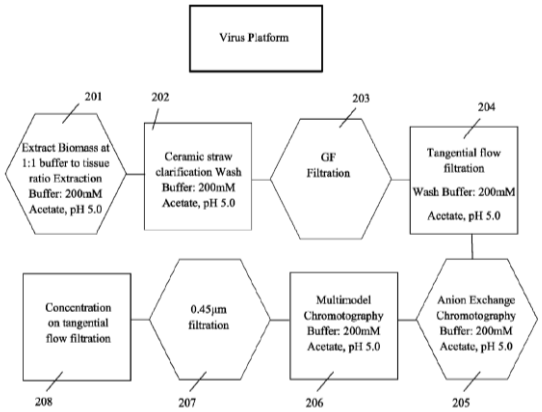

21: 2021/00073. 22: 2021/01/04. 43: 2023/04/11
51: A01G
71: GUANGXI FORESTRY RESEARCH INSTITUTE
72: YAO, Ruiling, WANG, Yin
33: CN 31: 202010426414.6 32: 2020-05-19
54: A METHOD FOR IMPROVING ROOTING STABILITY OF A SUBCULTURE BUD OF HIGH-RESIN-PRODUCTION P. MASSONIANA PLUS TREE
00: -
The invention relates to a method for improving rooting stability of a subculture bud of high-resin-production P. massoniana plus tree, and belongs to the technical field of plant propagation. The high-resin-production P. massoniana plus tree is adoped as research objects by the method of the present invention, based on the situation of aseptic rooting in vitro, the rooting medium, the culture method and culture conditions are systematically adjusted and optimized, which finished the process sequentially from selection, propagation to utilization; the method uses 1,1-Dimethy.Lpiperidylium chloride, paclobutrazol and active gibberellin to carry out biosynthesis regulation of terpene components in different rooting stages, thus the rooting ability of the high-resin-production P. massoniana is improved; and, the mode of action of the key diterpene substances during the root growth of P. massoniana is exploited for the first time: sodium selenite is used in combination with reduced glutathione and trehalose as free radical scavengers and membrane stabilizers, as a result, the rooting stability of high-resin-production P. massoniana is significantly increased.

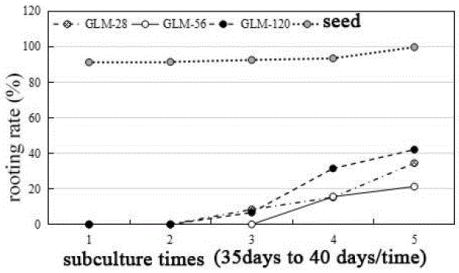

21: 2021/00075. 22: 2021/01/04. 43: 2023/04/11
51: A61K
71: OBI PHARMA, INC.
72: TSAI, Yi-chien, CHANG, Jo-fan, LAI, Jiann-shiun, YU, Cheng-der, Tony
33: US 31: 62/679,510 32: 2018-06-01
54: COMBINATION THERAPY BY USING ANTI-GLOBO H OR ANTI-SSEA-4 ANTIBODY WITH ANTI-NEGATIVE IMMUNE CHECK POINTS ANTIBODY
00: -
The present disclosure relates to treatment of cancer patients with anti-Globo series antigens (Globo H and S SEA-4) antibodies in combination with anti - negative immune check point antibody to rescue the inhibited T cell activity.

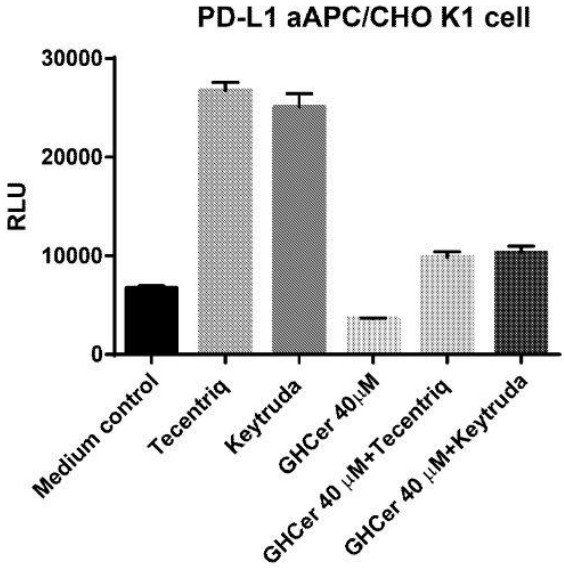

21: 2021/00261. 22: 2021/01/14. 43: 2023/03/30
51: A61M; G06F; G16H
71: ICU MEDICAL, INC.
72: XAVIER, Ben, KRABBE, Dennis, ENGER, Larry, DEOSTHALE, Chaitanya, ISENSEE, Anthony
33: US 31: 62/699,454 32: 2018-07-17
54: UPDATING INFUSION PUMP DRUG LIBRARIES AND OPERATIONAL SOFTWARE IN A NETWORKED ENVIRONMENT
00: -
A distributed system provides update data to a plurality of infusion pumps within a clinical environment. A connectivity adapter receives drug library updates or operational software updates for infusion pumps over a network that is outside of the clinical environment. The connectivity adapter caches the blocks of update data and staggers streaming blocks of updated data to the infusion pumps over a network within the clinical environment.

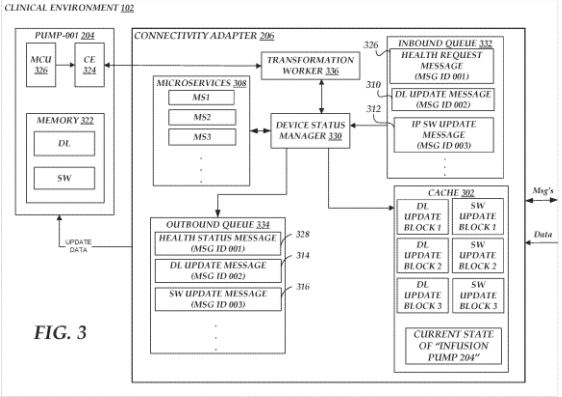

FIG. 3

21: 2021/00456. 22: 2021/01/22. 43: 2023/05/17
51: E04H
71: COCHRANE GULF FZE
72: BUCARIZZA, Vlado
54: SHAPED FENCE
00: -
A fence panel which includes a body comprising a single integrally formed sheet of mesh material with opposed first and second parallel edges which in use extend vertically, a lower edge which in use is ground engaging and an upper edge which opposes the lower edge, and wherein the upper edge forms an included angle relative to the first edge which is less than 90°.

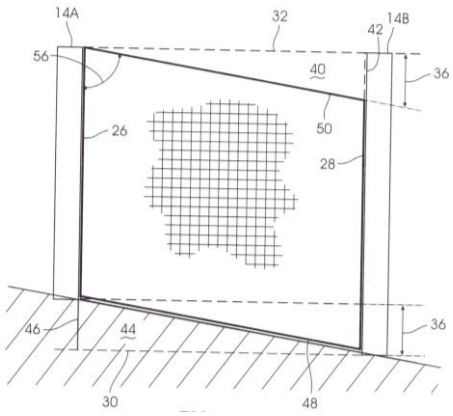

21: 2021/01273. 22: 2021/02/25. 43: 2023/04/24
51: C07D; A61P
71: Novartis AG
72: KEANEY, Gregg, F., VOLKMANN, Robert, A., ANDERSON, David, R., MALEKIANI, Sam, PISER, Timothy, LEISER, Steven, C.
33: US 31: 62/714,100 32: 2018-08-03

54: HETEROAROMATIC NMDA RECEPTOR MODULATORS AND USES THEREOF

00: -

Provided is 5-(3-chloro-4-fluorophenyl)-7-cyclopropyl-3-(2-(3-fluoro-3-methylazetidin-1-yl)-2-oxoethyl)-3,7-dihydro-4H-pyrrolo[2,3-d]pyrimidin-4-one and pharmaceutically acceptable salts thereof, and their uses in the treatment of psychiatric, neurological, and neurodevelopmental disorders, as well as diseases of the nervous system.

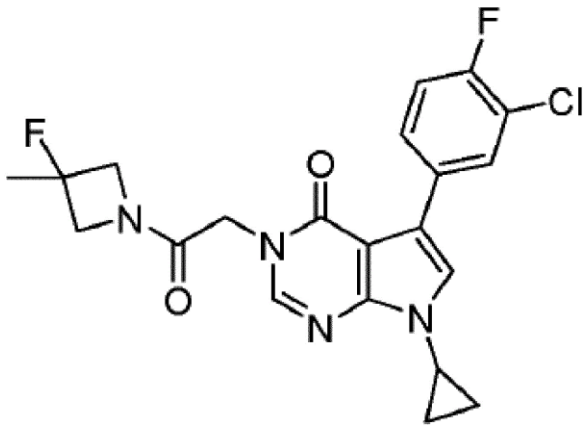

21: 2021/01720. 22: 2021/03/15. 43: 2023/04/11
51: G06F
71: ILLUMINA, INC.
72: GARCIA, Francisco Jose, RACZY, Come, DAY, Aaron, CARNEY, Michael J.
33: US 31: 62/405,824 32: 2016-10-07

54: SYSTEM AND METHOD FOR SECONDARY ANALYSIS OF NUCLEOTIDE SEQUENCING DATA

00: -

Disclosed herein are systems and methods for performing secondary analyses of nucleotide sequencing data in a time-efficient manner. Some embodiments include performing a secondary analysis iteratively while sequence reads are generated by a sequencing system. Secondary analyses can encompass both alignment of sequence reads to a reference sequence (e.g., the human reference genome sequence) and utilization of this alignment to detect differences between a sample and the reference. Secondary analysis can enable detection of genetic differences, variant detection and genotyping, identification of single nucleotide polymorphisms (SNPs), small insertions and deletion (indels) and structural changes in the DNA, such as copy number variants (CNVs) and chromosomal rearrangements.

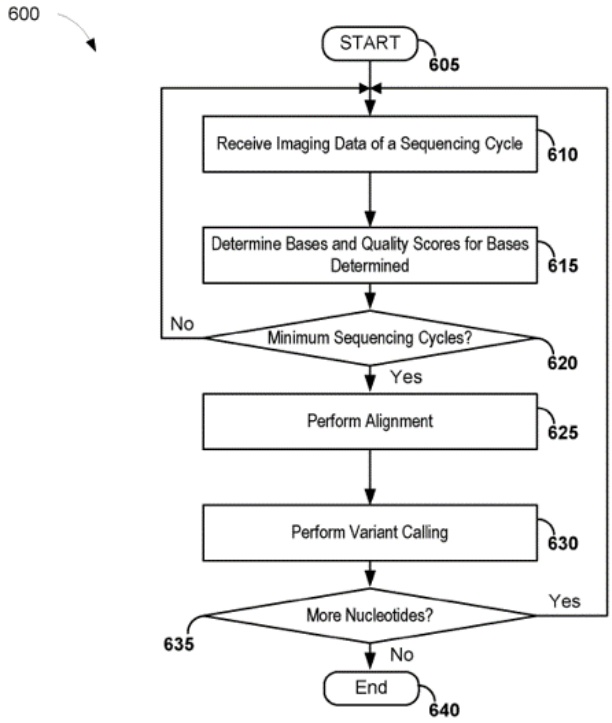

21: 2021/01862. 22: 2021/03/18. 43: 2023/04/13
51: G06F
71: Zensar Technologies Limited
72: Agepati Jahnavi, Sunny Dilip Chaurasia
33: IN 31: 202021011848 32: 2020-03-19

54: A NATURAL LANGUAGE PROCESSING (NLP) BASED SYSTEM AND METHOD FOR MIXED LANGUAGE GENERATION

00: -

A NATURAL LANGUAGE PROCESSING (NLP) BASED SYSTEM AND METHOD FOR MIXED LANGUAGE GENERATION An NLP-based system (101) and method (300) implemented thereby for generating multilingual language is disclosed. Initially, the system (101) receives a user preference of a first language and a second language. The system (101) generates a monolingual text in the first language and calculates a first tf-idf score of each word in the text for ranking various words. Further, the system (101) performs linear transformation of low ranked words to form second language words and align the vectors of the first language to vectors of the second language. Further, the system (101) identifies semantically similar words surrounding the linearly transformed second language words. Furthermore, the system (101) calculates a second tf-idf score for second language words and ranks them. The system (101) lastly generates an appropriate multilingual language response for the user by substituting the monolingual text in the first language with the top ranked words of the second language.

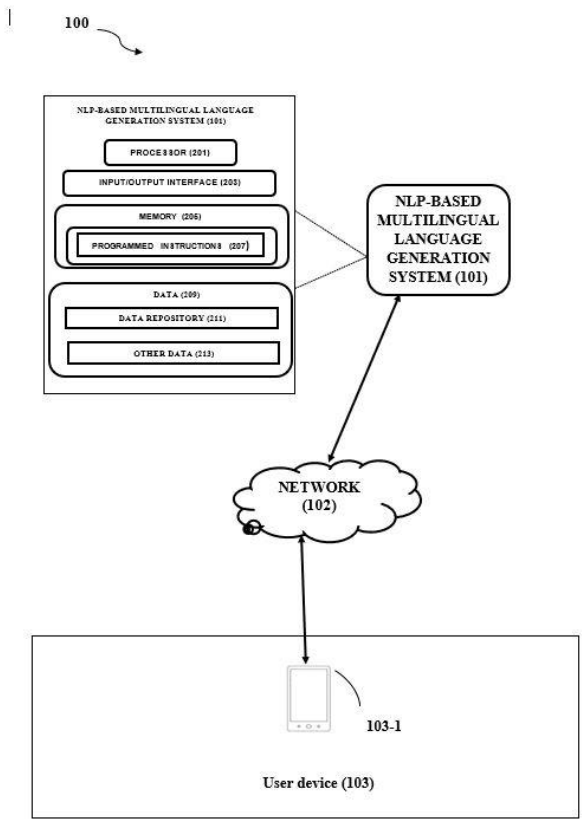

21: 2021/02015. 22: 2021/03/25. 43: 2023/04/11
51: A61K
71: MIRATI THERAPEUTICS, INC.
72: ENGSTROM, Lars Daniel, ARANDA, Ruth Wei, OLSON, Peter, CHRISTENSEN, James Gail, HALLIN, Jill
33: US 31: 62/729,189 32: 2018-09-10

54: COMBINATION THERAPIES

00: -

The present invention relates to combination therapies for treating KRas G12C cancers. In particular, the present invention relates to methods of treating cancer in a subject in need thereof, comprising administering to the subject a therapeutically effective amount of a combination of a pan ErbB family inhibitor and a KRAS G12C inhibitor of Formula (I), Formula (I-A) or Formula (I-B), pharmaceutical compositions comprising a therapeutically effective amounts of the inhibitors, kits comprising the compositions and methods of use therefor.

21: 2021/02136. 22: 2021/03/30. 43: 2023/04/14
51: G06F; G06K
71: Zensar Technologies Limited

72: Vidhi Sandeep Rai
33: IN 31: 202021034784 32: 2020-08-13
54: AN AUGMENTED REALITY SYSTEM AND METHOD FOR REAL-TIME MONITORING OF USER ACTIVITIES THROUGH EGOCENTRIC VISION
00: -
Disclosed is an augmented reality based system (101), augmented reality based 5 method (500) for monitoring user activities in a real-time. The system comprises an eyewear (111) comprising an egocentric image capturing means (205). A processor (104) and memory are in communication with the egocentric image capturing means (205). The system captures activities of a user via the egocentric image capturing means (205) to generate activity profile of the user. Further processes the activity profile of the 10 user using trained neural network in order to derive a useful activity recognition profile comprising a set of targeted activities to be monitored for the user. The system analyses each set of targeted activities based upon predefined factors to categorize each of the set of targeted activities into a category of a predefined categories. The system derives insights to the user based upon the analysis of the targeted activities by artificial 15 intelligence engine (303).

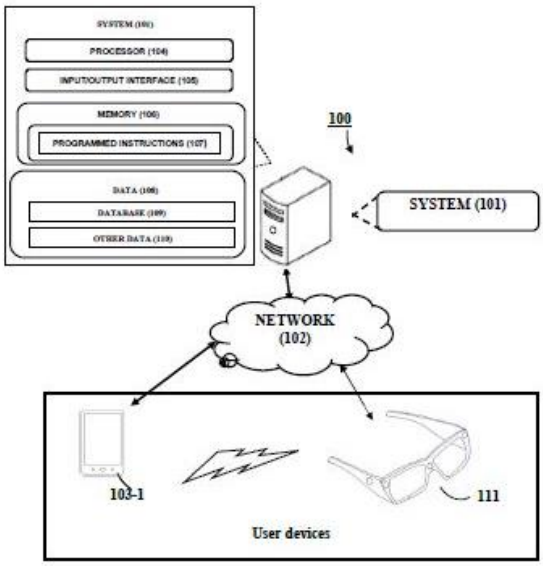

21: 2021/02285. 22: 2021/04/06. 43: 2023/03/22
51: B62D
71: CATERPILLAR INC.
72: SEBRIGHT, JASON L, JOHANNSEN, ERIC J
33: US 31: 15/488,710 32: 2017-04-17
54: TRACK LINK WITH ANGLED SEAL COUNTERBORE
00: -
This invention concerns a track link subassembly. The subassembly has a track link, which comprises a body defining a top surface, a bottom surface, a first side surface and a second side surface defining a thickness therebetween, a proximate end and a distal end. The body also defines a first bore adjacent the distal end defining a first longitudinal axis and a second bore adjacent the proximate end defining a second longitudinal axis. Either the first bore or the second bore is a blind bore, forming a counterbore configured to house a seal assembly. The counterbore defines a sidewall that forms an angle with the longitudinal axis of the bore that ranges from three to seven degrees.

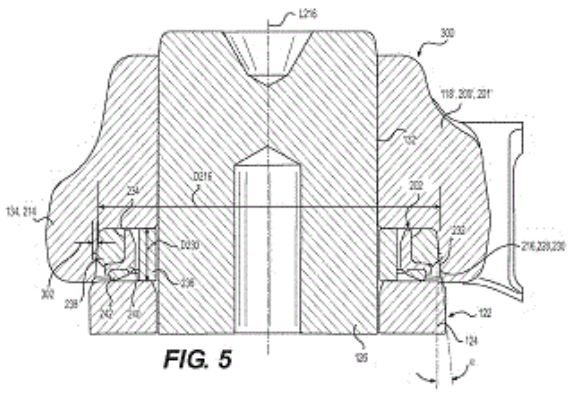
FIG. 5

21: 2021/02870. 22: 2021/04/29. 43: 2023/03/10
51: A61K; C07K; C12N
71: ABL BIO INC., I-MAB BIOPHARMA CO., LTD.
72: PARK, Eunyoung, LEE, Yangsoon, CHUNG, Hyejin, SUNG, Eunsil, YOO, Jiseon, PARK, Minji, SON, Yong-Gyu, CHOI, Hyoju, KIM, Eunjung, JUNG, Jaeho, YOU, Weon-Kyoo, LEE, Sang Hoon, FANG, Lei, JIANG, Wenqing
33: US 31: 62/773,239 32: 2018-11-30
54: ANTI-PD-L1/ANTI-4-1BB BISPECIFIC ANTIBODIES AND USES THEREOF
00: -
An anti-PD-L1/anti-4-1 BB bispecific antibody capable to effectively block the interactions between PD-L1 and its receptor PD-1 and between 4-1 BB and its ligand is provided. The bispecific antibody may have high binding affinity to both of a PD-L1 protein and a 4-1 BB protein.

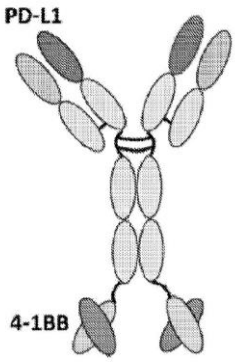

21: 2021/03152. 22: 2021/05/10. 43: 2023/05/15
51: C12Q
71: MASSEY UNIVERSITY
72: LOCKHART, Peter, WINKWORTH, Richard, MCLENACHAN, Patricia, GRÜNHEIT, Nicole, YANG FONG
33: AU 31: 2018904268 32: 2018-11-09
54: RAPID IDENTIFICATION OF BACTERIAL PATHOGENS
00: -
Disclosed herein are methods and compositions for specific detection of Mycobacterium spp. in a sample and for profiling multiple gene loci within Mycobacterium spp. that are linked to or that are directly involved in antibiotic resistance. In particular the method employs a unique set of nucleic acid amplification primers that enable the whole genome sequence-based approach disclosed herein, allowing for the full characterization of the antibiotic resistance profile of Mycobacterium spp.

21: 2021/03239. 22: 2021/05/13. 43: 2023/04/03
51: C21D; C22C
71: NANJING IRON & STEEL CO., LTD.
72: JIANG, Zaiwei, WANG, Sheng, HOU, Zhonghua, YAN, Qiangjun, ZHANG, Yijie, JIANG, Hui, WANG, Sicong
33: CN 31: 201811342361.9 32: 2018-11-12
54: THICK NM500 WEAR-RESISTANT STEEL AND PRODUCTION METHOD THEREFOR
00: -
A thick NM500 wear-resistant steel, relating to the field of metallurgical technology and comprising the following chemical components by mass percentage: 0.26%-0.30% of C, 0.20%-0.60% of Si, 0.60%-1.00% of Mn, P ≤ 0.012%, S ≤ 0.003%, 0.60%-0.90% of Cr, 0.35%-0.50% of Mo, 0.40%-0.60% of Ni, 0.008%-0.030% of Ti, 0.015%-0.050% of Nb, 0.0008%-0.0025% of B, Ceq≤0.75%, with the balance being Fe and inevitable impurities. The production process of the present wear-resistant steel is short, the cost is low, and the produced steel has excellent mechanical properties, large thickness, high hardness, good toughness, and great welding performance.

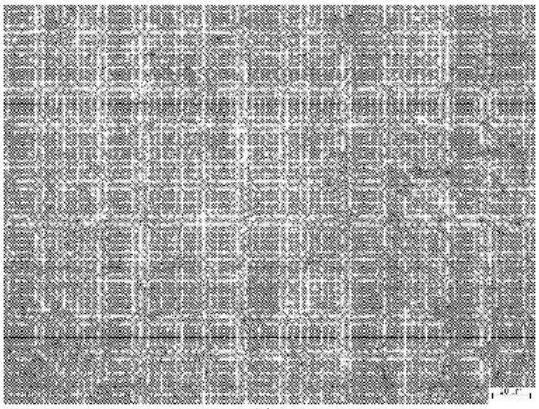

21: 2021/03743. 22: 2021/05/31. 43: 2023/03/16
51: A47G; B65D
71: KEEPCUP PTY LTD
72: FORSYTH, Abigail, BEDNARZ, Kate, KRIGSMAN, Marcus, MARSHALL, Graeme, WINDAHL, Lorrin
33: AU 31: 2019901749 32: 2019-05-22
54: A BEVERAGE CUP AND CLOSURE THEREFOR
00: -
A beverage cup (20) and closure (30) assembly (10) is provided. The closure (30) includes a lid (100), an upper member (200), and a lower member (300). The lid (100) includes an aperture (130) and a drinking opening (122). The upper member (200) is located on the outside of the lid (100) and is rotatable between a first position, in which the upper member (200) covers the drinking opening (122), and a second position, in which the drinking opening (122) is unobstructed by the upper member (200). The lower member (300) is located on the inside of the lid (100) and is coupled to the upper member (200) via the aperture (130) and is rotatable by the upper member (200) between a first position, in which lower member (300) closes the drinking opening (122) and a second position in which the drinking opening (122) is unobstructed by lower member (300).

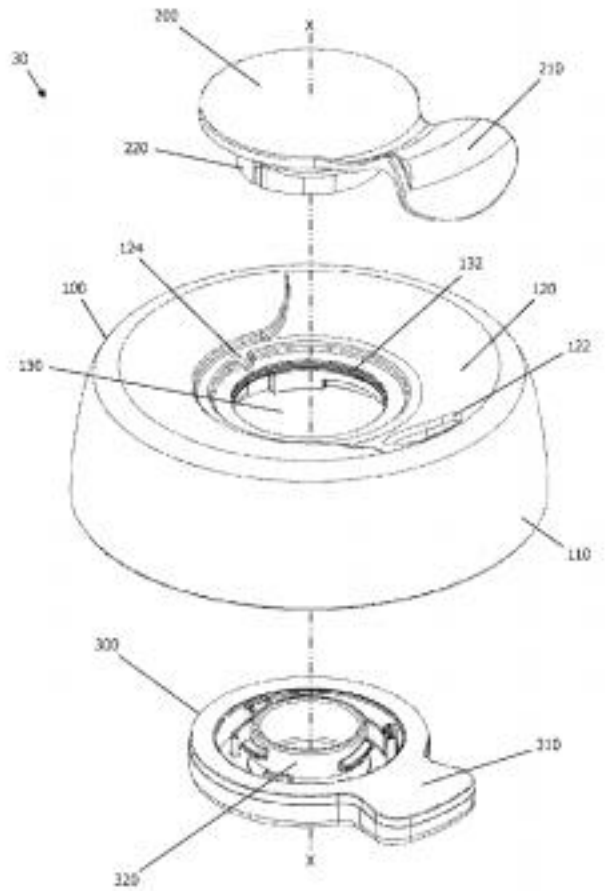

21: 2021/04028. 22: 2021/06/11. 43: 2023/03/24
51: E06B
71: Monapp (Pty) Ltd.
72: MANS, Albert Johan
33: ZA 31: 2020/01558 32: 2020-03-12
54: GASKET FOR AN ALUMINIUM FRAME ARRANGEMENT
00: -
A gasket seal for a frame arrangement is provided, the frame arrangement comprising a frame component and a bead component that can be fitted to the frame component to define a gap therebetween to accommodate a peripheral edge of a glass. The gasket seal comprises an elongate, flexible/compressible hollow body to sealingly abut against the glass, in use; a connector body extending from the hollow body, which can be securely fitted to/within a seal recess defined in the frame arrangement; and a seal body extending from the hollow body, the seal body having a first sealing portion to sealingly abut against the glass and a second sealing portion to sealingly abut against the frame arrangement to which the gasket seal is fitted. In an embodiment, the hollow body is a round cylindrical body, with the seal body being an elongate, substantially flat body that extends substantially tangentially relative to the hollow body

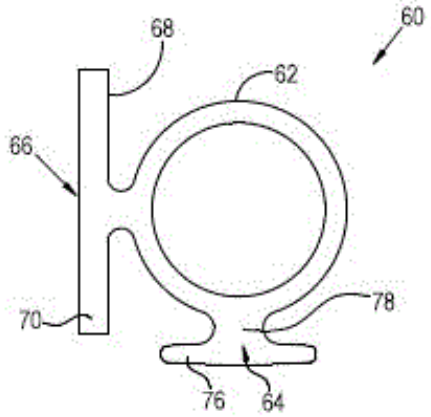

21: 2021/04108. 22: 2021/06/15. 43: 2023/03/29
51: A23L; A23P; A47G
71: UNILEVER IP HOLDINGS B.V.
72: CAROLA, LUIGI, GRUDKE-KATSCHUS, TANJA, KUNKEL, ANJA, SEEWI, GILA, WEIMAR, REGINE
33: EP 31: 18214406.3 32: 2018-12-20
54: SAVOURY COMPOSITION
00: -
The present invention relates to a savoury food article consisting of a solid, savoury composition having an elongate member extending therefrom, and also to a method for preparing such a savoury article and to the use of such a savoury article.

21: 2021/04624. 22: 2021/07/02. 43: 2023/04/13
51: C09K; F24H; F28D; F28F; H02S
71: GRAPHITE SOLAR POWER PTY LIMITED
72: CHAO, Jun, KHOO, Paul Soo-Hock
33: AU 31: 2019900074 32: 2019-01-09
54: THERMAL ENERGY STORAGE APPARATUS
00: -
The present invention provides a thermal energy storage apparatus comprising a housing which defines a hollow interior chamber, the chamber arranged in use to house graphite solids material in an inert gas atmosphere therewithin; and at least one conduit arranged to extend through the hollow interior chamber via inlet and outlet openings in the housing, the conduit being sealingly fitted to the

housing at the inlet and outlet openings, and an exterior surface of the or each conduit being arranged in a close facing relationship with the graphite solids material located within the hollow interior chamber, wherein, in use, the or each conduit is arranged for conveying a flow of a fluid therethrough such that in a first configuration, said flow transfers thermal energy to the graphite solid material, and in a second configuration, the graphite solid material transfers thermal energy to said flow.

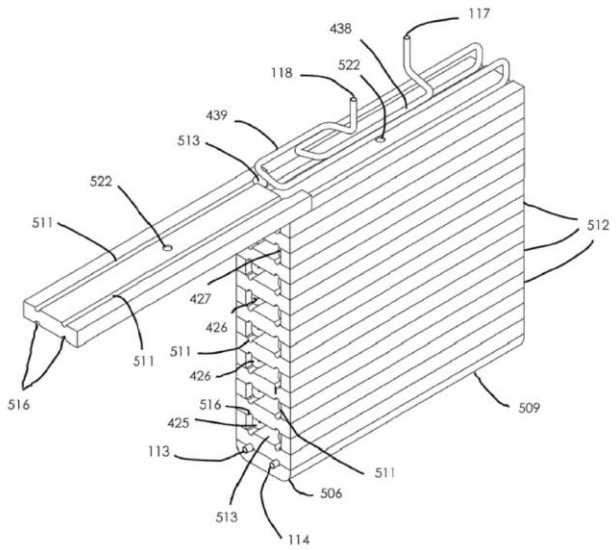

21: 2021/04645. 22: 2021/07/05. 43: 2023/03/24
51: C08L; C09K; E01C
71: UNIVERSAL PARTNERSHIP TRADINGS (PTY) LTD
72: DIBATE, Zakkie Israel
33: ZA 31: 2020/04033 32: 2020-07-02
54: METHOD OF AND PRODUCT FOR MAINTAINING ROADS
00: -
According to a first aspect of the invention, there is provided a black mortar surface course for a portion of a road, the black mortar surface course comprising weight absorbing particles such as waste tire crumb (typically 1 mm to 5 mm in size) within a suitable binder, the result being a high-performance (waterproof and weatherproof) adhesive, which cures by reaction with moisture contained in the atmosphere. In an embodiment, when the tire crumb and the binder mix, the mixture forms an easily application (black mortar) surface course, suitable for road usage when applied 40 – 50 mm thick. According to a second aspect of the invention, there is provided a product for repairing a portion of a road, the product comprising a sub-base course comprising a non-shrink cementitious, relatively quickly setting repair mortar and (10 mm – 15 mm, typically) aggregate gravel; and the surface course of the type defined above.

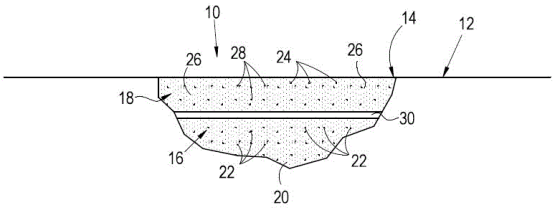

21: 2021/04680. 22: 2021/07/05. 43: 2023/03/29
51: G01M
71: SHUMKA, JASON, SHUMKA, THOMAS
72: SHUMKA, JASON, SHUMKA, THOMAS
33: CA 31: 3,026,919 32: 2018-12-05
54: IMAGING SYSTEM FOR ASSESSING INTEGRITY OF METAL MOTIVE PARTS IN INDUSTRIAL PLANTS
00: -
An installation, for use with a computer, for inspecting pinion gear teeth, the installation comprising: an enclosure, the enclosure including a back, a top, a bottom, sides and a front, which includes an opening, to define an interior; a transparent window, the transparent window separating at least a part of the interior from an ambient environment; at least one door operatively connected to the enclosure and retractably separating the transparent barrier from the ambient environment; a programmable logic controller which is housed in the enclosure behind the transparent window; a thermal imager which is housed in the enclosure behind the transparent window, is directed to the transparent window and is in electronic communication with the programmable logic controller; a visible light camera which is housed in the enclosure behind the transparent window, is directed to the transparent window and is in electronic communication with the programmable logic controller; and an air blade blower which is attached to the enclosure and is positioned to provide an air blade in front of the transparent window.

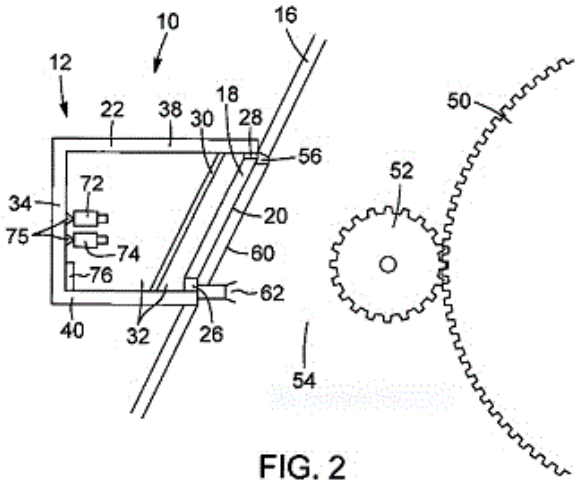

FIG. 2

21: 2021/04886. 22: 2021/07/12. 43: 2023/03/28
51: B65D
71: PONERA GROUP SAGL
72: REALI, MATTHEW, TALEBI AMIRI, MASOUD
33: EP 31: 19150440.6 32: 2019-01-05
33: EP 31: 19150439.8 32: 2019-01-05

54: ASSORTMENT OF PALLET MODULES, AND PALLET ASSEMBLY BUILT OF THE SAME

00: -

Assortment of pallet modules (10; 20; 30) configured to allow formation of a nested pallet assembly of at least two pallet modules, each pallet module comprising a main structural body (100; 200; 300) exhibiting a generally quadrilateral peripheral border (100A; 200A; 300A) with first to fourth lateral sides (101-104; 201-204; 301-304), a mating system (110, 120, 130, 140; 210, 220, 230, 240; 310, 320, 330,340) provided on said first to fourth lateral sides to allow nesting of the pallet module with another pallet module, a securing system (51-54) configured to allow the pallet module to be secured to or released from another pallet module, and a foot structure (90). The assortment of pallet modules includes a unit-size pallet module (10) whose main structural body (100) exhibits a unit size and at least one larger-size pallet module (20; 30) whose main structural body (200; 300) exhibits a length (L2; L3) corresponding to an integer multiple of a length (LI) of the main structural body of the unit-size pallet module, the unit-size pallet module and each larger-size pallet module being combinable with one another.

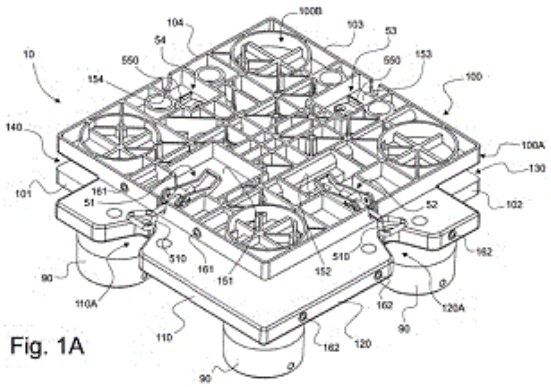

Fig. 1A

21: 2021/05027. 22: 2021/07/16. 43: 2023/03/16
51: A61B; A61C
71: Johnson & Johnson Consumer Inc.
72: FOUGERE, Richard
33: US 31: 16/225,800 32: 2018-12-19

54: DEVICES AND METHODS FOR COLLECTING SALIVA SAMPLES FROM THE ORAL CAVITY

00: -

Methods for collecting saliva from the oral cavity of a mammal comprising: placing a mouthpiece of a device comprising the mouthpiece in the oral cavity of a mammal, the mouthpiece comprising a chamber defined by front and rear inner walls and a base inner wall of the mouthpiece, each of the front and rear inner walls of the chamber comprising a plurality of openings, and a switch disposed in the mouthpiece; and the device further comprising a saliva collection reservoir, a fluid supply reservoir, a pump, and means for directing fluid through said device; activating the switch disposed in the mouthpiece to pump saliva from the oral cavity to the saliva collection reservoir for collection; deactivating the pumping of saliva to the saliva collection reservoir; and subsequently pumping fluid from the fluid supply reservoir to the mouthpiece for cleaning or treatment of the oral cavity.

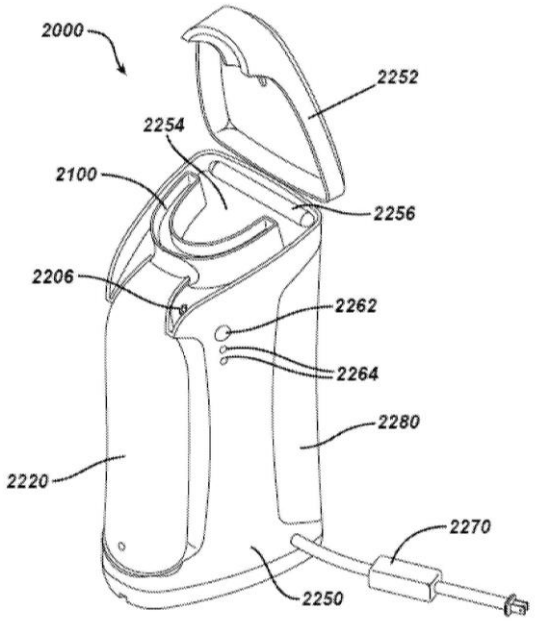

21: 2021/05162. 22: 2021/07/21. 43: 2023/04/11
51: G06K; G06Q; G16H
71: WOODYEAR, John
72: WOODYEAR, John
33: US 31: 16/233,173 32: 2018-12-27
54: SYSTEM AND METHOD FOR THE VERIFICATION OF MEDICATION
00: -
Systems and methods for verifying proper possession of a medication are disclosed. A reader device scans a code printed on the medication to extract an embedded serial number. The reader device captures biometric information of a person in possession of the medication. A first server queries a prescription database, which retrieves biometric characteristic data associated with the embedded serial number. A determination is made if the retrieved biometric characteristic data matches biometric characteristic data. The match information is displayed on the reader device.

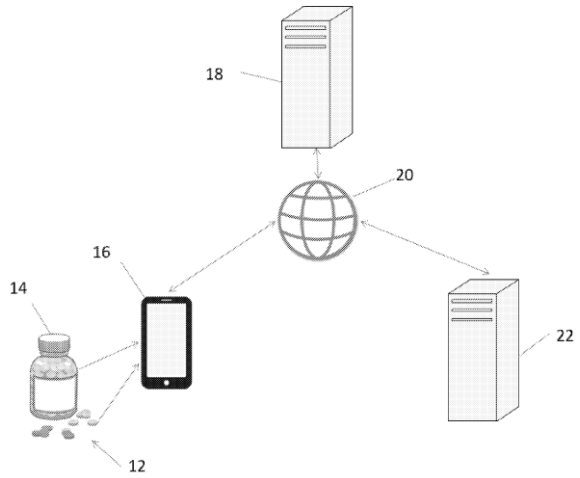

21: 2021/05387. 22: 2021/07/29. 43: 2023/04/11
51: H04L; H04W
71: TELEFONAKTIEBOLAGET LM ERICSSON (PUBL)
72: MURUGANATHAN, Siva, FRENNE, Mattias, FAXÉR, Sebastian, JÄRMYR, Simon, GAO, Shiwei
33: US 31: 62/790,736 32: 2019-01-10
54: PHYSICAL DOWNLINK SHARED CHANNEL (PDSCH) RESOURCE MAPPING FOR MULTI-TRANSMISSION POINT (TRP)
00: -
Methods and apparatuses are disclosed for resource mapping. In one embodiment, a wireless device is provided. The wireless device includes processing circuitry (84) configured to: receive a plurality of physical downlink control channel, PDCCH, transmissions where the plurality of PDCCH transmissions includes a 5 plurality of downlink control information, DCI, messages scheduling a plurality of physical downlink shared channel, PDSCH, transmissions, and at least two of the plurality of PDSCH transmissions one of partially and fully overlap in a time domain; and perform PDSCH resource mapping for decoding the plurality of PDSCH transmissions based at least in part on the plurality of DCI messages.

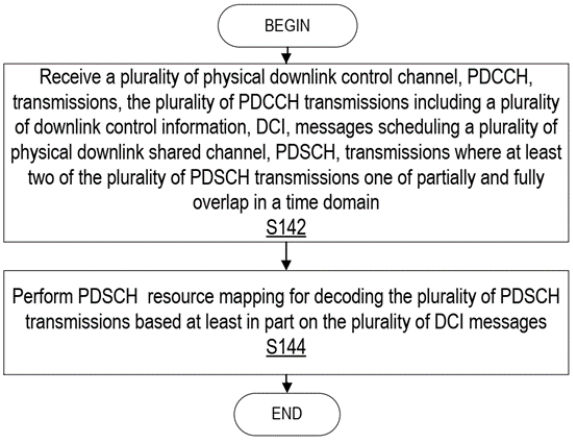

21: 2021/05509. 22: 2021/08/03. 43: 2023/03/27
51: G06F; G06Q
71: Remember Blue (Pty) Ltd.
72: PECKU, Suven, CASSIE, Keith Baharath, LUCAS, Wesley Wendell
33: ZA 31: 2020/00229 32: 2020-07-14
54: POSTHUMOUS MANAGEMENT OF DIGITAL OR TANGIBLE ASSETS
00: -
A computer-implemented method is provided, for setting up a system for the posthumous management of a person's assets and liabilities, including digital assets, after the person has died and in accordance with the person's wishes. The method comprises prompting, by at least one processor, the person to provide his/her assets and liabilities, including tangible assets, digital assets and data, to provide one consolidated location for the person's assets and liabilities, including social media profiles across various platforms; allowing, by at least one processor, the person to specify how their assets and liabilities are to be managed after their death; and specifying, by at least one processor, one or more trusted systems to be used for the verification of his/her death, with the system then being arranged to manage the person's assets and liabilities according to their wishes, after death.

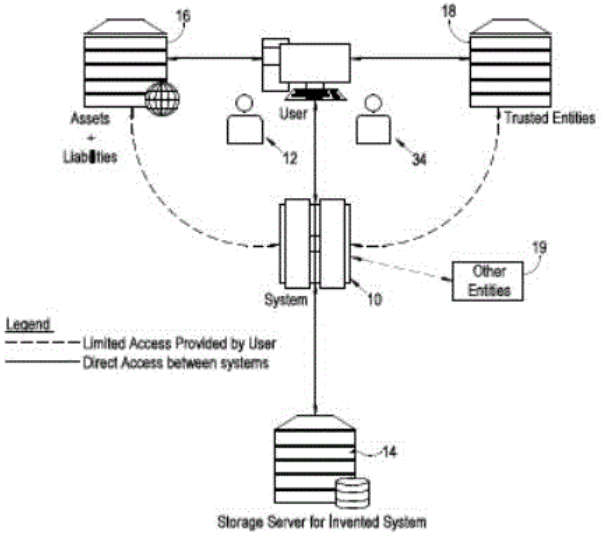

21: 2021/05510. 22: 2021/08/03. 43: 2023/03/24
51: A47K; E03C
71: JAFF, Nicholas Robert
72: MURRAY, Jared
33: ZA 31: 2020/04395 32: 2020-07-17
54: HAND WASHING STATION
00: -
A hand washing station to provide both water and soap to communities is provided, the station comprising a support frame; a plurality of soap containers, mounted on top of the support frame, for holding soap, each container having a soap dispensing arrangement for dispensing soap onto the hands of a person; and a water pipe adjacent the support frame, the water pipe defining a plurality of water dispensing arrangements for dispensing water onto the hands of the person, to enable the person to properly wash his/her hands. In an embodiment, the support frame is arranged to elevate the plurality of soap containers to hand height, to facilitate the dispensing of the soap onto the person's hand/s. In an embodiment, the water pipe runs the length of the support frame, with the water dispensing arrangements also being elevated to facilitate the dispensing of water onto the person's hand/s.

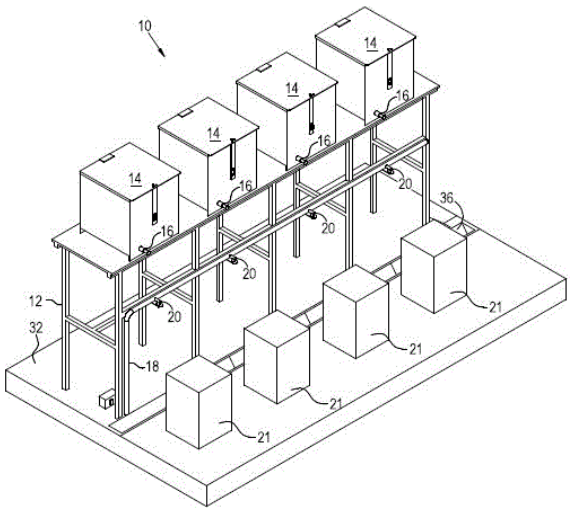

21: 2021/05515. 22: 2021/08/03. 43: 2023/03/29
51: C05F
71: PLANT BAG S.L.
72: VELASCO GARCIA, GREGORIO
33: EP 31: 19382005.7 32: 2019-01-04
54: COMPOSITION FOR PLANTS' ROOT DEVELOPMENT AND GROWING BAG COMPRISING IT
00: -
The composition contains, as essential components, coconut fibers, compost of sheep manure and Glomus Iranicum var. tenuihypahrum. The composition is included into a bag that comprises at least two parts joined together through at least a first weakened portion (4), allowing to separate it into two bags (la) each having an opening wherein said composition contained in said bag parts (la) is accessible. The composition inside each of the bags (la) is contacted with a plant (5) or at least a seed via the opening.

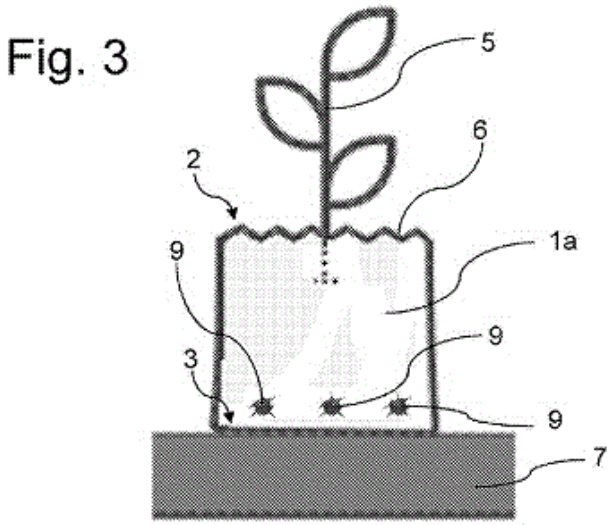

21: 2021/05554. 22: 2021/08/06. 43: 2023/03/29
51: C10C; C04B; D01F
71: CARBON HOLDINGS INTELLECTUAL PROPERTIES, LLC
72: ATKINS, CHARLES, LINDEMANN, GARRETT, TARGETT, MATTHEW
33: US 31: 62/610,037 32: 2017-12-22
54: METHODS FOR PRODUCING CARBON FIBERS, RESINS, GRAPHENE, AND OTHER ADVANCED CARBON MATERIALS FROM COAL
00: -
A method of producing advanced carbon materials can include providing coal to a processing facility, beneficiating the coal to remove impurities from the coal, processing the beneficiated coal to produce a pitch, and treating the pitch to produce an advanced carbon material such as carbon fibers, carbon nanotubes, graphene, carbon fibers, polymers, biomaterials, or other carbon materials.

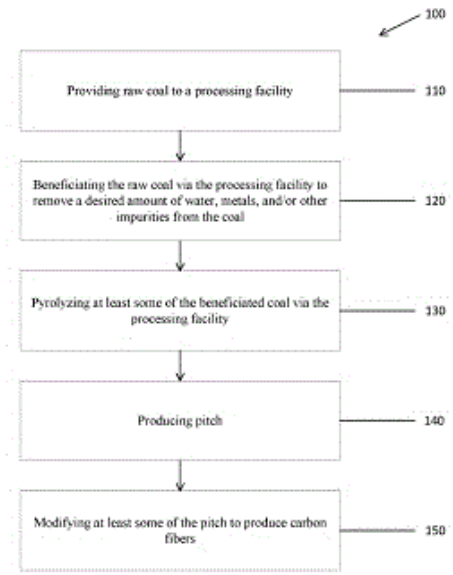

21: 2021/05561. 22: 2021/08/06. 43: 2023/03/30
51: B01D; B33Y
71: CATERPILLAR INC.
72: RODRIGUEZ, JAVIER A, MOREHOUSE III, DARRELL L
33: US 31: 16/267,850 32: 2019-02-05
54: 3D PRINTED MECHANICAL LOCKS FOR END CAP POTTING
00: -
A filter (300, 900) comprising a first end cap (902) defining a Polar coordinate system including a radial direction (R900), a circumferential direction (C900), and a Z-axis (Z900); and a filter medium (800) including a plurality of layers (306, 306') of solidified material and defining a first end (804) disposed along the Z-axis (Z900) and a second end (806) disposed along the Z-axis (Z900); wherein the first end (804) defines a first cavity (808) defining a first undercut (810) configured to prevent movement of the first end cap (902) along the Z-axis (Z900) relative to the filter medium (800).

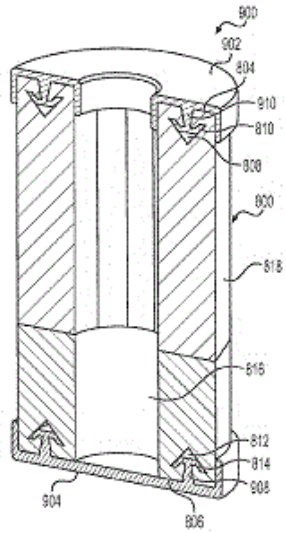

21: 2021/05562. 22: 2021/08/06. 43: 2023/03/30
51: B01D; B33Y
71: CATERPILLAR INC.
72: RODRIGUEZ, JAVIER A, MOREHOUSE III, DARRELL L, SPENGLER, PHILIP C
33: US 31: 16/268,930 32: 2019-02-06
54: FILTRATION MEDIA PACKS PRODUCED USING ADDITIVE MANUFACTURING
00: -
A filter comprising: a housing defining a Cartesian coordinate system including an X-axis, a Y-axis, and a Z-axis; and a filter medium (800) including a plurality of layers of solidified material; wherein at least one (802) of the plurality of layers of solidified material includes an undulating strip (804) of solidified material extending in a first predetermined direction (806) forming a first angle (808) with the X-axis.

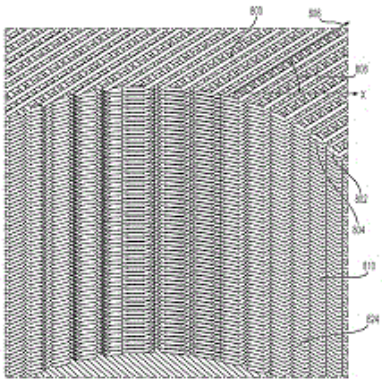

21: 2021/05732. 22: 2021/08/12. 43: 2023/05/22

51: F03D; G05B
71: SENTIENT SCIENCE CORPORATION, ACCIONA ENERGIA, S.A.
72: KUMAR, Vijayant, BOLANDER, Nathan, AUER, Gunther, ZALACAIN, Iñigo, IRUJO, Mercedes, IRIARTE, Enrique
33: US 31: 62/786,817 32: 2018-12-31
54: METHODS AND SYSTEMS FOR PREDICTING RISK OF OBSERVABLE DAMAGE IN WIND TURBINE GEARBOX COMPONENTS
00: -
Embodiments disclosed herein may include methods, systems, and tangible, non-transient, computer-readable media having instructions thereupon for determining a damage state of a wind turbine gearbox. A method performed, executed on a processor of a system, or implemented by a processor as instructions, may comprise producing a damage state diagnostic, producing a damage progression model for the wind turbine gearbox using operational data and a state transition function, and combining the damage state diagnostic with the damage progression model using a hybrid prognostics model to produce a probability distribution of a current damage state estimate. Producing the damage state diagnostic may comprise obtaining a measurement dataset for the wind turbine gearbox, integrating field-operator-provided intelligence into the measurement dataset, normalizing the measurement dataset with respect to a known failure behavior for the wind turbine gearbox, and combining the normalized measurement dataset with the known failure behavior to produce the damage state diagnostic.

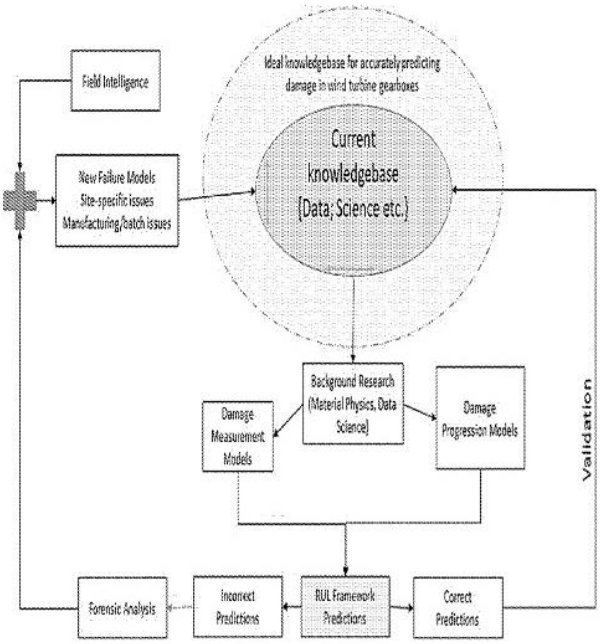

21: 2021/05781. 22: 2021/08/13. 43: 2023/03/30
51: C09K
71: HOPE MEDICAL ENTERPRISES, INC. DBA HOPE PHARMACEUTICALS
72: SHERMAN, CRAIG
33: US 31: 62/468,871 32: 2017-03-08
54: INTRADIALYTIC USE OF SODIUM THIOSULFATE
00: -
Provided herein are methods for maintaining physiological levels of thiosulfate in a subject undergoing hemodialysis. Also provided herein are methods of administering pharmaceutically acceptable sodium thiosulfate to a subject undergoing hemodialysis.

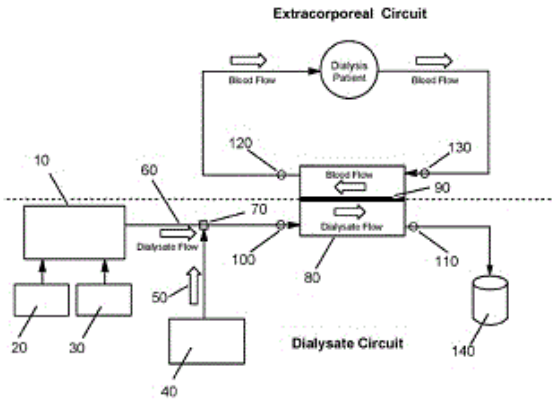

21: 2021/05802. 22: 2021/08/13. 43: 2023/03/30
51: B65D; B65B
71: BONDUELLE
72: SENECHAL, SÉBASTIEN, DUCEZ, CHRISTIAN, DUPONT, LAURENT
33: FR 31: 19 02077 32: 2019-02-28
54: METHOD AND PLANT FOR PACKAGING PRODUCTS, AND METHOD FOR OBTAINING A PLANT AND A CONTAINER
00: -
The invention relates to a method for packaging products, in particular oxygen-sensitive products, in containers, said containers each having an opening. According to the invention, the controlled atmosphere is set up in a conveyor chamber (4) inside which the open containers travel towards the closure chamber, by the following combined actions: - an action a) of injecting a flow of treatment gas (G) into said closure chamber (3) downstream of the conveyor chamber (4) in the direction of travel of the open containers, - an action b) of evacuating the open containers (1) present in the conveyor chamber (4).

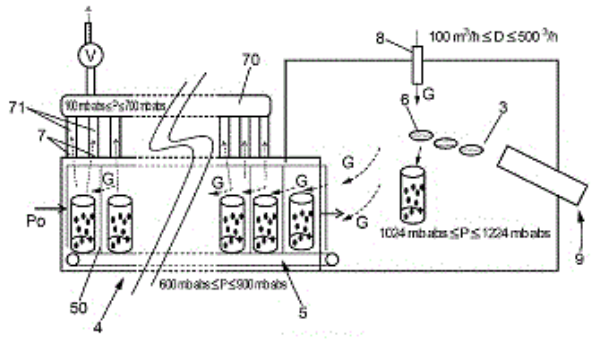

21: 2021/05806. 22: 2021/08/13. 43: 2023/03/30
51: A61K; A61Q
71: UNILEVER GLOBAL IP LIMITED
72: LOU, ANJING
33: EP 31: 19166593.4 32: 2019-04-01
54: MULTIPLE EMULSION COMPRISING AN OIL CONTINUOUS NANOEMULSION AND A METHOD FOR USING THE SAME
00: -
Multiple emulsions comprising an internal phase which is an oil continuous nanoemulsion are described. The multiple emulsions are water continuous, stable, provide moisturizing benefits and can comprise a high concentration of water soluble actives.

21: 2021/05840. 22: 2021/08/16. 43: 2023/03/30
51: H04N
71: BEIJING BYTEDANCE NETWORK TECHNOLOGY CO., LTD., BYTEDANCE INC.
72: ZHU, WEIJIA, ZHANG, LI, XU, JIZHENG, ZHANG, KAI, LIU, HONGBIN, WANG, YUE
33: CN 31: PCT/CN2019/075994 32: 2019-02-24
54: INDEPENDENT CODING OF PALETTE MODE USAGE INDICATION
00: -
Devices, systems and methods for palette mode coding are described. An exemplary method for video processing includes performing a conversion between a block of a video region of a video and a bitstream representation of the video. The bitstream representation is processed according to a first format rule that specifies whether a first indication of usage of a palette mode is signaled for the block and a second format rule that specifies a position of the first indication relative to a second indication of usage of a prediction mode for the block.

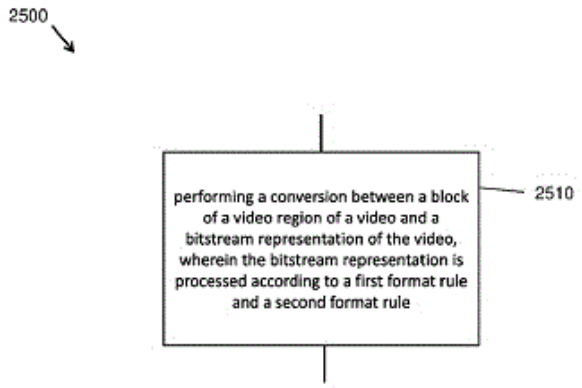

21: 2021/05842. 22: 2021/08/16. 43: 2023/03/29
51: G06T; B24B
71: FREEDOM AUTOMATION SOLUTIONS LLP
72: SYTENKO, IVAN NIKOLAYEVICH
33: IN 31: 201821041909 32: 2019-02-05
54: A GEMSTONE POLISHING ROBOT
00: -
Aspects of the present disclosure provide a gemstone polishing robot and method of polishing gemstone using the gemstone polishing robot. The present disclosure provides a robot for polishing a gemstone, comprising: a gemstone evaluation apparatus, the apparatus comprising: an illumination unit, configured to illuminate a gemstone; at least one detector, configured to detect a light emergent from said gemstone; and a gemstone evaluation

unit, which when executed by one or more processors, detects one or more gemstone parameters based on the detection of the light emergent from said gemstone; and a gemstone polishing unit comprising: a gemstone holding unit for supporting a gemstone in contact with an abrasive surface; and an image processing unit, which when executed by one or more processors, compares said one or more detected gemstone parameters with one or a plurality of pre-determined gemstone parameters, and generates a feedback signal, the gemstone polishing unit being configured to polish the gemstone based on the feedback signal.

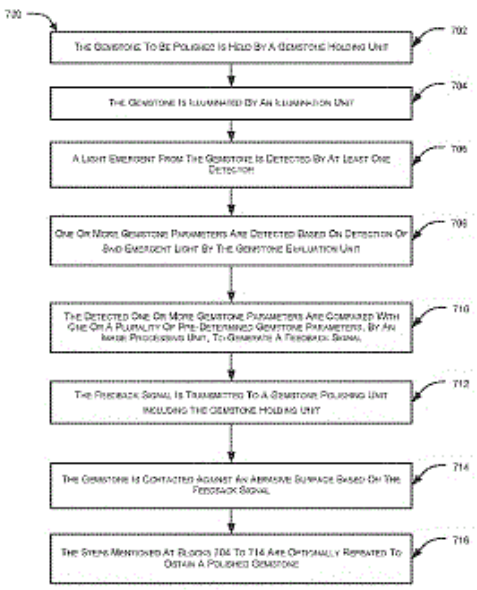

21: 2021/05843. 22: 2021/08/16. 43: 2023/03/29
51: B24B
71: FREEDOM AUTOMATION SOLUTIONS LLP
72: SYTENKO, IVAN NIKOLAYEVICH
33: IN 31: 201821041911 32: 2019-02-05
54: A GEMSTONE POLISHING ROBOT
00: -
Aspects of the present disclosure provide a gemstone polishing robot and a method of polishing gemstone using the gemstone polishing robot. In an embodiment, the robot comprises: a balk (1) supported on a base (3); a head (5) coupled with the balk (1) through a guide (6) and a drive (7) such that the head (5) is vertically displaceable relative to the balk (1); a gemstone holding unit (25) coupled with the head (5) and configured to support a gemstone in contact with an abrasive surface (21) in a desired orientation; an encoder (30) configured to detect a depth of polishing of the gemstone in each of said one or a plurality of polishing iterations; and a gemstone modelling unit, which when executed by one or more processors, estimates at least one gemstone parameter based on an initial model of the gemstone and the detected depth of polishing of the gemstone in each of said one or a plurality of polishing iterations.

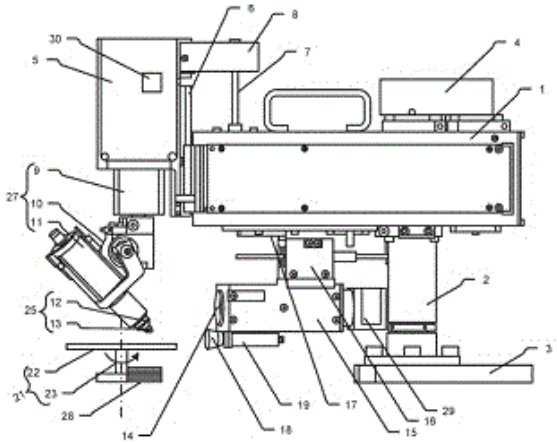

21: 2021/05847. 22: 2021/08/16. 43: 2023/03/29
51: A61K
71: AEOVIAN PHARMACEUTICALS, INC.
72: TZANNIS, STELIOS T, MASSEY, IAN J, FROIDBISE, ALEXANDRE, EPPE, GUILLAUME
33: US 31: 62/795,482 32: 2019-01-22
54: MTORC MODULATORS AND USES THEREOF
00: -
Novel rapamycin analogs and uses thereof are disclosed herein. The rapamycin analogs of the present disclosure show increased mTORC1 specificity and lowered mTORC2 specificity relative to rapamycin.

21: 2021/05889. 22: 2021/08/17. 43: 2023/03/29
51: B01D
71: BENESI, STEVE C
72: BENESI, STEVE C
33: US 31: 62/919,383 32: 2019-03-08
54: FILTER APPARATUS, FILTER DISC SECTORS, FILTER ELEMENTS AND USES
00: -
A filtration device can be configured to form filter cakes and filtrate by filtering solid particulates from a slurry. Some embodiments of the filtration device

can utilize a mechanism that is configured to separate the formed filter cake from a disc sector for subsequent processing of the solid particulates of the filter cake and/or the formed filtrate. Embodiments of the filter device and/or mechanisms of the filter device as well as methods of making and using the same can help provide improvements in operational efficiency for processing operations in which solids are to be filtered from a slurry.

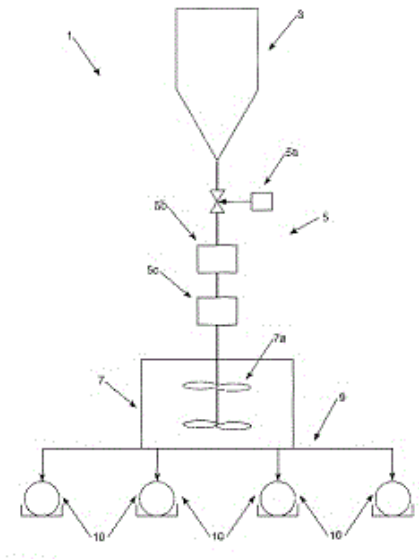

21: 2021/05892. 22: 2021/08/17. 43: 2023/03/29
51: B32B
71: KAHLMAN, STURE
72: KAHLMAN, STURE
33: SE 31: 1950062-8 32: 2019-01-18
54: POST
00: -
A post (1) comprises a first end (4) and a second end (5). The first end (4) comprises a connection arrangement for fixing the post to the ground or the bottom under water and wherein the post (1) is tubular. A first layer (14) of the post is made of a plastic and a second layer (15) is made of a composite material having a higher e-modulus than that of the plastic and wherein the first layer (14) comprises at least one hole (16) which the composite material of the second layer (15) extends at least partly into.

21: 2021/05920. 22: 2021/08/18. 43: 2023/03/29
51: C07K
71: MERUS N.V.
72: GEUIJEN, CECILIA ANNA WILHELMINA, DE KRUIF, CORNELIS ADRIAAN, THROSBY, MARK, LOGTENBERG, TON, BAKKER, ALEXANDER BERTHOLD HENDRIK
33: EP 31: 14167066.1 32: 2014-05-05
33: EP 31: 14157360.0 32: 2014-02-28
54: ANTIBODY THAT BINDS ERBB-2 AND ERBB-3
00: -
The invention relates among others to antibodies comprising a first antigen- binding site that binds Erb B-2 and a second antigen-binding site that binds Erb B- 3. The antibodies can typically reduce a ligand-induced receptor function of Erb B-3 on a Erb B-2 and Erb B-3 positive cell. Also described are method for the treatment and use of the antibodies in imaging and in the treatment of subjects having an Erb B-2, Erb B-3 or Erb B-2/3 positive tumor.

21: 2021/05932. 22: 2021/08/18. 43: 2023/04/11
51: E04F
71: GOLCONDA HOLDINGS, LLC
72: LEBLANC, Shane S., LAUTZENHISER, Lloyd L., LEBLANC, Melinda
33: US 31: 62/794,366 32: 2019-01-18
33: US 31: 16/370,693 32: 2019-03-29
54: SYSTEMS AND METHODS FOR PRODUCING MAGNETICALLY RECEPTIVE LAYERS AND MAGNETIC LAYERS FOR USE IN SURFACE COVERING SYSTEMS
00: -
A method for producing a surface covering system comprising magnetically receptive layers affixed to surface covering units and magnetized underlayments for use in securing surface covering units to supporting surfaces. The system includes isotropic magnetized floor covering units and anisotropic magnetized underlays for securing surface covering units. The system includes a set of formulations including ferrites and rare earth materials, oils and plasticizer and binding agents to optimize performance to meet design and application criteria.

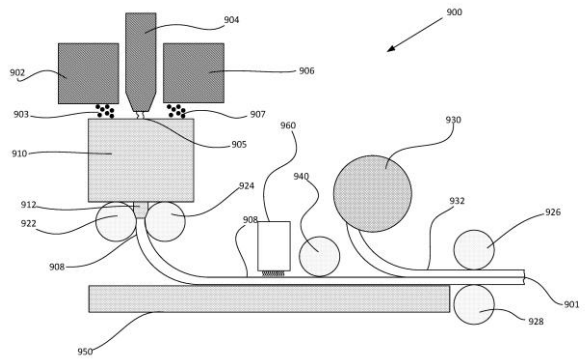

21: 2021/05943. 22: 2021/08/18. 43: 2023/03/29
51: G06F
71: SAMSUNG ELECTRONICS CO., LTD.
72: CHO, JOUNGMIN, KIM, HARKSANG, KIM, JIYONG, AN, JUNGCHUL, LEE, SUNGJUN, KIM, KWANGTAI, YEOM, DONGHYUN
33: KR 31: 10-2019-0019545 32: 2019-02-19
54: FOLDABLE ELECTRONIC DEVICE INCLUDING PLURALITY OF WINDOWS
00: -
A foldable electronic device is provided. The electronic device includes a flexible display, a first window including a first surface facing the flexible display and a second surface facing the opposite direction to the first surface, the first surface adhered to at least partial region of the flexible display via a first adhesive, and a second window adhered to at least partial region of the second surface of the first window via a second adhesive, in which the first adhesive has a greater thickness than the second adhesive.

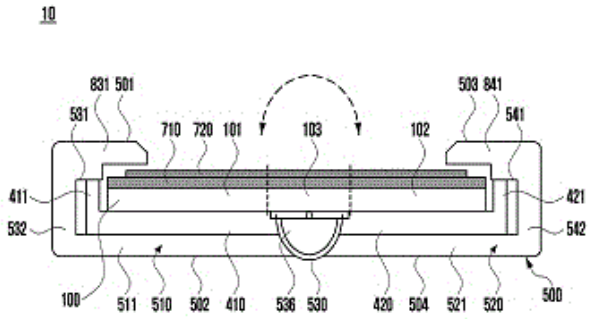

21: 2021/05969. 22: 2021/08/19. 43: 2023/03/29
51: A61L; C04B; G01N; G07D; B82Y
71: FÁBRICA NACIONAL DE MONEDA Y TIMBRE - REAL CASA DE LA MONEDA, CONSEJO SUPERIOR DE INVESTIGACIONES CIENTIFICAS
72: MOURE ARROYO, ALBERTO, FERNÁNDEZ LOZANO, JOSÉ FRANCISCO, FUERTES DE LA LLAVE, VÍCTOR, ENRÍQUEZ PÉREZ, ESTHER, GARCÍA JUEZ, VICENTE
33: EP 31: 19382045.3 32: 2019-01-22
54: RAMAN MARKERS
00: -
The present invention relates to a security marker; a method of preparing same; the use of said security marker; a security article, document, or element comprising said marker; the use of said security article, document, or element; an object of value comprising said marker; a method of preparing said security article, document, or element or said object of value; a method for determining the authenticity of said security article, document, or element or said object of value; and a system for determining the authenticity of said security article, document, or element or said object of value.

21: 2021/05970. 22: 2021/08/19. 43: 2023/03/28
51: C07D; A61K; A61P
71: HANMI PHARMACEUTICAL CO., LTD.
72: HONG, DONG JIN, JUNG, SEUNG HYUN, PARK, CHANG HEE, KIM, SEO HEE, HWANG, JI YOUNG, AHN, YOUNG GIL
33: KR 31: 10-2019-0019544 32: 2019-02-19
54: NOVEL HETEROTRICYCLIC DERIVATIVE COMPOUND AND USE OF SAME
00: -
The present invention relates to a novel heterocyclic derivative compound and a use of same, and more specifically, to a novel heterotricyclic derivative compound having inhibitory activity on enhancer of zeste homolog 1 (EZH1) and/or enhancer of zeste homolog 2 (EZH2), a pharmacologically acceptable salt thereof, or a pharmaceutical composition comprising said compound.

21: 2021/06011. 22: 2021/08/20. 43: 2023/05/08
51: F24S
71: WORTHINGTON, Richard, John
72: WORTHINGTON, Richard, John
33: AU 31: 2019900463 32: 2019-02-13
33: AU 31: 2019901056 32: 2019-03-29
54: A MULTI-CHAMBER SOLAR COLLECTOR
00: -
The present invention provides an apparatus for heating a fluid using solar energy. The apparatus

comprises: a fluid source, a first chamber comprising a fluid inlet to allow one-way movement of a fluid from the fluid source to the first chamber, a second chamber comprising a fluid outlet to allow the controlled movement of a fluid internal the second chamber to a further chamber or external the apparatus, and a fluid connection between the first and second chambers to allow substantially one-way movement of a fluid from the first chamber to the second chamber. Each of the chambers is fluid tight and configured as a solar collector to heat a fluid therein. The apparatus as a whole operates such that under even incident solar radiation a fluid is heated in each of the chambers and upon thermal expansion of the fluid, the fluid is moved in a controlled manner substantially one-way from the first chamber to the second chamber, and from the second chamber to a further chamber or to the outside the apparatus. By the movement of fluid from the first chamber to the second chamber, the first chamber donates a portion of the heat energy held by the fluid therein to the second chamber, the second chamber becomes enriched in heat energy by the gain of fluid and the first chamber becomes deprived in energy by the loss of fluid such that the second chamber contains fluid that is hotter than the first chamber.

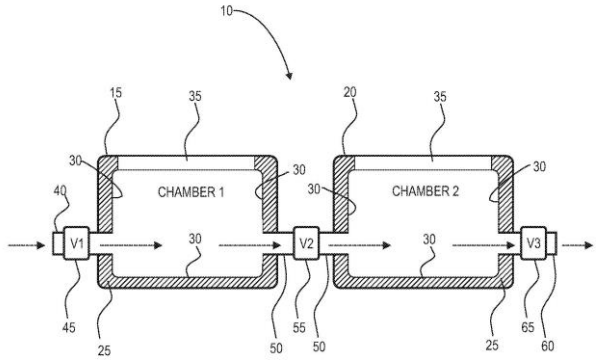

21: 2021/06018. 22: 2021/08/20. 43: 2023/03/27
51: B01L
71: LIGHTCAST DISCOVERY LTD
72: INGHAM, RICHARD JEREMY, CONTERIO, JASMIN KAUR CHANA, ISAAC, THOMAS HENRY
33: EP 31: 19158079.4 32: 2019-02-19
54: MICRODROPLET MANIPULATION DEVICE
00: -
A device for manipulating microdroplets comprises a microfluidic chip adapted to receive and manipulate microdroplets dispersed in a carrier fluid flowing along pathways therethrough characterised in that chip includes regions of differing or zero microdroplet fluid flow rates. Also disclosed is an electrowetting means of transporting emulsions and components of emulsions between the different flow regions.

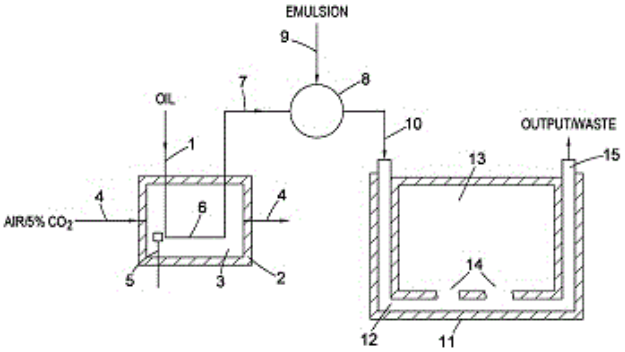

21: 2021/06102. 22: 2021/08/24. 43: 2023/04/11
51: G02B; G02C
71: TELEFONAKTIEBOLAGET LM ERICSSON (PUBL)
72: HUNT, Alexander, CALTENCO, Hector
54: A CONTACT LENS SYSTEM
00: -
A contact lens system (110) for placing in an eye for augmented reality systems is disclosed. The contact lens system (110) comprises a display (111) comprising a matrix of display elements; a driver unit (112) configured to receive data from a host (120) and to present the data on the display (111) and a set of sensors (113) integrated on the display (111) for measuring pupil size. The driver unit (112) is further configured to read outputs from the set of sensors to determine the pupil size and adjust a size of an active area of the display.

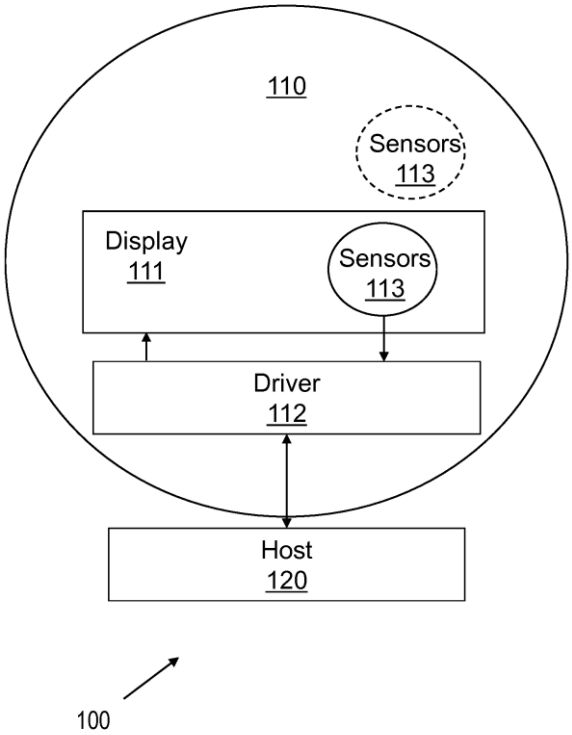

21: 2021/06234. 22: 2021/08/27. 43: 2023/03/22
51: A01H; C12N
71: BETTERSEEDS LTD
72: SHERMAN, TAL, MARGALIT, IDO, COREM, SHIRA
33: US 31: 62/809,584 32: 2019-02-23
54: POWDERY MILDEW RESISTANT CANNABIS PLANTS
00: -
The present invention discloses a modified Cannabis plant exhibiting enhanced resistance to powdery mildew (PM). The aforementioned modified Cannabis plant comprises a targeted genome modification conferring reduced expression of at least one Cannabis MLO (CsMLO) allele as compared to a Cannabis plant lacking said targeted genome modification. The present invention further discloses methods for production of the modified Cannabis plant using genome modification.

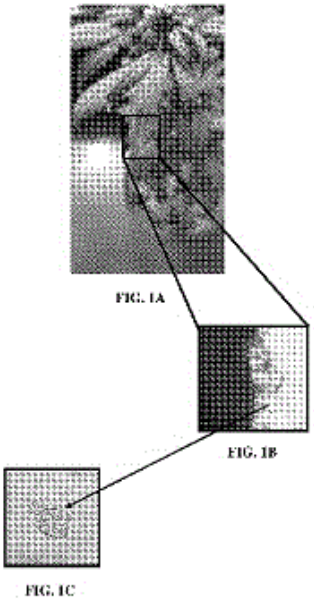

21: 2021/06236. 22: 2021/08/27. 43: 2023/03/09
51: A61P; A61K; C07D
71: MODERN BIOSCIENCES LIMITED
72: PATEL, LISA, SMITH, STEPHEN ALLAN, COLLINGWOOD, STEPHEN PAUL
33: GB 31: 1905520.1 32: 2019-04-18
54: N-ACYL-{4-[(4-ARYL-PHENYL)SULFONYLMETHYL]PIPERIDINE} COMPOUNDS AND THEIR THERAPEUTIC USE
00: -
The present invention pertains generally to the field of therapeutic compounds. More specifically the present invention pertains to certain N-acyl-{4-[(4-aryl- phenyl)sulfonylmethyl]piperidine} compounds of the following formula (collectively referred to herein as NASMP compounds) that are useful, for example, in the treatment of disorders (e.g., diseases) including, e.g., multiple myeloma, diffuse large B-cell lymphoma, acute myeloid leukemia, eosinophilic leukemia, glioblastoma, melanoma, ovarian cancer, chemotherapy resistant cancer, radiation resistant cancer, inflammatory arthritis, rheumatoid arthritis, psoriatic arthritis, psoriasis, ulcerative colitis, Crohn's disease, systemic lupus erythematosus (SLE), lupus nephritis, asthma, chronic obstructive pulmonary disease (COPD), Hidradenitis suppurativa, autoimmune hepatitis, etc. The present invention also pertains to pharmaceutical compositions comprising such compounds, and the use of such

compounds and compositions, for example, in therapy.

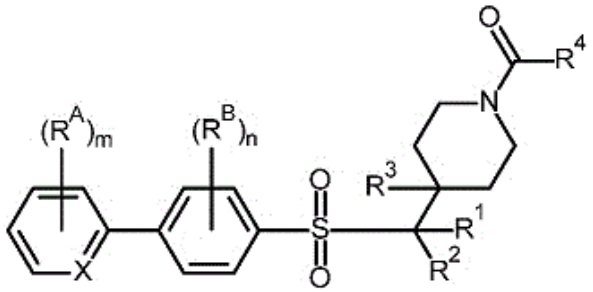

21: 2021/06547. 22: 2021/09/07. 43: 2023/05/12
51: A63B
71: WYLDE-BROWNE, Blair
72: WYLDE-BROWNE, Blair
33: AU 31: 2020903191 32: 2020-09-07
54: A DEVICE FOR HITTING A BALL
00: -
A strung bat for use in playing cricket is disclosed. The bat comprises an elongate handle for a user to hold the device and a blade elongated in the direction of the handle. The blade comprises a perimeter defining an internal space that is strung with an array of strings for hitting a ball. The perimeter frame has a leading edge and an opposing trailing edge, and the array of strings lies in a plane that may be substantially aligned with the leading edge of the frame or is closely adjacent to the leading edge of the frame. An apparatus for playing the game using the strung bat is also disclosed.

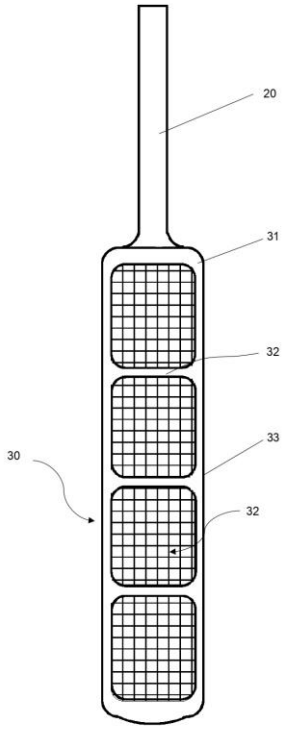

21: 2021/07020. 22: 2021/09/21. 43: 2023/03/02
51: E04B; E04C; E04G
71: STRUKSOL ENGINEERING (PTY) LTD
72: MOREL, Dane
54: MESH SUPPORT
00: -
A support for a mesh having a plurality of mesh elements is provided. The support comprises a self-supporting structure having a top edge and a bottom end, the top edge shaped to receive a mesh element to support its weight in use and wherein the structure is formed by bending an elongate sheet of material. Furthermore, a material blank is provided. The material blank is configured to be operatively bendable into a self-supporting structure to provide a support for a mesh, the structure having a top edge shaped to receive a mesh element and spaced apart from a bottom edge and the structure capable of supporting the weight of the mesh in use, the blank having a generally elongate shape with opposite elongate edges and opposite ends, one elongate edge operatively forming the top edge.

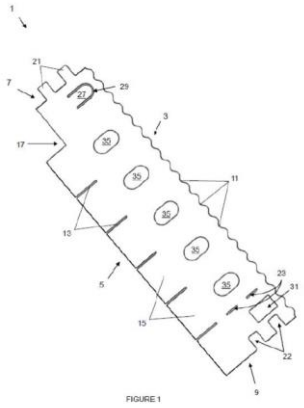

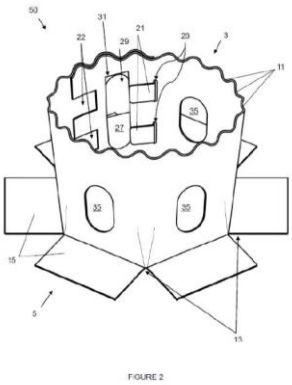

21: 2021/07121. 22: 2021/09/23. 43: 2023/04/18
51: B65D
71: ALPLA WERKE ALWIN LEHNER GMBH & CO. KG
72: Mayer ERWIN
33: CH 31: 00516/19 32: 2019-04-05
33: CH 31: 01467/19 32: 2019-11-20
33: CH 31: 01695/19 32: 2019-12-23
54: CONTAINER CLOSURE
00: -
The invention relates to a closure cap (11) for closing the pouring opening (33) of a container, said cap having a cylindrical threaded part (15) with an open rim (25) and an inner thread (27) which can co-operate with an outer thread (31) of a container neck (29) of the container (13), a security ring (17) which is designed to be held on a projection (35) formed on the container neck (29), a plurality of security webs (63) which can releasably connect the security ring (17) to the open rim (25), and a first retaining strip (19a) having a first and and a second end (39, 41), the first end (39) being securely connected to the open rim (25) of the threaded part (15) and the second end (41) being securely connected to the security ring (17). The closure cap comprises a second retaining strip (19b) having a third and a fourth end (51, 53), the third end (51) being securely connected to the open rim (25) of the threaded part (15) and the fourth end (53) being securely connected to the security ring (17). A circular web section (69) of the security ring (17) is formed between the first and the second ends (39, 51). A second projection (71) is formed on the outer wall of the web section (69).

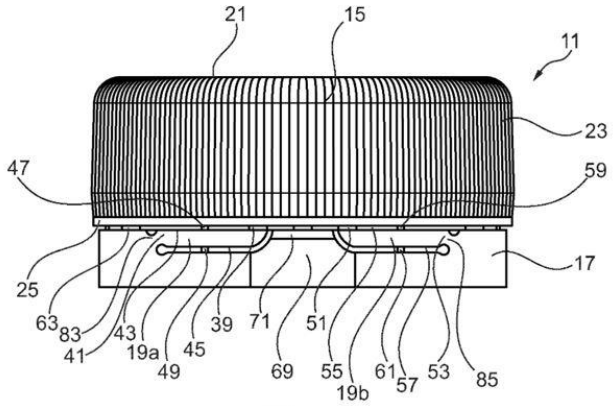

21: 2021/07402. 22: 2021/09/30. 43: 2023/04/11
51: F16B; G01D
71: SALUNDA LIMITED
72: FINLAY, Alan Patrick John, PICKLES, Philip Samuel, NEWTON, John Mark
33: GB 31: 1904172.2 32: 2019-03-26
33: GB 31: 1906318.9 32: 2019-05-03
33: GB 31: 1907447.5 32: 2019-05-26
33: GB 31: 1908506.7 32: 2019-06-13
33: GB 31: 1911161.6 32: 2019-08-05
33: GB 31: 1912349.6 32: 2019-08-28
54: FASTENER ASSEMBLY SENSOR UNIT
00: -
There is provided a sensor unit for a fastener assembly, the sensor unit comprising a mounting arranged to rigidly attach the sensor unit to, or adjacent to, a fastener assembly; and a sensor, that is an optical flow sensor or an inductive sensor, configured to sense movement of the fastener assembly. The sensor unit may comprise a processor arranged to process the output of the sensor to detect loosening of the fastener assembly and to output a signal representing the status of the fastener assembly. The sensor unit may comprise a wireless communication unit arranged to communicate the signal.

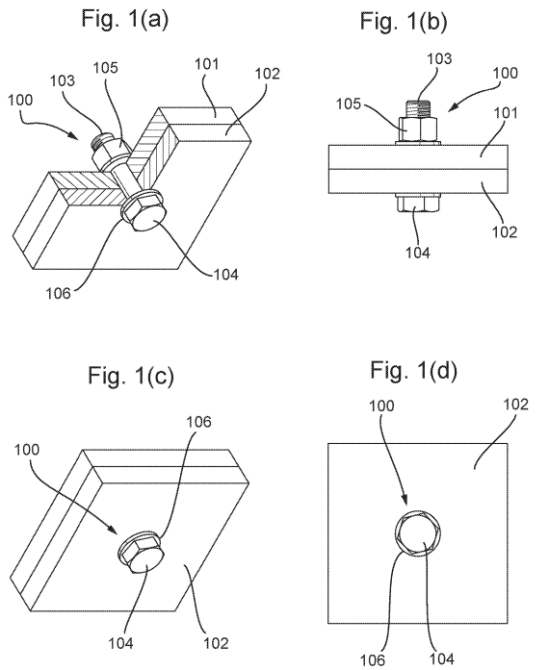

21: 2021/07565. 22: 2021/10/07. 43: 2023/04/03
51: A47K; B60P; B60R
71: STORYTELLER OVERLAND, LLC
72: HUNTER, Jeffrey, FREYERMUTH, Dan, DONALDSON, Adam, ISBELL, Mark, LANG, Brent, SLATER, Dave
33: US 31: 62/816,571 32: 2019-03-11
33: US 31: 16/814,270 32: 2020-03-10
54: RV RETROFIT SYSTEM
00: -
A vehicle retrofit system comprising a storage receptacle, a collapsible privacy/shower curtain receptacle, a folding counter assembly, and a seat/bed conversion assembly each of which is configured to be contained and deployed within an interior of a vehicle.

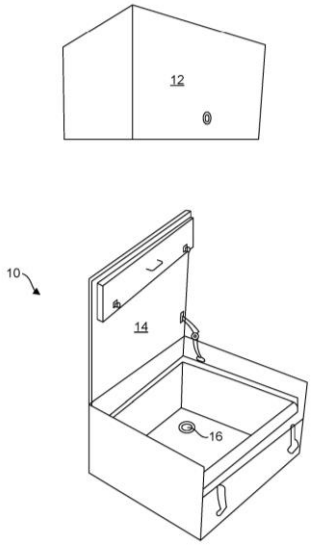

21: 2021/07653. 22: 2021/10/11. 43: 2023/04/11
51: C07D
71: NMD PHARMA A/S
72: KELLY, Nicholas, MCKENZIE, Michael John
33: EP 31: 19181262.7 32: 2019-06-19
54: PROCESS FOR THE PREPARATION OF CLC-1 CHLORIDE CHANNEL INHIBITORS
00: -
This disclosure relates to an improved chemical process for making compounds of formula I which are CIC-1 chloride channel inhibitors using the compounds of formula II as starting material. (Formula I, II)

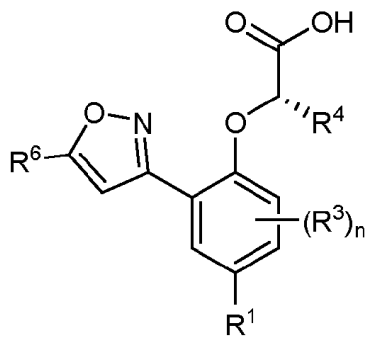

Formula I

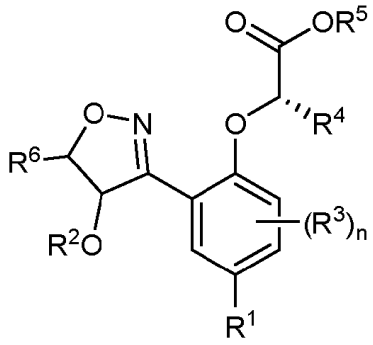

Formula II

21: 2021/07655. 22: 2021/10/11. 43: 2023/04/11
51: A61K
71: FOLLICUM AB
72: LINDAHL, Åke, ALENFALL, Jan, EKBLAD, Maria
33: EP 31: 19170868.4 32: 2019-04-24
54: TOPICAL FORMULATION
00: -
The present invention concerns a composition comprising a peptide, a saccharide and a lipid vehicle, which is suitable for topical delivery.

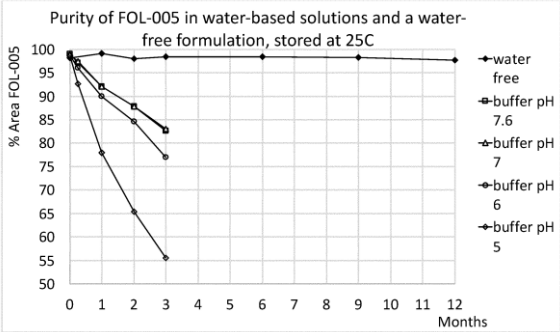

21: 2021/07812. 22: 2021/10/14. 43: 2023/03/22
51: B02C; B03D; B07B
71: FLSmidth A/S
72: WISDOM, Todd
33: US 31: 62/834,014 32: 2019-04-15
54: DRY GRINDING SYSTEM AND METHOD FOR REDUCED TAILINGS DEWATERING, IMPROVING FLOTATION EFFICIENCY, PRODUCING DRIER TAILINGS, AND PREVENTING FILTER MEDIA BLINDING
00: -
A minerals processing system (200, 300) comprising a flotation circuit (109) is characterized in that a dry grinding circuit precedes the flotation circuit (109). The dry grinding circuit may use a vertical roller mill (32) or roller grinder (302), and at least one dry air particle separation device (201, 304, 307) positioned between said vertical roller mill (32) or roller grinder (302) and the flotation circuit (109). The at least one dry air particle separation device (201, 304, 307) produces a dry fines stream (38) and a dry coarse stream (202). The coarse stream (202) is provided to the flotation circuit (109) to recover metal values, whereas the dry fines stream (38) circumvents the flotation circuit (109) and is combined with dewatered tailings (116) derived from material (110, 111) leaving the flotation circuit (109).

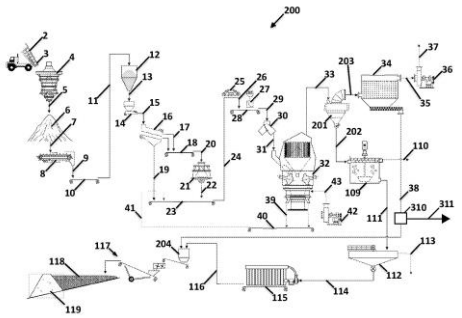

21: 2021/07989. 22: 2021/10/19. 43: 2023/03/22
51: B63B
71: SINN POWER GMBH
72: SINN, Philipp
33: DE 31: 10 2019 203 881.6 32: 2019-03-21
54: FRAMEWORK AND OFFSHORE SUPPORT STRUCTURES MADE THEREOF
00: -
The invention relates to a framework (50) for assembling an offshore framework structure in a modular manner, comprising a first bar (51) which functions as a floating body, a second bar (52), two posts (53) for supporting the bars (51, 52) in a substantially parallel manner, and two belts (54) for tensioning the framework (50). Connection elements (55) are arranged at each end of the bars (51, 52), said connection elements having flanges (56) for attaching the connection elements (55) to the bars (51, 52). Receiving areas (57) are arranged in the connection elements (55) transversely to the longitudinal direction (61) of the bars (51, 52) in order to attach the posts (53). Furthermore, the connection elements (55) have securing means (58) for securing belts (54) provided with tensioning devices (60) such that the framework (50) can be held in shape or diagonally tensioned by means of the tensioning devices (60).

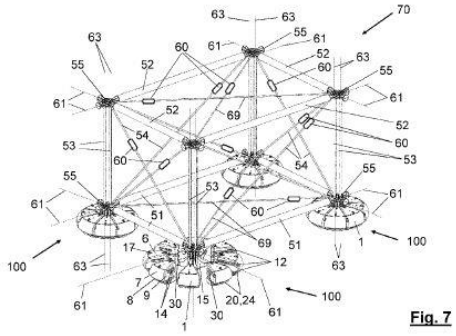

Fig. 7

21: 2021/08054. 22: 2021/10/20. 43: 2023/03/29
51: C03B
71: GLASSTECH, INC.
72: SCHNABEL, JR. JAMES P
33: US 31: 16/361,361 32: 2019-03-22
54: GLASS PROCESSING SYSTEM WITH VARIABLE BENDING STATION
00: -
A glass processing may include a heating station to heat glass sheets, and a bending station disposed downstream of the heating station to bend the heated glass sheets. The bending station may include first and second independent movement mechanisms configured to independently move first and second molds when the glass processing system is operated in a first mode, and to cooperate to move a third mold when the glass processing system is operated in a second mode. The system further includes a control system to control the movement mechanisms so that they operate independently when the glass processing system is operated in the first mode, and so that they operate simultaneously when the glass processing system is operated in the second mode.

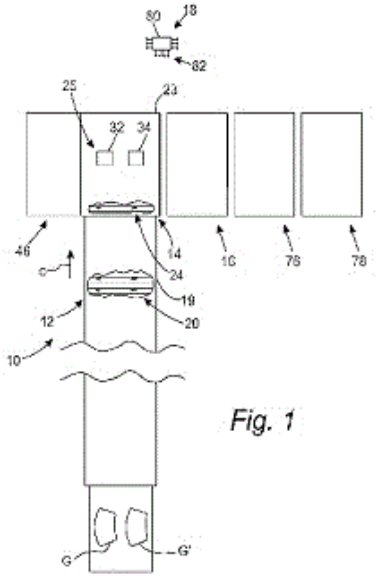

21: 2021/08083. 22: 2021/10/21. 43: 2023/04/11
51: A61K; C07C; A61P
71: NMD PHARMA A/S
72: KNUTSEN, Lars J.S., KELLY, Nicholas, SKOV, Martin Brandhøj, RIISAGER, Anders, SARASWAT, Neerja
33: EP 31: 19181270.0 32: 2019-06-19

54: COMPOUNDS FOR THE TREATMENT OF NEUROMUSCULAR DISORDERS

00: -

The present disclosure relates to compounds suitable for treating, ameliorating and/or preventing neuromuscular disorders, including the reversal of drug-induced neuromuscular blockade. The compounds as defined herein can inhibit the ClC-1 ion channel.

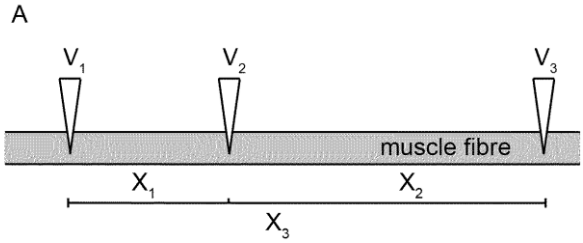

21: 2021/08457. 22: 2021/10/29. 43: 2023/03/22
51: A01N; A01P
71: INMOLECULE INTERNATIONAL LIMITED, GABRIELA LEÓN GUTIÉRREZ
72: LEÓN GUTIÉRREZ, Gabriela, LEÓN GUTIÉRREZ, Sergio Manuel
33: MX 31: MX/a/2019/003969 32: 2019-04-04

54: VARIOUS USES OF THE NANOPARTICULATE COMPOUND OF TITANIUM DIOXIDE FUNCTIONALIZED

00: -

The present invention refers to various uses of the compound of titanium dioxide modified with organic functional groups, inorganic radicals and herbal and/or fruit extracts adsorbed on its surface and pores, wherein said compound is used as: water disinfectant or purifier agent; biopesticide and post harvest; preservative in preparation of industrialized hygienic, cosmetic and food products; inductor or activator of tissue regeneration; in the pharmaceutical industry by administering it through different systemic pathways, being effective on treatment and prevention of infection processes caused by viruses, bacteria, fungi, spores, mycobacteria and parasites; microbial agent, mixed with water; antineoplastic for battling pathogenic microorganisms; microbial agent in the livestock, cattle and aquaculture industries.

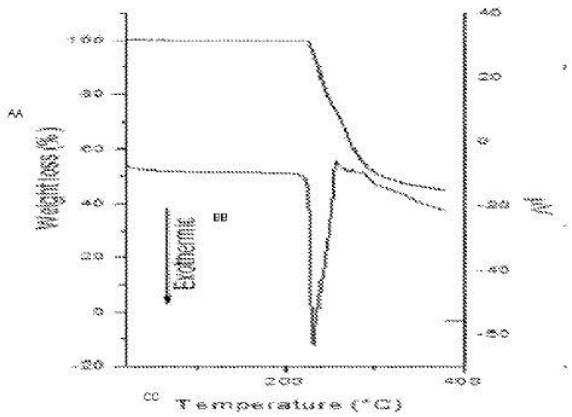

21: 2021/08516. 22: 2021/11/02. 43: 2023/04/11
51: C12N; C12Q
71: BASECLICK GMBH
72: FRISCHMUTH, Thomas, SERDJUKOW, Sascha, SOBOTTA, Jessica, GRAF, Birgit
33: EP 31: 19219326.6 32: 2019-12-23
33: EP 31: 20158810.0 32: 2020-02-21

54: METHOD OF AMPLIFYING MRNAS AND FOR PREPARING FULL LENGTH MRNA LIBRARIES

00: -

An inventive method for amplifying at least one RNA which is contained in a sample includes reverse transcribing the at least one RNA using a first primer, adding a dideoxy nucleotide which is modified in the

3'-position with a first partner of a pair of azide and alkyne molecules by action of a template-independent polymerase to attach a single 3'-azide- or 3'-alkyne-modified dideoxy nucleotide at the 3'-end of the obtained cDNA, adding an adapter molecule which comprises a polynucleotide sequence and at its 5'-end a second partner of such pair of azide and alkyne molecules and ligating the adapter to the 3'-modified cDNA under formation of a triazole linkage, adding a second primer which is complementary to at least a part of the adapter molecule and which contains at its 3'-end a nucleotide which is complementary to the dideoxy nucleotide at the 3'-end of the cDNA to effect hybridization and binding of the second primer overlapping the triazole linkage, adding a third primer and amplifying the full length cDNA. Variations of this method are also disclosed. Uses of such method especially for preparing a full length RNA library and for sequencing of a plurality of RNAs contained in a sample, as well as reagent kits for perfoming such methods are also disclosed and included in the invention.

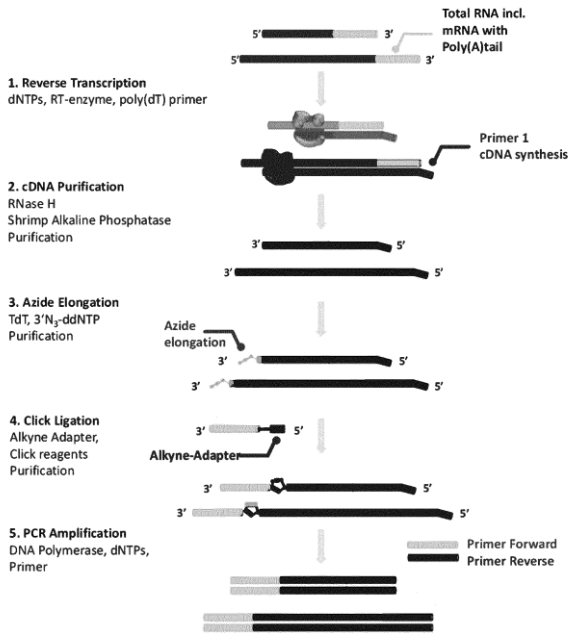

21: 2021/08991. 22: 2021/11/12. 43: 2023/03/16
51: A61K; A61P
71: GERON CORPORATION
72: STUART, MONIC J, KELSEY, STEPHEN
33: US 31: 61/799,069 32: 2013-03-15
33: US 31: 61/900,347 32: 2013-11-05
33: US 31: 13/841,711 32: 2013-03-15
33: US 31: 61/734,941 32: 2012-12-07

54: USE OF TELOMERASE INHIBITORS FOR THE TREATMENT OF MYELOPROLIFERATIVE DISORDERS AND MYELOPROLIFERATIVE NEOPLASMS

00: -

Provided herein are methods for reducing neoplastic progenitor cell proliferation and alleviating symptoms associated in individuals diagnosed with or thought to have myeloproliferative disorders, such as Essential Thrombocythemia (ET). Also provided herein are methods for using telomerase inhibitors for maintaining blood platelet counts at relatively normal ranges in the blood of individuals diagnosed with or suspected of having myeloproliferative disorders, such as ET.

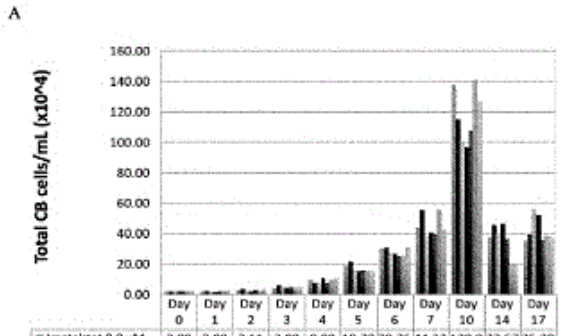

	Day 0	Day 1	Day 2	Day 3	Day 4	Day 5	Day 6	Day 7	Day 10	Day 14	Day 17
Imetelstat 0.9 uM	2.00	2.00	3.11	3.89	9.89	18.78	29.75	44.33	138.0	37.67	35.30
Imetelstat 1.875 uM	2.00	2.67	3.22	6.00	7.44	21.56	30.75	55.50	115.0	45.67	39.70
Imetelstat 3.75 uM	2.00	1.56	2.56	5.00	8.11	16.44	27.00	38.33	101.0	39.67	56.00
Imetelstat 7.5 uM	2.00	1.44	2.00	4.56	10.44	15.44	26.75	41.00	96.50	46.33	52.30
Imetelstat 15 uM	2.00	1.89	3.00	4.78	7.56	15.56	25.20	39.33	107.5	36.33	35.70
Standard Control	2.00	2.00	2.44	4.33	9.22	15.33	25.33	56.00	141.0	18.83	38.70
Solvent Control	2.00	2.56	3.33	4.67	11.22	15.33	31.25	42.33	127.0	20.00	37.70

21: 2021/08997. 22: 2021/11/12. 43: 2023/04/11
51: A61F
71: MOBIUS TECHNOLOGIES, LLC
72: FLEMING, Darren
33: US 31: 16/436,716 32: 2019-06-10

54: CABLE KNEE BRACE SYSTEM

00: -

It is the object of the invention to provide a knee bracing system that bolsters the body's natural ligaments, and accommodates user's with different natural Q-angles, to reduce the knees proneness to injury or re-injury. The invention is a cable system that acts much like the body's natural way that resists the forces that cause excessive joint movement and injury to the ACL and or MCL. As the

leg travels through the range of motion the cables provide external hyper extension, bending, and rotation support preventing the tibia bone from moving forward (hyper extending) or twisting (lateral rotation) and or laterally bending with respect to the femur.

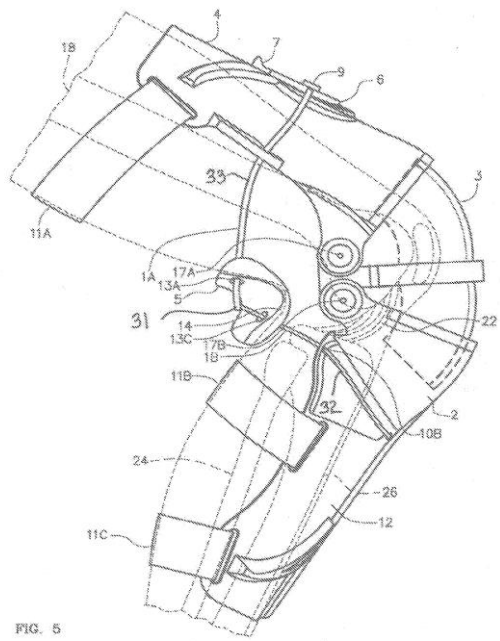

FIG. 5

21: 2021/09237. 22: 2021/11/18. 43: 2023/03/08
51: C01C; C08L; E01C
71: CSIR
72: MTURI (DO NOT USE), George Akim Jasper
33: ZA 31: 2020/07201 32: 2020-11-19
54: RUBBER MODIFIED BITUMINOUS BINDERS
00: -
A method of re-stiffening an over-digested rubber modified bituminous binder includes admixing a reactive, stiffness inducing organic additive with the over-digested rubber modified bituminous binder to produce a re-stiffened rubber modified bituminous binder with an increased softening point. Typically, the re-stiffened rubber modified bituminous binder exhibits an improved Jnr, an improved storage stability, and an improved stress resilience. The admixing takes place at an elevated temperature of at least 185°C. The invention also provides a rubber modified bituminous binder that includes a digested rubber bituminous admixture with a softening point of at least 55°C and a dynamic viscosity at 190°C of less than 2000 mPa.s. The rubber modified bituminous binder is suitable for both asphalt and seal surfacing applications. The invention extends to a method of sealing or paving a surface that includes applying a layer which includes a rubber modified bituminous binder to the surface, the rubber modified bituminous binder being in the form of a digested rubber bitumen admixture with a softening point of at least 55°C and a dynamic viscosity at 190°C of less than 2000 mPa.s.

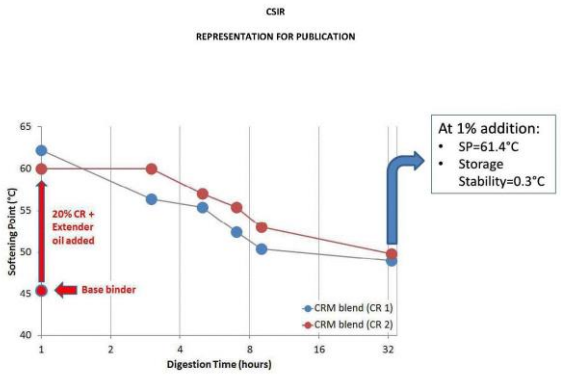

21: 2021/09264. 22: 2021/10/27. 43: 2023/04/12
51: E21C; E21F
71: Clear Creek Trading 167 (Pty) Ltd.
72: VAN DER MERWE, Lukas Cornelius
33: ZA 31: 2020/05731 32: 2020-09-16
54: BLAST CURTAIN
00: -
A blast curtain which includes a wire mesh made of low carbon steel wire having a plurality of wire ends along a fringe of the wire mesh and wherein adjacent wire ends are tied up in order to strengthen and reinforce the fringe and as a result, the blast curtain.

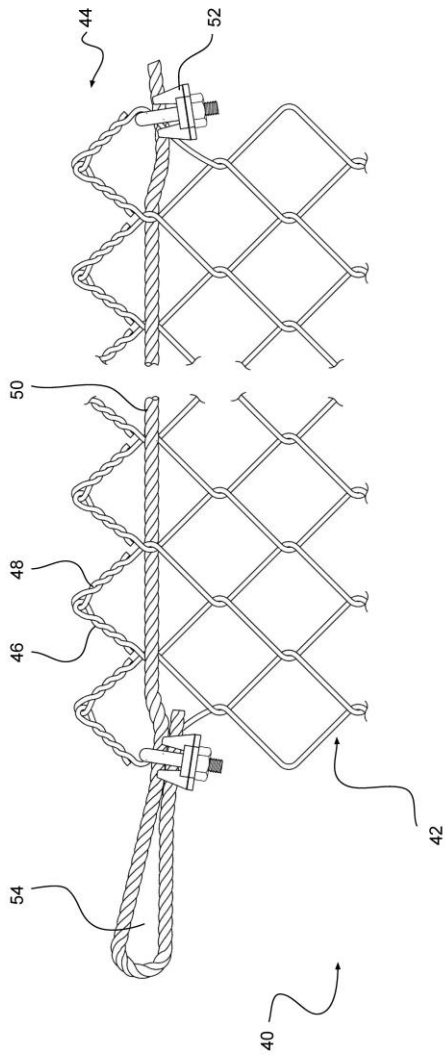

Figure 7

21: 2021/09660. 22: 2021/11/26. 43: 2023/04/11
51: A61K; A61P
71: ADC THERAPEUTICS SA, MEDIMMUNE LIMITED
72: VAN BERKEL, Patricius Hendrikus Cornelis
33: GB 31: 1908128.0 32: 2019-06-07
54: PYRROLOBENZODIAZEPINE-ANTIBODY CONJUGATES
00: -
The present disclosure relates to antibody-drug conjugates (ADCs) of pyrrolobenzodiazepines (PBDs) conjugated to an antibody that binds to KAAG1 (kidney-associated antigen 1).

21: 2021/09717. 22: 2021/11/29. 43: 2023/04/11
51: A61B; G01N
71: SCILOGICA CORP.
72: BARWELL, Nicholas Paul, CRANE, Barry Colin, SAGAR, Praveen, MACKENZIE, Alasdair Allan
33: US 31: 16/402,040 32: 2019-05-02
33: EP 31: 19190352.5 32: 2019-08-06
54: CALIBRATION OF A GAS SENSOR
00: -
There is disclosed a method of calibrating a gas sensor comprising a luminescent compound having a luminescence lifetime that is quenched by a gaseous substance which uses a model of the relationship between the luminescence lifetime and the concentration of the gaseous substance that is modified by a calibration factor representing a proportion of the compound not being exposed to the gaseous substance, the method comprising: measuring values of the luminescence lifetime of the luminescent compound while the gas sensor is exposed to at least two known concentrations of the gaseous substance; and deriving the calibration factor from the measured values of the luminescence lifetime using the model. Also disclosed are a corresponding gas sensor apparatus for measuring the concentration of a gaseous substance in an environment, and method of measuring a concentration of a gaseous substance in an environment using a gas sensor.

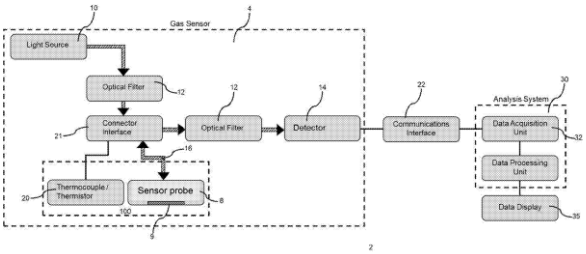

21: 2021/09744. 22: 2021/11/29. 43: 2023/04/11
51: A61K; C07K; C12N; G01N; A61P
71: JIANGSU HENGRUI MEDICINE CO., LTD., SHANGHAI HENGRUI PHARMACEUTICAL CO., LTD.
72: FU, Yayuan, MA, Xiaoli, GE, Hu, TAO, Weikang
33: CN 31: 201910480169.4 32: 2019-06-04
54: ANTI-CONNECTIVE TISSUE GROWTH FACTOR ANTIBODY AND APPLICATION THEREOF
00: -
Provided are an anti-CTGF antibody comprising variable regions of a light chain and a heavy chain and a use thereof as a drug. The antibody may be

used to prepare drugs for treating CTGF-related diseases or conditions.

21: 2021/09914. 22: 2021/11/30. 43: 2023/05/11
51: B09B; E04B; E04C
71: DUBE, Alexander Memory
72: DUBE, Alexander Memory
33: ZA 31: 2020/01401 32: 2020-08-31
54: CONTAINER DESIGNED FOR REUSE
00: -
The invention relates to a multiple use item in the form of a container. The container has a hollow body which includes one or more sealable openings to permit the filling and emptying of a packaged product into and from the container. In this example, the one or more sealable openings are in the form of a neck extending from a top of the body and are sealable with a cap which together forms an interlocking formation protrusion. The container also includes at least one interlocking formation comprising a recess on the bottom surface of the body for inter-engagement of the protrusion of the container within the recess of a similar adjacent container in use.

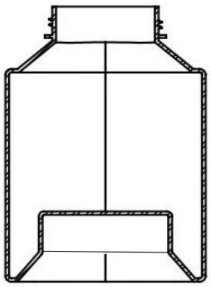

21: 2021/10041. 22: 2021/12/06. 43: 2023/03/15
51: A24B; A61K
71: PHILIP MORRIS PRODUCTS S.A.
72: MY LY LAO STAHL, HEIDI ZIEGLER BRUUN, BRUNO PROVSTGAARD NIELSEN, BINE HARE JAKOBSEN
33: DK 31: PA 2019 00698 32: 2019-06-07
33: DK 31: PA 2019 70610 32: 2019-09-30
33: DK 31: PA 2019 70612 32: 2019-09-30
33: DK 31: PA 2019 70611 32: 2019-09-30
54: NICOTINE POUCH PRODUCT
00: -
A nicotine pouched product is disclosed, the nicotine pouched product comprising a pouch composition and a pouch membrane enclosing the pouch composition, the pouch composition comprising at least one water-insoluble fiber, water in an amount of at least 15% by weight of the composition, and nicotine, wherein the pouch membrane comprises further nicotine in an amount of at least 15% by weight of a total content of nicotine in the pouched product.

21: 2021/10127. 22: 2021/12/08. 43: 2023/04/11
51: B41J
71: ZHUHAI PANTUM ELECTRONICS CO., LTD.
72: LI, Haixiong, XIONG, Dan
33: CN 31: 202011425780.6 32: 2020-12-08
33: CN 31: 202111325506.6 32: 2021-11-10
54: IMAGE FORMING CONTROL METHOD, CONSUMABLE CHIP, IMAGE FORMING APPARATUS, AND CONSUMABLE
00: -
Embodiments of the present disclosure provide an image forming control method, a consumable chip, an image forming apparatus, and a consumable. For the image forming control method, based on the environmental data, the encryption and decryption processing and transmission are performed on the preset compensation value of the image forming control parameter using the environmental data respectively detected by the consumable chip and the image forming apparatus. The preset compensation value is prevented from being intercepted and tampered during transmission, which makes data transmission more secure, thereby ensuring the printing and image forming quality.

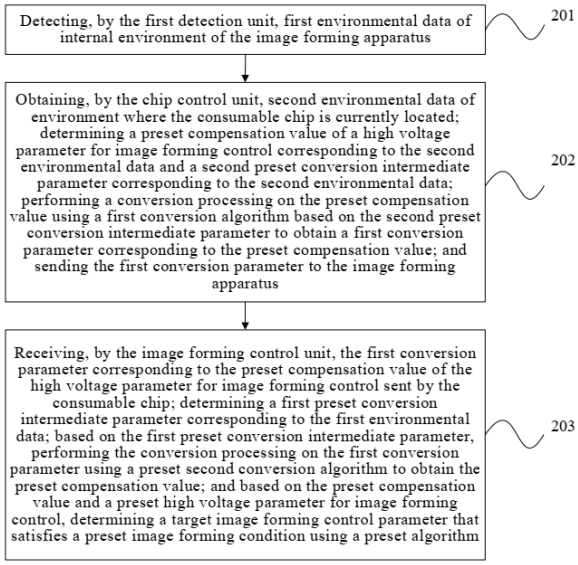

21: 2021/10216. 22: 2021/12/09. 43: 2023/04/11
51: H01B
71: RODRIGUEZ RÍOS, Borja, LÓPEZ GÓMEZ, Mariano
72: RODRIGUEZ RÍOS, Borja, LÓPEZ GÓMEZ, Mariano
54: SYSTEM FOR EXTRACTING ENERGY IN POWER CABLES FROM THE ELECTRIC FIELD
00: -
System for extracting electrical energy in power cables, from the electric field, without making electrical contact with the main conductors (101) of the cable (801), which comprises a power cable (606, 801) and an extraction device of energy from the electric field (408), which captures the electric field inside the power cable, with alternating or direct voltage, as shown in figure 7/25. This development also includes the device for extracting energy from the electric field (408). This development also includes the method of manufacturing the system for extracting energy from the electric field in power cables (701, 1301, 1701, 2401) and the device for extracting electric energy, from the electric field (408).

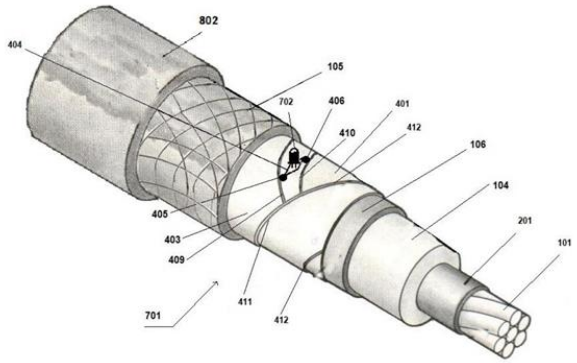

21: 2021/10256. 22: 2021/12/10. 43: 2023/03/16
51: A61F
71: Johnson & Johnson Consumer Inc.
72: CAU, Jose Francisco, ALKMIN, Marco Antonio, SARDINHA, Gilson Philigret
33: US 31: 62/479,812 32: 2017-03-31
54: FEMININE ABSORBENT ARTICLES WITH BONDED SIDE FLAPS AND AN APPARATUS FOR PRODUCING THE SAME
00: -
A disposable sanitary napkin includes a main body and a pair of bridged flaps. The main body includes an absorbent system, a topsheet, and a backsheet, and it has a pair of side edges extending along the length thereof. The bridged flaps include a first straight edge, a second, shape-cut edge defining a projecting portion, and a bridging segment of a release liner having at least one zone of adhesive configured for attachment to the projecting portion of each bridged flap. Each bridged flap is attached to the main body with the first, substantially straight edge of each shaped strip aligned with a corresponding side edge of the main body, the bridged flaps are disposed over the topsheet, and each side flap is releasable from the bridging segment of the release liner.

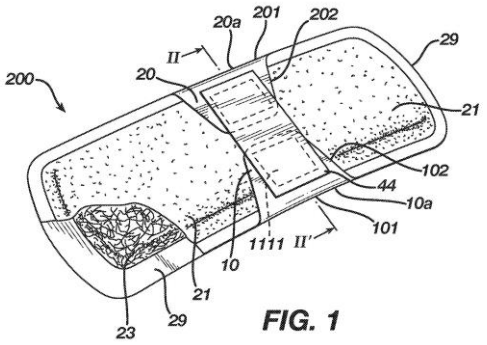

FIG. 1

21: 2021/10267. 22: 2021/12/10. 43: 2023/04/11
51: G06Q
71: PASCHINI, Miles, AGARWAL, Nitin
72: PASCHINI, Miles, AGARWAL, Nitin
33: US 31: 62/859,665 32: 2019-06-10
54: TOKENIZED ASSET BACKED BY GOVERNMENT BONDS AND IDENTITY AND RISK SCORING OF ASSOCIATED TOKEN TRANSACTIONS
00: -
A method for facilitating the exchange of a stable cryptocurrency collateralized by government-issued debt. First granularity parameters are received through a first wallet interface of a first digital wallet. A first restricted use key is generated based upon the first granularity parameters and provided to an owner of a second digital wallet. A second restricted use key is generated based upon second granularity parameters received through a second wallet interface associated with the second digital wallet. Information from a blockchain wallet is accessed using the second restricted use key wherein the information relates to one or more of an ID classification and risk score of the second wallet owner at a level of detail determined by the second granularity parameters. An indication to proceed with a transaction between the first digital wallet and the second digital wallet may then be received through the first wallet interface.

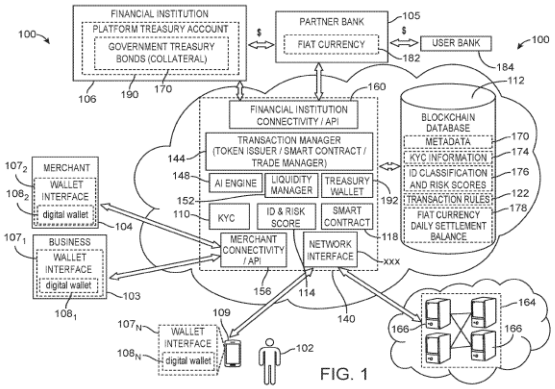

FIG. 1

21: 2021/10415. 22: 2021/12/14. 43: 2023/04/11
51: G06F; H04W
71: SNAPT, INC
72: BLAKEY, David Michael, TRENT, Mark Graeme, VAN DER SCHYFF, Willem Nicolaas
33: US 31: 62/865,091 32: 2019-06-21
54: CONTROL CONFIGURATION FOR A PLURALITY OF ENDPOINT DEVICES
00: -
There is provided a system and method for controlling a plurality of endpoint devices. Multiple connection requests, each connection request originating from an endpoint device are received by a server. Each endpoint device has a client interface thereat that generates the connection request as an outbound connection request from the endpoint device to the server computer. A persistent data communication session is established between the server computer and the client interface of each endpoint device. Command data is received to control one or more of the endpoint devices. The server computer generates a data packet including the command data and transmits the data packet via the persistent data communication session to the endpoint device, to enable the endpoint device instructions to be carried out by the endpoint device, and result data is then received by the server once the instructions are carried out.

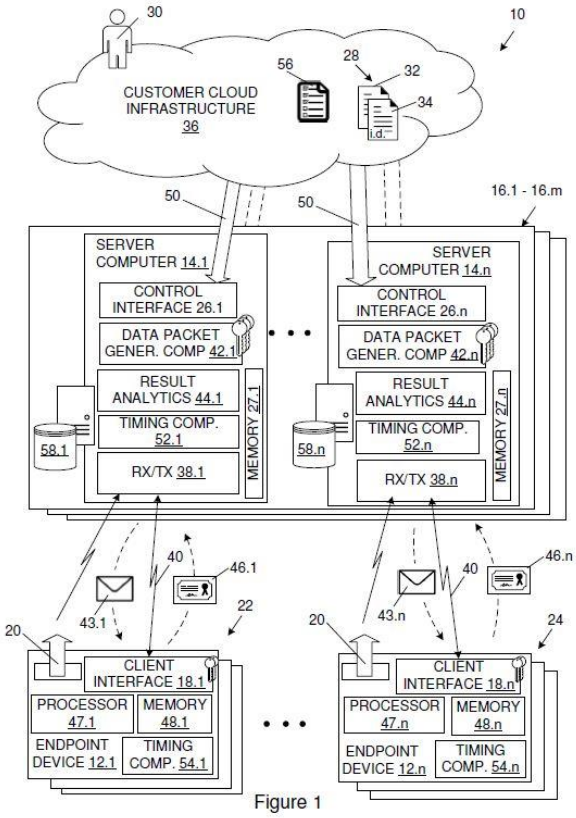

Figure 1

21: 2021/10886. 22: 2021/12/23. 43: 2023/03/22
51: A01H; C12N
71: BETTERSEEDS LTD
72: SHERMAN, TAL, MARGALIT, IDO, COREM, SHIRA
33: US 31: 62/854,036 32: 2019-05-29
54: CANNABIS PLANTS WITH IMPROVED YIELD
00: -
The present invention discloses a modified Cannabis plant exhibiting at least one improved domestication trait compared with wild type Cannabis, wherein the modified plant comprises at least one mutated Cannabis SELF PRUNING (SP) (CsSP) gene and/or at least one mutated Cannabis SELF PRUNING 5G (SP5G) (CsSPSG) gene. The present invention further discloses methods for production of the aforementioned modified Cannabis plant using genome modification.

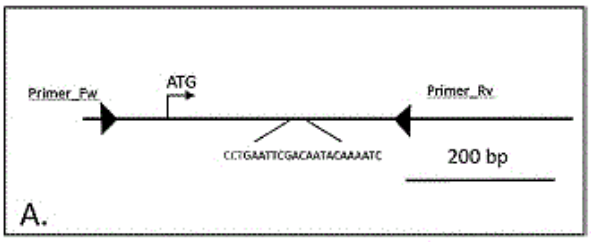

21: 2022/00386. 22: 2022/01/07. 43: 2023/04/11
51: B62D
71: LIEBHERR MINING EQUIPMENT NEWPORT NEWS CO.
72: BROWN, Joshua, BATES, Hunter
33: US 31: 62/859,984 32: 2019-06-11
33: US 31: 62/953,164 32: 2019-12-23
54: A SELF-LEVELING SINGLE AXLE DUMP TRUCK
00: -
A self-leveling single axle dump truck is provided, the truck comprising a frame, a dump body pivotably mounted on the frame, and a propulsion and self-leveling system comprising a single axle supporting the frame at least during motion of the self-leveling single axle dump truck, the single axle comprising at least a first and a second wheel and at least a first electric traction motor for driving the first wheel and a second electric traction motor for driving the second wheel.

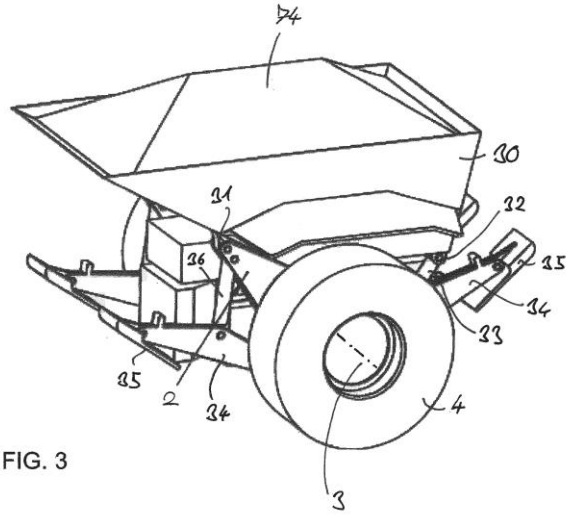

FIG. 3

21: 2022/01326. 22: 2022/01/27. 43: 2023/05/17
51: F42D
71: DETNET SOUTH AFRICA (PTY) LTD
72: MAURISSENS, Daniel Auguste

33: ZA 31: 2019/05911 32: 2019-09-09
54: ENERGY EFFICIENT WIRELESS DETONATOR SYSTEM
00: -
A blasting system which includes a plurality of detonators located in respective boreholes each detonator being capable of two-way communication, and wherein a signal from control equipment is relayed from one detonator to another and then to a target detonator.

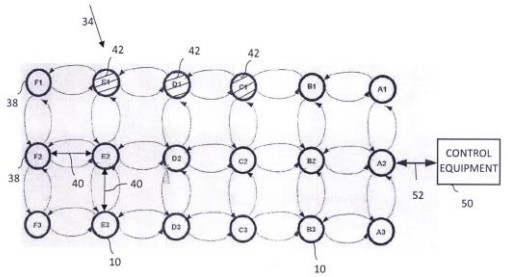

21: 2022/01421. 22: 2022/01/31. 43: 2023/05/08
51: A01K
71: Gia Tien NGO, Rohi SHALATI
72: Gia Tien NGO, Rohi SHALATI
33: DE 31: 10 2019 121 102.6 32: 2019-08-05
54: DEVICE AND METHOD FOR BREEDING, IN PARTICULAR FOR BREEDING INSECTS
00: -
The invention relates to a device (1) and to a method for breeding insects. The device (1) is characterized in that the device (1) comprises: at least one stack (3) of boxes (2), which is located on a chassis (4, 5), and a gantry (6), the gantry (6) at least having a supply module (10), a cleaning module (11), an upward vertical transport (12), a downward vertical transporter (13), an upper transverse transporter (14) and a lower transverse transporter (15); in that a guide system, in particular a rail guide (7), is provided for the gantry (6) such that the gantry (6) can be moved to the at least two stacks (3) of boxes (2); and in that a conveying system is provided, in particular a conveyor belt (8), it being possible to convey boxes (2) from and to the at least one stack (3) of boxes (2) by means of the conveying system such that, by means of the gantry (6), cyclical restacking is enabled and supplying and cleaning of the insects within the boxes (2), within the at least one stack (3), is enabled; and in that boxes (2) can be put into and removed from the at least two stacks (3) of boxes (2) by means of the conveying system and the gantry (6).

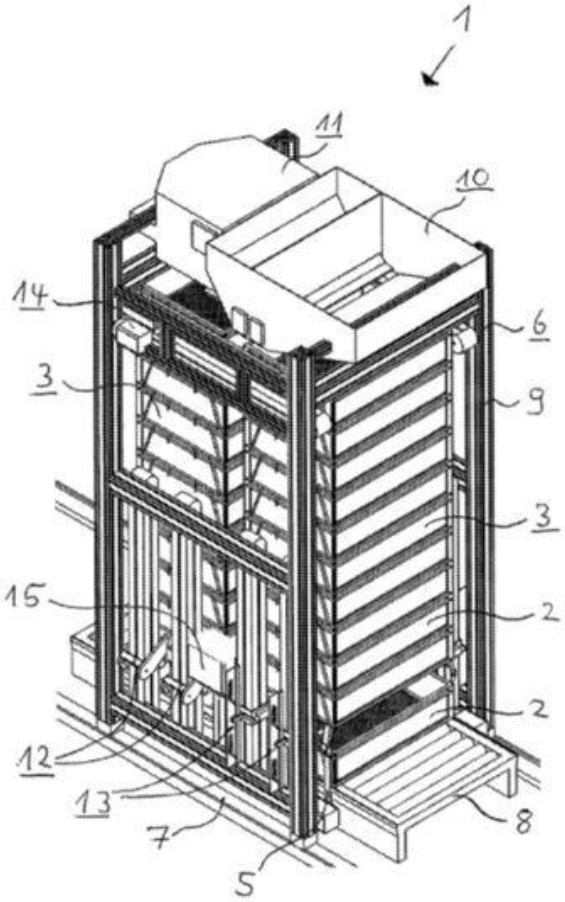

21: 2022/01422. 22: 2022/01/31. 43: 2023/04/11
51: F24S
71: DEUTSCHES ZENTRUM FÜR LUFT- UND RAUMFAHRT E.V.
72: EICKHOFF, Martin
33: DE 31: 20 2019 104 454.3 32: 2019-08-13
54: PARABOLIC TROUGH COLLECTOR MODULE, PARABOLIC TROUGH COLLECTOR MODULE UNIT, AND SOLAR THERMAL POWER PLANT
00: -
A parabolic trough collector module (1) comprising: an absorber tube (3) with a central axis (A); a parabolic reflector (5) which focuses solar radiation onto the absorber tube (3) and which comprises a reflector surface (7); and a stand device (9), on which the parabolic reflector (5) is pivotally mounted, the stand device (9) having at least one stand post (9a) and the absorber tube (3) being mounted on the stand post (9a), characterized in that, in the reflector

surface (7), the parabolic reflector (5) has a cut-out section (12) running perpendicularly to the longitudinal di-rection, and a support device (14) extends through the cut-out section (12) and has an absorber tube mount (20) that forms a linear guide, on which mount the absorber tube (3) is slidingly mounted in the longitudinal direction.

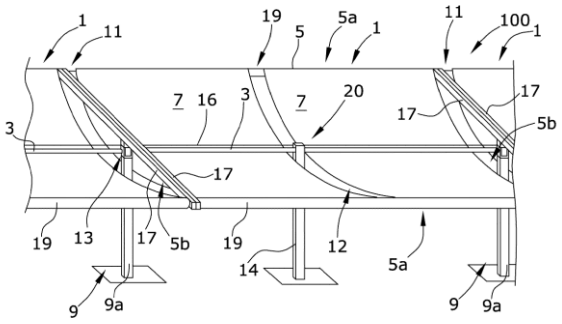

21: 2022/01541. 22: 2022/02/03. 43: 2023/03/23
51: A61K
71: BDR PHARMACEUTICALS INTERNATIONAL PRIVATE LIMITED
72: DHARMESH MAHENDRABHAI, SHAH, ARAVIND MANAPPA, BADIGER, BHAVESH NAGINBHAI, PATEL, RAKSHIT KETANBHAI, CHOKSI, MAYURKUMAR PURSHOTTAMBHAI, PATIL, JIGAR ATULKUMAR, SHAH, MADHAVKUMAR DILIPBHAI, TRIVEDI, VISHAL JAYANTILAL, THAKKAR, PRATIK ASHWINBHAI, VORA, NIRAV NATVARLAL, JADAV
33: IN 31: 201921028874 32: 2019-07-18
54: ORAL FORMULATIONS OF EDARAVONE AND METHOD OF MANUFACTURING THEREOF
00: -
The present invention relates to oral suspension dosage form of Edaravone. The invention also relates to provide patient-compliant, economical and technically advanced dosage form over existing marketed dosage form. Moreover, the solubility and stability of the patient compliant Edaravone formulation, prepared as per the present invention, is proven higher when compared to prior art inventions. Furthermore, the present invention also provides a suspension composition prepared by a process which is relatively simple, easy to commercially manufacture, and functionally reproducible.

21: 2022/01655. 22: 2022/02/08. 43: 2023/04/25
51: E05C; G06Q
71: RHONA MAT PROPERTIES CC
72: BRITS, Frederik Petrus Philippus
33: ZA 31: 2021/00613 32: 2021-01-28
54: LOCKING DEVICE WITH RENTAL REMINDER INDICATOR
00: -
A locking device for an access door of a building is provided, the locking device comprising an input receiving module to receive an access code to allow access to a user; a controller to actuate a lock to unlock the door, in response to a valid access code being entered or provided, and to determine the rental status of the building, including whether the rent has been paid or is imminent or is overdue or is in default; and a visual indicator to display the rental status of the building, so that if the rental status is in default, the controller will not unlock the door, thereby locking the user out of the building until the rent is paid. In an embodiment, the locking device includes a communication device to communicate with a remote controller that sends the rental status of the building to the locking device.

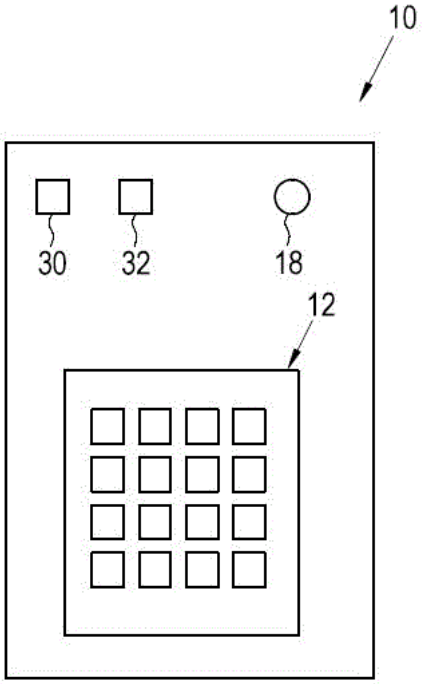

21: 2022/01903. 22: 2022/02/14. 43: 2023/03/24
51: B01D
71: Daimler Truck AG
72: SCHUMACHER, Eric
33: DE 31: 10 2019 004 926.8 32: 2019-07-15

54: FLUID FILTER FOR A MOTOR VEHICLE AND FILTER CARTRIDGE FOR A FLUID FILTER OF THIS KIND
00: -
The invention relates to a fluid filter (10) for a motor vehicle, having a filter cartridge (12), which is fixed on a filter housing (14) of the fluid filter (10). The filter cartridge (12) has a receiving space (18), in which a filter material is disposed. The filter cartridge (12) is connected to the filter housing (14) by rotating the filter cartridge (12) about the longitudinal axis (28) thereof. On an end plate (20) of the filter cartridge (12), a retaining element (24) is arranged, having a ridge (30) that protrudes from a wall (26) of the retaining element (24). When viewed from above in the direction of the longitudinal axis (28), the wall (26) of the retaining element (24) is spiral-shaped. When the filter cartridge (12) is in a mounted position, the ridge (30) of the retaining element (24) engages behind a retaining ridge (28) of a counter-bearing (36), which is arranged on the filter housing (14) and, when viewed from above in the direction of the longitudinal axis (28), is spiral-shaped. The invention also relates to a filter cartridge (12) for a fluid filter (10) of this kind.

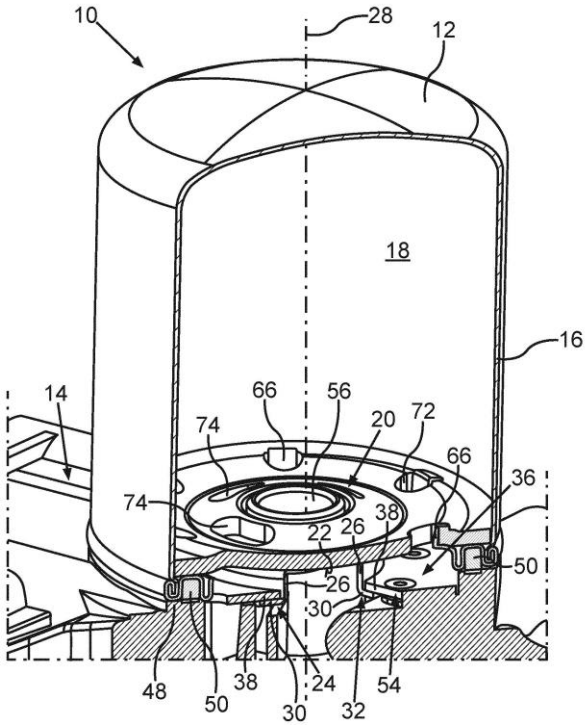

21: 2022/02233. 22: 2022/02/22. 43: 2023/03/23
51: B65D
71: Illinois Tool Works Inc.
72: SAMARAS, Christopher J., SLOVIK, Rachell L.
33: US 31: 62/925,068 32: 2019-10-23
54: CONTAINER CARRIER
00: -
A container carrier (100) with a uniform pitch applicating feature for applying container carriers onto containers to form a multipackage. A uniform series of apertures (112) is formed on the container carrier in the machine direction of a multipack carrier. Application machines may use the apertures for synchronizing the container carrier material to the containers, thereby making it container pitch independent. The resulting internal features of the carrier that would receive the containers can then be varied to best match the containers with little to no impact to the application machine.

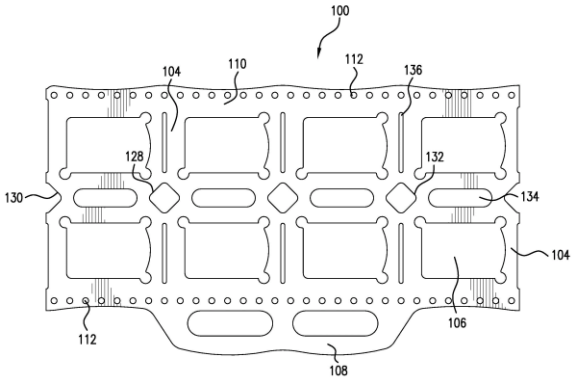

FIG.1

21: 2022/02310. 22: 2022/02/23. 43: 2023/04/11
51: E02D; E04H
71: GUARDIAR EUROPE BVBA
72: MESSELIS, Timothy
33: GB 31: 1907963.1 32: 2019-06-04
54: SECURITY FENCING
00: -
A security fence panel comprising mutually confronting security mesh sheets which in use are spaced apart, the security mesh sheets being connected by intermediate sheets wherein in use the intermediate sheets are inclined to the horizontal and extend across the space between the confronting security mesh sheets.

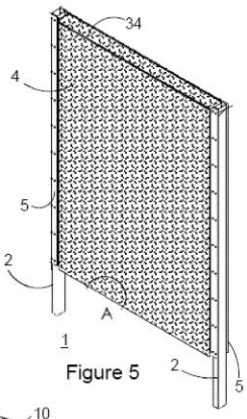

Figure 5

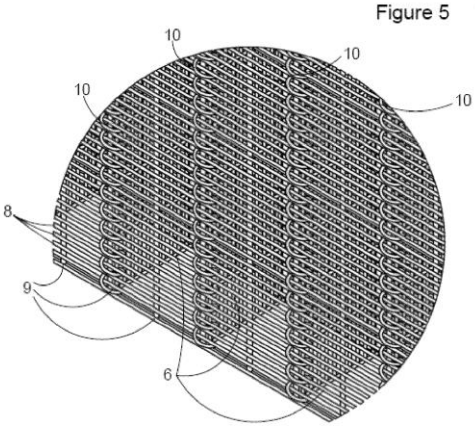

Figure 5A

21: 2022/02323. 22: 2022/02/23. 43: 2023/03/23
51: B66C; B66F; F16B
71: BRANDSAFWAY SERVICES, LLC
72: GRUMBERG, MATHIEU
33: US 31: 62/882,378 32: 2019-08-02
54: ROTATING SUSPENSION POINT FOR USE WITH CONCRETE ANCHORS
00: -
A rotating suspension point assembly permits rotation and other movement of the assembly relative to the axis of an anchor to which it is attached. Such a rotating suspension point assembly comprises a base, a flanged bushing and a mating convex washer. The base has a plate and a tubular structure projecting from the plate. The flanged bushing has an internal clearance to allow misalignment of an anchor and has a flange with a concave surface. The mating convex washer is aligned with the concave surface of the flanged bushing.

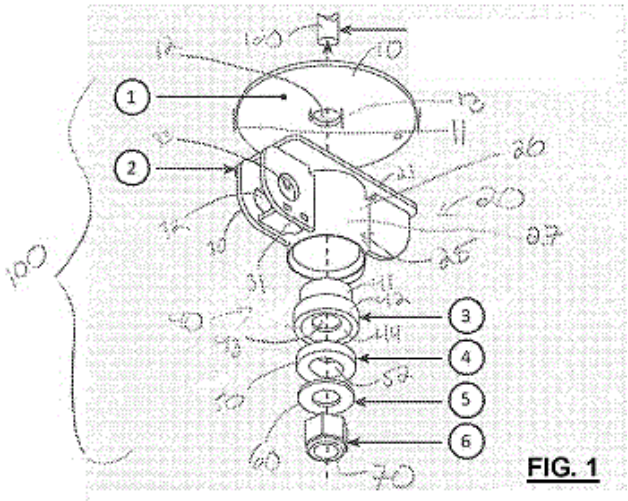

21: 2022/02429. 22: 2022/02/25. 43: 2023/03/17
51: G01N; G06F; G16B
71: SomaLogic Operating Co., Inc.
72: TABACMAN, Eduardo Daniel, ZICHI, Dominic Anthony, WESTACOTT, Matthew Joel, PERRY, Darryl John
33: US 31: 62/880,791 32: 2019-07-31
54: METHOD, APPARATUS, AND COMPUTER-READABLE MEDIUM FOR ADAPTIVE NORMALIZATION OF ANALYTE LEVELS
00: -
A method, apparatus, and computer-readable medium for adaptive normalization of analyte levels in one or more samples, the method including receiving one or more analyte levels corresponding to one or more analytes detected in the one or more samples, and iteratively applying a scale factor to the one or more analyte levels over one or more iterations until a change in the scale factor between consecutive iterations is less than or equal to a predetermined change threshold or until a quantity of the one or more iterations exceeds a maximum iteration value, determining the scale factor based at least in part on analyte levels that are within a predetermined distance of their corresponding reference distributions; and normalizing the one or more analyte levels by applying the scale factor.

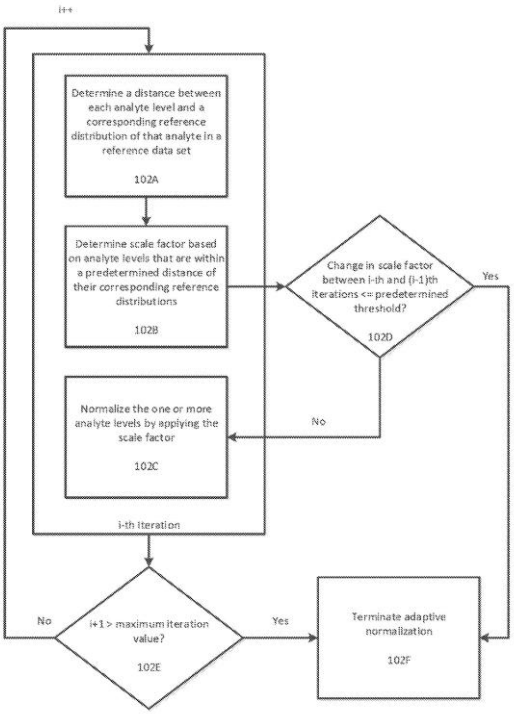

21: 2022/02568. 22: 2022/03/02. 43: 2023/05/16
51: G06Q
71: BOSMAN, Philippus Johannes
72: BOSMAN, Philippus Johannes, BOSMAN, Franita
33: ZA 31: 2019/05180 32: 2019-08-06
54: METHOD AND SYSTEM OF OPTIMIZING STOCK AVAILABILITY AND SALES OPPORTUNITY
00: -
A method and system of optimizing stock availability and sales opportunity of a trader which includes defining key performance areas of stock availability indicators and influencers, defining target stock influencer and indicator values, retrieving raw sales and stock data, converting the data, calculating a sales opportunity by comparing actual stock influencer values with the target stock influencer values, defining a model performance, calculating an actual performance of the trader, and comparing the actual performance to the model performance, and in the event of underperformance, reporting to the trader, an adjustment of values to achieve the model performance in order to increase a rate of sale and improve the sales opportunity thereby providing the trader with an optimal stock replenishment number.

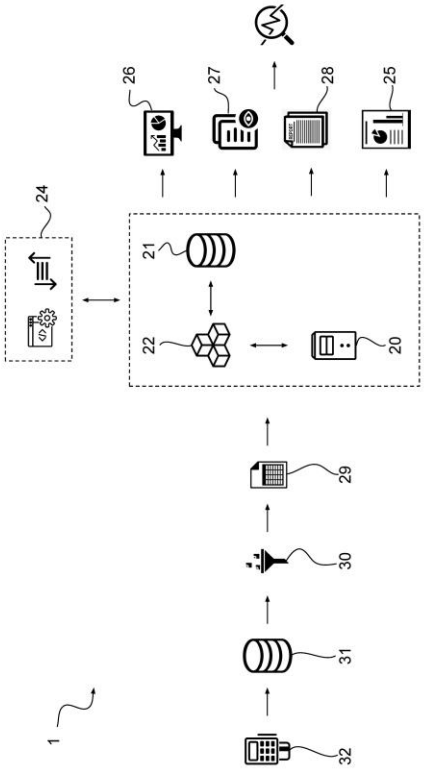

Figure 1

21: 2022/02571. 22: 2022/03/02. 43: 2023/03/17
51: A61K A61P
71: AEON BIOPHARMA, INC.
72: BROOKS, Gregory, F., CARTER, Eric
33: US 31: 62/897,520 32: 2019-09-09
33: US 31: 62/950,794 32: 2019-12-19
54: NEUROTOXIN COMPOSITIONS FOR USE IN TREATING GASTROPARESIS
00: -
Disclosed herein are compositions and methods for use in treating gastroparesis.

21: 2022/02572. 22: 2022/03/02. 43: 2023/03/23
51: B65D
71: BIO-LAB, INC.
72: SAYRE, Curtis, SWANSON, Anjelica, WEBER, John, WOOTEN, Jordan
33: US 31: 62/883,146 32: 2019-08-06
54: LIQUID PODS FOR RECIRCULATING WATER SYSTEMS
00: -
Disclosed herein is a liquid pod comprising a liquid composition comprising at least two of a Solvent A, a Solvent B, an Active, a Modifier, and an Adjuvant, wherein the water treatment liquid composition is disposed within a packet comprising a water-soluble polymer film.

21: 2022/02623. 22: 2022/03/03. 43: 2023/03/07
51: A01M; F21V; F21Y
71: GARDNER MANUFACTURING COMPANY, INC.
72: JONES, TIMOTHY M, STUDER, BRUCE R
33: US 31: 16/825,105 32: 2020-03-20
33: US 31: 16/733,277 32: 2020-01-03
54: LED LAMP FOR INSECT TRAP
00: -
Problems associated with the use of fluorescent tubes in insect traps are resolved by providing a replacement lamp employing multiple sets of light emitting diodes that each emit light at different specific wavelengths each positioned within a translucent sleeve have a surface coated with an environmentally safe light diffusion material creating a pattern on the surface comprising areas of more intense light dominated by the light cast by a single LED separated by areas of less intense light where light cast by adjacent LEDs is more mixed.

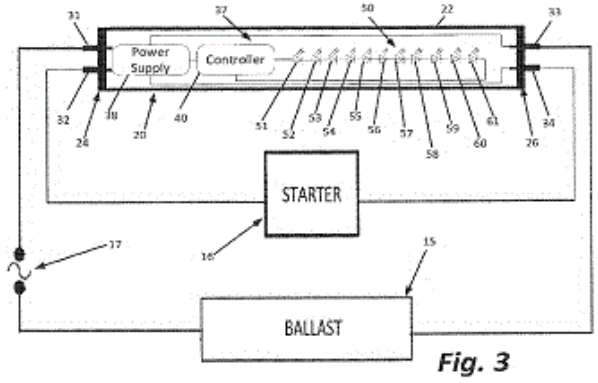

Fig. 3

21: 2022/02672. 22: 2022/03/04. 43: 2023/03/23
51: A61K; A61P
71: VETOQUINOL SA
72: KANIKANTI, VENKATA-RANGARAO, HEEP, IRIS, FELDHUES, ELISABETH, SIEGEL, DAVID, PETRY, GABRIELE
33: EP 31: 19191727.7 32: 2019-08-14
54: COMPOSITIONS COMPRISING TIGOLANER FOR CONTROLLING PARASITES
00: -
The present invention relates to a composition comprising tigolaner and, optionally endoparasiticidal agents, a method for its manufacture and its use as a medicament for controlling parasites.

21: 2022/02968. 22: 2022/03/11. 43: 2023/05/11
51: A61L; G07C
71: SIHLONGONYANE, Nokuthula Ntombenhle Pretty-girl
72: SIHLONGONYANE, Nokuthula Ntombenhle Pretty-girl
33: ZA 31: 2020/03490 32: 2020-12-11
54: SANITISATION AND DATA COLLECTION UNIT
00: -
The invention relates to a sanitisation unit for eliminating harmful pathogens on a subject who has been identified by the collection of data by the unit. The unit includes a sanitisation zone having an entry and exit point which is normally barred, for inhibiting uncontrolled entry and exit of the sanitisation zone. The unit also includes a reservoir connected to the sanitisation zone which contains a sanitising agent that is dispensed to sanitise the subject. The unit further has a plurality of sensors mounted at the entry point for collecting information from the subject which are to identify the subject. The unit has an alarm system which is triggered when the sensors detect an irregularity in the subject within the sanitisation zone.

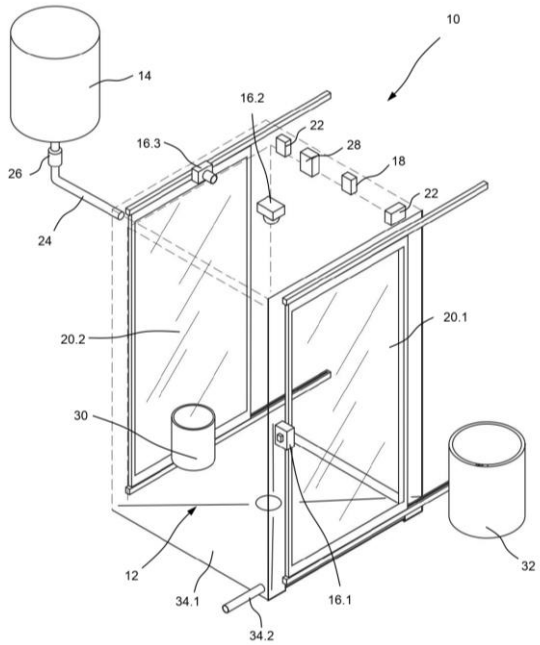

21: 2022/03215. 22: 2022/03/17. 43: 2023/05/08
51: B65G
71: AMOVA GMBH

72: Ronald, Johannes VAN DER MEER, Patrick BOL, Volker BRÜCK, Carsten HEIDE, Bernd KLEIN
33: DE 31: 10 2019 134 527.8 32: 2019-12-16
54: DEVICE FOR STORING STANDARDIZED STORAGE GOODS IN A HIGH-BAY WAREHOUSE
00: -
The invention relates to a device and a method for storing standardized storage goods in a high-bay warehouse and to the transfer thereof.

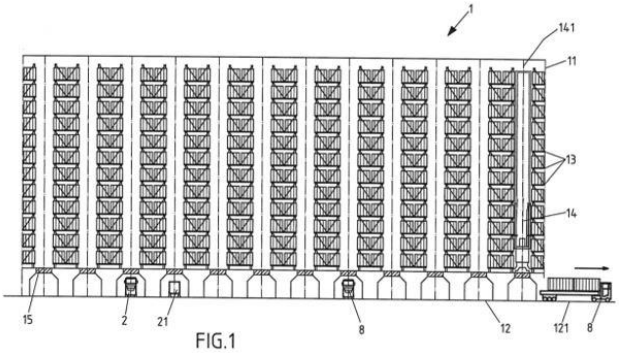

FIG.1

21: 2022/03253. 22: 2022/03/18. 43: 2023/05/08
51: G01N
71: UNIVERSAL BIOSENSORS PTY LTD
72: Stanley ZHEN-JIN, Peter Michael NEWMAN, Ronald Christopher CHATELIER, Luke Robert COSSINS, Alastair M. HODGES
33: US 31: 62/908,561 32: 2019-09-30
54: ELECTROCHEMICAL SENSOR FOR ANALYSIS OF BEVERAGES
00: -
The invention disclosed herein relates to a dry sensor for measuring the concentration of an analyte in a liquid beverage sample. Described herein is a novel dry sensor which is able to receive a liquid sample and adjust the pH of the liquid to be suitable for assaying an analyte of interest without the need to add reagents to the sample and/or to perform manually timed operations and able to detect a redox reaction in the presence of a liquid sample. The meter disclosed herein, when connected to the sensor disclosed herein is able to adjust the temperature of the liquid to be suitable for the assay, apply a series of potentials, measure the current at several times, measure the diffusion coefficient of the limiting electrochemical species, calculate the concentration of one or more analytes, and rapidly provide the user with the required information on the liquid sample.

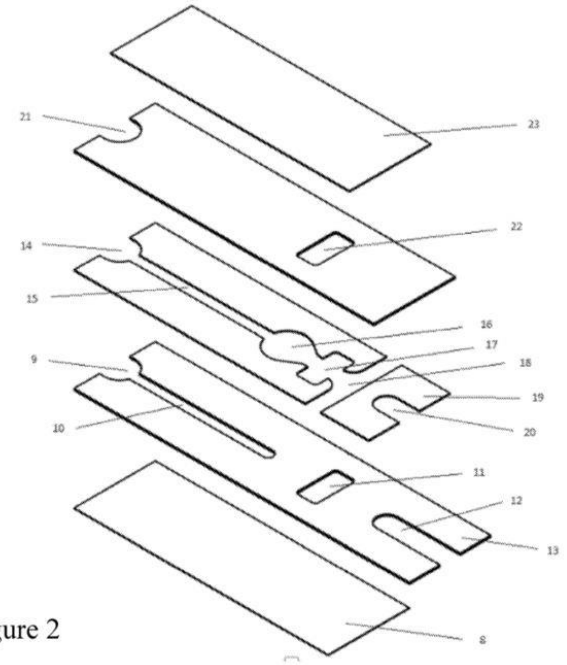

Figure 2

21: 2022/03450. 22: 2022/03/24. 43: 2023/05/08
51: H02S
71: BISHOP ASCENDANT, INC
72: BISHOP, Justin
33: US 31: 62/922,731 32: 2019-08-26
33: US 31: 16/994,424 32: 2020-08-14
54: INTEGRATED SYSTEMS OF A MODULAR SUPPORT SYSTEM
00: -
A modular support system includes a central core and operation modules arranged radially around the central core. A first operation module is configured to receive water to be treated. A second operation module is disposed under the first operation module and is configured to receive the water and to perform a first type of water treatment. A third operation module is disposed under the second operation module and is configured to receive the water and to perform a second type of water treatment that is different from the first type of water treatment. A fourth operation module is disposed under the third operation module and is configured to receive and store the water for usage.

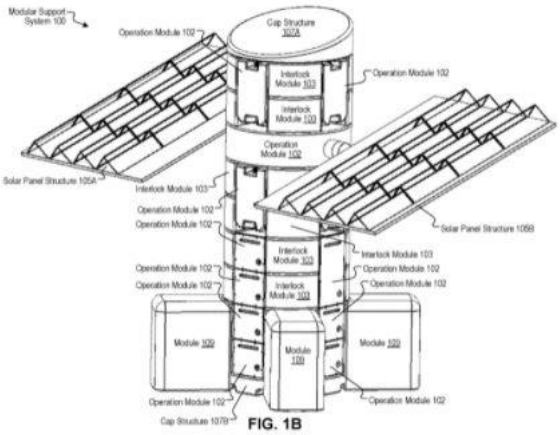

FIG. 1B

21: 2022/03727. 22: 2022/03/31. 43: 2023/04/18
51: B21B; C23G; C25F
71: ARCELORMITTAL
72: Alexey KOLTSOV, Patrice ALEXANDRE, Marie-Christine THEYSSIER
54: ELECTRO-ASSISTED PICKLING OF STEEL
00: -
This invention relates a pickling process of a metallic strip comprising the steps oh - passing said metallic strip through at least a pickling bath being at a temperature between 1 and 100°C, - applying an alternating current, having a current density of 1x102 to 1x105 A.m-2 of unit surface of said metallic strip to said metallic strip passing through said at least one pickling bath.

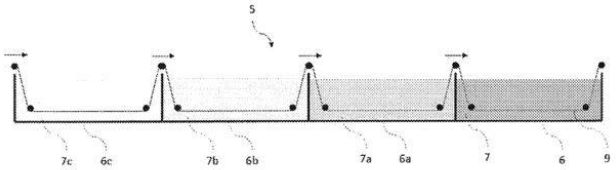

21: 2022/03998. 22: 2022/04/06. 43: 2023/05/10
51: B02C
71: CONSOLIDATED WASTE (PTY) LTD
72: Paul Mouton
54: A DEVICE FOR DECREASING AN OBJECT
00: -
The invention relates to a device for decreasing an object, more specifically but not exclusively, a device for decreasing an object to be recycled which comprises a body which includes a receiving zone for receiving the object to be decreased, a decreasing means associated with the body for decreasing the object received in the receiving zone into a decreased object and/or fragments and a displacement means for displacing the decreased object and/or fragments away from the decreasing means towards a dispensing zone, whereas the size of the fragments of the object are regulated by the decreasing means and whereas the fragments of the object are dispensed form the dispensing zone.

21: 2022/04154. 22: 2022/04/12. 43: 2023/05/08
51: A62C; B65D
71: UNITED INITIATORS GMBH
72: Iris NAGL, Sven GUTEWORT, Agnes UHL, Dominik HERMANN
33: DE 31: 10 2020 201 219.9 32: 2020-01-31
54: TRANSPORTING AND STORAGE CONTAINER FOR PEROXIDES
00: -
The invention relates to a packaging unit for the transport and/or storage of at least one organic peroxide, which is designed to ensure improved storage and transport safety of organic peroxides.

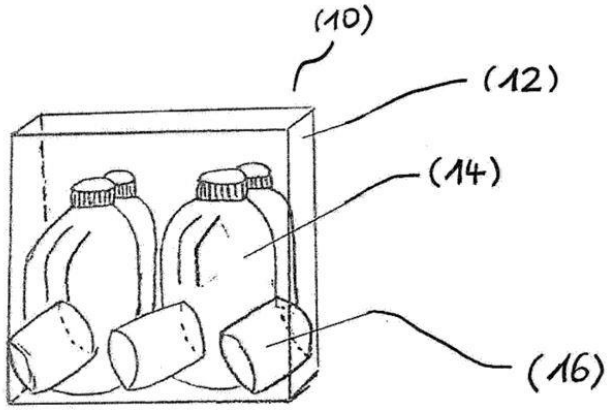

21: 2022/04422. 22: 2022/04/20. 43: 2023/03/23
51: A61K; C07K
71: BEIGENE, LTD.
72: LIU, Ye, JIANG, Beibei, SONG, Xiaomin
33: CN 31: PCT/CN2019/120033 32: 2019-11-21
54: METHODS OF CANCER TREATMENT USING ANTI-OX40 ANTIBODIES IN COMBINATION WITH ANTI-TIGIT ANTIBODIES
00: -
Provided are methods of treating cancer or increasing, enhancing, or stimulating an immune response with non-competitive, agonist anti-OX40 antibodies and antigen-binding fragments thereof that bind to human OX40 (ACT35, CD134, or TNFRSF4), in combination with an anti-TIGIT antibody or fragment thereof.

21: 2022/04743. 22: 2022/04/28. 43: 2023/03/17
51: G06Q
71: Jio Platforms Limited
72: GARANI, Pradeep, JAIN, Nimish, KAMBHAM, Sunitha, CHEPURI, Pavan Kumar
33: IN 31: 202121014781 32: 2021-03-31
54: SYSTEM AND METHOD FOR SECURE AND CONTACTLESS FUND TRANSFER IN OPEN AND CLOSED LOOP TRANSACTIONS
00: -
The present invention relates to a system for transfer of fund from a user to an entity. The user may be associated with a user computing device and the entity may be associated with an entity device. The entity device may include a secure element embedded within the entity device such that the secure element may enable short range communication with the user computing device or physical card for a secure and contactless fund transfer. The system may include a simple and convenient mode of the contactless fund transfer such as, for example, a tap-to-x transaction model, tap-to-pay for fund transfer, and tap-to-go for transit/access. Each operation pertaining to the fund transfer may be processed through the entity device that ultimately connects to a service provider. The secure element enables the fund transfer to be secure, authentic and confidential.

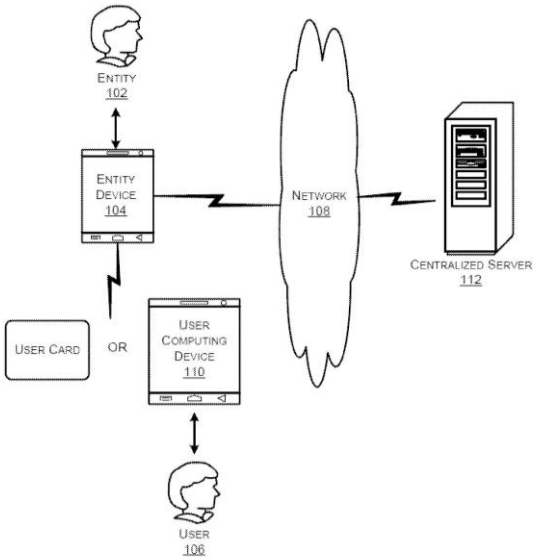

21: 2022/04747. 22: 2022/04/28. 43: 2023/03/24
51: A61K
71: KemPharm, Inc.
72: GUENTHER, Sven, CHI, Guochen, MICKLE, Travis
33: US 31: 16/667,807 32: 2019-10-29
54: D-AMPHETAMINE COMPOUNDS, COMPOSITIONS, AND PROCESSES FOR MAKING AND USING THE SAME
00: -
Disclosed are d-amphetamine compounds and compositions comprising at least one organic acid covalently bound to d-amphetamine, having the structure of or, a salt thereof, a derivative thereof, or a combination thereof. Methods of making and using the same are also disclosed.

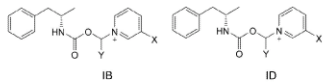

FIG. 1.

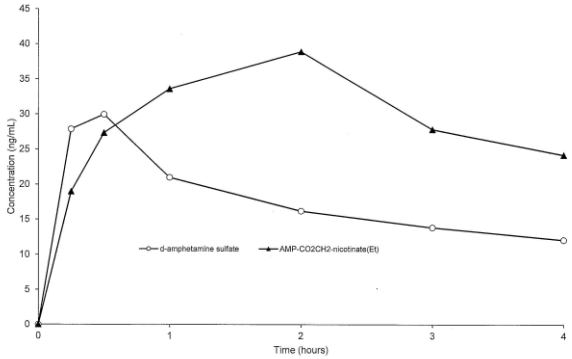

21: 2022/04846. 22: 2022/05/03. 43: 2023/05/10
51: E21F
71: ABC CANADA TECHNOLOGY GROUP LTD
72: FISHER, THOMAS, SCHULTE, MICHAEL, YAUSIE, LEIGH, SOMANAH, DHANESH, RYCE, DERRICK, MELROSE-WYATT, JORDAN
54: SEMI-RIGID DUCT SYSTEM
00: -
A duct system is formed from a plurality of tubular sections each formed from a flexible panel with tapering sides. Inner and outer joiner plates are attached to one side edge and the second side edge is inserted in the recess between the plates and fastened such that each section has a first open end and a second slightly larger open end. Anchors are spaced around each end of each tubular section. The first end of each tubular section is inserted into the larger second end of an adjacent tubular section and an end pulling element is connected between the anchors on adjacent sections an operated to

draw the connected first and second anchors together to make a substantially air tight seal between the tubular sections.

21: 2022/04983. 22: 2022/05/06. 43: 2023/05/10
51: A61K; C07K; C12N
71: NORTHWESTERN UNIVERSITY, MANNIN RESEARCH INC.
72: QUAGGIN, Susan E., RYCZKO, Michael C., RIPKA, Amy S.
33: US 31: 62/931,686 32: 2019-11-06
54: INHIBITION OF THE VE-PTP PHOSPHATASE PROTECTS THE KIDNEY FROM ISCHEMIA-REPERFUSION INJURY
00: -
This disclosure relates to inhibition of the VE-PTP phosphatase to protect the kidney from ischemia-reperfusion injury. This disclosure also relates to conditional knockout of VE-PTP to protect or improve the renal function in ischemia-reperfusion injury. This disclosure identifies VE-PTP as a promising therapeutic target for renal protection in ischemia-reperfusion injury and proposes using small molecule VE-PTP inhibitor to bestow protection in the context of acute kidney injury.

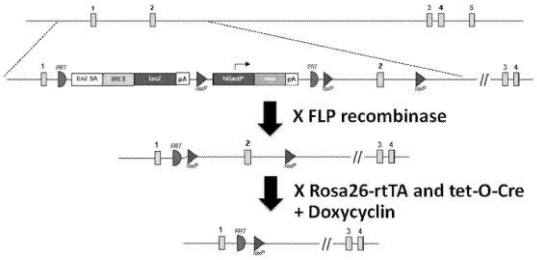

21: 2022/05546. 22: 2022/05/19. 43: 2023/03/23
51: A61K
71: Alopexx, Inc.
72: WYAND, Michael, SWISS, Gerald F.
33: US 31: 62/939,331 32: 2019-11-22
54: METHODS FOR PROVIDING CONTINUOUS THERAPY AGAINST PNAG COMPRISING MICROBES
00: -
Disclosed are antimicrobial vaccines comprising oligosaccharide β-(1→6)-glucosamine groups.

21: 2022/05605. 22: 2022/05/20. 43: 2023/03/22
51: A61K; A61P; A61Q
71: Datum Dental Ltd.
72: ZUBERY, Yuval, GOLDLUST, Arie, BAYER, Thomas
54: A COLLAGEN-HYDROXYAPATITE DEVICE FOR NON-SURGICAL PERIODONTAL TREATMENT
00: -
This invention provides a non-surgical method for treating periodontitis comprising administering an article into a periodontal pocket, where the article comprises crosslinked collagen and hydroxyapatite. This invention also provides articles to be used within these methods.

21: 2022/06066. 22: 2022/05/31. 43: 2023/03/16
51: B64G; F02K
71: ThrustMe
72: RAFALSKYI, Dmytro, MARTÍNEZ MARTÍNEZ, Javier, ZORZOLI ROSSI, Elena
33: EP(FR) 31: 19306560.4 32: 2019-12-03
54: COLD GAS THRUSTER WITH SOLID PROPELLANT
00: -
The invention relates to a space cold gas thruster operating with a solid propellant. The cold gas thruster of the invention comprises a tank (1) suitable for containing a solid propellant and a tank (1) heating device suitable for sublimating said solid propellant and forming gaseous propellant, the tank (1) having an aperture (7) for transferring said gaseous propellant outside said tank (1), such as a nozzle (7). The invention also relates to a process for determining the amount of remaining propellant in the propellant tank (1) of a cold gas thruster of the invention.

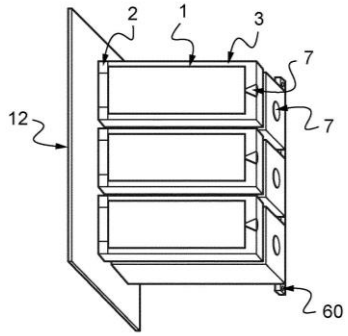

21: 2022/06128. 22: 2022/06/01. 43: 2023/03/24
51: H02H

71: PYLON TECHNOLOGIES, CO., LTD
72: WANG, Hongxing, SHI, Lu, LI, Fanjun, YAO, Bin
33: CN 31: 201911365101.8 32: 2019-12-26
33: CN 31: 201922379646.6 32: 2019-12-26
54: POWER-ON/OFF CIRCUIT FOR BATTERY MANAGEMENT SYSTEM
00: -
A power-on/off circuit for a battery management system, comprising a drive signal input end (VLSP), a power-on drive signal output end (On_Aux_Pwr), a power supply end (DC_IN+, DC_IN-), a power supply signal extraction circuit (100), a trigger circuit (200) and a switch (300). The drive signal input end (VLSP) is connected to the power-on drive signal output end (On_Aux_Pwr) by means of the switch (300); the power supply signal extraction circuit (100) is connected to the power supply end (DC_IN+, DC_IN-) and is used for outputting a control signal on the basis of a power supply signal connected to the power supply end (DC_IN+, DC_IN-); and the trigger circuit (200) is electrically connected to the power signal extraction circuit (100), and the trigger circuit (200) is used for controlling the switch (300) to be turned on or off according to the transition of the control signal. The power-on/off circuit receives, by means of the trigger circuit (200), a power-on or power-off signal output by the power supply signal extraction circuit (100), thereby implementing unified management of power-on/off signals. The power-on/off circuit is easy to expand, and has strong reusability.

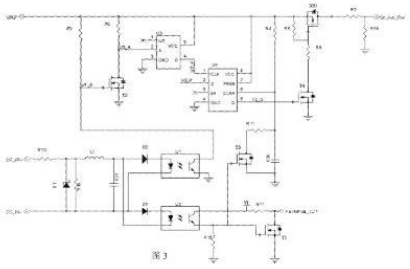

21: 2022/06180. 22: 2022/06/02. 43: 2023/03/17
51: A61B; A61L
71: Trustees of Tufts College
72: LEVIN, Michael, KAPLAN, David L., MURUGAN, Nirosha J.
33: US 31: 62/944,707 32: 2019-12-06
54: TISSUE REGENERATIVE MULTI-DRUG COCKTAIL AND APPARATUS FOR DELIVERY THEREOF
00: -
Disclosed are apparatus, compositions, and methods for promoting regeneration of tissue on a subject such as a wounded, damaged, or injured appendage, or within a subject such as a wounded, damaged, or injured organ. The disclosed apparatus, composition, and methods include or utilize wearable sleeves and regenerative compositions.

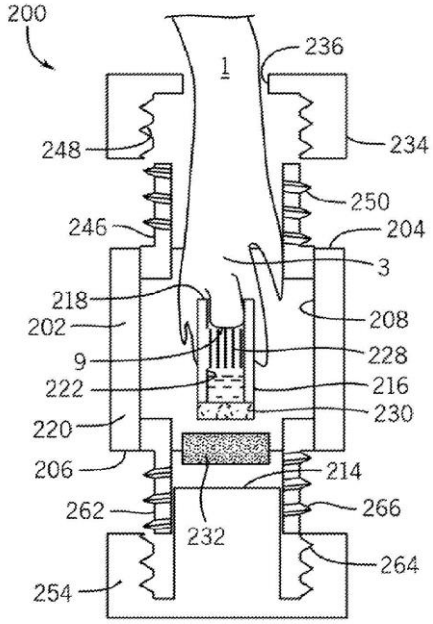

21: 2022/06282. 22: 2022/06/06. 43: 2023/04/18
51: B02C; B03C
71: GEOAGRO CONSULTORIA PROJETOS E SERVIÇOS LTDA.
72: ORLANDI PASSOS, Alexandre
33: BR 31: BR 10 2019 026219 2 32: 2019-12-11
54: SUSTAINABLE SYSTEM FOR PROCESSING FINE TAILINGS FROM MINING, LOW-HARDNESS MINERALS AND INDUSTRIAL, ELECTRONIC AND CONSTRUCTION WASTE, AND PRODUCTS OBTAINED THEREFROM
00: -
The invention relates to a sustainable system for processing fine tailings from mining, low-hardness minerals and industrial, electronic and construction waste, and products obtained therefrom, for application in the processing of fine tailings from mining, and also for the processing of low-hardness minerals and for the treatment of industrial, electronic and construction waste. This novel design

consists of the incorporation of technologies around high-efficiency grinding mills with circulation of hot gases that can raise the process temperature to values of up to 750°C, and pre-concentration systems. This solution makes it possible to improve the recovery of materials of interest, usually metals, and further to promote the pozzolanic activation of the remaining material. This activation will depend on the material and the temperature, and the parameters of the process will be defined taking into account the process and application requirements of the products.

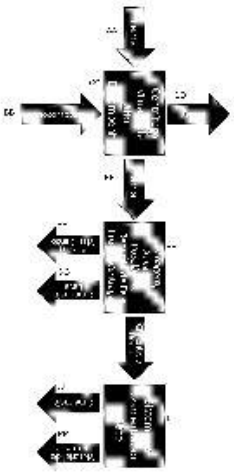

FIGURA 1

21: 2022/06601. 22: 2022/06/15. 43: 2023/04/18
51: G01D
71: 457 PROPERTIES 12 CC
72: MARAIS, Daniel Christoffel, PRIDGEON, Warren
33: ZA 31: 2021/01857 32: 2021-03-19
54: DEVICE AND SYSTEM FOR MONITORING AND REPORTING EQUIPMENT STATUS
00: -
This invention relates to a device 10 and a system 100 enabling the monitoring of a status of a powered equipment. The device 10 comprises a processing module 14, electrically connectable to a voltage source of the powered equipment for receiving a voltage input. The processing module 14 then generates status data reflecting the status from the voltage input received. The device further includes a memory arrangement 18 for storing the voltage input and/or the status data, and a wireless communication means 22 for transmitting the status data to a back-end 20 in network connection with the device 10. The back-end 20 receives the status data from the device 10, optionally generates secondary status data from the status data, and transmits the status data and/or the secondary status data for display on a user interface.

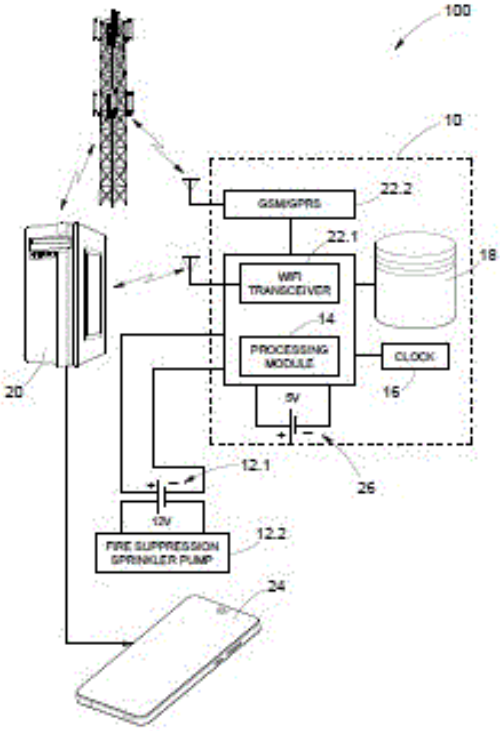

21: 2022/06743. 22: 2022/06/17. 43: 2023/04/18
51: A61K; A61P
71: MACROGENICS, INC.
72: Bradley James SUMROW, Ross LA MOTTE-MOHS, Jon Marc WIGGINTON, Ezio BONVINI, Paul A MOORE, Scott KOENIG, Xiaoyu ZHANG
33: US 31: 62/952,859 32: 2019-12-23
33: US 31: 62/952,878 32: 2019-12-23
33: US 31: 63/019,857 32: 2020-05-04
33: US 31: 63/021,556 32: 2020-05-07
33: US 31: 63/031,453 32: 2020-05-28
33: US 31: 63/123,581 32: 2020-12-10
54: THERAPY FOR THE TREATMENT OF CANCER
00: -
The present invention is directed to regimens for administering one or more Antibody-Based Molecules that bind PD-1 or PD-L1, and LAG-3 (e.g,

a PD-1 x LAG-3 bispecific molecule) alone, or in combination with an Antibody -Based Molecule that binds a Tumor Antigen (TA) for the treatment of cancer. The invention particularly concerns the use of such regimens in conjunction with PD-1 x LAG-3 bispecific molecules. The invention is directed to the use of such molecules, and to the use of pharmaceutical compositions and pharmaceutical kits that contain such molecules and that facilitate the use of such dosing regimens in the treatment of cancer.

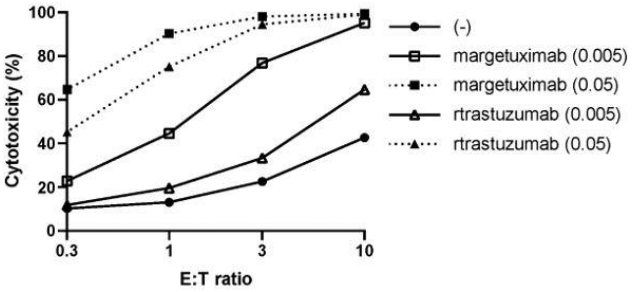

21: 2022/06882. 22: 2022/06/21. 43: 2023/04/18
51: A47G; C09J; D06N; E04F
71: I4F LICENSING NV
72: BOUCKÉ, Eddy Alberic
33: NL 31: 2024618 32: 2020-01-07
33: NL 31: 2026578 32: 2020-09-30
54: CARPET TILE, AND CARPET COVERING MADE OF SUCH CARPET TILES
00: -
Carpet tile which comprises - a base layer having a top side and a bottom side, wherein preferably pile yarns are provided on the top side of the base layer, and - a backing layer fixedly connected to the bottom side of the base layer, which backing layer constitutes a bottom surface of the carpet tile, wherein on the bottom surface of the carpet tile an adhesive is applied, and wherein the adhesive imparts adhesive properties to the bottom surface which are sufficient to allow the bottom surface to be attached to a suitable support surface, as well as to be detached from the same support surface onto which it has been attached previously.

21: 2022/06883. 22: 2022/06/21. 43: 2023/04/18
51: E04F
71: I4F LICENSING NV
72: BOUCKÉ, Eddy Alberic
33: NL 31: 2024630 32: 2020-01-09
33: NL 31: 2026579 32: 2020-09-30
54: GLUE-DOWN DECORATIVE FLOOR COVERING SYSTEM
00: -
The invention relates to a glue-down decorative floor covering system. The invention also relates to a glue-down floor covering realized by a plurality of tiles of the glue-down floor covering system according to the invention. The invention further relates to a tile for use in a glue-down floor covering system according to the invention.

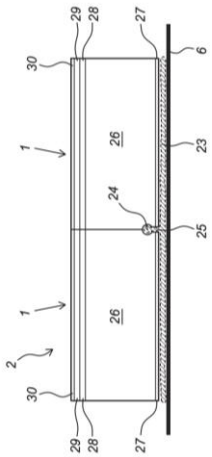

21: 2022/06902. 22: 2022/06/21. 43: 2023/04/18
51: A23J; A23K; A23L
71: FRAUNHOFER-GESELLSCHAFT ZUR FÖRDERUNG DER ANGEWANDTEN FORSCHUNG E. V.
72: Peter EISNER, Stephanie MITTERMAIER
33: DE 31: 10 2020 200 863.9 32: 2020-01-24
33: DE 31: 10 2020 201 598.8 32: 2020-02-10
54: METHOD FOR OBTAINING ONE OR MORE PROTEIN PREPARATIONS AND OIL FRACTIONS FROM SUNFLOWER SEEDS OR RAPE SEEDS
00: -
The invention relates to a method for obtaining one or more protein preparations and oil fractions from sunflower seeds or rape seeds. At least three fractions are provided or formed from the seeds, a first fraction of which has a shell content of < 1 mass.%, a second fraction of which has a shell content of < 20 mass.% or < 10 mass.%, the shell content of the second fraction being greater than the shell content of the first fraction but equaling at least > 0.3 mass.% or > 0.15 mass.%, and a third fraction of which has a shell content of > 60 mass.% or > 30

mass.%. Oil is separated from the first fraction up to a residual oil content of < 3 mass.% by means of one or more de-oiling steps, whereby one or more oil fractions and an oil-free first fraction are obtained as protein preparations. By virtue of the method, all of the fractions which are accumulated during the preparation of the sunflower seeds or rape seeds can be converted into ingredients which are as high-quality as possible for food applications, animal feed applications, energetic applications, or technical applications.

21: 2022/07008. 22: 2022/06/23. 43: 2023/04/11
51: G06Q; G16H
71: SALCIT TECHNOLOGIES PRIVATE LIMITED
72: VENKATA NAGA SRIPADA, Narayana Rao, JAIN, Manmohan, PALREDDY, ShubhaDeepti, VADREV, Srinivas Mukund, YECHURI, Venkat, YECHURI, Vamsi Priya, AVASARALA, Vardhan Seshasai
33: US 31: 17/081,149 32: 2020-10-27
54: A METHOD AND SYSTEM FOR MONITORING HEALTH RISK OF A USER
00: -
Disclosed herein is a method and system for monitoring health risk of a user. The system receives a plurality of information related to clinical symptoms and cough sounds of a user and determines a symptom risk index and a cough risk index based on analysis of clinical symptoms and cough sounds. The system further receives body temperature and oxygen saturation information of the user and determines temperature risk index and oxygen saturation risk index based on the analysis of the received body temperature and oxygen saturation information. The system further determines a final risk index of the user based on the determined symptom risk index, cough risk index, temperature risk index and oxygen saturation risk index. The system provides a quick and easy solution to estimate or predict health risk information of the user.

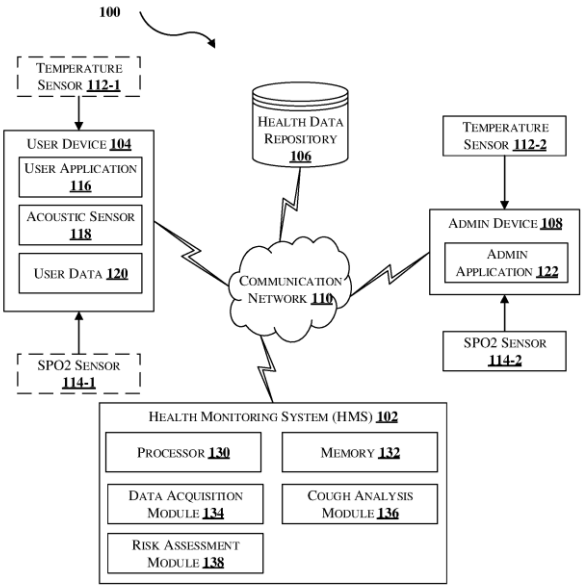

21: 2022/07058. 22: 2022/06/24. 43: 2023/04/18
51: A61K; A61P
71: TRB CHEMEDICA INTERNATIONAL SA
72: Demetrio MANENTI, Giuliana ABBIATI
33: IT 31: 102019000025126 32: 2019-12-20
54: USE OF HYALURONIC ACID DERIVATIVES IN THE REGENERATION OF BONE AND CARTILAGE TISSUES
00: -
The present invention relates to the use of derivatives between hyaluronic acid, heterocyclic compounds and naturally occurring amino acids in single, oligomeric or polymeric form for the treatment of skeletal diseases, in particular in the regeneration of bone and cartilage tissues.

21: 2022/07116. 22: 2022/06/27. 43: 2023/01/31
51: B21D; B29C
71: RIFENG ENTERPRISE (FOSHAN) CO., LTD, RIFENG ENTERPRISE GROUP CO., LTD, RIFENG TECHNOLOGY CO., LTD
72: CAO, Huijian, LIN, Xiyong, DIAO, Zhenbin, HE, Wangzhi
33: CN 31: 202022608653.1 32: 2020-11-12
54: PIPE FLARING DEVICE
00: -
A pipe flaring device. The pipe flaring device comprises: a mounting shell (100), a transmission mechanism (200), a flaring convex ring (300) and a guide-in mechanism (400), wherein the mounting shell is provided with a flaring cavity (110) for a pipe to be inserted therein; the guide-in mechanism is

located in the flaring cavity; the flaring convex ring is arranged outside the guide-in mechanism in a sleeved manner; the guide-in mechanism is connected to the transmission mechanism; the transmission mechanism is used for driving the guide-in mechanism to move in the flaring cavity; the guide-in mechanism is used for extending into the pipe; and the flaring convex ring is used for circumferentially abutting against an end opening of the pipe. According to the pipe flaring device, by using the flaring convex ring, circumferential uniform abutting against the end opening of the pipe is achieved, thereby ensuring the stress uniformity of the pipe during flaring.

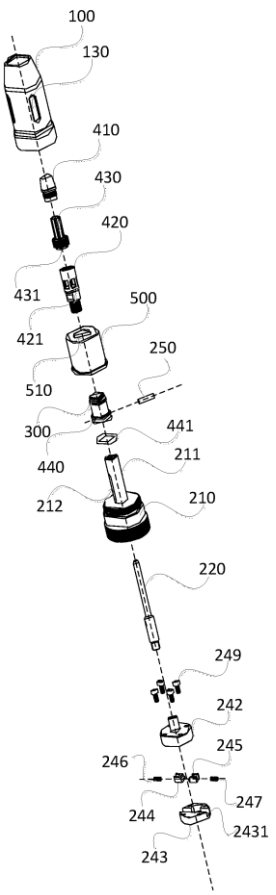

21: 2022/07234. 22: 2022/06/29. 43: 2023/03/16
51: A61K; A61P
71: LO, Hsu En
72: LO, Hsu En
33: CN 31: 201911241631.1 32: 2019-12-06
54: CHRONIC WOUND HEALING COMPOSITION AND APPLICATION THEREOF
00: -

A composition having a chronic wound healing effect, particularly diabetic wound healing; the composition is mainly composed of the following three components: (1) an anti-inflammatory agent, selected from a group consisting of acteoside, isoacteoside, and a combination thereof, (2) an astringent, selected from a group consisting of gallic acid, hypogallic acid, a salt thereof, and a combination thereof, and (3) a cooling agent, selected from a group consisting of borneol, menthol, and a combination thereof, the foregoing may be combined with one or more pharmaceutically acceptable carriers as needed. A use of the described composition in preparing a medicament for treating chronic wounds, particularly diabetic wounds.

21: 2022/07263. 22: 2022/06/30. 43: 2023/03/22
51: A61B; G01R
71: ECHOSENS
72: SANDRIN, LAURENT, AUDIERE, STÉPHANE
33: EP 31: 21305956.1 32: 2021-07-09
33: US 31: 17/371,790 32: 2021-07-09
54: ELASTOGRAPHY DEVICE AND METHOD
00: -
An elastography device includes a probe with a single ultrasound transducer (6); or a plurality of ultrasound transducers, and a low frequency vibrator (5) arranged to induce a displacement of said single ultrasound transducer or plurality of ultrasound transducers towards a tissue (8). The device is configured to emit a sequence of ultrasound pulses and to acquire echo signals received in response to track how elastic waves, induced by the displacement, travel in the tissue. The device is configured to generate, for one or more of the ultrasound pulses emitted a temporal offset upon emission (dt_{TX}), and/or a temporal offset upon reception (dt_{RX}), so that a difference thereof varies as a function of $2.d/v_{us}$, where d is the displacement of the single transducer or plurality of ultrasound transducers, and where v_{us} is the speed of ultrasound in said tissue.

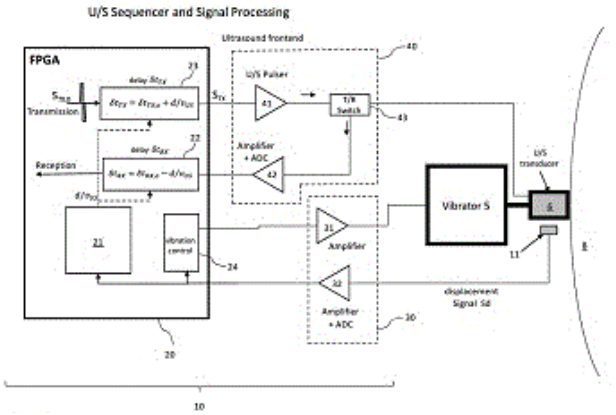

21: 2022/07459. 22: 2022/07/06. 43: 2023/02/02
51: E04H; G08B; H05C
71: NIBBOB (PTY) LIMITED
72: HEINRICH DRY
33: ZA 31: 2021/02248 32: 2021-04-06
33: ZA 31: 2021/07507 32: 2021-10-06
54: ALARM DEVICE FOR DETECTING INTERFERENCE
00: -
The invention provides an alarm device suitable for use on any object which is susceptible to unauthorised movement, such as a wire fence, door, generator, fridge, battery pack or the like. The alarm device comprises an independently-powered electronic unit which is releasable connectable to the object to create either a closed circuit or an open circuit depending on its installation; a motion-sensitive switch which is connected to the electronic unit, which detects unauthorised movement of the object and either interrupts the closed circuit or closes the open circuit; and signalling means which is operatively associated with the switch to actuate an alarm when the circuit status changes between a closed or open circuit.

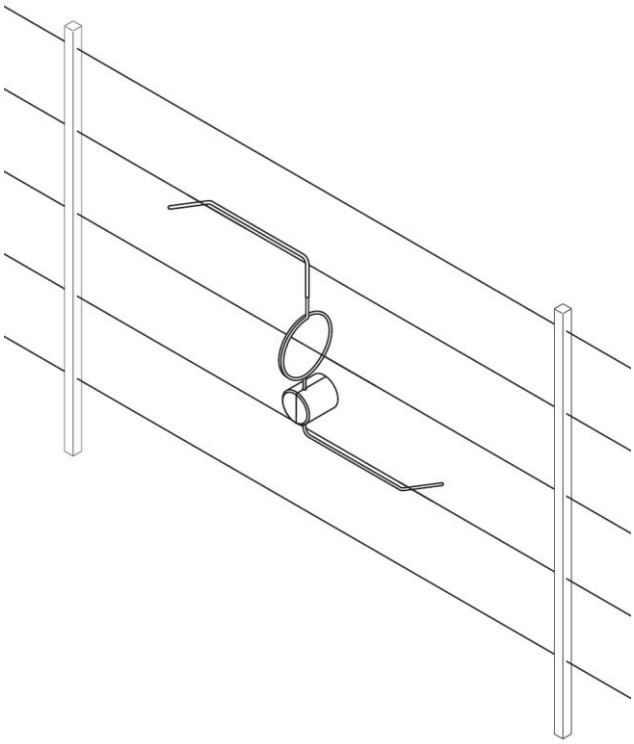

21: 2022/07670. 22: 2022/07/11. 43: 2023/05/08
51: C12N
71: PANTHERNA THERAPEUTICS GMBH
72: Jörg KAUFMANN, Oliver KEIL, Daniel TONDERA
33: EP 31: 20000064.4 32: 2020-02-11
33: EP 31: 20156987.8 32: 2020-02-12
33: EP 31: 21156423.2 32: 2021-02-10
54: RECOMBINANT NUCLEIC ACID CONSTRUCT AND USE THEREOF
00: -
The present invention is related to a recombinant nucleic acid construct comprising in 5'-> 3' direction - a 5' UTR, - a coding region coding for an effector molecule, and - a 3' UTR, wherein the 5' UTR is selected from the group consisting of a 5' UTR of a gene coding for MCP-1 or a derivative thereof having a nucleotide identity of at least 85 %, a 5' UTR of a gene coding for RPL12s.c. or a derivative thereof having a nucleotide identity of at least 85 %, a 5' UTR of a gene coding for Ang-2 or a derivative thereof having a nucleotide identity of at least 85 %, a 5' UTR of a gene coding for HSP70 or a derivative thereof having a nucleotide identity of at least 85 %, a 5' UTR of a gene coding for H3.3. or a derivative thereof having a nucleotide identity of at least 85 %, a 5' UTR of a gene coding for Galectin-9 or a derivative thereof having a nucleotide identity of at

least 85 %, a 5' UTR of a gene coding for GADD34 or a derivative thereof having a nucleotide identity of at least 85 %, a 5' UTR of a gene coding for EDN1 or a derivative thereof having a nucleotide identity of at least 85 %, a 5' UTR of a gene coding for HSP70m5 or a derivative thereof having a nucleotide identity of at least 85 %, a 5' UTR of a gene coding for E-selectin or a derivative thereof having a nucleotide identity of at least 85 % a 5' UTR of a gene coding for ICAM-1 or a derivative thereof having a nucleotide identity of at least 85 %, a 5' UTR of a gene coding for IL-6 or a derivative thereof having a nucleotide identity of at least 85 % and a 5' UTR of a gene coding for vWF or a derivative thereof having a nucleotide identity of at least 85 %; wherein 3' UTR is selected from the group consisting of a 3' UTR of a gene coding for vWF or a derivative thereof having a nucleotide identity of at least 85 %, a 3' UTR of a gene coding for MCP-1 or a derivative thereof having a nucleotide identity of at least 85 %,, a 3' UTR of a gene coding for RPL12s.c. or a derivative thereof having a nucleotide identity of at least 85 %, a 3' UTR of a gene coding for HSP70 or a derivative thereof having a nucleotide identity of at least 85 %, a 3' UTR of a gene coding for H3.3. or a derivative thereof having a nucleotide identity of at least 85 %, a 3' UTR of a gene coding for GADD34 or a derivative thereof having a nucleotide identity of at least 85 %, a 3' UTR of a gene coding for EDN1 or a derivative thereof having a nucleotide identity of at least 85 %, and a 3' UTR of a gene coding for IL-6 or a derivative thereof having a nucleotide identity of at least 85 %, wherein the effector molecule is effective in restoring a cellular function of a cell or is effective in exercising a therapeutic effect in or on a cell, and wherein the recombinant nucleic acid construct is different from a wild type mRNA coding for the effector molecule.

21: 2022/07912. 22: 2022/07/15. 43: 2023/04/18
51: E21B; E21D; F16B
71: HARDROCK MINING SOLUTIONS PTY LTD
72: MCLAREN, Clarissa Elizabeth
33: AU 31: 2020900236 32: 2020-01-29
54: DRILLING ASSEMBLY FOR INSERTING A ROCK BOLT
00: -
A drilling assembly is disclosed for drilling a borehole in a rock body and inserting a rock bolt within the borehole in a single pass. The drilling assembly includes an elongated drill string having a downhole end. A drill bit is detachably joined to the downhole end of the drill string, with the drill bit having an external screw thread extending in an axial direction of the drill string. The drill string is surrounded by a rock bolt sleeve that has a thread engaging formation at or near its downhole end and that is arranged to cooperate with the external screw thread of the drill bit so that the drill bit is able to be screwed into the rock bolt sleeve.

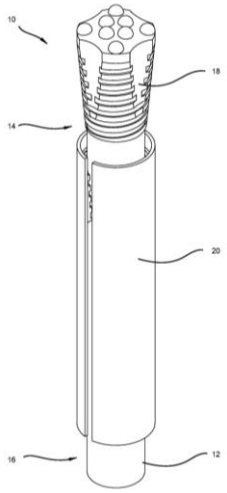

21: 2022/08046. 22: 2022/07/19. 43: 2023/03/16
51: G01R
71: OMICRON electronics GmbH
72: BITSCHNAU, Lukas, SCHEDLER, Horst
33: AT 31: A50012/2020 32: 2020-01-10
54: HIGH CURRENT SOURCE FOR A TEST SYSTEM FOR TESTING AN ELECTRICAL POWER DEVICE, AND TEST SYSTEM
00: -
A high current source (200) for a test system for testing an electric power device (30) comprises a first plurality of first switchable half-bridges (212) and a second plurality of second switchable half-bridges (222), which are connected in parallel and by means of which a test current is redundantly distributed. A control device (280) is designed to control the first and second half-bridges (212, 222) on the basis of an input signal in such a way that an output signal for the test current, which corresponds to the input signal, is applied across a bridge branch (230) between the first switchable half-bridges (212) and the second switchable half-bridges (222).

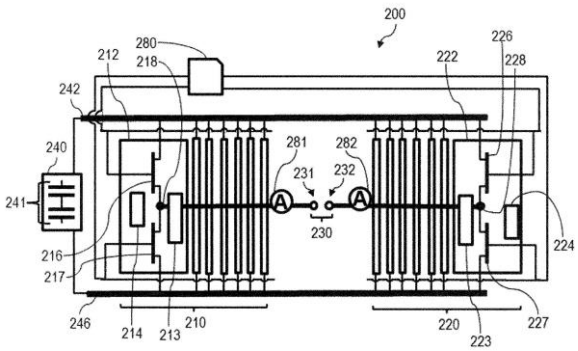

21: 2022/08537. 22: 2022/07/29. 43: 2023/03/22
51: H04N
71: Huawei Technologies Co., Ltd.
72: KOTRA, Anand Meher, ESENLIK, Semih, GAO, Han, WANG, Biao, ALSHINA, Elena Alexandrovna
33: PCT/EP(DE) 31: 2020/051788 32: 2020-01-24
54: AN ENCODER, A DECODER AND CORRESPONDING METHODS FOR ADAPTIVE LOOP FILTERING
00: -
A method of filtering a sample value of a picture and a video decoding apparatus are disclosed, the method comprises: obtaining a reconstructed sample value for a block of the picture; obtaining filter coefficients for adaptive loop filtering according to a bitstream; obtaining a sum value according to the filter coefficients and the reconstructed sample value for the block; rounding the sum value according to a vertical position of a sample in the block, to obtain a rounded sum value; obtaining a filter reconstructed sample value for the block according to the rounded sum value.

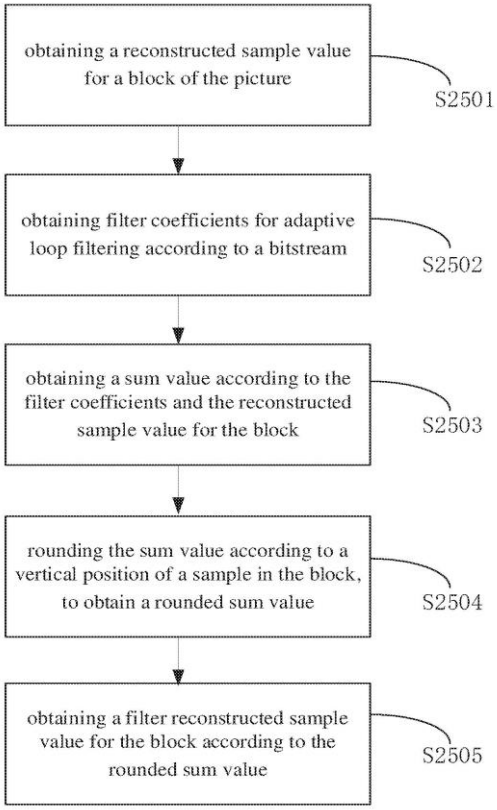

21: 2022/08586. 22: 2022/08/01. 43: 2023/02/28
51: B60R
71: 3 SIL SOLUÇÕES INTEGRADAS EM LOGÍSTICA DE FROTAS AUTOMOTIVAS LTDA.
72: GUILHERME DE CASTRO BICUDO PISANI
33: BR 31: BR1020200015320 32: 2020-01-23
54: ARRANGEMENT OF ELECTRONIC MODULES FOR IMMOBILIZING AND DEMOBILIZING GOODS VEHICLES, WITH ENGINE TAMPER DETECTION SYSTEM, AS WELL AS OPERATING PARAMETER CAPTURE AND OUT-OF-SIGNAL-COVERAGE-AREA SECURITY SYSTEM
00: -
To avoid fraud at insurance companies by the cargo vehicle owner. An RPM sensor module (M1) is coupled to the engine, which is connected to the crankshaft of the vehicle and receives an RPM detector circuit, working with another module or air/fuel intake phase sensor module (M2) of the injection system and receives a phase detector circuit. M1 and M2 are connected to the control module R. In case the criminal replaces M1 and M2 with original sensors, the operating vital signals of the engine will not be sent to the control module R, which, through trackers triggers the monitoring

center of the insurance company. Temperature and voltage sensors, added to M2 circuit, sends operating temperature and voltage information to the engine of the vehicle. A password and counter-password system makes it possible for the driver to leave an area where they are not in communication with the monitoring center.

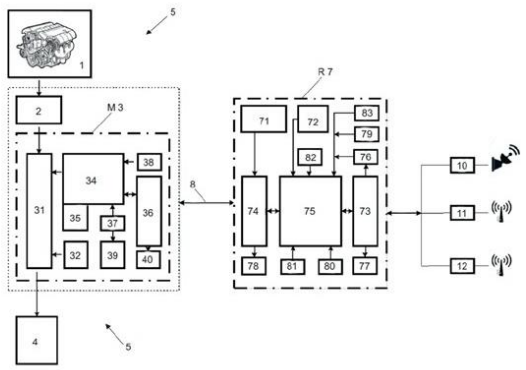

21: 2022/08684. 22: 2022/08/03. 43: 2023/03/13
51: C07B; C07C
71: KUMIAI CHEMICAL INDUSTRY CO., LTD
72: SAITO, Narumasa
33: JP 31: 2020-080620 32: 2020-04-30
54: METHOD FOR PRODUCING MONOSULFOXIDE DERIVATIVE
00: -
The present invention provides a method for producing a monosulfoxide derivative.

21: 2022/08816. 22: 2022/08/05. 43: 2023/05/08
51: F03D
71: MAX NICHOLAS RENEWABLES LTD
72: NORFOLK, Robert
33: GB 31: 2001035.1 32: 2020-01-24
54: ROTOR ASSEMBLY
00: -
A rotor assembly comprises a rotor having a plurality of blades and an axis about which the rotor rotates, each blade being spaced from the axis of the rotor such that there is a gap between the axis and an inner edge of each blade through which fluid can flow, and inner and outer edges of each blade lying in and defining a blade plane and each blade being offset from the axis of the rotor such that the axis does not lie in the blade plane; a casing partially surrounding the rotor, the casing having a first opening to permit a fluid flow into or out of the casing in a direction generally perpendicular to the rotor axis; and a second opening at an axial end of the casing to permit a fluid flow into or out of the casing in a direction generally parallel to the rotor axis.

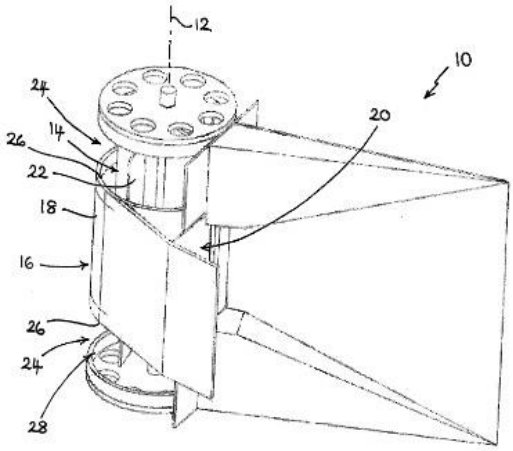

21: 2022/08831. 22: 2022/08/08. 43: 2023/04/19
51: G01R; G06F; H02J; H04Q
71: ENVISAGED PLATFORM TO EXCITE CONVERGENCE (PTY) LTD
72: MKUBELO, XOLANI, LAMBERT, BOKOLOSHE LUNGILE
33: ZA 31: 2021/05858 32: 2021-08-17
54: SYSTEM AND METHOD OF MANAGING UNITS FOR USE IN ACCESSING A SERVICE
00: -
The invention is a system and method of managing units for use in accessing a service. The system 10 includes communicates with user's device 14 via a suitable network 16 which can be Bluetooth, Wi-Fi or any other suitable wireless communication network. The device 14 includes suitable memory device on which is uploaded a computer application program which is arranged to perform certain operations in accordance with the invention. On registration, the user is required to provide details such as banking details that will be debited for transactions associated with acquiring tokens/units. The system 10 receives an indication of the total number of purchased units associated with the device 14 and allocates at least a portion of the units for use by the device 14. The system 10 is arranged to receive a request to allocate a portion of the total number of purchased units to the device 14.

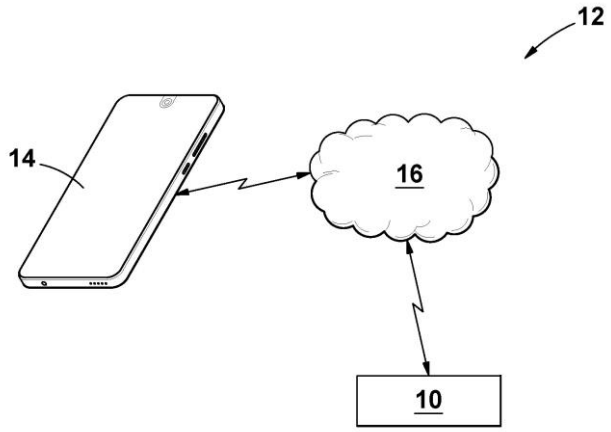

21: 2022/08857. 22: 2022/08/08. 43: 2023/03/17
51: B65D
71: SARONG SOCIETA' PER AZIONI
72: BARTOLI, ANDREA, CAPITINI, DAVIDE
33: IT 31: 102020000003425 32: 2020-02-19
33: IT 31: 102020000015676 32: 2020-06-29
33: IT 31: 102020000007669 32: 2020-04-09
54: CAPSULE FOR BEVERAGE
00: -
A capsule is proposed herein comprising: a casing (2) that extends about an axis (Z), which comprises a base wall (201) and a side wall (202) defining a cavity (203) containing an initial product to be joined to a fluid to obtain a final product, and a flanged edge (204; 212; 214; 217) extending from said side wall (202); a covering element (3), fixed to the flanged edge (204; 212; 214; 217) to close the cavity (203); a sealing element (4), associated with the flanged edge (204; 212; 214; 217) to make a fluidic seal with a dispensing machine; wherein the sealing element (4) comprises a cellulose-based ring (401); and wherein the ring (401) comprises a stratified structure comprising at least two cellulose- based layers (404; 406), between which there is an outer layer (404) arranged towards the outside and configured to contact the dispensing machine and an inner layer (406); a joining layer (405) to enable the ring (401) to be joined to the flanged edge (204; 212; 214; 217); and a further joining layer (407), to join together the two cellulose-based layers (404; 406).

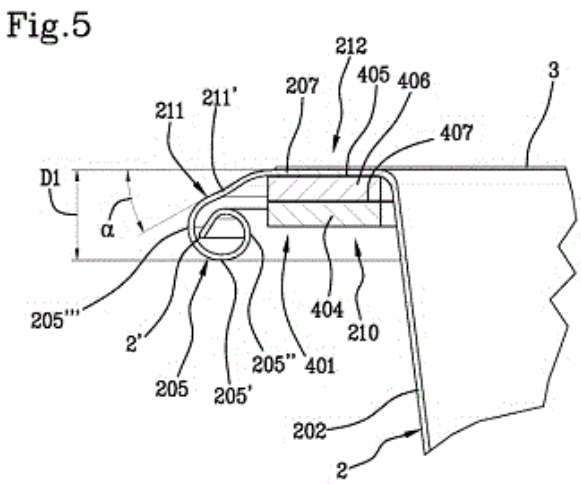

21: 2022/08931. 22: 2022/08/09. 43: 2023/03/16
51: A61K; A61P
71: SHIJIAZHUANG YILING PHARMACEUTICAL CO., LTD.
72: JIA, Zhenhua
33: CN 31: 202010153831.8 32: 2020-03-07
54: USE OF PHARMACEUTICAL COMPOSITION IN PREPARING ANTIBACTERIAL DRUG
00: -
A use of a pharmaceutical composition in preparing an antibacterial drug, the pharmaceutical composition being made from Ephedra sinica, gypsum, Forsythia, Scutellaria baicalensis, white mulberry root bark, fried bitter apricot kernel, radix peucedani, pinelliae rhizoma, chenpi, Bulbus Fritillariae thunbergii, greater burdock fruit, Flos Lonicerae japonicae, Rheum officinale, Chinese bellflower, and Glycyrrhiza uralensis, used to inhibit the Gram-positive bacteria Staphylococcus aureus, group A hemolytic streptococcus, group B hemolytic streptococcus, and Diplococcus pneumoniae, and the Gram-negative bacteria Escherichia coli and Shigella dysenteriae.

21: 2022/08960. 22: 2022/08/08. 43: 2023/03/22
51: H01B; H02B
71: FRANCISQUINI, Melquisedec
72: FRANCISQUINI, Melquisedec
33: BR 31: 10 2020 003216-0 32: 2020-02-14
54: SINUSOIDAL TUBULAR CONDUCTING BUSBAR
00: -
The sinusoidal tubular conducting busbar is an electrical conducting busbar, more specifically a

conducting busbar having a sinusoidal tubular shape for use in electrical cabinets for switchgear and power control for low and high voltages and prefabricated electricity lines. The busbar has an initial fastening tab that is connected to a first sine curve, which is in turn connected to a joining tab, which is in turn connected to a second sine curve, such that said first sine curve and said second sine curve form a tubular region therebetween where there is no contact between said first sine curve and said second sine curve. Said second sine curve is linked to a final fastening tab or to a second joining tab, which is linked to a third sine curve, said third sine curve being linked to a final fastening tab.

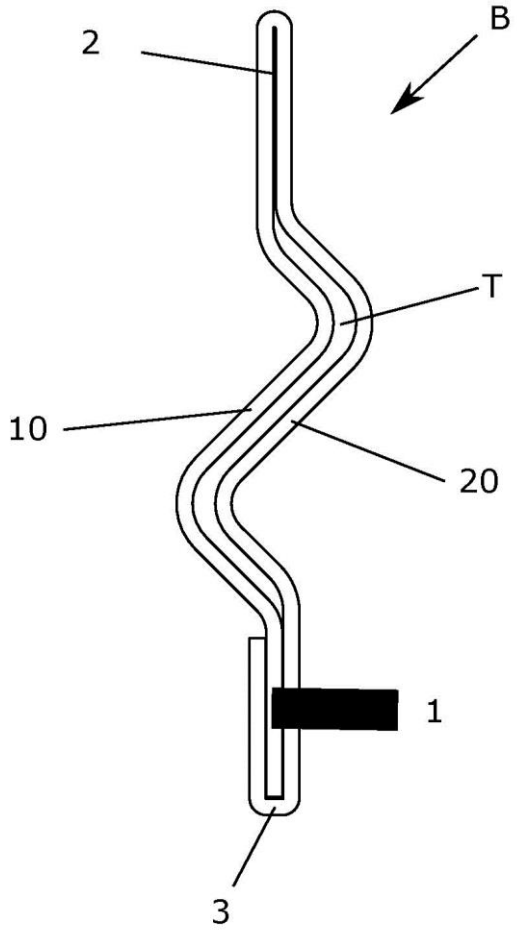

21: 2022/08961. 22: 2022/08/08. 43: 2023/03/16
51: B01D; C25B
71: Linde GmbH
72: PESCHEL, Andreas, HENTSCHEL, Benjamin
33: DE 31: 10 2020 000 936.0 32: 2020-02-14

54: METHOD AND PLANT FOR THE ELECTROCHEMICAL PRODUCTION OF OXYGEN
00: -
The invention relates to a method for producing a gas product (10) containing oxygen, wherein a feedstock (1) containing water is subjected to electrolysis (E) to obtain a raw anode gas (2), which is rich in oxygen and contains hydrogen, and a raw cathode gas (14), which is low in oxygen and rich in hydrogen. The raw anode gas is at least partially subjected to a catalytic conversion (C) of hydrogen to water to obtain a first mixture (4) with depleted hydrogen content. A first part of the first mixture (4) is returned to the raw anode gas (2) downstream of the electrolysis (E) and upstream of the catalytic conversion (C), and the gas product containing oxygen is formed using at least a second part of the first mixture. The invention also relates to a plant for carrying out a method of this type.

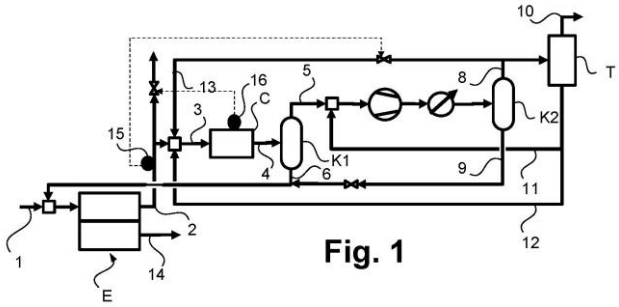

Fig. 1

21: 2022/08996. 22: 2022/08/11. 43: 2023/03/23
51: A61K; A61Q
71: Croda, Inc., Croda International Plc
72: JAMES, Neil, PARK, Kimun
33: US 31: 62/982,862 32: 2020-02-28
54: COMPOSITIONS COMPRISING HYDROLYSED PROTEINS
00: -
The present invention provides a composition comprising a blend of: a) a first component which is partially hydrolysed protein obtained from a potato protein source; and b) a second component which is partially hydrolysed protein obtained from a nonpotato vegetable protein source; wherein the weight ratio of first component: second component in the blend is in the range 0.5:1 to 2:1. The invention also provides a personal care formulation comprising such a composition and a personal care ingredient, wherein the personal care formulation is for topical application to skin or hair. The invention further provides a method of treating hair using a

composition and the use of a composition for the treatment of hair.

21: 2022/09123. 22: 2022/08/15. 43: 2023/02/28
51: A61K; C07K; C12N
71: BEIJING HEALTH GUARD BIOTECHNOLOGY, INC.
72: LIU, Yongjiang, ZHANG, Haijiang, YUN, Bingling, ZHANG, Aijing, WANG, Yan, CHEN, Xiao, ZHANG, Yao, YIN, Fei, WU, Shuming
33: CN 31: 202011454175.1 32: 2020-12-10
54: RECOMBINANT SUBUNIT VACCINE OF NOVEL CORONAVIRUS AND APPLICATION THEREOF
00: -
Disclosed is a fusion protein containing an antigen epitope of a novel coronavirus COVID-19 vaccine. The fusion protein consists of an antigen epitope fragment of the novel coronavirus COVID-19 vaccine and an immunoglobulin Fc fragment, wherein the antigen epitope fragment of the novel coronavirus COVID-19 vaccine is the RBD fragment and SD1 fragment in the S1 subunit. By means of research and exploration, it is found that SD1 is fused on the basis of an RBD, so that flexibility and variability can be increased, a head-to-tail structure is easily formed, the structure is more stable, and compared with the fusion of the RBD only, the present invention is more advantageous. Further, experiments show that the fusion protein of the antigen epitope obtained in the present invention has better immune characteristics and stability, and the effect is significantly better than the effect of fusing only the RBD.

21: 2022/09130. 22: 2022/08/15. 43: 2023/04/12
51: C07J
71: HETERO LABS LIMITED
72: BANDI, Parthasaradhi Reddy, KURA, Rathnakar Reddy, ADULLA, Panduranga Reddy, KASIREDDY, Bhaskar Reddy
33: IN 31: 202041005909 32: 2020-02-11
54: NOVEL TRITERPENE DERIVATIVES AS HIV INHIBITORS
00: -
The present invention relates to novel triterpene derivatives of formula (I); and pharmaceutically acceptable salts thereof, wherein R1, R2, R3, R4, n, and ring (II) are as defined in formula (I). The invention also relates to novel triterpene derivatives, related compounds, and pharmaceutical compositions useful for the therapeutic treatment of viral diseases and particularly HIV mediated diseases.

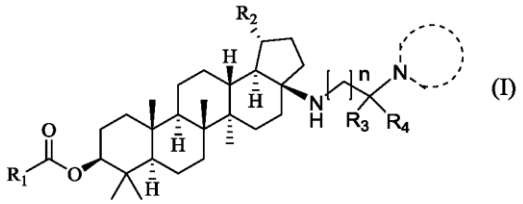

(I)

(II)

21: 2022/09168. 22: 2022/08/16. 43: 2023/02/28
51: B01D
71: SLP HOLDINGS INCORPORATED
72: LULEWICZ, TIMOTHY RICHARD
54: MOBILE DUST SUPPRESSION APPARATUS
00: -
The invention relates to a mobile dust suppression apparatus for controlling dust that emanates from a mine stockpile. The apparatus (100) includes: a receptacle (200) for receiving and holding ballast; a stanchion (300) that extends vertically from the receptacle (200); a pipe (400) that is supported by the stanchion (300) and arranged to convey a fluid upwardly and relative to the stanchion (300); and a fluid dispersion means (500) that is in fluid flow communication with the pipe (400) and arranged to disperse the fluid on surfaces that surround the mobile dust suppression apparatus (100), wherein, in use, ballast is introduced into the receptacle (200) to weigh the mobile dust suppression apparatus (100) down and to stabilize it at a first location and removed from the receptacle (200) to reduce the weight of the mobile dust suppression apparatus (100) and to permit it to be displaced to a second location.

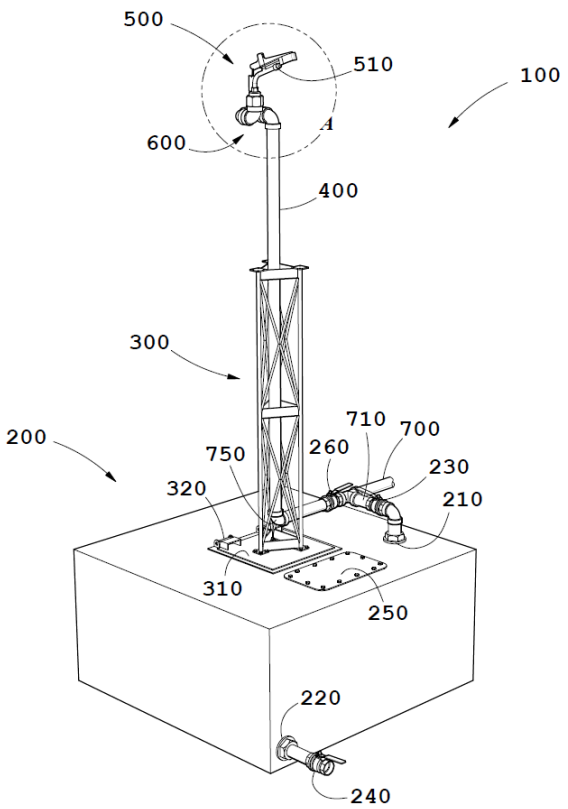

21: 2022/09175. 22: 2022/08/16. 43: 2023/03/23
51: E03B; F25B
71: CIRRUS REHOS RENEWABLE POWER AND WATER (PTY) LTD
72: MURRAY, Mike, ENSLIN, Johan Adam
33: ZA 31: 2020/00358 32: 2020-01-20
54: ATMOSPHERIC WATER GENERATOR
00: -
The invention relates to an atmospheric water generator that includes an absorption heat transformer (AHT) designed as a heat pump that is able to extract heat even from waste heat sources at or below ambient temperatures, with an evaporator working at a favourable design temperature (preferably between 2°C and 15°C) for chilled water supply to a cold coil that extracts atmospheric water from ambient air. The AHT employs a pseudo-isobaric temperature glide bubble reactor that contains a suitable binary liquid-vapour mixture in a density separation distillation environment, powered by a vapour absorption process.

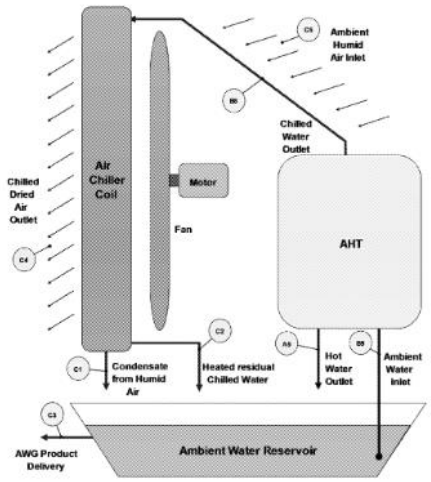

21: 2022/09192. 22: 2022/08/16. 43: 2023/03/16
51: B01D; B01J; C22B
71: Purdue Research Foundation
72: WANG, Nien-hwa Linda, HARVEY, David, DING, Yi
33: US 31: 62/982,807 32: 2020-02-28
54: MULTI-DIMENSIONAL LIGAND-ASSISTED CHROMATOGRAPHY METHOD FOR THE PURIFICATION OF RARE EARTH ELEMENTS AND OTHER METAL IONS FROM WASTE MAGNETS
00: -
A method of recovering substantially rare earth elements (REEs) from magnets, including first dissolving a magnet to yield a solution containing Nd, Pr, and Dy, and then equilibrating a first column with Cu2+ solution to yield a first equilibrated column, introducing the solution to the first equilibrated column, and introducing a ligand solution to the first equilibrated column to establish three bands of different liquid compositions in the column, wherein the three bands comprise a Dy/Nd mixed band, a first pure Nd band, and a Nd/Pr mixed band. Next, sending the Dy/Nd mixed band to a second column containing a Cu2+ solution and introducing a ligand solution to the second column to establish a pure Dy band and a second pure Nd band in the second column, and sending the Nd/Pr mixed band to a third column containing a Cu2+ solution.

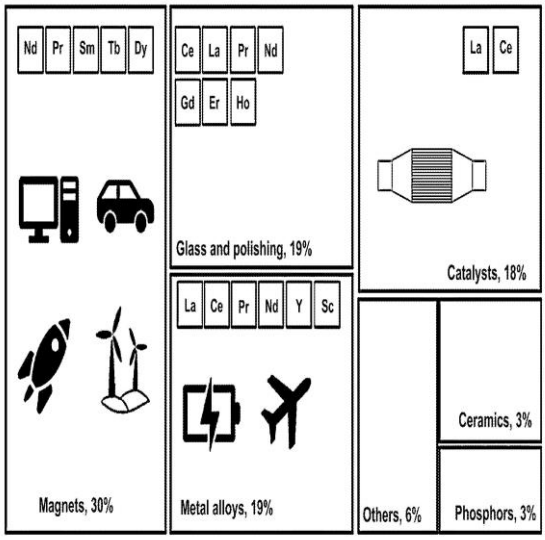

21: 2022/09193. 22: 2022/08/16. 43: 2023/03/23
51: H04W
71: ZTE Corporation
72: ZHANG, Shujuan, LU, Zhaohua, WANG, Jianwei, GAO, Bo, XIAO, Huahua
33: CN 31: 202010054515.5 32: 2020-01-17
54: QUASI-CO-LOCATION INFORMATION OBTAINING METHOD, COMMUNICATION NODE, AND STORAGE MEDIUM
00: -
Disclosed are a quasi-co-location information obtaining method, a communication node, and a storage medium. The quasi-co-location information obtaining method comprises: the communication node obtains the number x and/or a determining mode of quasi-co-location reference signal sets of a first element according to first information, wherein the first information comprises at least one of the following information: information indicated in a downlink control channel for scheduling the first element; the number of the quasi-co-location reference signal sets corresponding to a predetermined item codepoint in a transmission configuration indicator state (TCI state) mapping table; the number of CORESET groups; the maximum number of the quasi-co-location reference signal sets corresponding to one codepoint in the TCI state mapping table; the number of times of time domain repetition of the first element; and the number of the quasi-co-location reference signal sets corresponding to a second element.

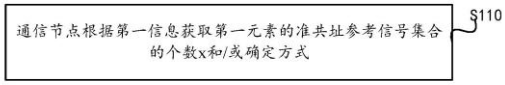

图 1

S110 A communication node obtains the number x and/or a determining mode of quasi-co-location reference signal sets of a first element according to first information

21: 2022/09252. 22: 2022/08/17. 43: 2023/03/24
51: B05B; F41B
71: COUNCIL OF SCIENTIFIC AND INDUSTRIAL RESEARCH an Indian registered body incorporated under the Regn. of Soc. Act
72: DAS, Lalgopal, KUMAR MAJI, Palash, CHATTERJEE, Avik, HIRANI, Harish
33: IN 31: 202011009672 32: 2020-03-06
54: VEHICLE MOUNTED SYSTEM AND METHOD FOR DISTRIBUTED IRRITANT SPRAY
00: -
The vehicle mounted distributed irritant spray system has mechanisms for mist spraying near the vehicle and the jet spraying for moderate distance covering wide area around the vehicle. The mixing of the irritant liquid with the water is accomplished in the tank by whirling jets generated through bypassing the excess pumping fluid to whirl nozzle head. Proportioning of irritant solution with water for desired irritant concentration during spraying is carried out by operating valves in the bifurcated pump suction pipelines emerging from two different liquid storage tanks and valve in concentrated irritant pipeline from irritant vessel. The pumping system has diversion feature for utilization of the pressurized water for other application like foam generation for firefighting and washing the pipe network.

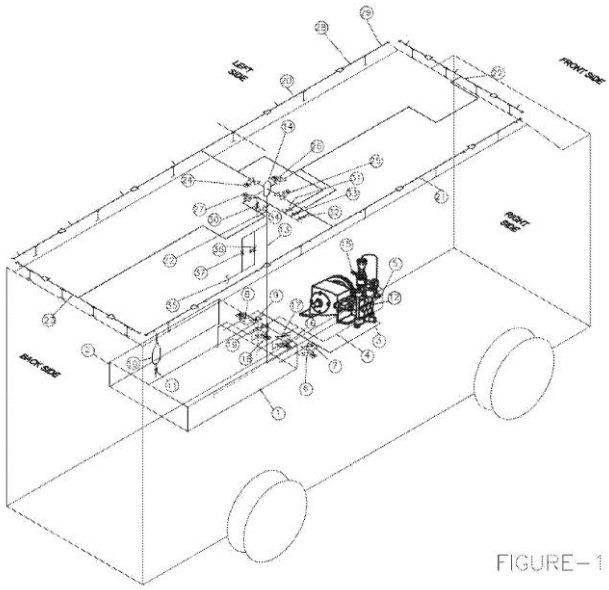

FIGURE–1

21: 2022/09254. 22: 2022/08/17. 43: 2023/03/09
51: C07C
71: ExxonMobil Chemical Patents Inc.
72: BAO, Xiaoying
33: US 31: 62/986,229 32: 2020-03-06
54: PROCESSES FOR UPGRADING ALKANES AND ALKYL AROMATIC HYDROCARBONS
00: -
Processes for upgrading a hydrocarbon. The process can include (I) contacting a hydrocarbon-containing feed with a catalyst that can include a Group 8-10 element or a compound thereof disposed on a support to effect one or more of dehydrogenation, dehydroaromatization, and dehydrocyclization of at least a portion of the hydrocarbon-containing feed to produce a coked catalyst and an effluent. The process can also include (II) contacting at least a portion of the coked catalyst with an oxidant to effect combustion of at least a portion of the coke to produce a regenerated catalyst. The process can also include (III) contacting an additional quantity of the hydrocarbon-containing feed with at least a portion of the regenerated catalyst. A cycle time from the contacting the hydrocarbon-containing feed with the catalyst in step (I) to the contacting the additional hydrocarbon-containing feed with the regenerated catalyst in step (III) can be < 5 hours.

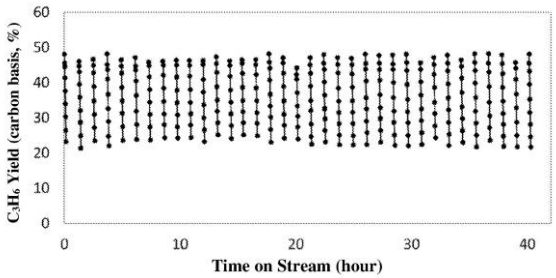

21: 2022/09265. 22: 2022/08/18. 43: 2023/03/27
51: A61K
71: ZERO CANDIDA LTD.
72: HOLZER, ASHER, BEN HAROOSH, ELI, OPPENHEIM, DOV, COHEN FLAX, YUVAL
33: US 31: 63/318,332 32: 2022-03-09
54: DEVICES AND METHOD FOR PREVENTION AND TREATMENT OF FUNGAL AND BACTERIAL MICROORGANISMS
00: -
The invention features methods of inhibiting the growth of, or killing, fungal-, bacterial-, and viral-infections by exposure to light, optionally together with one or more active substances such as therapeutics, hormones, and buffer-compounds.

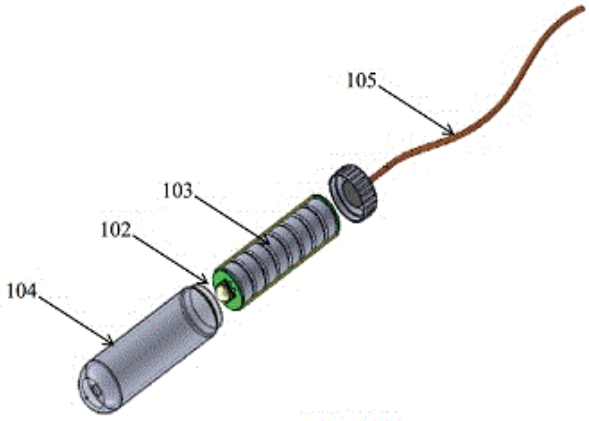

21: 2022/09287. 22: 2022/08/18. 43: 2023/03/09
51: G06Q
71: Allink Co., Ltd.
72: KIM, Kyung Dong
33: KR 31: 10-2020-0020635 32: 2020-02-19
54: PAYMENT INFORMATION TRANSFER SYSTEM USING MOBILE TERMINAL AND PAYMENT INFORMATION TRANSFER METHOD USING SAME
00: -
According to the present invention, a mobile payment card number and a seller terminal ID are transmitted from a user terminal to a payment

information transfer server in order to perform offline mobile payment, and a payment information transfer message including the mobile payment card number is transmitted to a seller terminal by the payment information transfer server. Accordingly, the present invention is advantageous in that payment can be processed through an identical user interface despite of various payment methods of payment business operators.

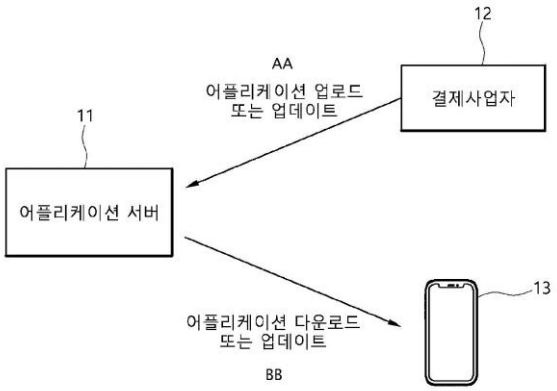

11 ... Application server
12 ... Payment business operator
AA ... Upload or update application
BB ... Download or update application

21: 2022/09293. 22: 2022/08/18. 43: 2023/03/15
51: C07D; A61K; A61P
71: KANGPU BIOPHARMACEUTICALS, LTD.
72: LIU, HUI, DENG, YANJUN, GE, CHUANSHENG, ZHANG, LEI, XING, FENG
33: CN 31: 202010067409.0 32: 2020-01-20
33: CN 31: 202010413162.3 32: 2020-05-15
54: ISOINDOLINE DERIVATIVE, AND PHARMACEUTICAL COMPOSITION AND USE THEREOF
00: -
Disclosed are a isoindoline derivative, an intermediate thereof, a preparation method therefor, a pharmaceutical composition thereof and the use thereof. The isoindoline derivatives of the present invention can specifically target and regulate various proteins by binding to Cereblon, thereby effectively treating cancers and other related diseases.

21: 2022/09340. 22: 2022/08/19. 43: 2023/03/09
51: A61K A61P
71: AXCESS (UK) LTD
72: NEW, Roger R. C., TRAVERS, Glen
33: AU 31: 2020900183 32: 2020-01-23
54: CELLULAR UPTAKE
00: -
The present invention provides a bile acid or a pharmaceutically acceptable salt thereof, for use in a method of treatment of the human or animal body, which method comprises administering a therapeutic compound to the human or animal body, wherein: a. said bile acid is chenodeoxycholic acid or deoxycholic acid, and b. optionally, said bile salt is employed in conjunction with EDTA, c. in said method the bile acid or salt thereof, and EDTA, are used to enable or enhance intracellular uptake of the therapeutic compound.

21: 2022/09355. 22: 2022/08/19. 43: 2023/03/10
51: G01N
71: HUAINAN NORMAL UNIVERSITY
72: HUANG, Kaifeng, CHU, Tao, XIANG, Baokang, WU, Long, ZHOU, Ruihong
33: CN 31: 202210834700.5 32: 2022-07-14
54: MULTIFUNCTIONAL AUTOMATIC DETECTION PLATFORM BASED ON MACHINE VISION TECHNOLOGY
00: -
The present invention discloses a multifunctional automatic detection platform based on a machine vision technology and relates to the technical field of machine vision detection. A length, a width and a height of a product are acquired; a specification index of the product is calculated by means of the length, width and height of the product; a specification grade of the product is divided into five grades by means of the specification index of the product; each grade has a specification index range of the product, and the specification grade of the product is judged by determining whether the specification grade is within the specification grade range of the product; and if the specification grade is not within the specification grade range of the product divided into five grades, a corresponding product is marked as an unqualified product, and the unqualified product is corrected, so that a function of classifying specification of the product can be realized after an external dimension of the product is detected.

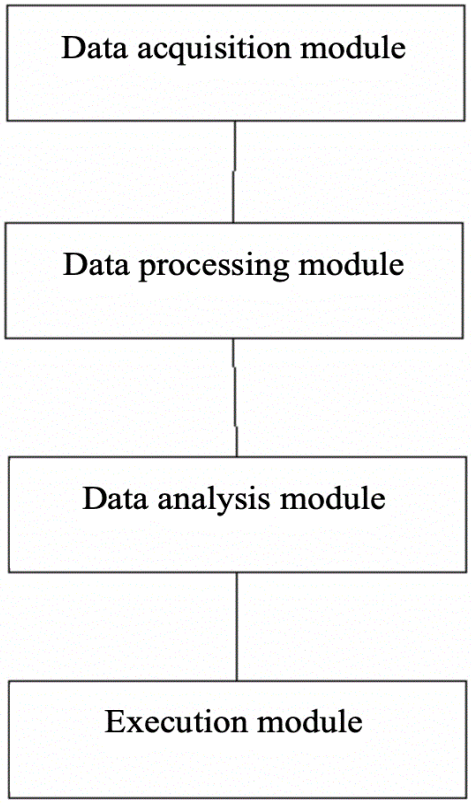

21: 2022/09372. 22: 2022/08/22. 43: 2023/03/06
51: H02J; H02S
71: Season Energy Technology Co., Ltd.
72: YANG, Ching-Chieh
54: SOLAR ENERGY SYSTEM WITH EFFICIENCY ENHANCEMENT
00: -
A solar energy system includes at least one solar energy efficiency enhancement device (1), at least one solar power generating device (2), at least one maximum power point tracking device (3), and an electric power storage unit (4). The at least one solar energy efficiency enhancement device includes multiple efficiency enhancing modules (11) each having a capacitor boost element (12), a communication monitoring element (13), a smart control chip element (14), a working time extending element (15), an electricity output element (16), and an electricity management operation element (17). The voltage produced by the at least one solar power generating device is delivered through the capacitor boost element to the electricity output element which outputs an electric power to the at least one maximum power point tracking device which stores the electric power in the electric power storage unit.

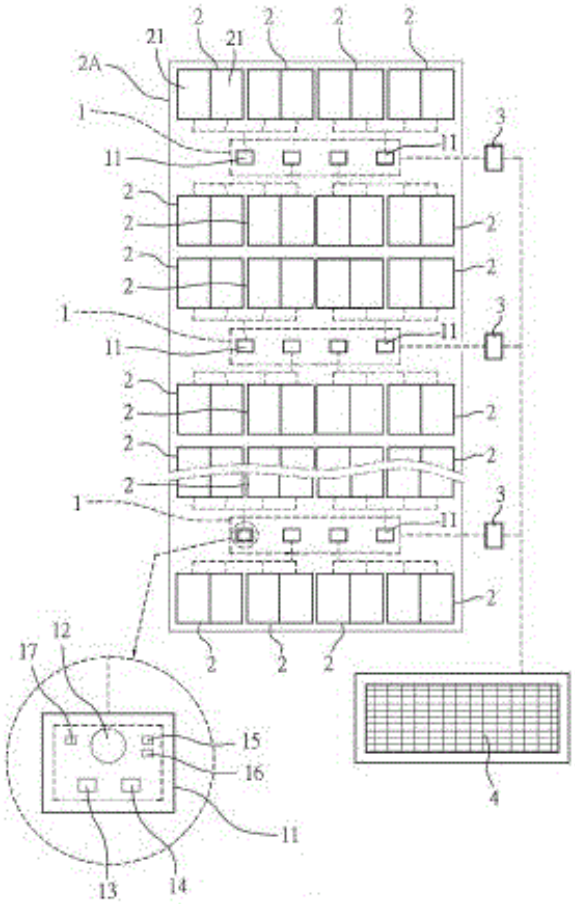

21: 2022/09402. 22: 2022/08/22. 43: 2023/03/22
51: B60L; B60S; B60K
71: AULTON NEW ENERGY AUTOMOTIVE TECHNOLOGY GROUP, SHANGHAI DIANBA NEW ENERGY TECHNOLOGY CO., LTD.
72: ZHANG, JIANPING, HUANG, CHUNHUA
33: CN 31: 202010076992.1 32: 2020-01-23
54: CLAMPING VEHICLE LANE CONTROL METHOD AND SYSTEM, ELECTRONIC DEVICE AND STORAGE MEDIUM
00: -
A clamping vehicle lane control method and system, an electronic device and a storage medium. A clamping vehicle lane (1) has a vehicle carrying plane (11) that is used to carry an electric vehicle (9) and that can be raised and lowered. The clamping vehicle lane control method comprises: controlling the vehicle carrying plane (11) to be raised and lowered between any two heights among an initial height, a battery removal height, and a battery

installation height, wherein the battery removal height is a height that matches a battery pack removal process of the electric vehicle (9), and the battery installation height is a height that matches a battery pack installation process of the electric vehicle (9). In the present invention, the height of the vehicle carrying plane (11) is controlled so that the vehicle carrying plane (11) may meet battery replacement requirements of each stage, thus shortening the overall battery replacement time, and improving the efficiency of battery replacement.

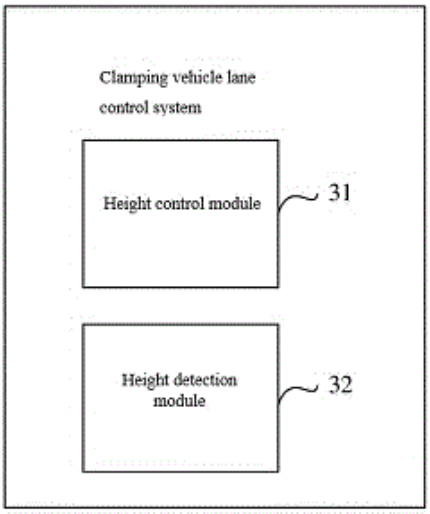

21: 2022/09481. 22: 2022/08/24. 43: 2023/03/24
51: A61K; A61P; C07D
71: JMackem Co., Ltd.
72: LEE, Jeewoo, ANN, Jihyae
33: KR 31: 10-2020-0048788 32: 2020-04-22
54: BENZIMIDAZOLONE-BASED CINNAMAMIDE DERIVATIVE AS TRPV1 ANTAGONIST AND PHARMACEUTICAL COMPOSITION FOR TREATMENT OR PREVENTION OF PAIN CONTAINING SAME AS ACTIVE INGREDIENT
00: -
The present invention relates to a benzimidazolone-based cinnamamide derivative as a TRPV1 ligand and a pharmaceutical composition for the treatment or prevention of pain containing same as an active ingredient. Example compounds provided in one aspect of the present invention can block TRPV1 activation by capsaicin, which is an activator of a TRPV1 receptor, while ameliorating pain and effectively reducing side effects such as abnormal body temperature by inducing appropriate inhibition of about 20% to 80% of pH.

21: 2022/09535. 22: 2022/08/25. 43: 2023/03/09
51: B01D; F25D; G01F; G05B; H04Q
71: BIBO WATER (PTY) LTD
72: FINGER, Sholom Dov-Ber
33: ZA 31: 2020/01236 32: 2020-02-27
54: METHOD OF AND SYSTEM FOR MANAGING A WATER FILTRATION ARRANGEMENT
00: -
A sensing arrangement for a water filtration machine is provided, the machine comprising a holder to accommodate a replaceable filter canister having an identifier (typically a unique RFID chip) on the filter canister. The sensing arrangement comprises a reader (typically an RFID chip reader) to read the identifier on the filter canister, to determine when a new filter canister has been inserted into the holder; a flow meter module to determine the flow of water through the filter canister; and a telematics communication module to send data from the reader (when a filter canister has been inserted and/or removed from the holder) and the flow meter module to a remote server for tracking/monitoring usage of the filter canister to determine when the filter canister needs to be replaced. The sensing arrangement may include a filter detection switch to determine when a new filter canister has been inserted into the holder.

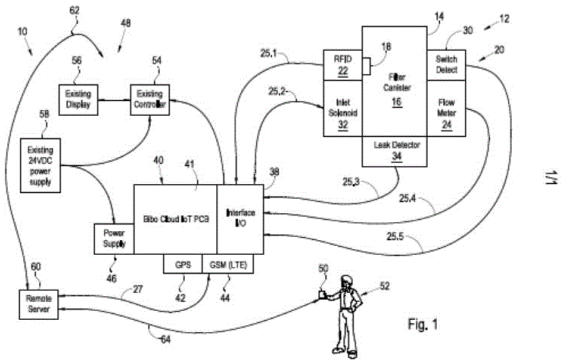

21: 2022/09557. 22: 2022/08/26. 43: 2023/03/09
51: B02C
71: Secretary, Department of Atomic Energy
72: LADOLA, Y.S., PAIK, Shrishma, ARCHANA, T.M., CHOWDHURY, Sujit, SONAWANE, D.V., SAHU, M.L., BHATTACHARYA, S.
33: IN 31: 202221026845 32: 2022-05-09
54: COMPACT HYDRAULIC PINNED JAW CRUSHER SYSTEM WITH HIGH SIZE REDUCTION RATIO

00: -
The present invention discloses a compact crusher system comprising a jaw assembly including at least two linearly movable jaws for crushing material block by compressing, said jaws are facing each other and having a gap there between defining an active crushing area, a driving unit to push said jaws towards each other for compressing the block in the crushing area thereby generating local stresses in the block for crushing operation and a flat screen element in said crushing area and below said jaws, said screen element includes multiple openings for passing of crushed material small than said openings through said openings leaving active crushing area. In a preferred embodiment, inlet opening area of the crusher area is more than 1m² and outlet is restricted to at least 0.0016m² by the screen enabling feeding of the block less than 0.85m in the crusher area and screening of only crushed pieces with size less than 40mm pass through screen for having size reduction ratio of 20 or more.

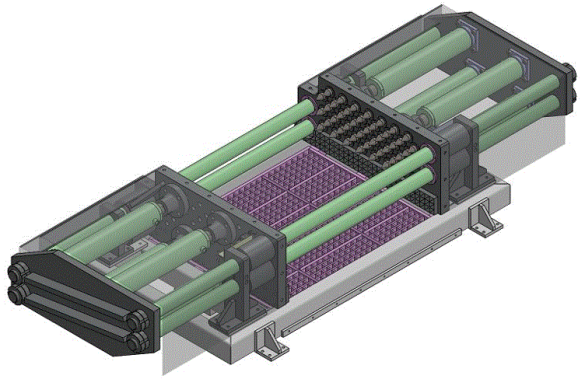

21: 2022/09559. 22: 2022/08/26. 43: 2023/03/23
51: A23J
71: Sericultural & Agri-Food Research Institute Guangdong Academy of Agricultural Sciences
72: LI, Ping, DENG, YuanYuan, WEI, Zhencheng, ZHANG, Yan, TANG, Xiaojun, LIU, Guang, ZHOU, Pengfei, ZHAO, Zhihao
54: A HIGHLY SOLUBLE PEA PROTEIN AND THE PREPARATION METHOD THEREOF
00: -
The present disclosure relates to a method for preparation of highly soluble pea protein and application thereof. The present disclosure uses food-grade protein glutaminase to deamidate the pea protein, which has high action efficiency and ensures the deamidation effect, thereby improving the industrial application of the pea protein. The pea protein product prepared by the present disclosure has significantly improved solubility under a series of pH conditions, and improved thermal stability and salt tolerance.

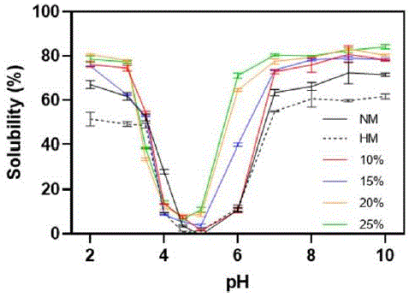

21: 2022/09583. 22: 2022/08/26. 43: 2023/03/24
51: C07F; A61P
71: PEKING UNIVERSITY
72: LIU, Zhibo, CHEN, Junyi
33: CN 31: 202010137553.7 32: 2021-03-03
54: BORON CARRYING AGENT FOR INTEGRATED TUMOR DIAGNOSIS AND TREATMENT, AND PREPARATION METHOD THEREFOR AND USE THEREOF
00: -
The present invention relates to a boron carrying agent for integrated tumor diagnosis and treatment, and a preparation method therefor and use thereof. Provided is a compound represented by formula I: wherein an R group is hydrogen or alkyl. A boron atom connected to the benzene ring may be 10B or natural boron, and at least one fluorine atom in -BF 3 - is radiolabeled. The present invention generally relates to the fields of radiopharmaceuticals and nuclear medicine. The compound in the present invention can be used for a drug for integrated diagnosis and treatment in tumor diagnosis and BNCT treatment, and by means of the same chemical structure, a reliable distribution result of a drug in vivo is provided.

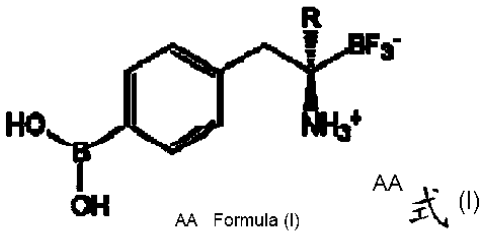

21: 2022/09663. 22: 2022/08/30. 43: 2023/03/09
51: B60J
71: MANITOU ITALIA S.R.L.
72: IOTTI, MARCO
33: IT 31: 102021000022928 32: 2021-09-06
54: TELEHANDLER WITH IMPROVED WINCH
00: -
Described is a telehandler (1) comprising an operating arm (10) to which is coupled a winch (2) equipped with a motor-driven drum (21), on which is wound a cable (22) to which is fixed a hook (23), also comprising first means (51) for detecting the quantity of cable (22) unwound.

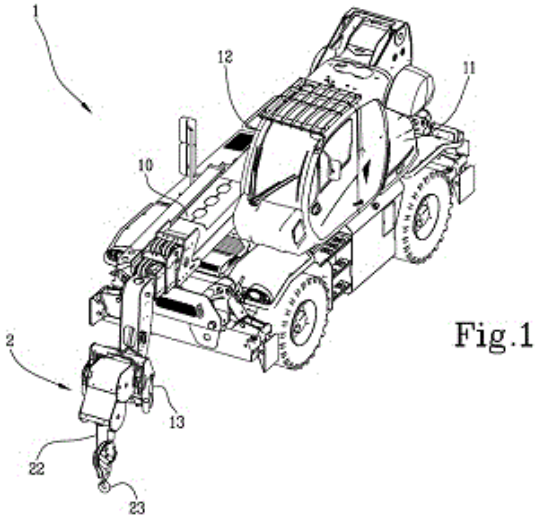

21: 2022/09721. 22: 2022/08/31. 43: 2023/04/11
51: H04L; G06Q
71: VISA INTERNATIONAL SERVICE ASSOCIATION
72: HURRY, Simon J., PIERRE, Alexandre
33: US 31: 62/758,430 32: 2018-11-09
54: DIGITAL FIAT CURRENCY
00: -
Techniques are disclosed which include receiving, by a central entity computer, a request for digital currency. The request includes a serial number and a denomination of a physical currency. The central entity computer generates the digital currency for the denomination and linked to the serial number. The generating includes recording the digital currency on a blockchain. The central entity computer transmits a notification of the generation of the digital currency. The central entity computer causes removal of the physical currency from circulation in a fiat currency system.

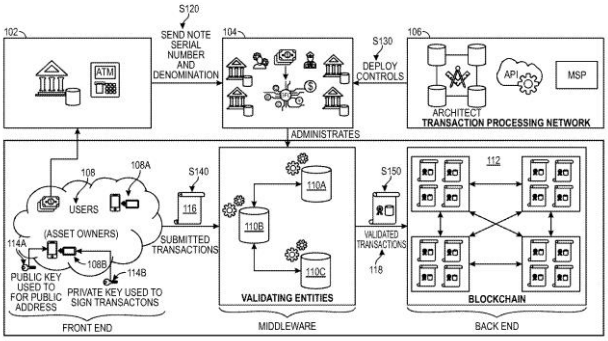

21: 2022/09733. 22: 2022/08/31. 43: 2023/03/16
51: H04W
71: TELEFONAKTIEBOLAGET LM ERICSSON (PUBL)
72: GUNNARSSON, Fredrik, SHREEVASTAV, Ritesh
33: US 31: 62/971,604 32: 2020-02-07
54: RELATIVE POSITIONING ASSISTANCE INFORMATION
00: -
Embodiments include methods, performed by a network node, for providing positioning assistance data to one or more user equipment (UEs) in a wireless network. Such methods include determining relative location information for one or more transmission reception points (TRPs) in the wireless network based on absolute location information for an associated TRP in the wireless network. Such methods also include transmitting, to one or more UEs, positioning assistance data including the relative location information for the one or more TRPs. Other embodiments include complementary methods for a UE, as well as network nodes and UEs configured to perform such methods.

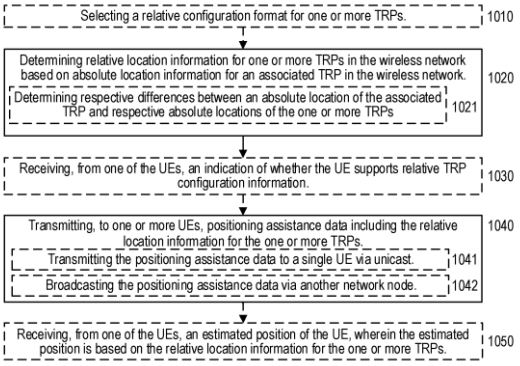

21: 2022/09819. 22: 2022/09/02. 43: 2023/04/12
51: B65D
71: APL CARTONS (PTY) LTD
72: PORTWIG, Heinrich
54: CONTAINER AND METHOD OF ERECTING A CONTAINER
00: -
A container (10) includes a corner pillar (56) formed folded from a corner flap (22) that is anchored at its top by an inner stacking lug (58) and at its bottom by a lock tab (62) in a lock aperture (64) in a base (12) of the container. An end wall is formed by folding an inner wall panel (20) relative to an outer wall panel (18), with an outer tacking lug (46) extending from a top of the end wall. The inner and outer stacking lugs (58,45) are received in a lug aperture (66) defined in a top flap (16).

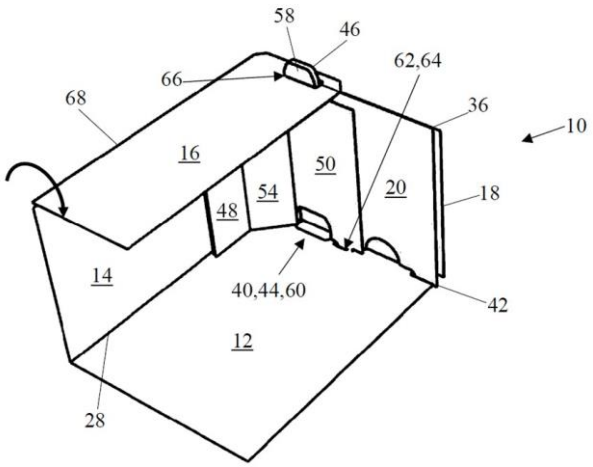

21: 2022/09820. 22: 2022/09/02. 43: 2023/04/12
51: F04D; F16J
71: SEAL-RYT CORP.
72: MONAHAN, Thomas, HUARD, Michael
33: US 31: 16/809,461 32: 2020-03-04

54: BEARING EXTRACTION FROM A STUFFING BOX OF A ROTARY MECHANICAL DEVICE
00: -
An improved bearing or bushing body extraction from a stuffing box using jack screws is provided. The bearing or bushing seal body includes at least one jack screw on each half of a split body. The jack screw passes axially through the sidewall of the body to the inner flange of the stuffing box and turning the jack screw against the inner flange to lift the body from the stuffing box. A single inner threaded or double threaded insert with a reverse outer thread and standard inner thread is inserted into the bottom wall of the body so that the body may be installed flush against the inner flange. By turning the jack screw through the insert and against the flange, the seal body is pushed out rather than pulled.

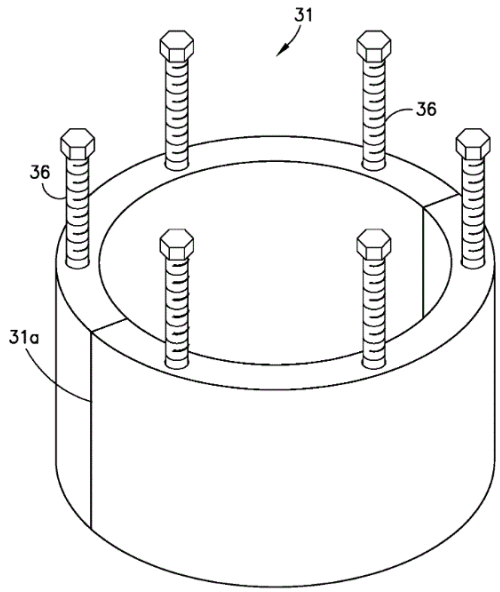

21: 2022/09826. 22: 2022/09/02. 43: 2023/04/12
51: A61K; A61P
71: VALNEVA AUSTRIA GMBH
72: MEINKE, Andreas, MÖHLEN, Michael, SCHLEGL, Robert, HEINDL-WRUSS, Jürgen
33: US 31: PCT/US21/20313 32: 2021-03-01
33: EP 31: 20168324.0 32: 2020-04-06
33: EP 31: 20202118.4 32: 2020-10-15
33: EP 31: 20211853.5 32: 2020-12-04
33: EP 31: 21154647.8 32: 2021-02-01
33: EP 31: 21160913.6 32: 2021-03-05
54: INACTIVATED SARS-COV-2 VIRUS VACCINE
00: -

Described herein are SARS-CoV-2 vaccines and compositions and methods of producing and administering said vaccines to subjects in need thereof.

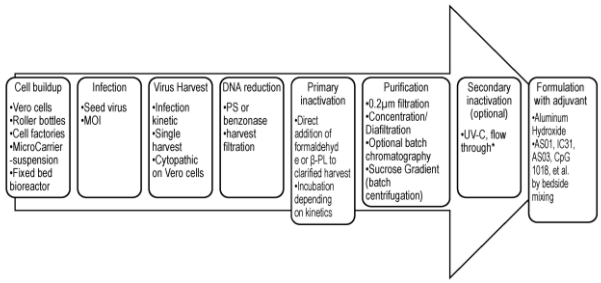

21: 2022/09836. 22: 2022/09/02. 43: 2023/04/03
51: H01M
71: POYNTING ANTENNAS (PTY) LIMITED
72: FOURIE, Andries, Petrus, Cronje
33: ZA 31: 2020/01492 32: 2020-03-10
54: BATTERY ASSEMBLY
00: -
A battery assembly (10) comprises a shell (12) made of a first material and which shell defines a chamber (14). A plurality of discrete battery cells (16.1 to 16.n) are housed in the chamber and are electrically interconnected with one another. At least some of the battery cells are spaced from one another. A solid cell protecting medium (18) of a second material, which is different from the first material, at least partially fills a space (20) between the at least some of the battery cells.

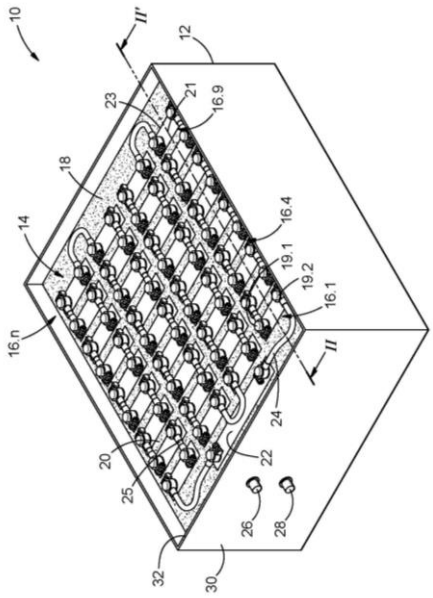

21: 2022/09891. 22: 2022/09/05. 43: 2023/04/03
51: A61K; C07D; A61P
71: BEIGENE, LTD.
72: WANG, Zhiwei, GUO, Yunhang, XUE, Hai
33: CN 31: PCT/CN2020/084992 32: 2020-04-15
33: CN 31: PCT/CN2020/100472 32: 2020-07-06
33: CN 31: PCT/CN2020/125580 32: 2020-10-30
33: CN 31: PCT/CN2021/075831 32: 2021-02-07
33: CN 31: PCT/CN2021/086189 32: 2021-04-09
54: BCL-2 INHIBITOR
00: -
Disclosed herein is a compound of Formula (I) for inhibiting both Bcl-2 wild type and mutated Bcl-2, in particular, Bcl-2 G101V and D103Y, and a method of using the compound disclosed herein for treating dysregulated apoptotic diseases.

21: 2022/09922. 22: 2022/09/06. 43: 2023/04/03
51: C10B; C10G; C10K; F23B
71: STELLENBOSCH UNIVERSITY
72: GÖRGENS, Johann Ferdinand, STANDER, Adam Johannes, KNOETZE, Johannes Hendrik, DU PREEZ, Louis Jacobus, FARZAD, Somayeh
33: ZA 31: 2021/06492 32: 2021-09-06
54: SYSTEM AND PROCESS FOR DESULPHURISATION OF PYROLYSIS FEEDSTOCKS
00: -
The invention provides a desulphurisation system for at least partially removing a sulphur compound such as H2S from a sulphur-containing organic feedstock

such as scrap tyres. The desulphurisation system comprises an inert heating reactor or chamber, an inert gas delivery system and a vapour transfer component. The heating reactor is configured to heat the sulphur-containing organic feedstock to a desulphurisation temperature of 300 ºC or lower under an inert atmosphere, which liberates a volatile component containing the sulphur compound. The vapour transfer component transfers the volatile component downstream while leaving behind a desulphurised feedstock residue. The gas delivery system is connected to the heating reactor and provides the inert atmosphere in the heating reactor. The invention extends to a pyrolysis reaction system which includes the described desulphurisation system and a pyrolysis reactor configured to perform a pyrolysis reaction of the residue, typically at a temperature higher than the desulphurisation temperature.

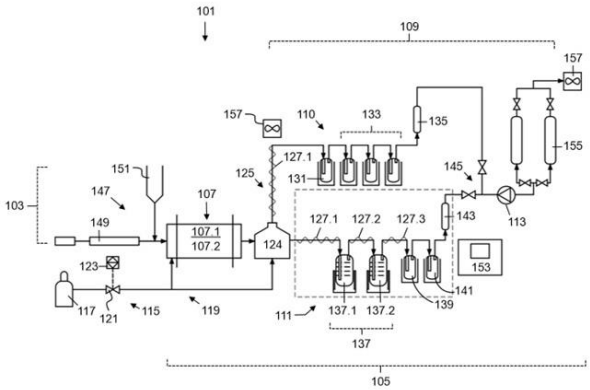

21: 2022/09962. 22: 2022/09/07. 43: 2023/04/04
51: A61K; C07D; A61P
71: BEIGENE, LTD.
72: WANG, Hexiang, WANG, Zhiwei, LEI, Bailin, HUO, Changxin, SUN, Dongqing, CHEN, Jie, WANG, Yucheng
33: CN 31: PCT/CN2020/088322 32: 2020-04-30
33: CN 31: PCT/CN2021/085369 32: 2021-04-02
54: DEGRADATION OF BRUTON'S TYROSINE KINASE (BTK) BY CONJUGATION OF BTK INIDBITORS WITH E3 LIGASE LIGAND AND METHODS OF USE
00: -
Bifunctional compounds formed by conjugating BTK inhibitor moieties with E3 ligase ligand moieties, which function to recruit targeted proteins to E3 ubiquitin ligase for degradation, and methods of preparation and uses thereof.

21: 2022/09981. 22: 2022/09/07. 43: 2023/03/24
51: H04N
71: GUANGDONG OPPO MOBILE TELECOMMUNICATIONS CORP., LTD.
72: WAN, Shuai, GONG, Hao, RAN, Qihong, HUO, Junyan, MA, Yanzhuo
54: IMAGE PREDICTION METHOD, ENCODER, DECODER AND STORAGE MEDIUM
00: -
Disclosed are an image prediction method, an encoder, a decoder, and a storage medium. The method comprises: performing motion estimation on an image block to be encoded, and determining unidirectional prediction values, respectively corresponding to two prediction directions, of the image block; determining a gradient parameter corresponding to the image block, wherein the gradient parameter comprises at least a gradient flag value and a gradient direction index value; calculating the gradient value of the image block by using the determined gradient parameter and the unidirectional prediction values respectively corresponding to the two prediction directions; and correcting an initial bidirectional prediction value according to the gradient value of the image block and a preset correction intensity value to obtain a bidirectional prediction value of the image block, wherein the initial bidirectional prediction value is a weighted sum of the unidirectional prediction values respectively corresponding to the two prediction directions.

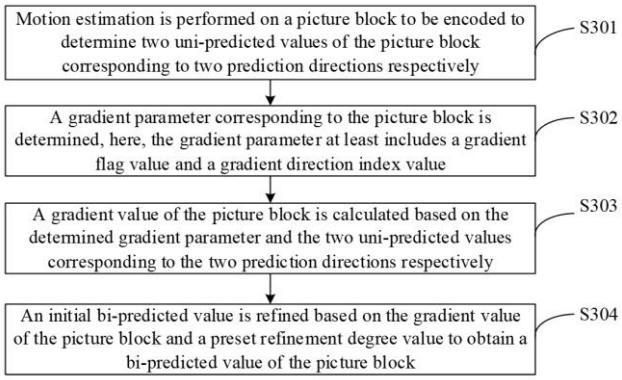

21: 2022/09992. 22: 2022/09/07. 43: 2023/04/05
51: C01B; C01G; C08B; C08J; C09D; D21H
71: GREEN SOL-GEL LTD
72: ISMAIL, Fanya
54: SOL APPLICATION METHODS
00: -

A method comprising providing a sol comprising a solvent; contacting the sol with a precipitation initiator to initiate precipitation of the sol, wherein the precipitation initiator is different to the solvent; and applying the precipitating sol to a product. The methods of the invention may be used with sols comprising a solvent, a metal alkoxide, and optionally a biopolymer and/or a catalyst, with alkoxides comprising metals, organically modified alkoxides comprising metals, alkoxides comprising metalloids, and organically modified alkoxides comprising metalloids all being encompassed by the term 'metal alkoxide'. Also disclosed is an apparatus for use in the method comprising a first storage vessel; a second storage vessel; one or more pumps; and one or more delivery means.

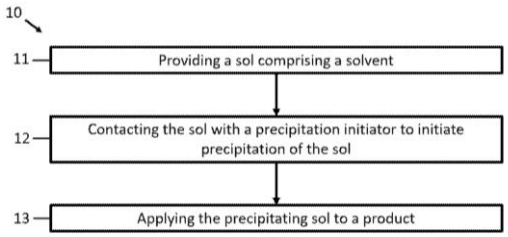

21: 2022/10103. 22: 2022/09/12. 43: 2023/05/12
51: A23G
71: EMMERSON, Brett Raymond
72: EMMERSON, Brett Raymond
54: PREPARATION OF A CONFECTIONERY
00: -
The invention relates to the preparation of a confectionery. The process involves combining quantities of honey, water and pectin to form a mixture. The honey-water-pectin mixture is boiled to form a thick syrup before being allowed to set for a predetermined time at a predetermined temperature and humidity level. Once set, the mixture is cut into a plurality of shaped confectioneries and left to cure for a predetermined time at a predetermined temperature and humidity level. In other variations, the confectionery includes additional flavourants in which one or more liquid and/or powdered flavourants are added to the mixture during the preparation process.

21: 2022/10203. 22: 2022/09/14. 43: 2023/03/16
51: H04W
71: ZTE Corporation
72: ZHANG, Shujuan, LU, Zhaohua, GAO, Bo, JIANG, Chuangxin, LI, Yu Ngok, WU, Hao, KOU, Shuaihua
33: CN 31: 202010093882.6 32: 2020-02-14
54: METHODS FOR RECEIVING AND SENDING CONTROL SIGNALING, AND COMMUNICATION NODE
00: -
Disclosed herein are methods for receiving and sending control signaling, and a communication node. The method for receiving a control signaling comprises: receiving a first control signaling, the first control signaling comprising a first type parameter that corresponds to a measurement reference signal, and the first type parameter comprising a PCI or a PCI and a second type parameter, wherein the measurement reference signal comprises one of the following: a measurement reference signal in a CSI reporting configuration, a measurement reference signal comprised by a measurement result in a UCI, a measurement reference signal in a measurement reference signal resource set configured in a service cell, and a measurement reference signal in a beam failure candidate reference signal resource set.

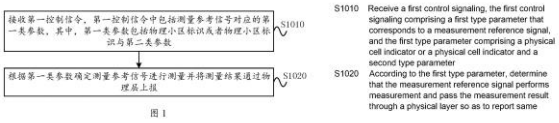

21: 2022/10246. 22: 2022/09/15. 43: 2023/03/17
51: B01D C02F E03B
71: DRIPDROPUSA, INC.
72: FLORES, Robert, Jesse
33: US 31: 16/795,298 32: 2020-02-19
54: ATMOSPHERIC WATER GENERATING APPARATUS AND SYSTEMS FOR PRODUCING WATER FROM MOISTURE-LADEN AIR
00: -
An apparatus (10) and system (12) for producing fresh water (22) from moisture-laden air (14). The apparatus (10) has a frame (20) supporting a plurality of condensation panels 18 that each have a panel body (64) defining a first condensation surface (28) and second condensation surface (30) that will contact the moisture-laden air (14). A panel support mechanism (94) supports each of the condensation panels (18) in spaced apart relation to each other so each condensation surface (28/30) contacts moisture-laden air (14). A flow channel (78) inside the panel body (64) defines a flow path (80) for a

cooled fluid (82) that cools the condensation surfaces (28/30) so the moisture-laden air (14) will produce condensate (17) thereon that collects as fresh water (22). The system (12) includes a plurality of apparatuses (10), a chilling mechanism (122) to cool the cooled fluid (82), an inlet line (104) and discharge line (106) connecting the chilling mechanism (122) and apparatuses (10), pumps (116) to pressurize the cooled fluid (82), fans (118) to move the moisture-laden air (14), and water collecting surfaces (24) to collect the fresh water (22).

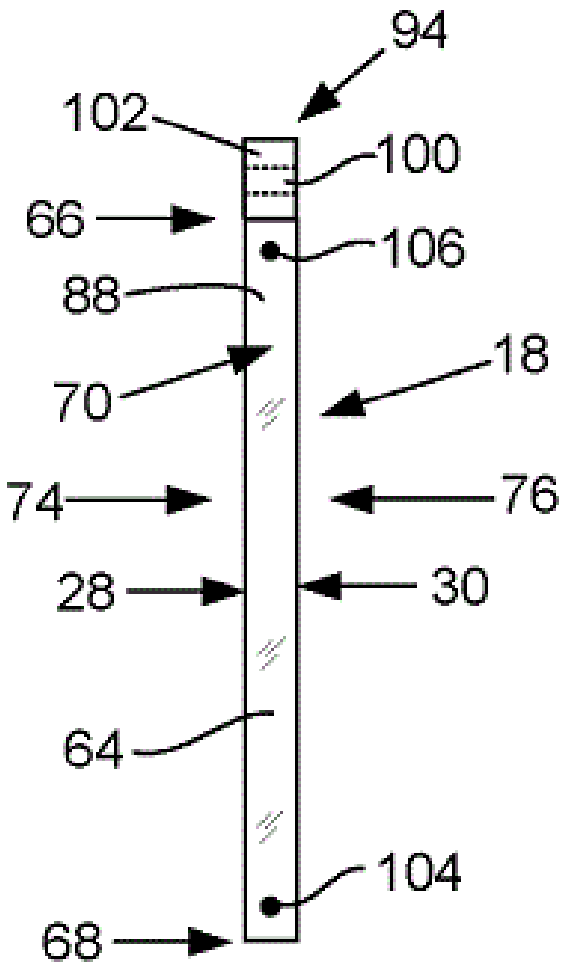

21: 2022/10396. 22: 2022/09/20. 43: 2023/04/12
51: H02H
71: VAN HEERDEN, Anton
72: VAN HEERDEN, Anton
54: MODIFIED SURGE ARRESTOR AND ADAPTER
00: -

A method of modifying a surge arrestor, a modified surge arrestor, and an adapter for modifying a surge arrestor is provided. The method includes permanently attaching an adapter to the surge arrestor wherein the adapter has an articulated electric contact assembly at or towards an end of the surge arrestor that is to be grounded in use, the articulated electric contact assembly being configured for releasable co-operation with a co-operant electric contact carried by a support therefor such that the surge arrestor is either operatively bridging between a live terminal and a grounded co-operant electric contact or is suspended by the co-operant electric contact in a dropped out condition, and attaching an electrical contact at an operatively live opposite end of the surge arrestor for releasable engagement with a co-operating leaf contact such that the modified surge arrestor may serve as a drop out surge arrestor.

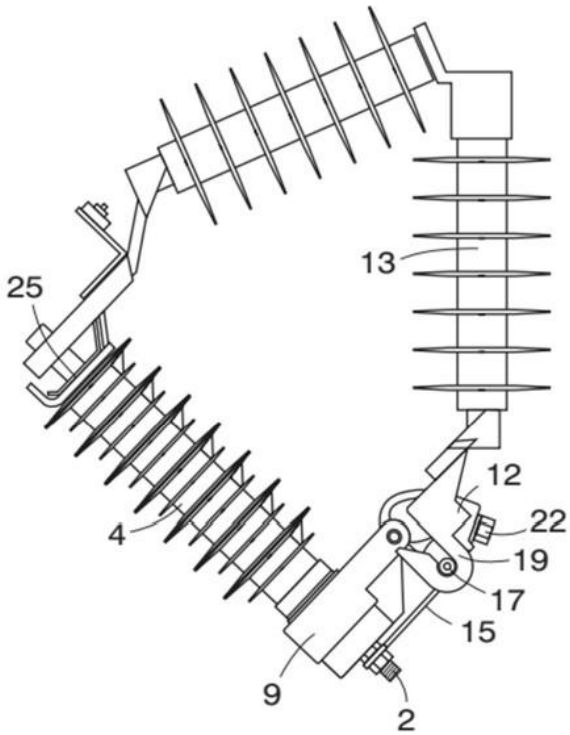

21: 2022/10401. 22: 2022/09/20. 43: 2023/04/12
51: A61K
71: Henan Province Hospital of TCM
72: MA Chunzheng, ZHAO Xinrui, XU Yanchao, MA Xijia, CHENG Zhenyang, LIU Ya'nan, LI Honglin, CHENG Hong
33: CN 31: 2022106468645 32: 2022-06-09

54: PAIN-RELIEVING GRAIN-MOXIBUSTION MEDIUM AND ITS PREPARATION METHOD
00: -
The invention discloses a pain-relieving grain-moxibustion medium and its preparation method, and relates to the technical field of traditional Chinese medicines. The invention discloses a traditional Chinese medicine prescription for relieving pain, which comprises the following components in parts by weight: 40-80 parts of Astragalus membranaceus, 40-80 parts of Angelica sinensis, 20-50 parts of Carthamus tinctorius, 40-80 parts of Corydalis yanhusuo, 30-60 parts of Cyperus rotundus (fried), 30-60 parts of Asarum, 20-50 parts of Clematis chinensis, and 20-50 parts of Agkistrodon halys, 20-50 parts of Ramulus Mories, 10-30 parts of Aconitum carmichaeli and 150-300 parts of ginger. The invention also provides a pain-relieving grain-moxibustion medium, which is an ointment prepared from the traditional Chinese medicine formula. According to the invention, the ointment prepared by the traditional Chinese medicine formula replaces the skin-moistening ointment and the like as the medium of grain-moxibustion, so that the analgesic effect of grain-moxibustion can be effectively improved.

21: 2022/10404. 22: 2022/09/20. 43: 2023/04/12
51: A47B
71: Jiangxi Sunshine Safety Equipment Group Co., Ltd.
72: Haixin Ding
33: CN 31: 202210476671.X 32: 2022-04-30
54: EASY-TO-EXTRACT BOOK COMPACT SHELF
00: -
The present disclosure relates to a compact shelf, in particular to an easy-to-extract book compact shelf. The present disclosure provides an easy-to-extract book compact shelf through which users are convenient to take out desired books accurately. An easy-to-extract book compact shelf includes a shell, first sliding rails, first sliding blocks, first springs, an extracting mechanism and the like, wherein five first sliding rails are uniformly arranged inside an upper part of the shell at intervals, the first sliding rails are all slidingly provided with the first sliding blocks for placing books, the first springs are connected between lower parts of rear sides of the first sliding blocks and the first sliding rails at the same side, and the extracting mechanism is arranged at a lower part inside the shell. In the present disclosure, pedals of corresponding books are stepped, so that the pedals can drive second racks to move downwards, first racks and components on the first racks are driven to move upwards through gears, screw rods are driven to rotate through a motor output shaft, and a pushing block drives the first sliding blocks and the corresponding books to move forwards, so that the users are convenient to take out the desired book accurately.

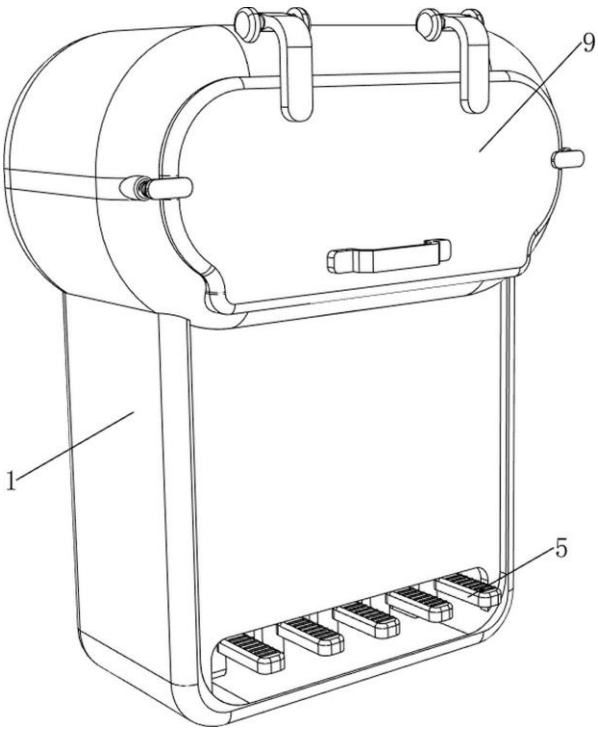

21: 2022/10407. 22: 2022/09/20. 43: 2023/04/12
51: A61K; A61P
71: IFREMER, CENTRE NATIONAL DE LA RECHERCHE SCIENTIFIQUE (CNRS), CHU NANTES, UNIVERSITÉ DE LIMOGES, UNIVERSITÉ DE LA ROCHELLE
72: BERARD, Jean-Baptiste, LEFOULON, Louise, PICOT, Laurent, OUK, Tan-Sothea, SAAD, Naïma, LANDOLT, Cornelia, GRENIER, Karine, SOL, Vincent
33: FR 31: 2003712 32: 2020-04-14
54: USE OF A POLAR EXTRACT OF SKELETONEMA IN PHOTODYNAMIC THERAPY
00: -
The invention relates to a dermatological composition comprising at least one polar extract of an alga of the Skeletonema genus or a

photosensitizer derived therefrom, for the treatment of acne or bacterial infections; as well as a process for decontaminating a surface using a polar extract of an alga of the Skeletonema genus or a photosensitizer derived therefrom.

21: 2022/10418. 22: 2022/09/20. 43: 2023/04/13
51: B62D
71: ARCELORMITTAL
72: Jean-Louis COLMONT, Thierry DERCHU, Edith LAHELLEC
54: STRUCTURAL NODE FOR A MOTOR VEHICLE FRONT LOWER LOAD PATH, AND PROCESS FOR ASSEMBLING SAID STRUCTURAL NODE.
00: -
The invention relates to a structural components node (9) comprising a crash box connector (14) and a crash extender connector (13) each having a top plate extending in a substantially horizontal plane and allowing to secure directly together the crash extender (7) and the crash box (8). Advantageously, said structural components node (9) can further optionally comprise connections with a hanger (10) and a front transverse member (11). By applying the invention, it is possible to reduce the amount of welding operations needed to assemble said structural components node (9) and to provide a robust structural components node (9) ensuring a high structural strength to the assembly and an efficient cooperation between the lower and middle load paths and between the left and right side of the vehicle in case of a front impact. Finally, the invention relates to a process of assembling such a structural components node (9).

Fig. 3

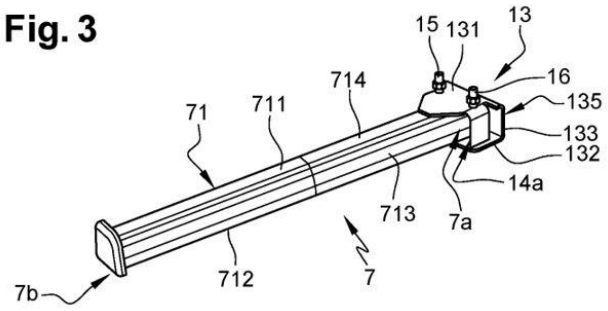

21: 2022/10419. 22: 2022/09/20. 43: 2023/03/24
51: C07K
71: ÖSTERREICHISCHE AGENTUR FÜR GESUNDHEIT UND ERNÄHRUNGSSICHERHEIT GMBH
72: HARTMANN, Boris
33: EP 31: 20169787.7 32: 2020-04-16
54: INFLUENZA VIRUS-LIKE PARTICLES (VLPs)
00: -
Disclosed are influenza virus-like particles (VLPs), wherein the VLPs comprise: - hemagglutinin (HA) protein and neuraminidase (NA) protein on the surface of the VLPs, - a nucleoprotein (NP) ribonucleoprotein complex, wherein the VLPs do not contain a ribonucleoprotein complex of at least one of PB1, PB2, and NS.

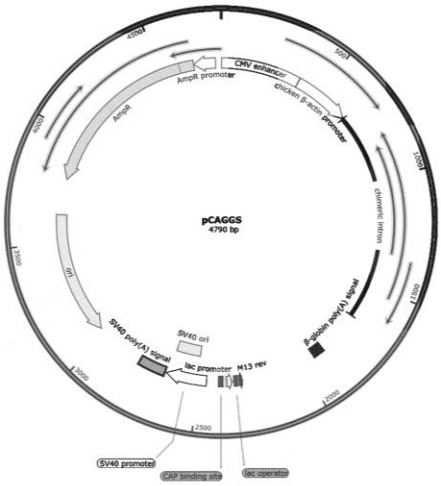

21: 2022/10463. 22: 2022/09/21. 43: 2023/04/17
51: B25D; E21B
71: MONTABERT
72: ESCOLLE, Michel, CHERVIN, Gilbert
33: FR 31: FR20/03324 32: 2020-04-02
54: ROTARY PERCUSSIVE HYDRAULIC DRILL PROVIDED WITH A SHANK EQUIPPED WITH COUPLING SPLINES
00: -
A rotary percussive hydraulic drill (2) comprises a body (3); a shank (13) having female coupling splines and male coupling splines; a percussion piston (5) configured to strike the shank; a rotational-drive device (18) configured to drive the shank in rotation; a front stop surface (23) against which the shank (13) is configured to come into abutment. The shank (13) has an annular bearing flange (24) which is provided on an outer surface of the shank (13) and which has an annular bearing surface configured to come into abutment against the front stop surface (23). Each of the female and male

coupling splines provided on the shank (13) extends from the annular bearing flange (24) in the direction of the percussion piston (5).

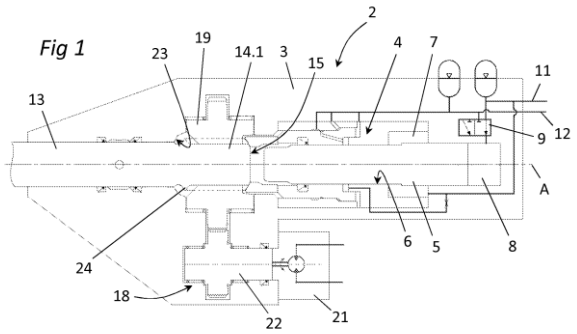

21: 2022/10469. 22: 2022/09/21. 43: 2023/04/13
51: A61K; A61L; B33Y
71: PHARMAPORT PROPRIETARY LIMITED
72: MARAIS, Johann
33: ZA 31: 2020/01855 32: 2020-03-24
54: A NOVEL WOUND GEL COMPOSITION
00: -
The present invention provides several wound gel compositions for accelerating wound healing and to limit scarring. The present invention also relates to wound gel compositions that can be used as a growth medium for new skin for use in cosmetic skin growth and cosmetic skin rejuvenation.

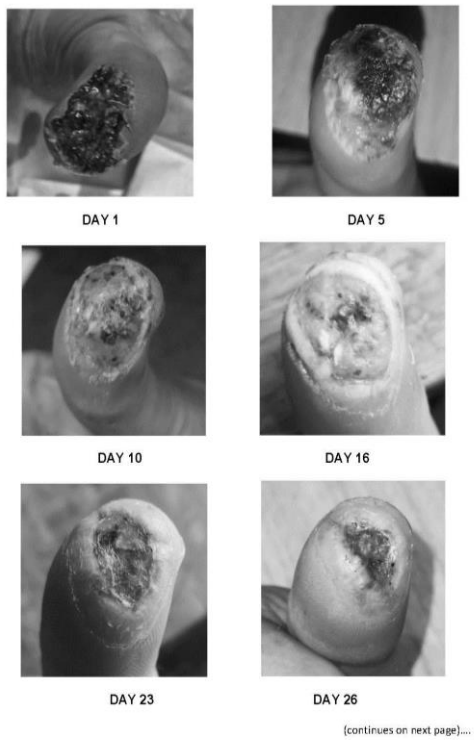

21: 2022/10481. 22: 2022/09/21. 43: 2023/03/17
51: A61P; C07K; C12N
71: Huahui Health Ltd., National Institute of Biological Sciences, Beijing
72: LI, Wenhui, QI, Yonghe, CHEN, Jianhe, SUI, Jianhua, LIU, Juan, MAO, Fengfeng, LIU, Ximing
33: CN 31: 202010124368.4 32: 2020-02-27
54: SOLUBLE ACE2 AND FUSION PROTEIN, AND APPLICATIONS THEREOF
00: -
Soluble ACE2 and a truncated form thereof, a fusion protein thereof and preparation methods therefor. Soluble ACE2 and a truncated form thereof, as well as a use of the fusion protein in the preparation of a medicine for ACE2-related diseases.

21: 2022/10488. 22: 2022/09/21. 43: 2023/03/24
51: A61B; A61N
71: Pathy Medical, LLC
72: SILVER, Mikiya, KLEYMAN, Gennady, PATHY, Vinod V.
33: US 31: 63/010,950 32: 2020-04-16
54: THERAPEUTIC LIGHTING DEVICES AND METHODS
00: -
A device for treating biological tissue including a body having opposed proximal and distal end

portions, a shroud extending from the distal end portion of the body, and a light source supported at a distal end of the body and connected to a power source for emitting therapeutic light to treat biological tissue proximate to the shroud, wherein the shroud is dimensioned and configured to establish an effective distance and area of therapeutic light treatment relative to the biological tissue to be treated.

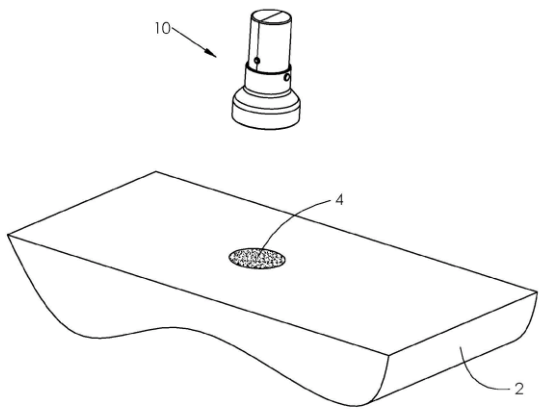

21: 2022/10514. 22: 2022/09/22. 43: 2023/05/12
51: E21F; G01B; G01D
71: Mining Product Development Manufacturing (Pty) Ltd
72: PIENAAR, Frans Roelof Petrus, HOWELL, Mark
33: ZA 31: 2021/04272 32: 2021-06-22
54: NON-SUPPORTING TELESCOPING CLOSURE MONITORING POST
00: -
This invention relates to a structurally non-supporting distance monitoring post 10 that finds application in monitoring closure in underground mining. The post 10 comprises telescoping tubes 12, 14 that are biased apart, to the extended condition of the post 10, by resiliently deformable bias means, for example rubber bands. The post 10 includes a linear transducer (preferably the transducer of SA Patent No. 2021/06038) that produces a linear separation signal corresponding to variation in the linear separation of the ends of the post from one another and, hence the linear separation of the post engagement surfaces (typically the hanging and foot wall in the mining panel). Programmable logic means is provided and programmed to monitor the linear separation signal and to produce an alert in the event that the linear separation signal exceeds a programmed signal threshold value.

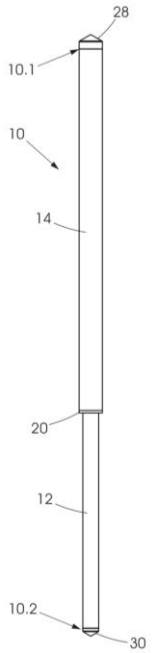

21: 2022/10539. 22: 2022/09/22. 43: 2023/03/24
51: H04N
71: Huawei Technologies Co., Ltd.
72: WANG, Biao, ESENLIK, Semih, ALSHINA, Elena Alexandrovna, KOTRA, Anand Meher, GAO, Han
33: PCT/EP(DE) 31: 2020/057229 32: 2020-03-17
54: AN ENCODER, A DECODER AND CORRESPONDING METHODS
00: -
A method of decoding of a video or picture bitstream implemented by a decoding device, wherein the bitstream including data representing a current video coding layer, the method comprising when determining that the current video coding layer is the only one layer in the bitstream, using the identifier of a NAL unit of the current video coding layer as the identifier of the current video coding layer.

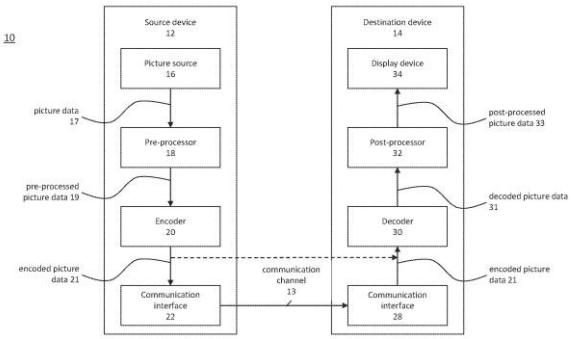

21: 2022/10540. 22: 2022/09/22. 43: 2023/04/12
51: C25B; H01M; H02J; G06Q
71: LAND BUSINESS CO.,LTD.
72: KAMEI Masamichi
33: JP 31: 2020-036883 32: 2020-03-04
54: WIDE-AREA POWER SUPPLY SYSTEM
00: -
A wide-area power supply system 1 of the present invention has a small impact on the environment and is highly economical, as a wide-area power supply network that uses hydrogen energy without requiring conventional transmission towers, etc., the wide-area power supply system comprising: a primary power plant 1; a hydrogen production facility 2 which produces hydrogen by using electricity from the primary power plant 1; a primary hydrogen storage facility 3 distributed over a wide area; a secondary hydrogen storage facility 4 distributed for each primary hydrogen storage facility 3; a regional power grid 6 which sends power to power consuming facilities or dwelling units in a residential area; a secondary power generation facility 5 which is installed in the residential area and converts hydrogen transported via the primary hydrogen storage facility 3 or the secondary hydrogen storage facility 4 into electric power; and a transportation means such as a trailer 7 for transporting hydrogen between the hydrogen production facility 2 and the primary hydrogen storage facility 3, between the primary hydrogen storage facility 3 and the secondary hydrogen storage facility 4, and between the primary hydrogen storage facility 3 or the secondary hydrogen storage facility 4 and the secondary power generation facility 5.

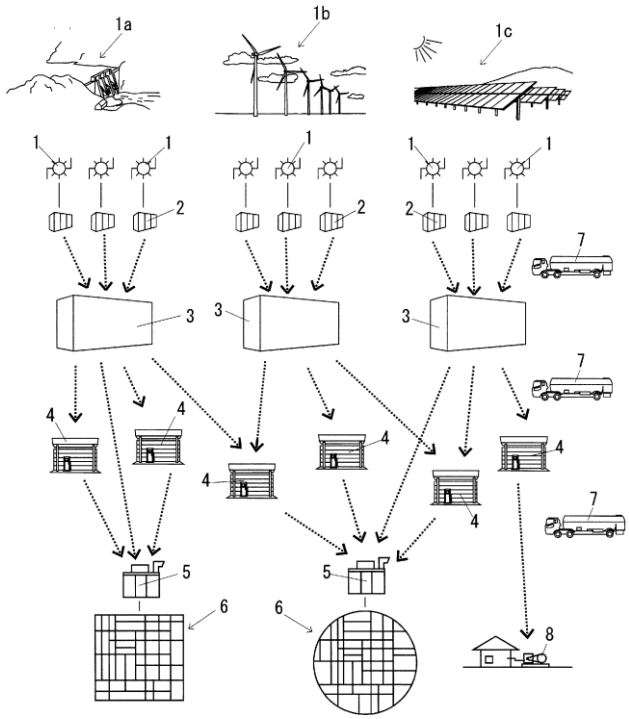

21: 2022/10547. 22: 2022/09/22. 43: 2023/03/24
51: E21D; G01L
71: Timrite (Pty) Ltd
72: PIENAAR, Frans Roelof Petrus, HOWELL, Mark
33: ZA 31: 2021/04264 32: 2021-06-22
54: SUPPORT STATUS INDICATOR AND GROUND MOVEMENT EARLY WARNING DEVICE
00: -
A warning system 10 intended for use in conjunction with mine supports 12 in underground mines. The warning system 10 comprises a housing 14 secured to the upper end of a mine support 12. The free end of the housing 14 is closed by means of a resiliently deformable domed end cap. A load cell is secured to the underside of the domed end cap 18, where it is acted on by a pressure element that bears against the spring element of the load cell and transfers compressive force applied to the domed end cap to the spring element. The warning system 10 includes programmable logic means programmed to monitor the compressive force applied to the spring element and to produce an alert signal in the event that the compressive force exceeds a programmed compressive force value.

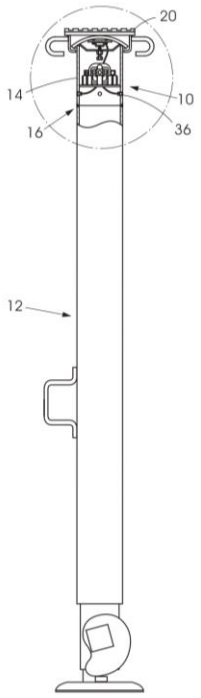

21: 2022/10571. 22: 2022/09/23. 43: 2023/04/12
51: B60H
71: VENTER, Francois
72: VENTER, Francois
33: ZA 31: 2020/01159 32: 2020-02-25
54: VEHICLE INSTALLATIONS
00: -
The Invention provides a vehicle installation for vehicle cooling. The vehicle installation includes an air inlet towards a front end of a vehicle, an air outlet towards a rear end of the vehicle, an air duct extending from the air inlet to the air outlet which defines a flow path along a longitudinal direction of the vehicle, and at least one heat exchanger positioned on or in the air duct. The at least one heat exchanger is in thermal communication with air flowing through the air duct, thereby providing vehicle cooling when in use. The invention further provides vehicle installations, as described, further having turbines and/or reduction arrangements for electricity generation.

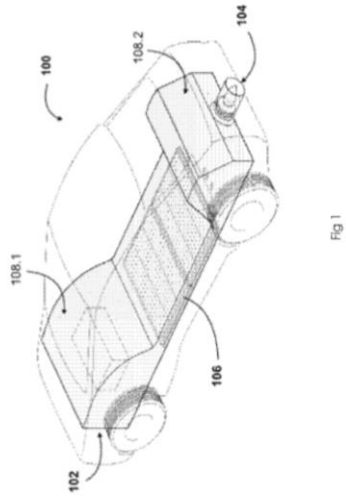

21: 2022/10586. 22: 2022/09/23. 43: 2023/03/17
51: A61K
71: Nutrivert LLC
72: NALLE, Jr., Horace Disston, KALTENBOECK, Bernhard
33: US 31: 63/000,364 32: 2020-03-26
54: LIPOPHILIC ENANTIOMERS OF DESACETYLGLUCOSAMINE MURAMYL DIPEPTIDE WITH ANTI-INFLAMMATORY AND GROWTH PROMOTING ACTIVITY
00: -
Compositions of matter and methods to reduce inflammation in vertebrates and to promote growth and feed conversion in animals by administering an effective amount of a composition containing a mirror image molecule (enantiomer) of a lipophilic muramyl dipeptide (MDP) derivative that does not contain the N-acetylglucosamine moiety of MDP (i.e., a desmuramyl dipeptide).

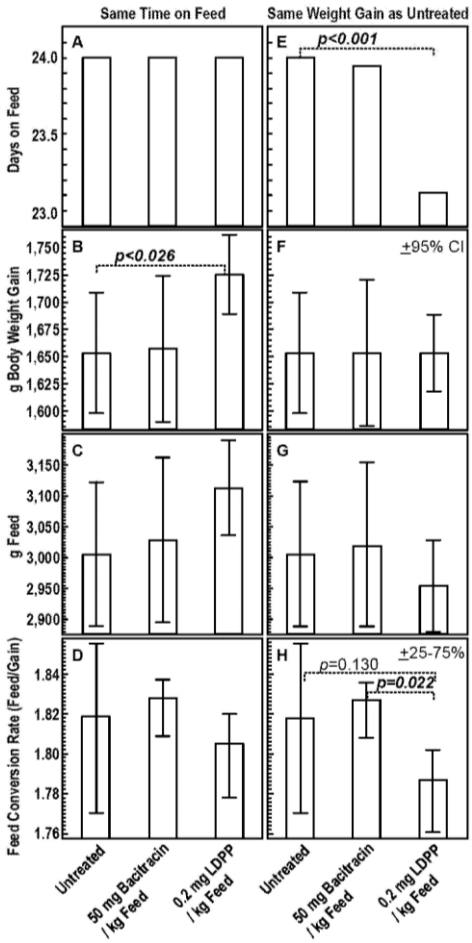

21: 2022/10685. 22: 2022/09/27. 43: 2023/04/14
51: B02C
71: BELKE, Jeffrey Victor
72: BELKE, Jeffrey Victor
33: AU 31: 2020901118 32: 2020-04-08
54: DRIVE MECHANISM FOR A CRUSHER
00: -
There is disclosed a crusher for crushing material into finer particulates. The crusher includes a housing enclosing a cone assembly comprising a crushing head mounted on a shaft. The housing supports an outer crushing shell, while the crushing head supports an inner crushing shell. The two crushing shells cooperate to form a crushing gap therebetween. A cam is provided on the shaft with the cam being located remote from the crushing head. A number of drive units extend between the cam and the housing, wherein each drive unit has a first end movably abutting the cam and a second end movably abutting a discrete spherically domed reaction seat provided on the housing. Each drive unit is a telescopic body with a bore extending therethrough so that hydraulic fluid injected into each bore applies a drive force onto the cam and the reaction seat to cause movement of the crushing head.

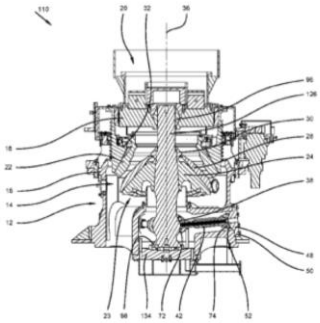

21: 2022/10686. 22: 2022/09/27. 43: 2023/04/14
51: C12Q; G01N
71: CENTRUM MEDYCYNY KLINICZNEJ DIMEDICAL SP. Z O.O.
72: DRUSZCZYNSKA, Magdalena, MAJEWSKI, Karol, SZEWCZYK, Rafal, KOWALSKI, Konrad
33: EP 31: 20461564.5 32: 2020-09-30
54: A METHOD FOR DETECTING PRESENCE OF MYCOBACTTERIA SPECIES IN A TEST SAMPLE
00: -
A method for detecting a presence of mycobacterium species in a test sample by subjecting the test sample to a liquid chromatographic-tandem mass spectrometry (LC-MS/MS).

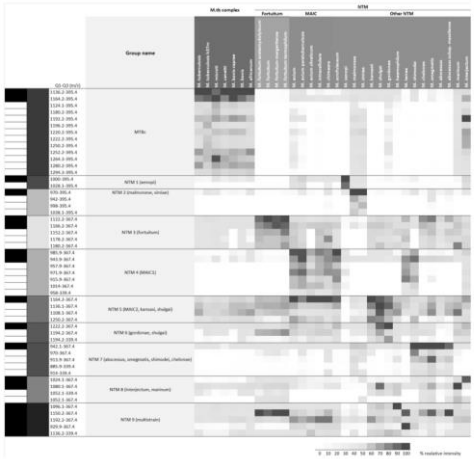

21: 2022/10687. 22: 2022/09/27. 43: 2023/04/12

51: C12N; C12P
71: LYTEGRO LIMITED
72: LEE, Andrew John
33: GB 31: 2003765.1 32: 2020-03-16
54: A METHOD OF ENHANCING ETHANOL FERMENTATION
00: -
A method of forming an ethanol fermentation enhancement mixture is provided. The method comprises the steps of: hydrating a dried yeast with at least 0.1% Baclyte or a banana extract by volume, and a yeast growth media to produce a pre-fermentation mixture; and maintaining the pre-fermentation mixture at a temperature between 20ºC and 40ºC for between 30 minutes and 8 hours to form the enhancement mixture. The further method of forming an ethanol 10 enhancement mixture is also provided. The method comprises the steps of: providing a solution of hydrated activated yeast; supplementing the solution of hydrated activated yeast with 0.1% to 25% BacLyte or banana extract by volume; and maintaining the solution of hydrated activated yeast at a temperature between 20ºC and 40ºC for between 30 minutes and 8 hours to form the enhancement mixture. A fermentation method is also provided. The method comprises the 15 steps of preparing an ethanol enhancement mixture; adding the enhancement mixture to a bulk fermentation mixture containing a sugar source; and maintaining the bulk fermentation mixture at temperature of between 2°C and 40° to allow fermentation of the sugar source to ethanol.

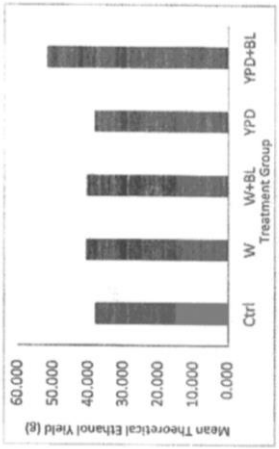

Figure 6: Theoretical mean alcohol yields from fermentations.

21: 2022/10745. 22: 2022/09/28. 43: 2023/04/13

51: C12N
71: CEVEC PHARMACEUTICALS GMBH
72: CORONEL, Juliana, WISSING, Silke
33: EP 31: 20209811.7 32: 2020-11-25
54: METHOD FOR THE PRODUCTION OF AAV
00: -
The present invention relates to methods for the production of Adeno-associated virus (AAV), comprising steps of providing a stable AAV producer cell line in which at least some or all genes encoding the components necessary for the production of AAV are stably integrated into the cell genome, and culturing said cells in perfusion culture during the AAV production step (i.e., during the N step), wherein said perfusion culture encompasses continuous replacement of spent media with fresh media, and wherein said continuous replacement of spent media with fresh media continues after the induction of AAV production.

21: 2022/10773. 22: 2022/09/29. 43: 2023/04/17
51: A61K; C07D; A61P
71: BEIGENE, LTD
72: LI, Jing, WANG, Zhiwei, SONG, Fengtao
33: CN 31: PCT/CN2020/094309 32: 2020-06-04
33: CN 31: PCT/CN2020/119974 32: 2020-10-09
33: CN 31: PCT/CN2020/134610 32: 2020-12-08
54: PYRIDO[2,3-B] [1,4] OXAZINES OR TETRAHYDROPYRIDO[2,3-B][1,4] OXAZEPINES AS IAP ANTAGONISTS
00: -
Disclosed herein are novel 2,3-dihydro-1H-pyrido[2,3-b][1,4] oxazine or 1,2,3,4-tetrahydropyrido[2,3-b][1,4]oxazepine derivatives used as antagonists of IAPs (Inhibitors Apoptosis Proteins), also known as Smac mimetics. Disclosed herein is the use of these antagonists for inducing or sensitizing cells to the induction of apoptotic cell death, and the use of such compounds for treating proliferative disease such as cancer.

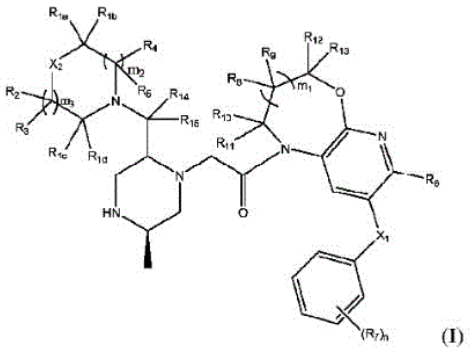

(I)

21: 2022/10780. 22: 2022/09/29. 43: 2023/04/13
51: B65G; G05B
71: KRÄMER AG
72: RÜTTI, Mario, FRECH, Tobias, FISCHER, Horst
33: CH 31: 00466/20 32: 2020-04-21

54: METHOD FOR CHECKING THE FUNCTIONALITY OF A VIBRATORY CONVEYOR DEVICE

00: -

A method for checking the functionality of a vibratory conveyor device (1) by means of a status analysis which is carried out either before operation or during operation of the vibratory conveyor device (1), wherein A) the method to be carried out before operation comprises the following steps: A1) applying a drive pulse to a drive device (2) of the vibratory conveyor device (1); A2) detecting the pulse response caused by the vibratory conveyor device (1); A3) passing on the detected pulse response by way of the signal evaluation unit (5) to a computer (6); A4) comparing the detected pulse response to a reference pulse response by means of the computer (6); and A5) ascertaining by means of the computer (6) whether: a) a starting procedure for operation with reduced starting drive power of the vibratory conveyor device (1) is to be activated, or b) a starting procedure for operation without reduced starting drive power of the vibratory conveyor device (1) is to be activated, or c) the operation is to be suspended; B) the method to be carried out during operation comprises the following steps: B1) detecting the voltage amplitude, frequency, acceleration, and temperature, caused by the vibratory conveyor device (1), in operation of the vibratory conveyor device (1) by means of the signal evaluation unit (5); and B2) passing on the detected voltage amplitude, frequency, acceleration, and temperature by way of the signal evaluation unit (5) to a computer (6).

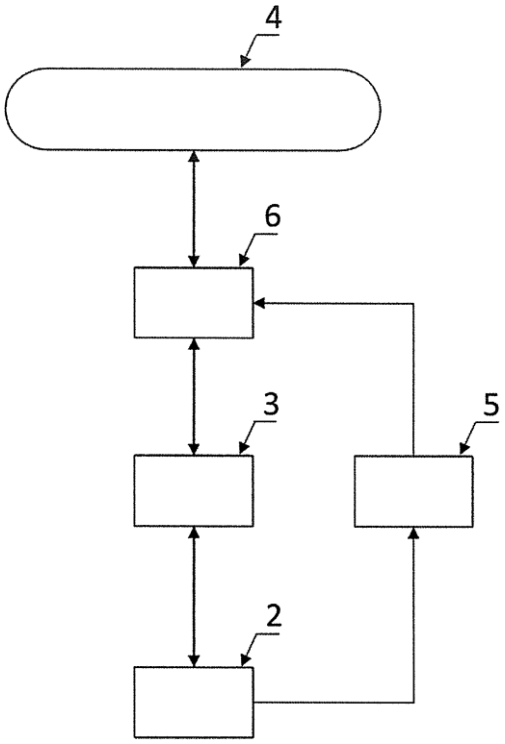

21: 2022/10837. 22: 2022/09/30. 43: 2023/04/13
51: H01B; H01R
71: JILIN ZHONG YING HIGH TECHNOLOGY CO., LTD.
72: WANG, Chao
33: CN 31: 202010250103.9 32: 2020-04-01

54: ELECTRIC ENERGY TRANSMISSION ALUMINUM PART AND MACHINING PROCESS THEREFOR

00: -

Disclosed are an electric energy transmission aluminum part and a machining process therefor. The electric energy transmission aluminum part comprises an aluminum conductive device (1) and an aluminum cable, wherein the aluminum cable comprises an aluminum conductive core (2) and an insulating layer (3) wrapped around a surface of the aluminum conductive core (2), and a section of the aluminum conductive core (2) of the aluminum cable which is exposed where the insulating layer (3) is stripped, and the aluminum conductive core (2) at least partially provided with the insulating layer (3) are crimped in the aluminum conductive device (1); and a transition section (4) with a trapezoidal axial

section is arranged at a junction between the insulating layer (3) and the exposed aluminum conductive core (2) in the aluminum conductive device (1). Taking the transition section (4) as a demarcation point, an inner diameter of an end of the aluminum conductive device (1) that is crimped with the insulating layer (3) is greater than an inner diameter of an end of the aluminum conductive device (1) that is crimped with the aluminum conductive core (2), and at least one concave structure is arranged on the periphery of the aluminum conductive device (1). The concave structure is arranged on a surface of the aluminum conductive device (1), such that the aluminum conductive device (1) can be effectively prevented from moving relative to a clamp, the problem of the aluminum conductive device (1) being displaced or rotated in the clamp during welding is solved, and the welding efficiency and the yield are improved.

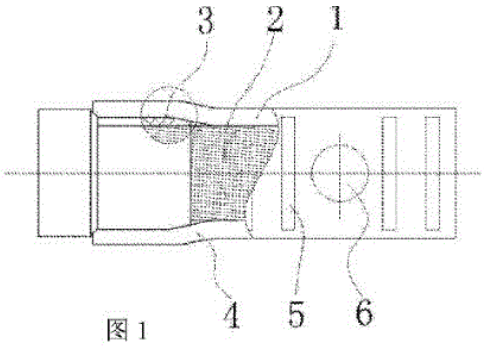

21: 2022/10865. 22: 2022/10/03. 43: 2023/04/18
51: G06Q
71: TAX FINANCIER (PTY) LTD
72: MBANGI, Lelethu, MONGALO, Benedict, ROUX, Alexander Paul
54: A SYSTEM FOR PROVIDING USER-SPECIFIC TAX REFUNDS
00: -
The invention related to a management system for facilitating a user with a tax refund, the system including an electronic database for storing an algorithm; providing the electronic database with the user's financial data through data capturing means; and a method to generate a user-specific refund, wherein the method may include the steps of providing the algorithm with the financial data; allowing the algorithm to calculate risk factors pertaining to the user; and allowing the algorithm to generate the user-specific application using the financial data and the risk factors.

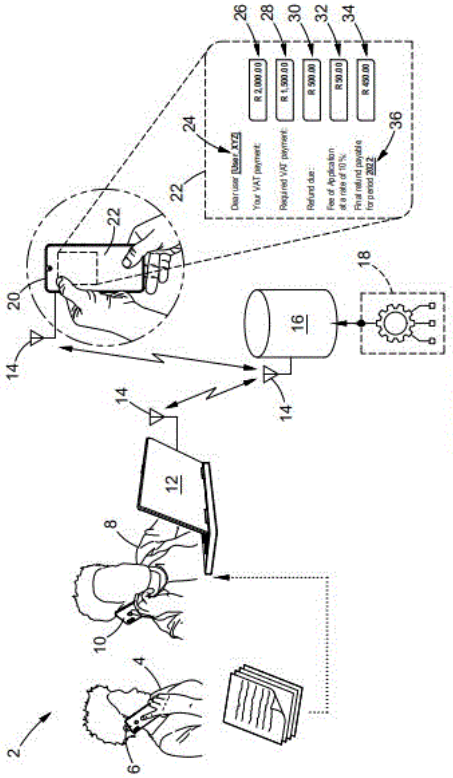

21: 2022/10902. 22: 2022/10/04. 43: 2023/05/04
51: B29C; B60R; H01B; H01R
71: CHANGCHUN JETTY AUTOMOTIVE TECHNOLOGY CO., LTD
72: WANG, Chao
33: CN 31: 202010283020.X 32: 2020-04-10
54: INJECTION-MOLDED WIRE HARNESS AND MOLDING METHOD
00: -
An injection-molded wire harness and a molding method. The wire harness comprises a terminal (1) and at least one conductor (2); one end of the terminal (1) is connected to an electrical loop of an electric device, and the other end of the terminal (1) is connected to the conductor (2); the wire harness is provided with a protection layer (7) which is formed by injection molding and wraps the conductor (2), and at least one positioning device (5) which is formed by injection molding and is used for fixing the position of the wire harness or/and a sealing device (4) for waterproofing. According to the method, manual operations can be reduced, the consistency of wire harness products is improved, the production

cost of the wire harness products is reduced, and the service life of the wire harness is prolonged.

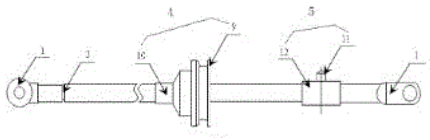

21: 2022/10906. 22: 2022/10/04. 43: 2023/04/24
51: H02M
71: BEIJING GOLDWIND SCIENCE & CREATION WINDPOWER EQUIPMENT CO., LTD.
72: FU, Songge, YUAN, Xiaofeng
33: CN 31: 202010758876.8 32: 2020-07-31
54: POWER COMPONENT OF THREE-LEVEL CONVERTER, THREE-LEVEL CONVERTER AND WIND TURBINE
00: -
The present application discloses a power component of a three-level converter, a three-level converter and a wind turbine. The power component of the three-level converter includes: a first NPC bridge arm unit including a plurality of first NPC bridge arms connected in parallel; a second NPC bridge arm unit including a plurality of second NPC bridge arms connected in parallel; and a third NPC bridge arm unit including a plurality of third NPC bridge arms connected in parallel. The number of the second NPC bridge arms is the same as the number of the first NPC bridge arms, and the number of the third NPC bridge arms is determined based on the ratio of the loss of the first NPC bridge arm to the loss of the third NPC bridge arm. According to embodiments of the present application, the losses of the NPC bridge arm units of the three-level converter can be balanced, such that the losses of the IGBT devices of the three-level converter are evenly distributed.

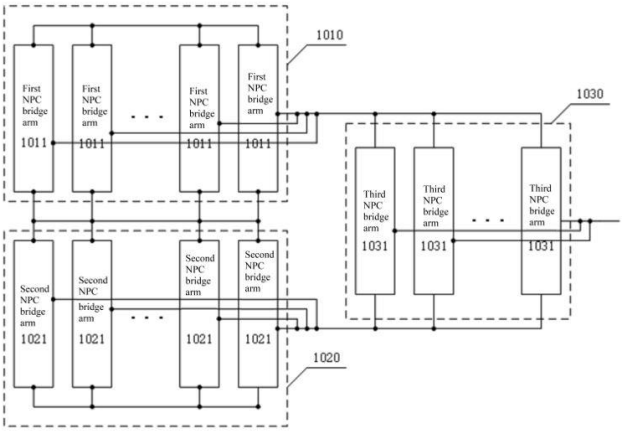

21: 2022/10930. 22: 2022/10/05. 43: 2023/04/20
51: B01F
71: Barend Jacobus BEYLEFELD
72: Barend Jacobus BEYLEFELD
33: ZA 31: 2020/01402 32: 2020-03-05
54: LIQUID AND SLURRY MIXERS
00: -
A mixing vessel comprises a top portion (12) on an inverted conical middle portion (14) and a mixing chamber (16) below the middle portion. A launder (28) surrounds the upper part of the top portion. Solution from the launder is led to a vertical pipe (46) including a motor driven impeller (42) down to the level of the mixing chamber. Two vertically spaced feed pipes (46, 48) lead from the vertical pipe to enter the mixing chamber tangentially in opposite directions.

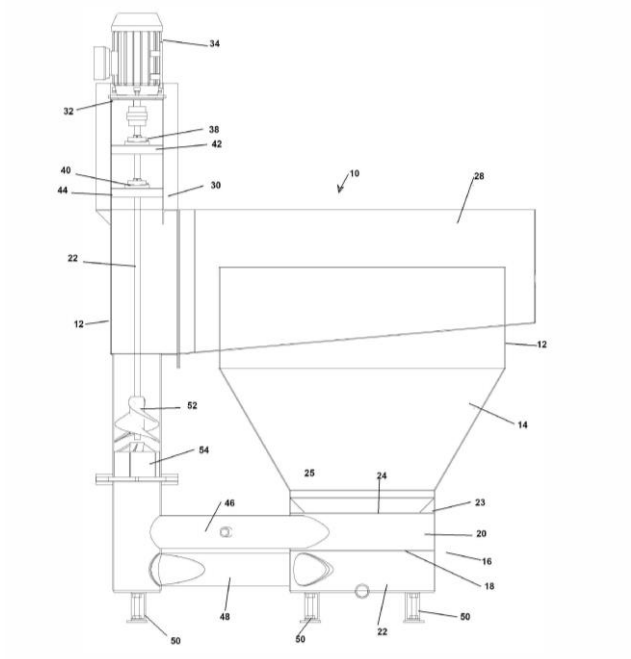

21: 2022/10931. 22: 2022/10/05. 43: 2023/04/20
51: C22B
71: Barend Jacobus BEYLEFELD
72: Barend Jacobus BEYLEFELD
54: NOBLE AND BASE METAL RECOVERY PROCESS WHERE CYANIDE IS USED
00: -
A noble and base metal recovery process from a comminuted ore which is added to a cyanide leach circuit. The solution from the leach circuit is treated with activated carbon that becomes loaded with the metal and is delivered to an elution plant where the metal is recovered from the carbon. Copper is added to the slurry or solution in an up flow mixing vessel to enable the copper to react with the cyanide and to adsorb on to activated carbon.

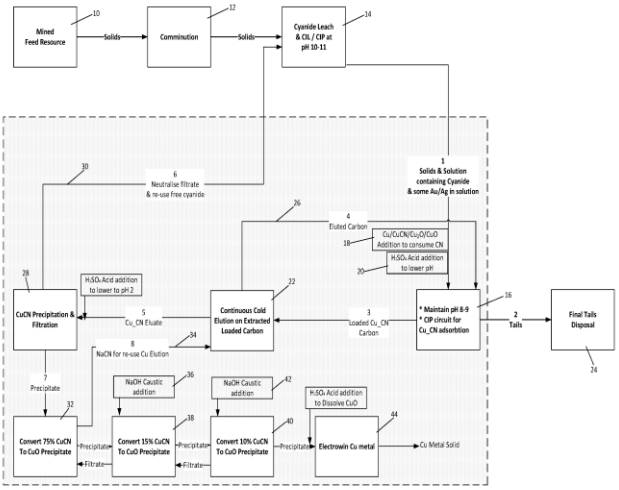

21: 2022/10940. 22: 2022/10/05. 43: 2023/04/24
51: E21B
71: ODFJELL TECHNOLOGY INVEST LTD
72: SOLEM, Jonas
54: HYDRAULICALLY LOCKED TOOL
00: -
Disclosed is a downhole tool and method of use. The tool has a sleeve assembly slideable within the tool body under the action of a hydraulic pressure differential. The sleeve assembly has a control collar portion and a first hydraulic reservoir is defined between a first end of the control collar portion and the body, and a second hydraulic reservoir is defined between a second end of the control collar portion and the body. A bleed conduit extending 10 between the first and second hydraulic reservoirs and an electromechanical control valve across the bleed conduit is used to regulate fluid flow along the bleed conduit. The electromechanical control valve may communicate with sensors, by which control systems are transmitted to the control valve.

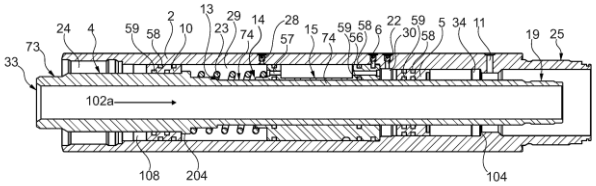

21: 2022/10950. 22: 2022/10/05. 43: 2023/04/19
51: H01R
71: JILIN ZHONG YING HIGH TECHNOLOGY CO., LTD.
72: WANG, Chao, XUE, Xiaolin

33: CN 31: 202020456090.6 32: 2020-04-01
54: ELECTRIC ENERGY TRANSMISSION ALUMINUM PART, ALUMINUM CONNECTOR AND COPPER-ALUMINUM JOINT
00: -
An electric energy transmission aluminum part, an aluminum connector and a copper-aluminum joint. The electric energy transmission aluminum part includes an aluminum body (1) internally provided with a conical insertion hole (11) which penetrates through front and rear ends thereof. The conical insertion hole is provided with a maximum diameter end and a minimum diameter end. Both the aluminum connector and the copper-aluminum joint include the electric energy transmission aluminum part. The electric energy transmission aluminum part, the aluminum connector and the copper-aluminum joint not only avoid an insulation layer (3) from being crimped into a lead portion and increasing a resistance of the lead portion, but also prevent an indentation from being formed on the surface of the insulation layer (3) and causing breakdown, and further reduce an interference with a mating end environment, thus achieving a wide application range. In addition, the copper-aluminum joint can also save the processing working hours and resources.

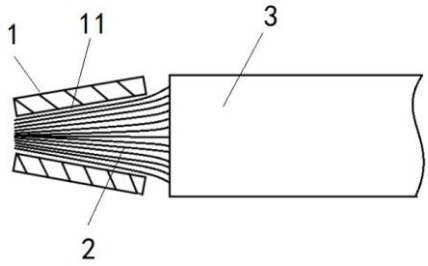

21: 2022/10951. 22: 2022/10/05. 43: 2023/04/19
51: H01R
71: JILIN ZHONG YING HIGH TECHNOLOGY CO., LTD.
72: WANG, Chao
33: CN 31: 202020456558.1 32: 2020-04-01
54: SPECIAL-SHAPED JOINT
00: -
A special-shaped joint includes at least one connection terminal (1) for connecting an electrical device, and at least one wire (4). The connection terminal is connected to a core (2) of the wire. The special-shaped joint has a simple structure and is easy to assemble. An included angle between the connection terminal and the core is greater than 0 degree and smaller than 180 degrees, so that the special-shaped joint can be applied to an electrical device with a specific connection requirement for the included angle between the connection terminal and the wire, thus having a wide application range.

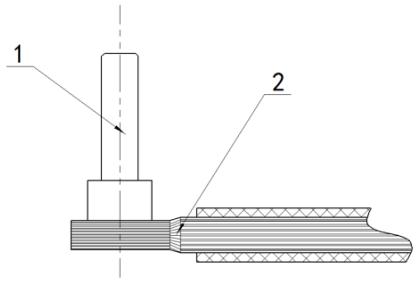

21: 2022/10952. 22: 2022/10/05. 43: 2023/04/19
51: H01R
71: JILIN ZHONG YING HIGH TECHNOLOGY CO., LTD.
72: WANG, Chao
33: CN 31: 202010249743.8 32: 2020-04-01
54: ELECTRIC ENERGY TRANSMISSION JOINT AND PREPARATION METHOD THEREFOR
00: -
An electric energy transmission joint and a preparation method therefor. The electric energy transmission joint includes an electric energy transmission copper part, an electric energy transmission aluminum part (9), and an aluminum wire (3). The electric energy transmission copper part includes a fixer (1) for connection with an electric consumption device, and a connector (2) for connection with the electric energy transmission aluminum part (9). A first through hole is provided inside the electric energy transmission aluminum part (9), and a second through hole is provided inside the connector (2). An aluminum conductive core (4) exposed by stripping an insulation layer (5) from a front end of the aluminum wire (3) is inserted into a cavity formed by the connection of the first through hole and the second through hole. The electric energy transmission aluminum part (9) is connected to the aluminum wire (3) by crimping. The electric energy transmission copper part has the advantages of light weight, fast production, and reduced production cost.

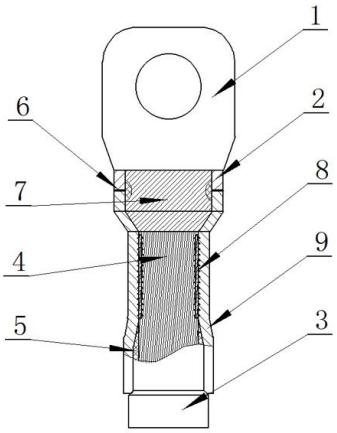

21: 2022/10989. 22: 2022/10/06. 43: 2023/04/19
51: B01D; F28D
71: WGA WATER GLOBAL ACCESS S.L., NOMEN CALVET, Juan Eusebio, HANGANU, Dan Alexandru
72: NOMEN CALVET, Juan Eusebio, HANGANU, Dan Alexandru
33: ES 31: U202030617 32: 2020-04-08
54: DEVICE FOR DESALINATION BY LIQUID WATER JET COMPRESSION
00: -
The invention relates to a system and device for desalination by liquid water jet compression, which is a phase-change desalination with a high-efficiency latent heat exchanger in which the pressure of the primary saturated vapor is increased until obtaining the secondary saturated vapor by injecting translational and rotational kinetic energy via pressurized water jets, so as to leave an unobstructed path through which the vapor flows at high speed in order to achieve a high flow rate and high efficiency.

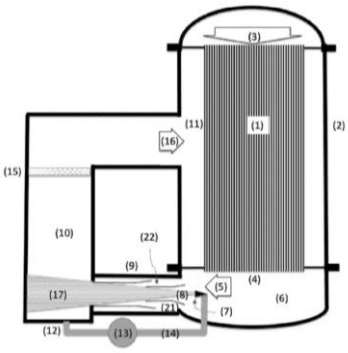

21: 2022/11002. 22: 2022/10/07. 43: 2023/04/25
51: H04L
71: APPVIEWX INC.
72: PURUSOTHAMAN, Anand, POOZHIKUNNATH RAMAKRISHNAN, Sunil Kumar, KUNNATHUVAYALIL VELAYUDHAN, Rajesh Kumar, RAMACHANDRAN, Aishwarya
33: US 31: 63/253,460 32: 2021-10-07
54: A CLOUD CONNECTOR SYSTEM FOR ESTABLISHING A SECURE CONNECTION BETWEEN CLOUD SERVER AND A TENANT
00: -
A computer-implemented method for enabling a cloud connector system (100) to establish a secure connection between on-premise devices and a cloud server (108) hosting a cloud Certificate Lifecycle Management as a Service (CLMaaS) for validating and upgrading a certificate on the on-premise devices is provided. The method includes implementing a plurality of cloud connectors (102A-N) in a tenant premise comprising a plurality of on-premise devices (104A-N) to establish a full-duplex connection between the plurality of on-premise devices and the CLMaaS, performing a runtime analysis of the connection between the cloud server and the plurality of cloud connectors, routing the requests from the cloud CLMaaS to the plurality of on-premise devices through the plurality of cloud connectors based on the run time analysis of the connection, and enabling the cloud connector system to execute the certificate validation and upgradation in the on-premise devices based on the request from the cloud CLMaaS.

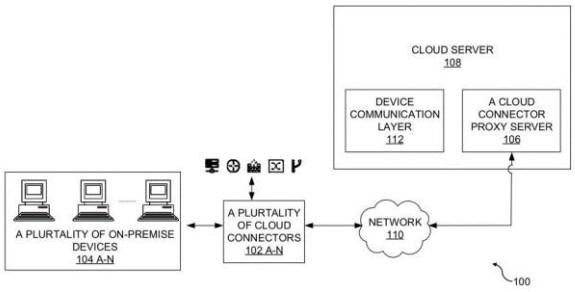

21: 2022/11068. 22: 2022/10/10. 43: 2023/04/24
51: B02C
71: LOESCHE GMBH
72: Jörg BETTENWORTH, Michael KEYSSNER
54: KEY GRINDING PAN SEGMENT, GRINDING PAN SEGMENT SYSTEM, AND METHOD FOR SAME
00: -

The invention relates to a replaceable key milling plate segment for a milling path of a milling plate of a rolling mill, having a ring-like shape with an outer circumference and an inner circumference about a center. The length of the key milling plate segment inner edge lying closer to the center is greater than the length of the outer edge lying remotely from the center. The invention additionally relates to a milling plate segment, a rolling mill, and a method for replacing milling plate segments.

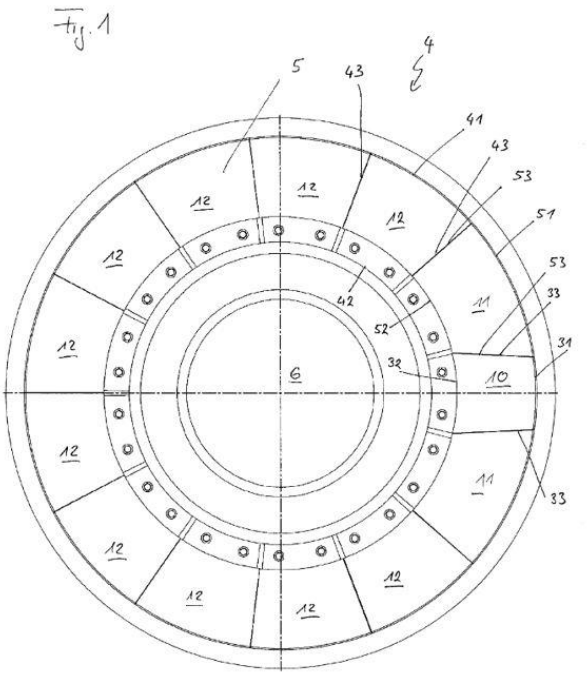

21: 2022/11077. 22: 2022/10/10. 43: 2023/04/24
51: C10G
71: HINDUSTAN PETROLEUM CORPORATION LIMITED
72: GNANASEKARAN, Valavarasu, DHAR, Pradyut Kumar, KRISHNA, Kanala Raghava, KANDANELLI, Ramesh, BALASUBRAMANIAM, Ravi, RAMACHANDRA RAO, Bojja
33: IN 31: 20204104109 32: 2020-03-30
54: SIMULTANEOUS PRODUCTION OF HIGH VALUE DE-AROMATIZED KEROSENE AND BTX FROM REFINERY HYDROCARBONS
00: -
The present disclosure discloses a process for obtaining an aromatic lean stream and an aromatic rich stream from a hydrocarbon feed, the process comprising: (a) obtaining a hydrocarbon feed; and (b) contacting the hydrocarbon feed with a solvent selected from a group consisting of alkyl aromatic hydrophilic polyethylene oxide, polyethylene glycols, and combinations thereof to obtain an aromatic lean stream and an aromatic rich stream. It further discloses a simultaneous process to obtain an aromatic lean stream and an aromatic rich stream. The present disclosure also discloses a process for obtaining de-aromatized kerosene from a hydrocarbon feed. Additionally, the present disclosure discloses a process for obtaining BTX from a hydrocarbon feed.

21: 2022/11112. 22: 2022/10/11. 43: 2023/04/26
51: H01R
71: JILIN ZHONG YING HIGH TECHNOLOGY CO., LTD.
72: WANG, Chao
33: CN 31: 202010250067.6 32: 2020-04-01
54: COPPER-ALUMINUM COMPOSITE ELECTRIC ENERGY TRANSMISSION SYSTEM AND PROCESSING METHOD THEREFOR
00: -
A copper-aluminum composite electric energy transmission system and a processing method therefor. The copper-aluminum composite electric energy transmission system comprises a copper terminal (1) and an aluminum cable (6), wherein the aluminum cable (6) comprises an aluminum conductor (2) and an insulating layer (3) arranged at the periphery of the aluminum conductor (2). The system further comprises an electric energy transmission aluminum piece (4), and a section of the aluminum conductor (2) whose insulating layer (3) is stripped is pressed in the electric energy transmission aluminum piece (4) to form a connecting piece; the electric energy transmission aluminum piece (4) and a front end of the aluminum conductor (2) form a fusion layer (5), a welding platform (11) is arranged at the end of the copper terminal (1) used for being welded to the electric energy transmission aluminum piece (4), and the fusion layer (5) wraps the welding platform (11) to form a transition layer (12) having metal atoms penetrating through each other or metal atoms combined with each other. By reducing an internal stress between copper and aluminum, the mechanical property of a copper-aluminum welded joint is improved; copper-aluminum compounds in the transition layer (12) are reduced, and the electrical property of the copper-aluminum welded

joint is improved; moreover, a path of the transition layer (12) against erosion by the external environment is increased, thereby solving the metal corrosion problem of the copper-aluminum welded joint, and prolonging the service life.

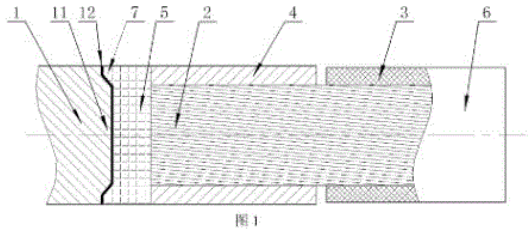

21: 2022/11140. 22: 2022/10/11. 43: 2023/03/24
51: B01D; F23J
71: KARBON CCS LTD
72: BØRSETH, Knut Erik, FLEISCHER, Henrik
33: NO 31: 20200450 32: 2020-04-14
54: A CARBON DIOXIDE CAPTURE SYSTEM COMPRISING A COMPRESSOR AND AN EXPANDER AND A METHOD OF USING SUCH A SYSTEM
00: -
The invention is a C02 capture system comprising the following features: - an intake (6) for C02-rich exhaust gas (6g) from an external first source (6s) to a compressor (2) and one or more outlets (5) for compressed, first C02-rich gas (6r) under high pressure (P) to a manifold (8) to a shell (10) enclosing at least parts of a combustion chamber (11) with a wall (11w), - wherein the combustion chamber (11) is comprising burners (13) arranged to burn fuel (14f) and compressed air (15c) supplied under the high pressure (P) from a fuel line (14) and an air supply pipe (15) respectively, to form a second, C02 rich gas (15r), - wherein slits (12) are provided in the wall (11w) in the combustion chamber (11) to let in the compressed C02-rich gas (6r) to mix with and cool the other C02-rich gas (15r) formed in the combustion chamber (11) of a third C02-rich exhaust gas (60r); - a heat exchanger (16) arranged to operate under the high pressure (P) and heat exchange the third, hot C02-rich exhaust gas (60r) from the combustion chamber (11) with returning C02-poor exhaust gas (60L) from a C02 extraction plant (100) under mainly the high pressure (P), - wherein the returned, now heated C02-poor exhaust gas (60L) is led via a manifold (9) back to an expander (3) which drives the compressor (2) and the C02 extraction plant (100), and out via an outlet (7).

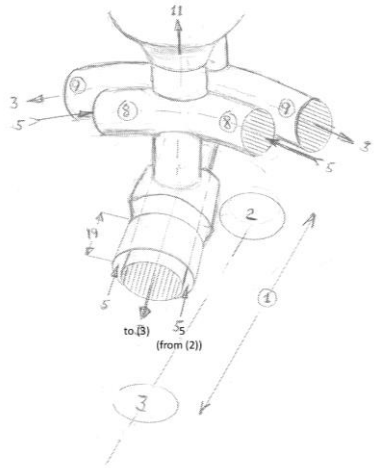

21: 2022/11159. 22: 2022/10/12. 43: 2023/04/24
51: A23N
71: CRESCENZO, Biagio
72: CRESCENZO, Biagio
33: IT 31: 10202000000666 7 32: 2020-03-30
54: PEAR PROCESSING METHOD AND MULTILANE APPARATUS
00: -
A method for processing pears advancing on housing and centering cups (9) of a multilane belt (7) with its calycine end facing upwards, in order to be cored, pitted and halved the method provides, in a first step, locking each pear against rotation inside its housing and centering cup (9), to measure the distance of the calycine end, and to communicate said distance to a control unit (14) that determines the height position of the endocarp of that pear, and, in a second step, to lower simultaneously, by the control unit (14), a coring rod (24) and a pitting knife (26) from a rest position to the height of the endocarp of the underlying pear, as determined by the control unit (14). A multilane apparatus for processing pears is also disclosed.

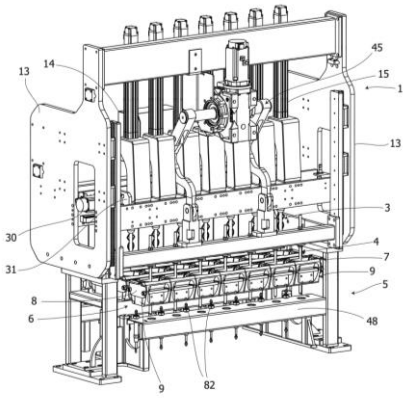

21: 2022/11164. 22: 2022/10/12. 43: 2023/03/17
51: H01Q
71: MARITIME IOT SOLUTIONS BV
72: MARTÍN BARTRINA, Álvaro, VÁZQUEZ ROY, José, Luis, DE INCLÁN SÁNCHEZ, Luis, Fernando, RAJO IGLESIAS, Eva
33: EP 31: 20382203.6 32: 2020-03-19
54: ANTENNA ARRAY MODULE
00: -
The present invention relates to an antenna array module for a communication system on a cargo ship, comprising at least a first (11), a second (12) and a third (16) antenna element, each mounted on a ground plane and containing an antenna feed. The first (11) antenna element is tilted with respect to the second (12) antenna element. The first and the second antenna element are arranged to radiate mainly towards a first path along the cargo ship and the third (16) antenna element is arranged to radiate mainly towards a second path opposite to the first path.

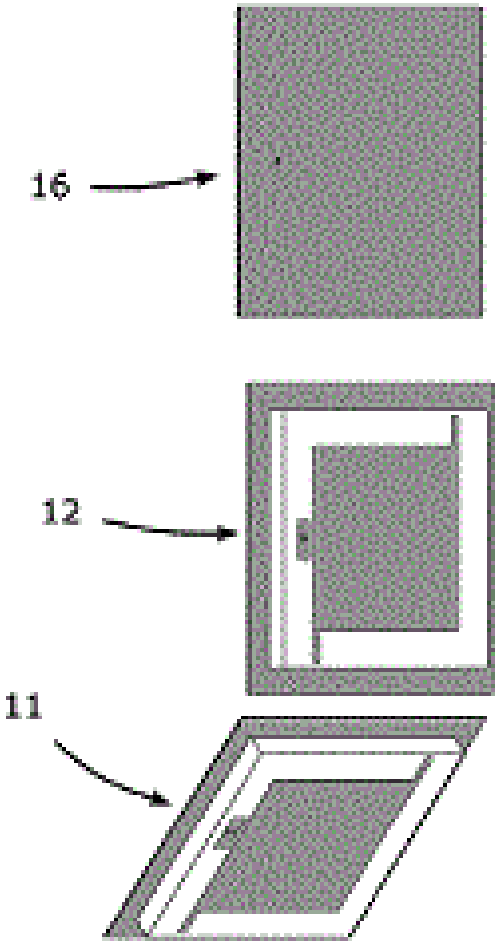

21: 2022/11200. 22: 2022/10/13. 43: 2023/04/24
51: A01K; G01S; G06F
71: Rouxcel Technology (Pty) Ltd
72: LE ROUX, Solomon Petrus
54: TRACKING METHOD AND DEVICE
00: -
Movement of an animal is tracked by attaching a device (10) to the animal; monitoring movement of the animal with sensors (30); analysing movement data from the sensors (30) in the tracking device (10) to detect abnormal behaviour, by using artificial intelligence to identify when there is an anomaly between the movement data and expected animal behaviour; and transmitting an alert signal from the tracking device (10) when the anomaly is identified.

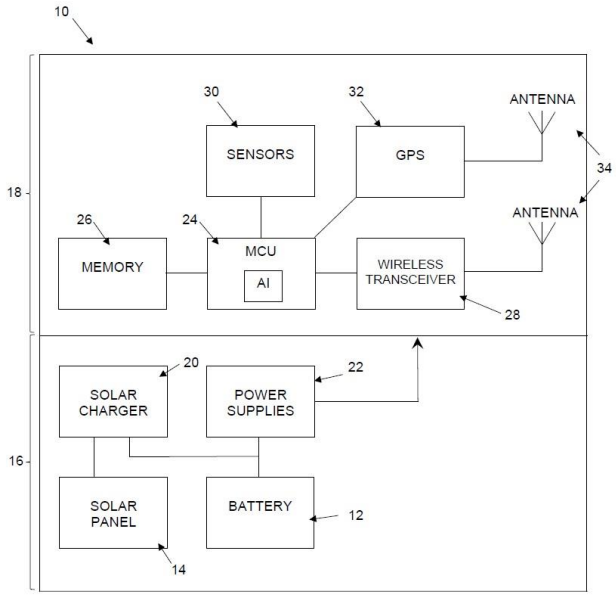

21: 2022/11240. 22: 2022/10/13. 43: 2023/05/08
51: C07C
71: CHINA PETROLEUM & CHEMICAL CORPORATION, SHANGHAI RESEARCH INSTITUTE OF PETROCHEMICAL TECHNOLOGY, SINOPEC
72: QI, Guozhen, CAO, Jing, LI, Xiaohong, WANG, Hongtao, WANG, Li, WANG, Yanxue
33: CN 31: 202010173916.2 32: 2020-03-13
54: METHOD FOR CONVERTING METHANOL IN FLUIDIZED BED REACTOR
00: -
The present invention relates to a method for converting methanol in a fluidized bed reactor. The method comprises feeding a raw material containing methanol into a fluidized bed reactor, contacting with a catalyst, and generating products comprising ethylene and propylene under effective conditions. The fluidized bed reactor comprises a dilute phase zone and a dense phase zone. A dilute phase temperature difference between any zones in the dilute phase zone in the fluidized bed reactor having a methanol concentration greater than 0.1 weight % (preferably greater than 0.01 weight %) is controlled to be less than 20°C. A dense phase temperature difference between any zones in the dense phase zone in the fluidized bed reactor having a methanol concentration greater than 0.1 weight % (preferably greater than 0.01 weight %) is controlled to be less than 10°C.

21: 2022/11266. 22: 2022/10/13. 43: 2023/03/16
51: A61P; C07K; C12N
71: Memorial Sloan-Kettering Cancer Center
72: STUDER, Lorenz, KIM, Tae-Wan, KOO, So-Yeon
33: US 31: 63/004,138 32: 2020-04-02
54: METHODS OF GENERATING MIDBRAIN DOPAMINE NEURONS, MIDBRAIN NEURONS AND USES THEREOF
00: -
The present disclosure provides methods for generating midbrain dopamine neurons and precursors thereof, midbrain dopamine neurons and precursors thereof generated by such methods and compositions comprising such cells, and uses thereof for preventing, modeling, and/or treating a neurological disorder.

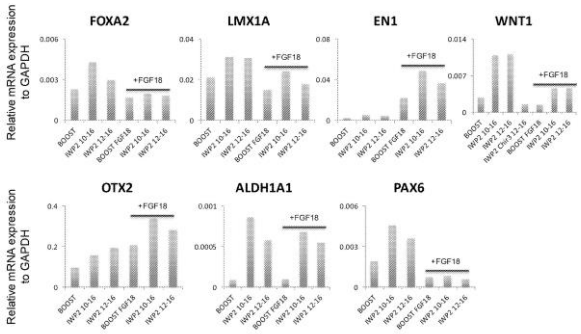

21: 2022/11288. 22: 2022/10/14. 43: 2023/04/24
51: A61K
71: Institute of Feed Research, Chinese Academy of Agricultural Sciences
72: Xiubo, LI, Fei, XU, Jing, LIU, Jingju, ZHANG, Yiming, LIU, Xiaojie, CHEN
54: CHLORINE DIOXIDE TEAT DIPSOLUTION USED FOR DAIRY COWS BEFORE AND AFTER MILKING, AND PREPARATION METHOD THEREOF
00: -
Disclosed is a chlorine dioxide solution for dairy cow teat dip, a preparation method thereof, and use thereof. The chlorine dioxide disinfectant is a film-forming dairy cow teat disinfectant, which can provide long-term protection for dairy cows while sterilizing and disinfecting the dairy cows. The disinfectant can be retained on cows for a long time, and films formed therefrom are soft and easy to remove.

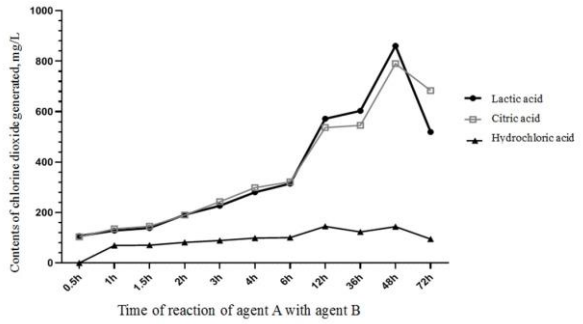

21: 2022/11322. 22: 2022/10/14. 43: 2023/04/24
51: A61B; G01J; G01N
71: EZERX HEALTH TECH PRIVATE LIMITED
72: MAHAPATRA, Partha Pratim Das, SHARMA, Sandeep
33: IN 31: 202021015008 32: 2020-04-04
54: AN APPARATUS AND A METHOD FOR DETERMINING CHARACTERISTICS OF A FLUID
00: -
The present disclosure discloses an apparatus for determining characteristics of a fluid. The apparatus includes a visible light producing LED array, an optical system, and a microcontroller. In the apparatus, the visible light producing LED array emits light and produces a light beam for irradiating an object. Further, in the apparatus, the optimal system includes a grating to receive irradiated light from the object through a collimator and disperse the light into wavelengths, a focusing lens and a linear image sensor arranged at a focal plane of the focusing lens to convert the light by the grating and focused by the focusing lens, into electrical signals. Lastly, in the apparatus, the microcontroller is connected to the sensor and processes the electrical signals and communicates for processing.

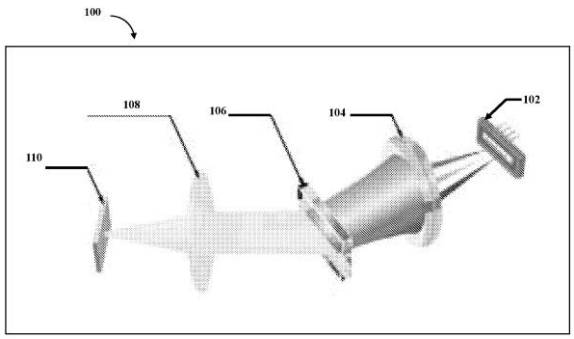

21: 2022/11323. 22: 2022/10/14. 43: 2023/04/24
51: B63B; F03B; F03D
71: OFFSHORE POWER PLANT
72: LOTHE, Atle
33: NO 31: 20200454 32: 2020-04-15
54: FLOATING VESSEL FOR ENERGY HARVESTING
00: -
The invention relates to a floating vessel (1) for energy harvesting, comprising:a hull (2), and a wave power plant (10). The wave power plant comprises:an inlet (11) arranged to receive waves of water, said inlet (11) leading to a transport channel (12) arranged with an angle to convey and lift water entering the inlet (11),said transport channel (12) leading to an elevated basin (13) arranged to receive water, and said basin (13) having an outlet to a turbine (14T) below said basin (13), said turbine (14T) running an electrical generator (14G) for converting the potential energy of the water to electrical energy.

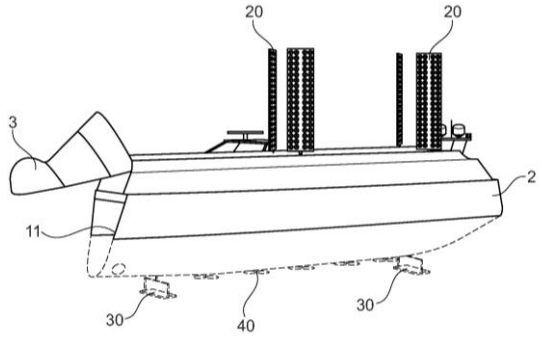

21: 2022/11365. 22: 2022/10/17. 43: 2023/04/24
51: C09K
71: Shunde Hospital, Southern Medical University (The First People's Hospital of Shunde Foshan), Union Hospital, Tongji Medical College, Huazhong University of Science and Technology
72: Tongtong Huo, Kaixian Deng, Lixin Li, Zhewei Ye, Wei Wu, Ziyi Wang
33: CN 31: 202210026421.6 32: 2022-01-11
54: A METHOD FOR ACQUIRING OBJECT IMAGE OF UTERINE FIBROID BASED ON RESIDUAL NETWORK STRUCTURE
00: -
The invention is applicable to the field of medical image processing technology, in particular to a method for acquiring object image of uterine fibroid based on residual network structure, including two stages, namely model training and model application. The model training includes: S1. on the

original sample ultrasound image, annotate the region with uterine fibroid image as the lesion object image region with rectangular box; S2. detect the said standard annotated image with improved YOLOv3 object detection model; S3. the results are unified to obtain the trained improved YOLOv3 object detection model. For application, the ultrasound image to be detected is inputted into the trained improved YOLOv3 object detection model for detection, so as to obtain the result of the uterine fibroid object image region. The invention can improve the accuracy of acquiring uterine fibroid image region, and the detection speed is fast, with strong adaptability to small-object task and multi-object task.

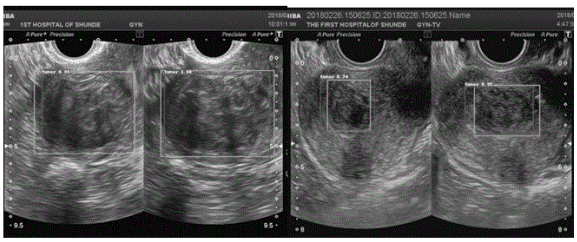

21: 2022/11372. 22: 2022/10/18. 43: 2023/04/24
51: G06F; H03M; H04L; H04M
71: Sylvester Richards
72: Sylvester Richards
33: ZA 31: 2022/04387 32: 2022-04-22
54: CONVERSION SYSTEM
00: -
A system for converting a given value of data on a cellular contract of the type set forth to a predetermined talk value, so that the user may benefit from using talk time and not be restricted to data.

21: 2022/11381. 22: 2022/10/18. 43: 2023/04/24
51: F03B
71: HINKS, Raymond William
72: HINKS, Raymond William
54: A CARTRIDGE FOR PRODUCING ENERGY
00: -
A cartridge unit for producing kinetic energy from a water current, including a body which is mounted for rotation about a first axis and which includes a first support and a second support which is spaced from the first support, a plurality of blades which extend at least partially between the supports, each blade being mounted to the first support and the second support about a respective pivot axis, and a plurality of stopper members, each stopper member being positioned to allow a respective blade to pivot between an active condition at which the blade engages the stopper member whereby water current which flows in a first direction and which acts on the blade causes rotation of the body in a first angular direction about the first axis and an inactive condition in which the blade is disengaged from the stopper member.

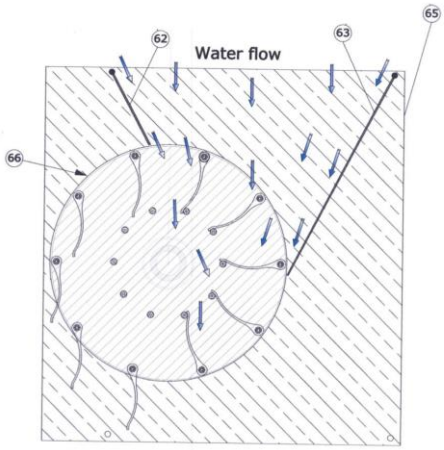

21: 2022/11389. 22: 2022/10/18. 43: 2023/04/24
51: A61K; A61P; A01P
71: SMILEBIOTEK ZHUHAI LIMITED
72: ZHANG, Yan
33: CN 31: 202010334025.0 32: 2020-04-24
54: APPLICATION OF COMPOUNDS IN CONTROLLING OR KILLING MITES
00: -
An application of a series of compounds in controlling or killing mites. It has been found by comparison that the compounds, when compared with a control group, can reduce the survival time of mites; in particular, taraxerol, diosmetin, and taraxasteryl acetate can significantly shorten the survival time of mites, and can be used for miticide and mite control products (such as drugs, cosmetic products, daily products and so on).

21: 2022/11413. 22: 2022/10/18. 43: 2023/05/08
51: C07C
71: CHINA PETROLEUM & CHEMICAL CORPORATION, SHANGHAI RESEARCH INSTITUTE OF PETROCHEMICAL TECHNOLOGY, SINOPEC

72: ZONG, Hongyuan, QI, Guozhen, CAO, Jing, LI, Xiaohong, YU, Zhinan, WANG, Li
33: CN 31: 202010193664.X 32: 2020-03-19
54: METHOD FOR ADJUSTING EMPTY BED AIR VELOCITY IN FLUIDIZED BED
00: -
A method for adjusting empty bed air velocity in a fluidized bed, using a solid catalyst to serve as a fluidized particle or a part of a fluidized particle. The method is characterized in that: the empty bed air velocity μ of a reaction area of the fluidized bed is measured, the velocity is compared with the bed layer average catalyst density ρ of the solid catalyst in the reaction area of the fluidized bed, and the empty bed air velocity μ is adjusted as required so that the empty bed air velocity μ and the bed layer average catalyst density ρ satisfy formula (1) as follows: ρ = 0.356μ3 − 4.319μ2 − 35.57μ + M, where M = 250-554, preferably 300-550 or 400-500, such as 487.9, wherein the unit of μ is meters/second, and the unit of ρ is kilograms/square meter. The method is applicable in the industrial production of light olefins.

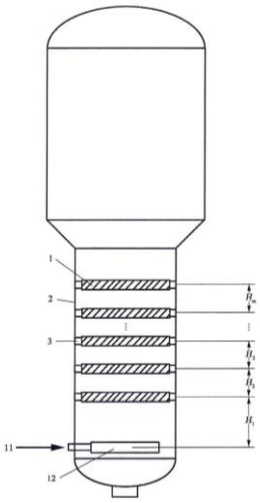

21: 2022/11474. 22: 2022/10/19. 43: 2023/04/25
51: F16L
71: TISS (PTY) LTD
72: HILL, Keith
54: A DEVICE FOR USE IN INSULATING A PIPE
00: -
The invention provides a device for use in insulating a pipe, the device including a first trough-shaped member with a first inner concave surface, a second trough-shaped member with a second inner concave surface which is movable relative to the first trough-shaped member, and at least one fastener which is operable by a user to releasably secure the first trough-shaped member to the second trough-shaped-member such that the first inner concave surface and the second inner concave surface enclose a cylindrical volume.

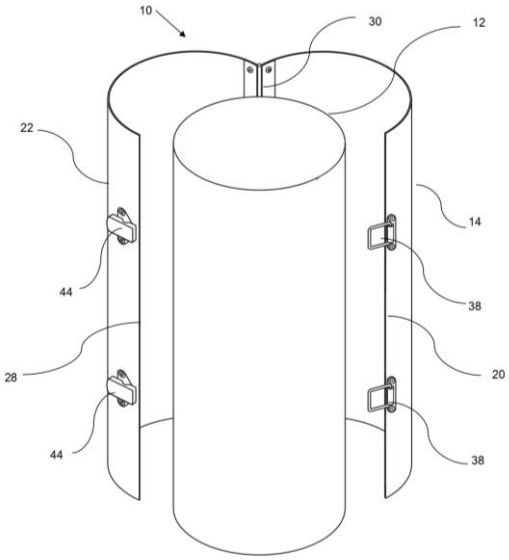

21: 2022/11495. 22: 2022/10/20. 43: 2023/04/25
51: A61K
71: KALOCYTE, INC.
72: PAN, Dipanjan, DOCTOR, Allan, SPINELLA, Phil
33: US 31: 63/014,665 32: 2020-04-23
33: US 31: 17/238,809 32: 2021-04-23
54: SELF-ASSEMBLING OXYGEN CARRIER COMPOSITIONS
00: -
Synthetic blood substitutes and methods for making them. A lipid-amphiphile blood-substitute precursor compound having a hydrophobic fatty acid/acyl moiety, a hydrophilic head moiety including a phosphate group, and a pH responsive moiety. The lipid-amphiphile precursor is configured to self-assemble from a solution mixture of phospholipid and cholesterol in the presence of hemoglobin and an allosteric effector into a hybrid-vesicle resulting from the combined self-assembly of both the amphiphilic lipid-oligomer and the lipids into an advanced vesicular structure containing a hemoglobin/allosteric effector payload.

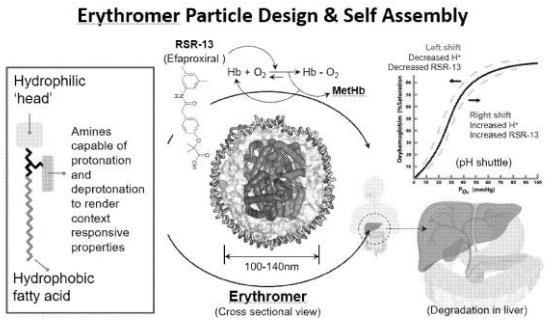

21: 2022/11509. 22: 2022/10/20. 43: 2023/05/02
51: C22B; F23D
71: SMS GROUP GMBH
72: Andreas SCHÜRING, Nikolaus Peter Kurt BOROWSKI
33: DE 31: 10 2020 206 078.9 32: 2020-05-14
33: DE 31: 10 2020 215 085.0 32: 2020-12-01
54: GAS INJECTION DEVICE
00: -
The invention relates to a gas injection device (1) for introducing a process gas into a non-iron molten metal and/or slag, in particular molten copper and/or copper slag, comprising a hollow cylindrical lance (2) which is made of a refractory material and/or graphite, preferably a lance which consists of a refractory material and/or graphite, wherein the lance (2) has an inlet opening (5) for the process gas and a gas injection module (9, 23, 27) which is connected to the hollow cylindrical lance (2) and is made of a refractory material and/or graphite, preferably a gas injection module which consists of a refractory material and/or graphite, comprising at least one outlet opening (12) for the process gas, and the outlet opening (12) comprises at least one element (13) which is made of a ceramic material and through which a gas can flow and the process gas is introduced into the molten metal.

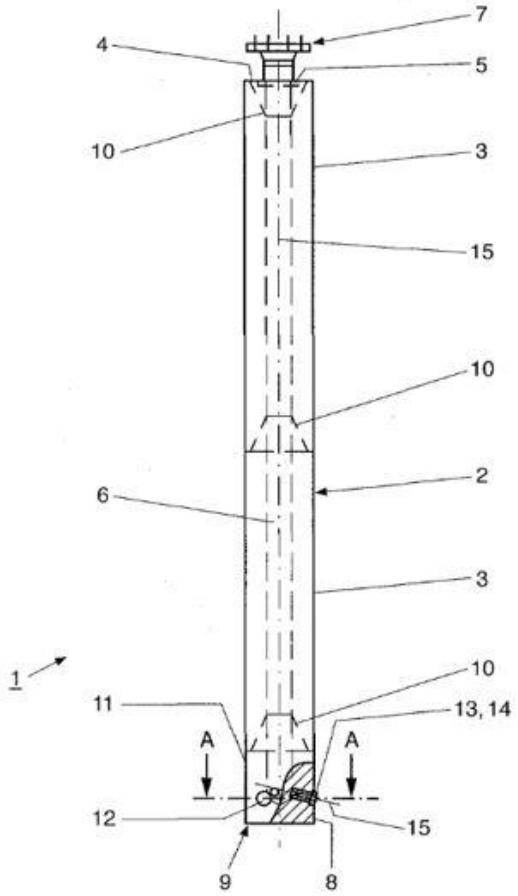

21: 2022/11510. 22: 2022/10/20. 43: 2023/05/02
51: B22D; C21C; C22C
71: ARCELORMITTAL
72: Frédéric BONNET, Valerie DAESCHLER, Thierry MASTRORILLO
33: IB 31: PCT/IB2020/056418 32: 2020-07-08
54: A METHOD OF CASTING A STEEL SEMI-PRODUCT WITH HIGH TITANIUM CONTENT
00: -
A method of casting a steel semi-product from a liquid steel, the steel semi-product having a targeted composition in titanium of at least 3,5% in weight.

21: 2022/11527. 22: 2022/10/21. 43: 2023/04/25
51: B02C
71: VECTIS PTY LTD AS TRUSTEE FOR JJB TRUST
72: BELKE, Jeffrey Victor
33: AU 31: 2020901365 32: 2020-04-30
54: A GRINDING MILL ROTOR
00: -
There is disclosed a grinding mill rotor for a grinding mill to stir a slurry of mineral ore particles, or other

particulate material, and a grinding medium within the grinding mill thereby to cause turbulence within the slurry to promote attrition of the particulate material through interaction with the grinding medium. The grinding mill rotor includes a planar body having an axis of rotation around which the body rotates during use. Several spaced apart paddles are provided on and extend transversely across the body. At least some of the paddles have a rotationally leading face that is angled relative to an orthogonal line extending orthogonally from the axis of rotation of the body, wherein an offset angle ß between the leading face and the orthogonal line is selected to be between 1° and 35° to control a rate at which the slurry slides across the planar body during use.

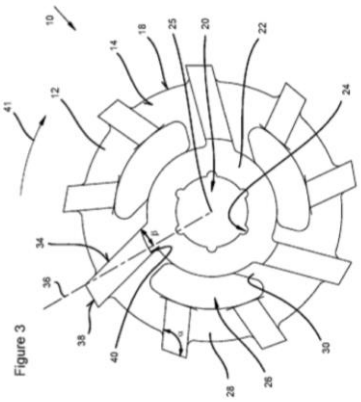

Figure 3

21: 2022/11529. 22: 2022/10/21. 43: 2023/05/02
51: C12Q
71: PATHOGENDX, INC.
72: KATCHMAN, Benjamin Alan, NEWLAND, Cory Scott, EGGERS, Frederick Henry, HOGAN, Michael Edward
33: US 31: 63/000,844 32: 2020-03-27
33: US 31: 63/078,783 32: 2020-09-15
33: US 31: 16/950,210 32: 2020-11-17

54: METHODS FOR DETECTING LOW LEVELS OF COVID-19 VIRUS

00: -

Provided herein is a method for detecting the presence of a COVID-19 virus in a human sample or an environmental sample having one or more viruses and bacterial pathogens. Samples are processed to obtain total nucleic acids. A combined reverse transcription and asymmetric PCR amplification reaction is performed to obtain fluorescent labeled COVID-19 virus specific amplicons. The amplicons are detected by microarray hybridization near the lowest limit of detection. Also provided is a method for detecting concurrently with COVID-19 virus, the presence of respiratory disease-causing pathogens including viruses, bacteria and fungus in a single assay using the above method

21: 2022/11582. 22: 2022/10/24. 43: 2023/04/25
51: G06F; G06K; G06N
71: OMNIPRESENT GLOBAL (PTY) LTD
72: ADAMS, Aphiwe
33: ZA 31: 2020/01852 32: 2020-03-24

54: REMOTE TOWER ASSET MONITORING SYSTEM (RTAMS)

00: -

The present invention relates to remote monitoring system for detecting changes to equipment installed in a structure and/or structure site and generating an alert message describing said changes. The system includes a sensing arrangement; an electronic database; a data transmission means; a method of identifying physical and visual changes to an object, wherein the method utilizes a first set of visual data of an object, followed by receiving a second set of visual data of the object, and comparing the first and second set of visual data to identify visual and physical changes to the object. This system therefore serves to identify changes to equipment that has been added, misaligned, moved or stolen, and then notifying a user of said changes by the transmission of an alert message.

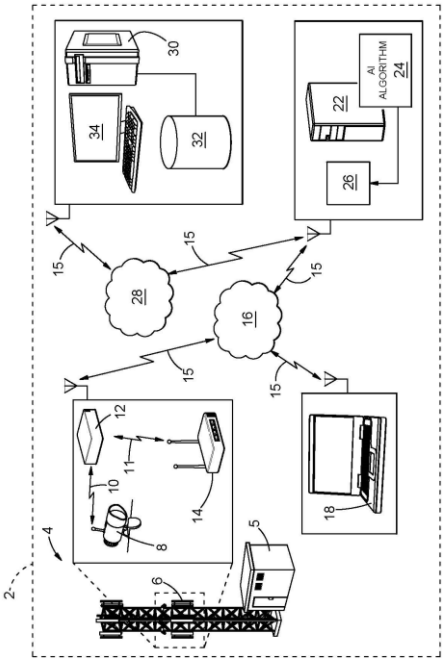

21: 2022/11588. 22: 2022/10/24. 43: 2023/04/25
51: E04H
71: KENNETH LEWIS HAWKSWORTH
72: KENNETH LEWIS HAWKSWORTH
33: ZA 31: 2020/04586 32: 2020-07-24
54: AUTOMATIC POOL CLEANER COVERAGE ENHANCING ACCESSORY
00: -
The invention relates to a pool cleaner accessory which is adapted for use in association with an automatic pool cleaner to enhance surface coverage of the pool cleaner. The pool cleaner accessory comprises a first tubular member and a second tubular member arranged coaxially and being rotatable relative to each other about a substantially common axis; and a clutch mechanism for controlling rotation of the tubular members relative to each other. The clutch mechanism is arranged coaxially with and intermediate the first and second tubular members and configured alternately to engage and disengage the tubular members with each other. Moreover, the clutch mechanism allows the tubular members to rotate freely, in both directions, relative to each other in an inoperative condition, but restricts relative rotation of the tubular members to a substantially uni-directional rotation in an operative condition under conditions of suction or water pressure being applied.

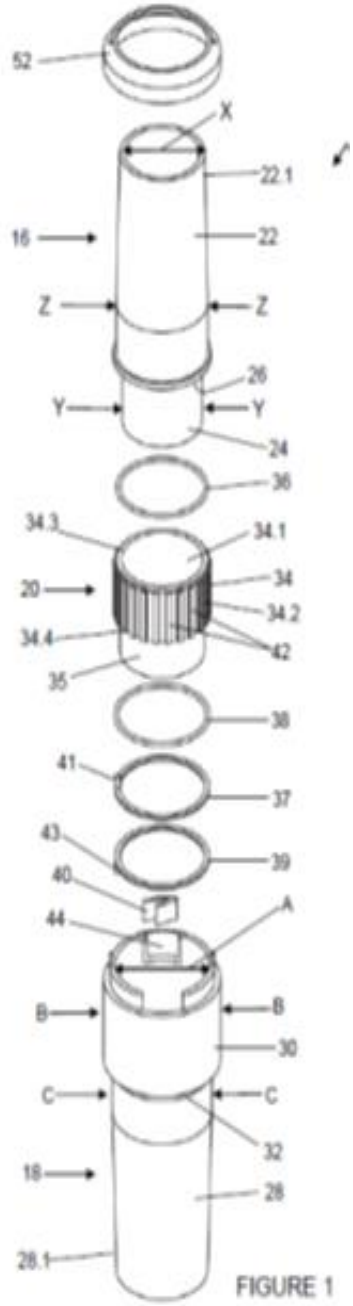

21: 2022/11590. 22: 2022/10/24. 43: 2023/04/24
51: B62D
71: ARCELORMITTAL
72: Yohan MERDJI, Dan HASENPOUTH, Joël WILSIUS
54: ROCKER REINFORCEMENT FOR AN ELECTRIC VEHICLE
00: -
Reinforced rocker assembly having a closed section reinforcement located in the hollow volume formed between the rocker components, wherein the

reinforcement is assembled to a rocker component in the transition zones between an upper horizontal wall and an upper flange of said rocker component and in the transition zones between a lower horizontal wall and a lower flange of said rocker component and wherein in said transition zones, the angles a and ß formed between the flange and the branch of the reinforcement extending outwards of the rocker component are comprised between 90° and 180°.

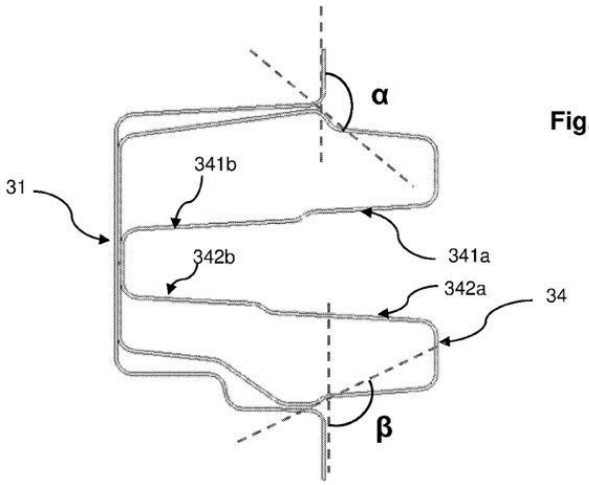

Fig. 5

21: 2022/11647. 22: 2022/10/25. 43: 2023/04/26
51: E02D; E02F
71: LIEBHERR-MINING EQUIPMENT COLMAR SAS
72: WEBER, Gérard, VICQ, Martial
33: DE 31: 10 2020 109 010.2 32: 2020-04-01
54: CHANGE SYSTEM FOR WEAR PARTS OF AN EXCAVATOR BUCKET OF AN EARTHMOVING MACHINE
00: -
The invention relates to a change system for wear parts of an excavator bucket of an earthmoving machine, comprising a carrier structure which can be fastened to or is formed on the excavator bucket and which has a projection and also an exchange part with a pocket-like cavity for releasably plugging the exchange part onto the projection of the carrier structure, wherein, to secure the exchange part on the carrier structure, there is provided at least one connection member which is connected to the carrier structure via a first connecting mechanism and to the exchange part via a second connecting mechanism physically separated from the first connecting mechanism, wherein at least one of the two connecting mechanisms is a releasable connection.

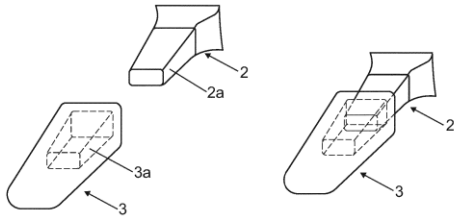

Fig. 2

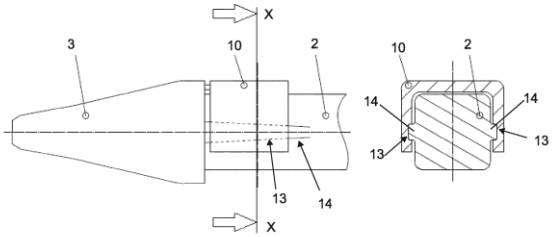

Fig. 4

21: 2022/11649. 22: 2022/10/25. 43: 2023/04/26
51: F42B
71: KANTUREK-LUCAS, David Christopher
72: KANTUREK-LUCAS, David Christopher
33: GB 31: 2006627.0 32: 2020-04-29
54: CARTRIDGE
00: -
This invention relates to a cartridge, and more particularly but not exclusively, to a transparent cartridge that allows a projectile contained therein to be visible through the cartridge. The cartridge has a casing with a projectile therein and a retainer at a right circular front end of the casing.

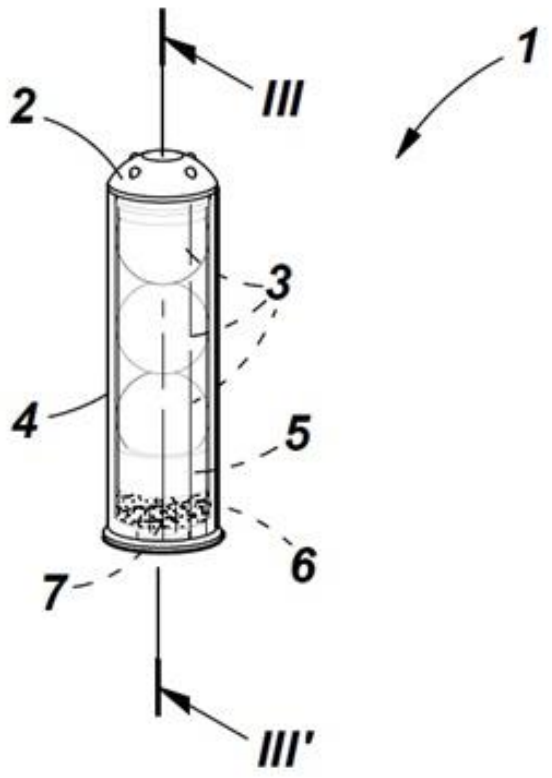

21: 2022/11650. 22: 2022/10/25. 43: 2023/04/26
51: B01J
71: PAULETTO, Gianluca
72: PAULETTO, Gianluca
33: EP 31: 20170265.1 32: 2020-04-18
54: A REACTOR WITH AN ELECTRICALLY HEATED STRUCTURED CERAMIC CATALYST
00: -
The invention relates to a reactor shell (10) for producing hydrogen and/or synthesis gas and/or carbon dioxide from a fed reactive mixture stream comprising: at least one reactive stream duct (20) formed within said reactor shell (10), at least one structured ceramic catalyst (30) having a plurality of juxtaposed hollow ceramic subunits (31), at least one electrical heating means (40) for heating said structured ceramic catalyst (30) up to a predetermined reaction temperature. The reactor shell (10) is characterized by an electrically heated structured ceramic catalyst (30) where said electrical heating means (40) is arranged inside at least some of said hollow ceramic subunits (31) in a manner that there still remains a flowing passage (313).

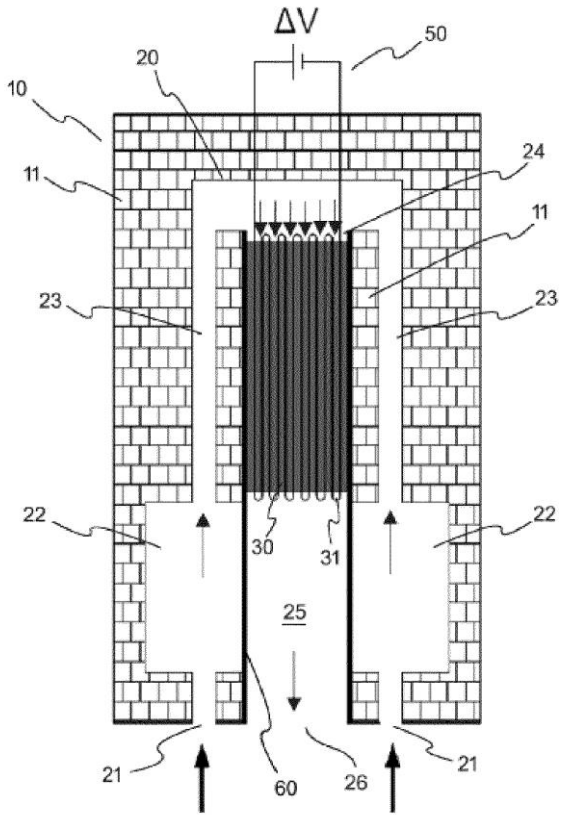

21: 2022/11870. 22: 2022/10/31. 43: 2023/03/17
51: A61K; C07D; A61P
71: CHENGDU BAIYU PHARMACEUTICAL CO., LTD.
72: WEI, Yonggang, XU, Xuezhen, CHU, Hongzhu, HE, Lvxue, LEI, Feiquan, YAN, Jie, HE, Yang, WANG, Meiwei, SU, Guizhuan, LIU, Bing, SUN, Yi
33: CN 31: 202010302603.2 32: 2020-04-17
33: CN 31: 202010679647.7 32: 2020-07-15
33: CN 31: 202110360821.6 32: 2021-04-02
54: IMIDAZOLIDINONE DERIVATIVES AND MEDICAL USE THEREOF
00: -
The present application relates to imidazolidinone derivatives and medical use thereof, and in particular relates to pyrimidine derivatives represented by general formula (I), or stereoisomers, solvates, metabolites, prodrugs, pharmaceutically acceptable salts or co-crystals thereof, a pharmaceutical composition comprising the same, and use of the compound or pharmaceutical composition according to the present application in the manufacture of a medicament for treatment of cancer.

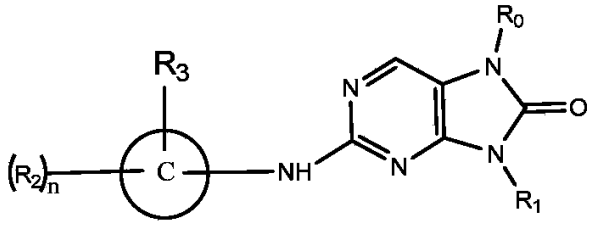

(I)

21: 2022/11871. 22: 2022/10/31. 43: 2023/04/26
51: A01G; G05B
71: VALMONT INDUSTRIES, INC.
72: ANDERSON, Ashley E., ANDERSON, Christopher M.
33: US 31: 63/021,175 32: 2020-05-07
54: SYSTEM, METHOD AND APPARATUS FOR IRRIGATION CONTROL AND DATA MANAGEMENT
00: -
The present invention provides a system, method and apparatus for irrigation control and data management. According to a preferred embodiment, an irrigation control system may include a data collection module which receives and stores system data generated by sensors and supporting systems including irrigation, drive, weather, sensor and electrical systems of a mechanized irrigation system. According to preferred embodiments, the system preferably also includes a system control module which transmits system control instructions to system components. Additionally, the present invention also includes a display module which provides a display of graphical user interfaces embedded with system data and selectable control instructions.

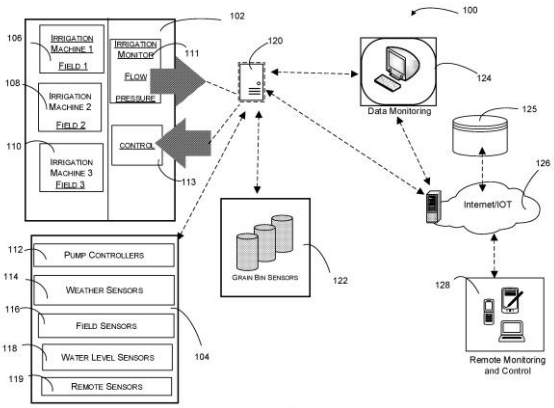

21: 2022/11872. 22: 2022/10/31. 43: 2023/04/26
51: F28D
71: Lumenion GmbH
72: Peter KORDT, Herbert PIEREDER
33: EP 31: 21153117.3 32: 2021-01-22
54: HEAT STORE WITH RAILS AS HEAT-STORAGE BODIES
00: -
A heat store comprises heat-storage bodies (10) for storing thermal energy, a housing (2), in which the heat-storage bodies (10) are accommodated; and at least one line (7) for a heat-transfer fluid (6), in order to feed thermal energy to the heat-storage bodies (10) and/or carry it away from the heat-storage bodies (10). Each of the heat-storage bodies (10) comprises a metal rail (11) of an elongated form, the cross-section of which has a web (12) between widened ends (13, 14).

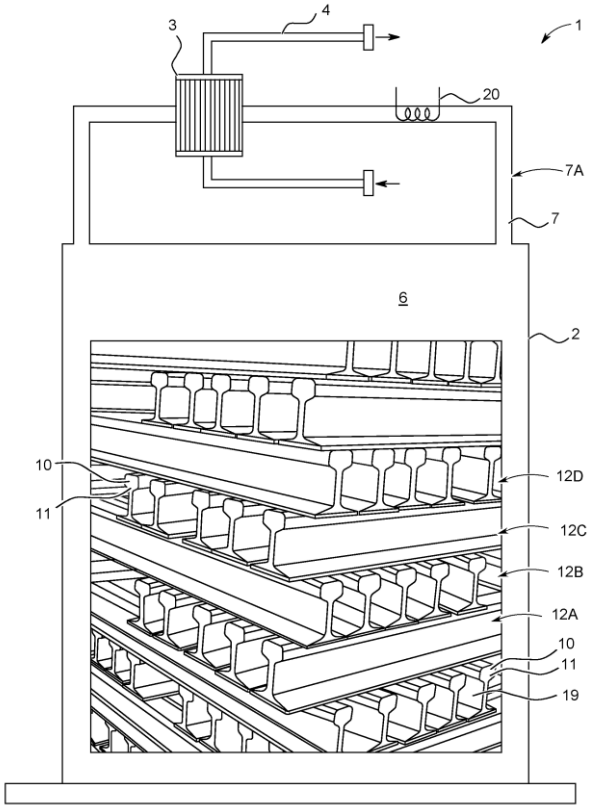

21: 2022/11895. 22: 2022/11/01. 43: 2023/05/05
51: A61J; B65D
71: ALPLA WERKE ALWIN LEHNER GMBH & CO. KG
72: Thomas BOHLE, Christian ZMÖLNIG, Daniel SCHNETZER
33: CH 31: 00598/20 32: 2020-05-18
54: PLASTIC CONTAINER
00: -

The invention relates to a plastic container (11) which is blown in a blow mold, having a body (13), on which an opening (15) is provided, and a disposable closure (17), which closes the opening (15) and is formed in the blow mold together with the body (13). A holding strip (19) with a first end and a second end (21, 23) is also formed in the blow mold together with the body (13) and the disposable closure (17). The first end (21) is permanently fixed to the body (13), and the second end (23) is permanently fixed to the closure (17). The body (13), the disposable closure (17), and the holding strip (19) are formed as a single piece.

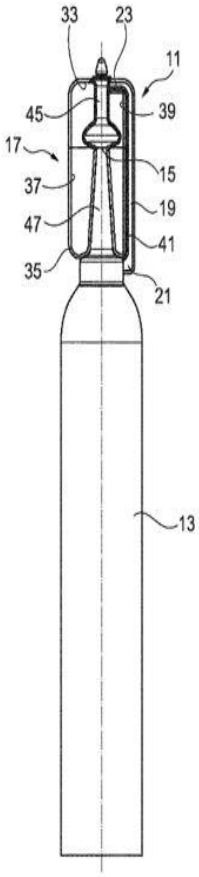

21: 2022/11921. 22: 2022/11/02. 43: 2023/05/03
51: G09F; H04M
71: Farrel Nussbaum, Alon Nussbaum
72: Farrel Nussbaum, Alon Nussbaum
54: A HEADREST ADVERTISING MEANS
00: -
A headrest advertising means comprising a sheet portion which is shaped and sized to fit about an upper section of a chair backrest, alternately a headrest, the sheet comprising at least one headrest securing means, a plurality of advertising panels of which at least one advertising panel is releasably securable to the sheet portion and a display window wherein at least one of an advertising panel and an electronic device is securable therein. The adver-tising means display surface is proximal to the rear section of the headrest. At least one ad-vertising panel is thereby viewable whilst the electronic device is secured within the display window. The sheet portion is securable over the headrest, alternately against the back of a headrest. One advertising panel is digital and displays digital advertising content. The digital advertising content displayed is adaptable and determined by relevance to the user.

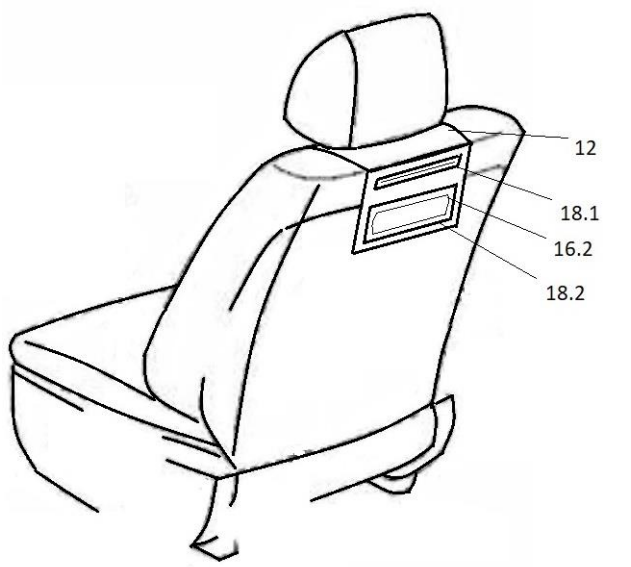

21: 2022/12031. 22: 2022/11/03. 43: 2023/05/05
51: A61K
71: Anhui Science And Technology University
72: ZHANG Xinyong, WANG Haibo, GUO Zhenchao, LU Jiawen, DOU Jinfeng, ZHOU Lili, FANG Yanxi
54: APPLICATION OF COMPOSITION OF BERGAPTEN AND QUERCETIN FLAVONE IN PREPARING MEDICINE FOR TREATING CANCER
00: -
The invention discloses an application of a composition of bergapten and quercetin flavone in preparing medicine for treating cancer, and belongs to the technical field of anticancer drug preparation. The bergapten and quercetin flavone composition of the invention has obvious pharmacological activities of resisting lung cancer, liver cancer, cervical cancer and the like, and the composition is expected to be

developed into a new tumor prevention and treatment drug, an anti-cancer reversal agent and an auxiliary tumor treatment drug with low toxicity, high efficiency and various pharmacological effects.

21: 2022/12070. 22: 2022/11/04. 43: 2023/05/12
51: H04L
71: Ms.Rashmi K.Dixit, Dr.K.Ravindranath, Mr.Srikanth Parikibandla, Dr.Sreenivas Alluri, Mr.Jaydip Kumar, Dr.Mridul Dharwal, Dr.Sushma Jaiswal, Mr.N.Raghava Rao, Mr.Yogendra Kumar, Mr.Tarun Jaiswal
72: Ms.Rashmi K.Dixit, Dr.K.Ravindranath, Mr.Srikanth Parikibandla, Dr.Sreenivas Alluri, Mr.Jaydip Kumar, Dr.Mridul Dharwal, Dr.Sushma Jaiswal, Mr.N.Raghava Rao, Mr.Yogendra Kumar, Mr.Tarun Jaiswal
54: A SYSTEM FOR DATA ENCRYPTION BASED ON CLOUD CRYPTOGRAPHY AND METHOD THEREOF
00: -
The cloud services platform offers the storage and processing of data. Both individuals and businesses use cloud services to store and process data. Since the cloud is a public infrastructure, sensitive data must be protected. Cloud service providers and public access, including eavesdroppers, must often be protected. The present invention disclosed herein is a system for data encryption based on cloud cryptography and method thereof comprising of the functional module (101), decrypting module (102), database unit (103), converter (104), intelligent generator (105), and user interface (106); used to protect the data stored in the cloud securely. The present invention contains a cloud-based encoder for encoding the data into binary format. In the present invention, a decrypting module in the cloud communicates with a database unit for efficient storage of encrypted data, providing a functional module in cloud communication with the decrypting unit. The functional module in cloud communication with components to support an efficient database unit offers a converter for the stored encrypted data to provide a text or binary file format representation of the other format data and encrypt the data.

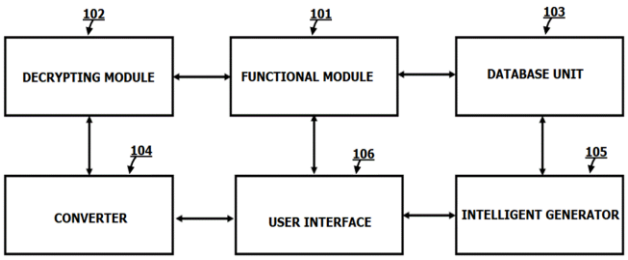

21: 2022/12103. 22: 2022/11/07. 43: 2023/05/12
51: G06K
71: VISHWAKARMA INSTITUTE OF TECHNOLOGY
72: MAHAJAN, Chandrashekhar, DESHPANDE, Rupali S., SHINDE, Pratik P., SHINDE, Samiksha S., SHINDE, Nupur S., SHINDE, Prathamesh U., SHINDE, Rutuja S.
54: GESTURE LANCE
00: -
Accordingly following invention provides a gesture recognition system for human computer interface which successfully detects the signs and symbols of a ASL as trained for detection. It rarely detects the false symbols but it is accurate and fast enough. Even if the training and detection images are different then also our project is capable of detecting the symbol with the accuracy and confidence of 96%. Some more features can be added in future like a better GUI, wide range of sign detection and converting signs and symbols into text as well as in the form of audio. Present invention demonstrates the most efficient method for transliterating 26 static ASL alphabet movements. In our project, hand gestures would be identified, and alphabets would be recognized based on hand gestures. This technology will give the voiceless a voice through the use of sign language. It will also make it easier for others to grasp sign language. This strategy will make it easier for people with disabilities to communicate.

21: 2022/12104. 22: 2022/11/07. 43: 2023/05/12
51: G06K
71: VISHWAKARMA INSTITUTE OF TECHNOLOGY
72: SHINDE, Sandip, MAHAJAN, Chandrashekhar, DESHPANDE, Rupali S., SIRSHIKAR, Shreyas Santosh, SINGH, Shruti Ajaykumar, SINHA, Akash Amrendrakumar, SIRSAT, Amitabh Bhanudas, SIRVI, Vishal Shesharam, SISODIYA, Ritika Gajendra

54: VOICE ASSISTANT SYSTEM WITH VOICE RECOGNITION INTELLIGENCE
00: -
Accordingly following invention provides a voice assistant system with voice recognition intelligence and has the capability to work with and without Internet Connectivity. The system takes the user input in form of voice or text and processes it and returns the output requested by the user in various forms. In addition, this proposed system can change the way of interactions between the mobile devices and the users. This system is designed in such a way that all the services provided by the mobile devices are accessible by the end user on the user's voice commands.Following invention is described in detail with the help of Figure 1 of sheet 1 showing block diagram of proposed invention.

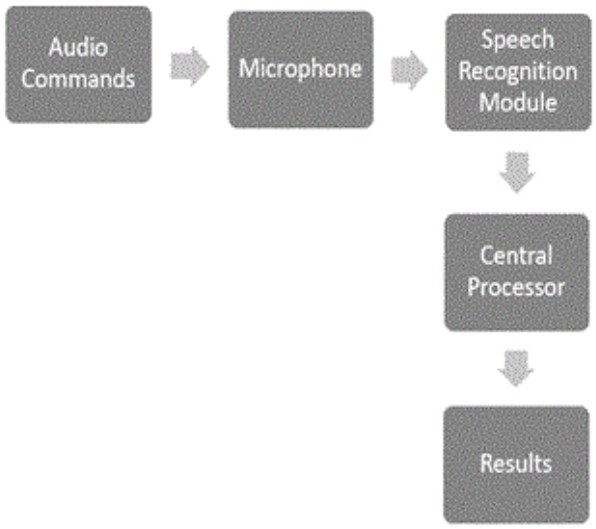

21: 2022/12105. 22: 2022/11/07. 43: 2023/05/12
51: C25D
71: Samadrita Das, Rabin Paul, Gadadasu Purnachandra Rao, Prof. Trupti Ranjan Lenka, Prof. Fazal Ahmed Talukdar, Ravi Teja Velpula, Prof. Hieu Pham Trung Nguyen
72: Samadrita Das, Rabin Paul, Gadadasu Purnachandra Rao, Prof. Trupti Ranjan Lenka, Prof. Fazal Ahmed Talukdar, Ravi Teja Velpula, Prof. Hieu Pham Trung Nguyen
54: A DEVICE FOR DESIGNING HAFNIUM (IV) OXIDE (HFO2)/ SILICON DIOXIDE (SIO2) ENCAPSULATION-BASED III-NITRIDE MULTI-QUANTUM WELL NANOWIRE WHITE-LED
00: -
A device (100) for designing Hafnium(IV)oxide (HFO2)/ silicon dioxide (SiO2) Encapsulation-based III-Nitride Multi-Quantum Well Nanowire White-LED, wherein the device (100) comprises of: a substrate (102) made up of sapphire having a thickness of 50-70µm;a Gallium Nitride (GaN) layer (104) having a p-doped, an n-doped layer, a plurality of quantum wells (QW) and quantum barriers (QB), wherein the proximal end of the n-doped layer is mounted on distal end of the substrate; an electron blocking layer (EBL) (106) sandwiched between the n-doped layer and the p-doped layer such that proximal end of the EBL touches the distal end of the n-doped layer and distal end of the EBL touches the proximal end of the p-doped layer; and a bi-layer (108) having HfO2/SiO2 nanoparticles having proximal end positioned on distal end of the of p-doped layer to maximize transparency for short-wavelength light.

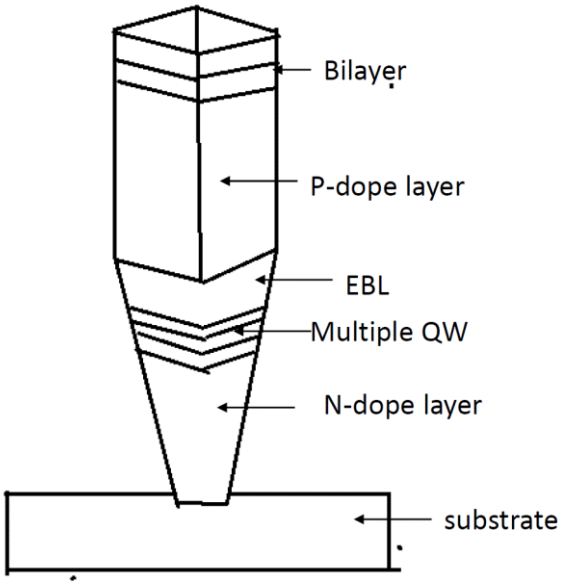

21: 2022/12118. 22: 2022/11/07. 43: 2023/05/12
51: B08B
71: DUBEY, Manju N., DHOBLE, Sanjay J.
72: DUBEY, Manju N., DHOBLE, Sanjay J.
54: AN AUTOMATIC LIBRARY BOOKSHELF CLEANING ROBOTIC DEVICE
00: -
The present invention relates to an automatic library bookshelf cleaning robotic device wherein a central shaft is made up of MS Pipe with rack and pinion gear arrangement used when converting rotational movement to linear motion (or vice versa), this arrangement allows Cleaning Deck to move up and

down; a vacuum arm is a telescopic hollow pipe attached with the dust collecting nozzle at one end and the vacuum chamber at another side wherein vacuum pressure is created by rotating a motor fan and dust is collected in a dust collector bag; a telescopic hydraulic arm is a special design of a hydraulic cylinder as well as pulley system which provide an exceptionally long output travel from a very compact retracted length wherein typically the collapsed length of a telescopic cylinder is 20 to 40% of the fully extended length depending on the number of stages; a smooth feathery material wrapped on the rotary shaft mounted perpendicular to the Instrument, this movable brush moves up and down vertically and scrubs dust between two surfaces; a smooth feathery material wrapped on the rotary shaft mounted horizontally to the Instrument; an air nozzles are provided for blowing air, are internally attached to the compressor; and a natural air from the surrounding area is compressed and stored in the tank and blown towards the surface cleaning area as and when required through air nozzles.

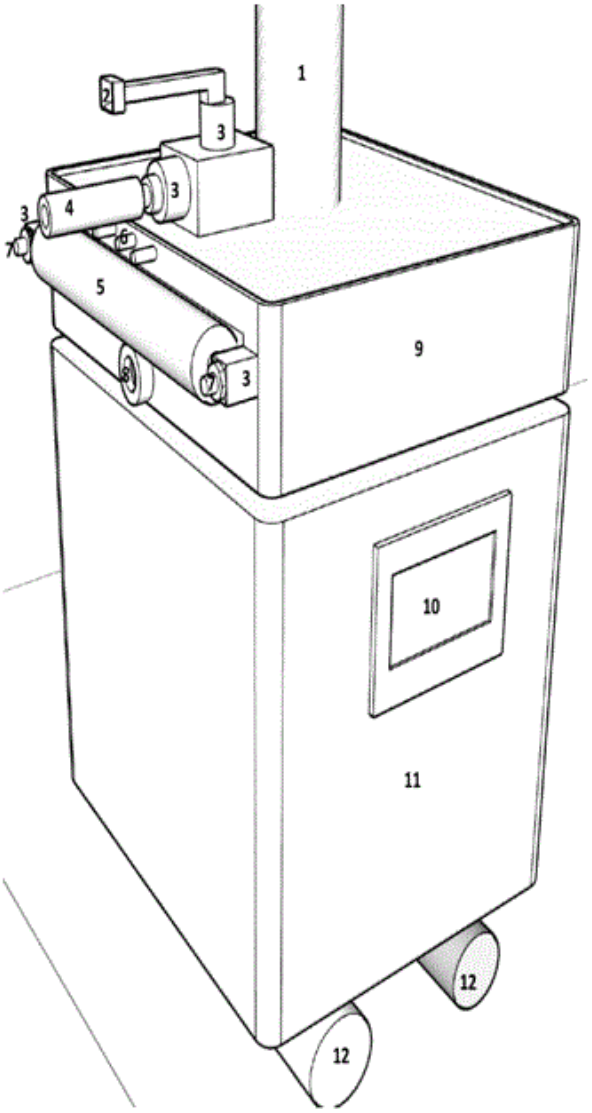

21: 2022/12119. 22: 2022/11/07. 43: 2023/05/12
51: C08K
71: PARALE, Prashant N., KADAM, Abhijeet R., DABRE, Kamlesh V., NAKHATE, Abhivilas S., DHOBLE, Sanjay J.
72: PARALE, Prashant N., KADAM, Abhijeet R., DABRE, Kamlesh V., NAKHATE, Abhivilas S., DHOBLE, Sanjay J.

54: SYNTHESIS PROCESS OF ORANGE-DEEP RED EMITTING SM3+, EU3+, PR3+ TRIPLE ACTIVATED KBA2(PO3)5 PHOSPHITE GLASS FOR WLEDS

00: -

The present invention relates to a synthesis process of orange-deep red emitting Sm3+, Eu3+, Pr3+ triple activated KBa2(PO3)5 phosphite glass for WLEDs. As a kind of lanthanide activated luminescent materials, development of rare earth activated

luminescent glasses is one of the promising trends in the modern luminescence research. In the proposed work, Sm3+, Eu3+, Pr3+ triple activated KBa2(PO3)5 phosphite glasses have been prepared by melt quenching technique for the first time. XRD pattern of the proposed glass sample shows amorphous nature but most intense peak is get matched with the standard ICSD database of KBa2(PO3)5 material. Photoluminescence study of Sm3+, Eu3+, Pr3+ triple activated KBa2(PO3)5 phosphite glass sample shows deep red emission peaks under UV excitations which covers orange-red region. These all results of the proposed sample proving its worth in the WLEDs and solid state lighting applications.

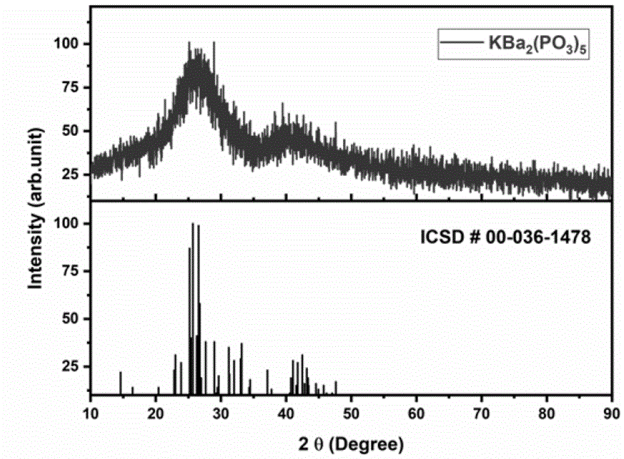

21: 2022/12120. 22: 2022/11/07. 43: 2023/05/12
51: A61B
71: CHALAKH, Sonali, DHOBLE, Sanjay J.
72: CHALAKH, Sonali, DHOBLE, Sanjay J.

54: A KATI BASTI INSTRUMENT FOR LOW BACK PAIN

00: -

The present invention relates to a kati basti instrument for low back pain wherein oil treatment container device is made up of non-conducting soft silicon composite, that prevents passage of current from container to body of the patient under treatment oil used for the treatment is heated upto 40OC or as per requirement of the patient using metallic element. The proposed instrument fabricated with oval shape good elastic composite base that directly touches special area of back, directly supporting body surface and oil container.

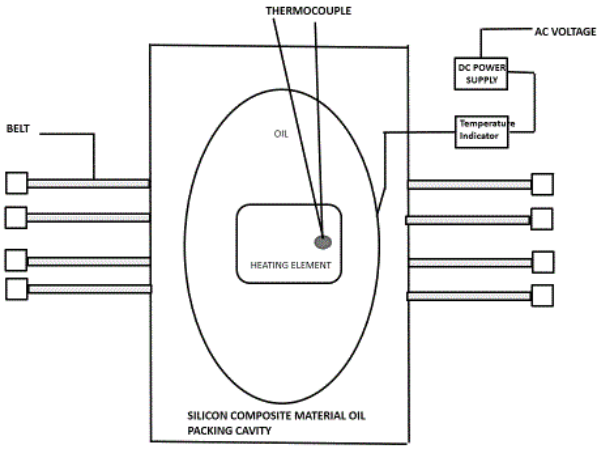

21: 2022/12178. 22: 2022/11/08. 43: 2023/05/12
51: D21H
71: PAPETERIE ZUBER RIEDER, CENTRE NATIONAL DE LA RECHERCHE SCIENTIFIQUE, UNIVERSITE DE BORDEAUX, INSTITUT POLYTECHNIQUE DE BORDEAUX
72: LE GOUE Erwan, COMA Véronique, GRELIER Stéphane, HAM-PICHAVANT Frédérique
33: FR 31: FR2005654 32: 2020-05-28

54: METHOD FOR OBTAINING A FIBROUS PREPARATION FOR IMMERSION-RESISTANT OPAQUE PAPER

00: -

The present invention relates to a method for obtaining a fibrous preparation for manufacturing a paper having significant water repellency and opacity in the dry or wet state, characterised in that it comprises at least the following steps: - suspending fibres in water, - adding calcium salts to the fibres, - adding a source of carbonate salts in the form of an aqueous solution, - stirring the resulting mixture for a time sufficient to allow calcium carbonate particles to be precipitated, - adding a solution of fatty acid salts heated to a temperature which corresponds to the micellisation temperature of the fatty acid salts and takes into account the critical micellar concentration of the fatty acid salts, - stirring the mixture thus obtained for a time sufficient to allow the fatty acids to be absorbed at the surface of the calcium carbonate particles and to obtain the desired fibrous preparation.

21: 2022/12197. 22: 2022/11/09. 43: 2023/05/19
51: A01N
71: BOTHA, MARTIN
72: BOTHA, MARTIN

33: ZA 31: 2021/09993 32: 2021-12-06
54: COMPOSITION AND METHOD FOR SUPPRESSING SUNBURN AND BROWNING IN PLANTS AND PLANT PARTS
00: -
The invention relates to a composition to combat sunburn on crops, seeds, seedlings, vegetables, fruit, plants, and plant parts. The sunscreen comprises of an emulsion that is formed by a matrix of organic acids, glycols, sulfoxides, pinenes to form an emulsion in alcohol. The treatment of both the fruit and foliage by the described invention significantly reduced damage caused by sunburn, especially through Ultraviolet (UV) radiation, high intensity light or heat stress. The invention is diluted in water and applied to the area in which the sun protection is desired.

21: 2022/12367. 22: 2022/11/14. 43: 2023/05/12
51: F24C
71: VISHWAKARMA INSTITUTE OF TECHNOLOGY
72: SHILASKAR, Swati N., BHOSALE, Tejaswini, GUNJAL, Manas, GUJARATHI, Ishan, GUNDAWAR, Ayush, GUPTA, Shubhankar, GUPTA, Vedant
54: A SYSTEM FOR AUTOMATIC KITCHEN EXHAUST
00: -
Inventors have designed a simulation model on Tinkercad about Automatic Kitchen Exhaust System, using UNO Arduino, Gas sensor, Temperature sensor and many other components. Sometimes, while working in the kitchen, there is a huge possibility, that we may forget to switch ON the exhaust. Such negligence can be very dangerous and hazardous.Our main idea is to design a model, which Automatically turns on the exhaust, as soon as the Gas burner is turned ON and should turn OFF, when none of the gas burner is turned on. For an effective and accurate working of the previous mentioned criteria we have made a fool proof plan along with flowchart and methodology using color sensor for making an Automatic Kitchen Exhaust. Due to unavailability of color sensor in Tinker CAD and Proteus we have not made a simulation of this frugal innovation. Excluding the frugal innovation idea, we have also made use of the temperature sensor, which again turns on the exhaust automatically, after detecting rise in temperature.

21: 2022/12368. 22: 2022/11/14. 43: 2023/05/12
51: G06F
71: VISHWAKARMA INSTITUTE OF TECHNOLOGY
72: MARATHE, Ashutosh S., RAJPUT, Vaishali, JAIN, Manas, JAIN, Vishwas, JAGTAP, Simran, JAIN, Eshaan, JAIN, Ketan
54: A VIRTUAL ASSISTANT FOR SMART HOME AND AUTOMATION APPLICATIONS
00: -
In 21th century, everything is automated and we are fast-moving towards advanced technology. One such creation is a virtual assistant. We can ask questions from machines and can interact with them by using the virtual assistant technology. The present study provides a new idea of a voice-controlled gadget that detects speech, processes the request, and details of other associated information. The main task of a desktop assistant is to minimize use of keyboard, mouse, touch pen etc. This application we can use to save time and reduce human effort. The most famous applications are SIRI, Google Assistant, Alexa which help users to communicate with their device like phone or mobile. SPIDY is also such a type of application, which is used for desktop. It takes input through voice and it is not only beneficial to the normal peoples but also for those who are visually impaired. Spidy is a Digital Life Assistant in this project that primarily uses human communication methods such as instant messaging and voice to establish two-way communications between a human and his assistant, such as playing music, assisting in sending emails, and assisting in wikipedia searches, among other things.AS data security is a major concern in today's world,that’s why we have include face unlock feature so that our users data will be more secured. Since voice is the primary mode of communication in our project, the Virtual Assistant is essentially a speech recognition programme. The term "speech technology" actually refers to two the Virtual Assistant is essentially a speech recognition programme. The term "speech technology" actually refers to two different technologies: synthesizers and recognizers. A speech synthesizer takes an audio stream as input and outputs an audio stream. On the other hand, a speech recognizer works in the opposite direction. It accepts an audio stream and converts it to text transcription. The voice is a

signal that contains an infinite amount of data. Our goal is to develop more and more functionalities that can assist humans in their daily lives while also reducing their effort. In our evaluation, we ensure that all of these features are operational. For accuracy, we tested this on two speakers (1 female and 1 male).

21: 2022/12369. 22: 2022/11/14. 43: 2023/05/12
51: G08G
71: VISHWAKARMA INSTITUTE OF TECHNOLOGY
72: SHILASKAR, Swati N., KAKADE, Surabhi, DABERAO, Shon D., DADMAL, Jidnyasa A., DABADE, Mayur B., CHOURASIYA, Sunny M., CHULE, Bhumika V.
54: ZEBRA CROSSING SAFETY DEVICE
00: -
According to the road accident report of Union Transport Ministry,62 pedestrians die daily in India, up 84% in years, therefore the huge reintroduction of crossover on all major roads in metropolitan cities recently is timely and worthwhile. For reducing such fatality rate, our proposed paper prevents these accidents by introducing a modern & user-friendly smart zebra crossing device. Our overall project design is based on esp32 CAM with Arduino programming & sensors with solar power. This device will be definitely more effective than existing zebra crossing devices in all over India. This device will be helpful for visually impaired people by directing them with sound. In addition, if ignorant driver crosses the Zebra Cross Lane in red signal, device will capture the photos of their vehicle, can further punish by taking find through license plate. This is with the view at making the road traffic environment safer for pedestrians by marinating systemic balance between pedestrian, traffic & proper road functionality.

21: 2022/12370. 22: 2022/11/14. 43: 2023/05/12
51: H04L
71: VISHWAKARMA INSTITUTE OF TECHNOLOGY
72: MARATHE, Ashutosh S., RAJPUT, Vaishali, JAYBHAYE, Shweta, JAYAPPA, Atharva, JAYBHAYE, Ankit, JAYBHAYE, Vishwadhar, CHAUDHARI, Jayesh
54: A BLOCKCHAIN ENABLED DECENTRALIZED VOTING SYSTEM
00: -
Voting is a fundamental part of any organization which helps organizations to take important decisions after taking common opinions from others and help methodically implement any idea or decision. But current voting methods like ballot boxes and digital voting systems face a lot of security threats like fake votes, malware attacks, DDoS attacks, alteration and manipulation of votes, etc. This creates a feeling of mistrust amongst the traditional voting systems. In the proposed system, the use of blockchain technology minimizes the flaws of the existing traditional voting system. Voting is an integral part of any organization which helps organizations to take important decisions after taking common consent from others and help implement any idea or expressing an opinion or procedurally make a decision. But current voting methods like ballot boxes and digital voting systems face a lot of security threats like DDoS attacks, fake votes, alteration and manipulation of votes, malware attacks, etc. This creates a sense of mistrust amongst the traditional voting systems. In the proposed system, we are trying to work on the flaws of the traditional voting system using blockchain technology. As blockchain is a peer-to-peer networkit is decentralized hence not a single person or authority is controlling the system. That builds trust and increases the involvement of the participants as you can vote from your phone or computer or even when you are out ofthe station.

21: 2022/12371. 22: 2022/11/14. 43: 2023/05/12
51: C07D
71: Dr. Santosh Kumar Verma, Dr. Yogesh Vaishnav, Dr. Kuntal Das, Soumitra Tiwari, Sudha Muthusamy, Dr. Keshamma Entoori, Dr. Rameshwari Verma, Dr. Rakesh Kadalipura Puttaswamy, Dr. Achal Mishra, Vinay Sagar Verma
72: Dr. Santosh Kumar Verma, Dr. Yogesh Vaishnav, Dr. Kuntal Das, Soumitra Tiwari, Sudha Muthusamy, Dr. Keshamma Entoori, Dr. Rameshwari Verma, Dr. Rakesh Kadalipura Puttaswamy, Dr. Achal Mishra, Vinay Sagar Verma
54: A METHOD FOR SYNTHESIZING NOVEL SUBSTITUTED DERIVATIVES OF OXADIAZOLE AS POTENT ANTICONVULSANT AND ANTIMICROBIAL AGENT
00: -

The present disclosure relates to a method for synthesizing novel substituted derivatives of oxadiazole as potent anticonvulsant and antimicrobial agent. In the present disclosure 12 different derivatives of oxadiazole is prepared by using three different schemes. The synthesized compounds are characterized and then a biological evaluation is performed for assessing their anticonvulsant and antimicrobial activities. The results showed that all the compounds possess anticonvulsant activity and second and eighth compound are most and least active compounds, respectively. Furthermore, the results obtained from antimicrobial activity showed that, sixth and ninth compound are most active and least active for anti-microbial activity, respectively. The results from the present disclosure conclude that the prepared derivatives are potential anticonvulsant and antimicrobial agents.

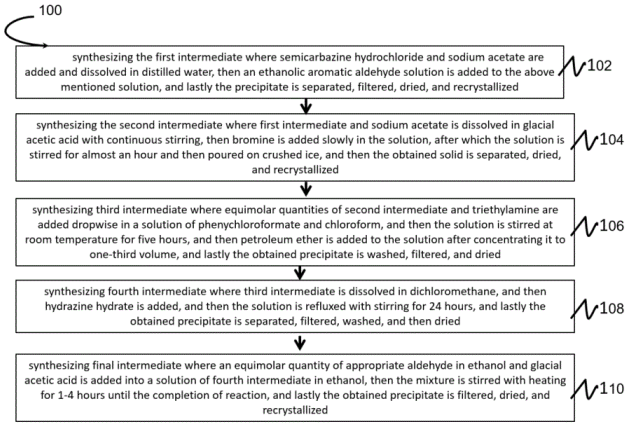

21: 2022/12372. 22: 2022/11/14. 43: 2023/05/12
51: C04B
71: Dr. AMBIKA KUITY, MOHAMMED JAVEED
72: Dr. AMBIKA KUITY, MOHAMMED JAVEED
54: A METHOD FOR MANUFACTURING FLY-ASH PELLETS WITH PROVISION OF FIBERS
00: -
The present disclosure relates to a method for manufacturing fly-ash pellets with the provision of fibers. In the present disclosure, manufacturing of the fly-ash pellets with fibers using laboratory method is carried out and this method provides the easiest way for manufacturing the pellets without needing any skilled person or any heavy machine. Fly-ash pellets made using the laboratory method have the proper shape and size as their final result, whereas fly-ash pellets made using a disc pelletizer do not. The manufactured artificial aggregates are employed as a partial or full replacement for coarse aggregates in the construction of rigid pavements, buildings, and other structures. They are beneficial in nearly all applications where concrete is utilized.

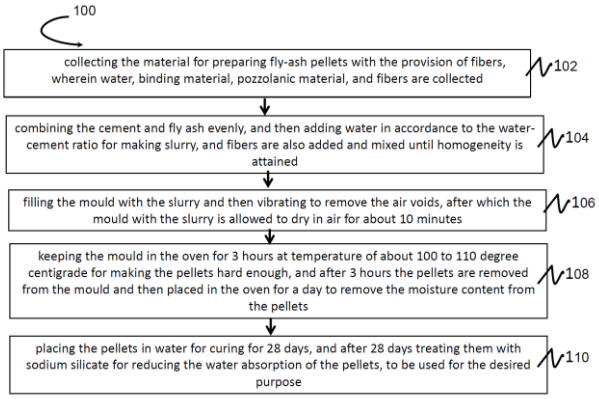

21: 2022/12384. 22: 2022/11/14. 43: 2023/05/12
51: G01N
71: Zhejiang Academy of Agricultural Sciences
72: Wu Weijie, Gao Haiyan, Chen Hangjun, Fang Xiangjun, Mu Honglei, Han Yanchao, Niu Ben
54: EFFICIENT EXTRACTION METHOD OF AMYGDALIN FROM SEMEN PERSICAE AND APPLICATION THEREOF
00: -
The invention discloses an efficient extraction method of amygdalin from semen persicae and its application, which comprises the following steps: cleaning semen persicae of white peach, completely drying them, and grinning them into powder; defatting the powdered semen persicae in petroleum ether for 2-3 times, performing vacuum filtration, and volatilizing the petroleum ether in a fuming cupboard to obtain defatted powder; and adding the defatted powder into ethanol, performing ultrasonic extraction and vacuum filtration, evaporating and concentrating the filtrate, and freeze-drying to obtain amygdalin powder. The drying methods and parameters, ethanol concentration, ultrasonic extraction time and extraction temperature in the extraction process are specifically defined. By optimizing the process parameters to ensure the best extraction rate, and the method can be applied to the preparation of anticoagulant, hypolipidemic and hypoglycemic drugs, which provided a strong foundation for the comprehensive development and utilization of semen persicae.

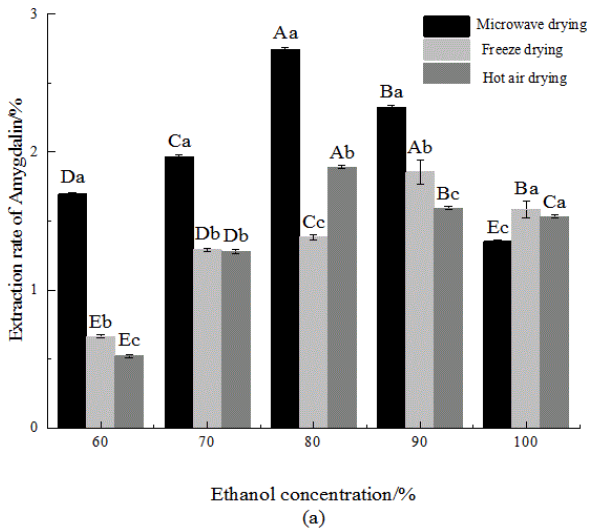

21: 2022/12526. 22: 2022/11/16. 43: 2023/03/24
51: A61K; A61P; C07D
71: Shionogi & Co., Ltd., National University Corporation Hokkaido University
72: TACHIBANA, Yuki, UEHARA, Shota, UNOH, Yuto, NAKAHARA, Kenji, TAODA, Yoshiyuki, YAMATSU, Yukiko, ANDO, Shigeru, SASAKI, Michihito
33: JP 31: 2021-068672 32: 2021-04-14

54: TRIAZINE DERIVATIVE HAVING VIRUS PROPAGATION INHIBITORY EFFECT, AND PHARMACEUTICAL COMPOSITION CONTAINING SAME

00: -

The present invention provides a compound exhibiting a coronavirus 3CL protease inhibitory effect and pharmaceutically acceptable salts thereof, and a pharmaceutical composition containing the same. Further provided are crystals that are useful as a drug substance, and a pharmaceutical composition containing the same. The compound represented by formula (1) or pharmaceutically acceptable salts thereof.

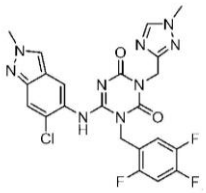

(1)

21: 2022/12529. 22: 2022/11/16. 43: 2023/05/22
51: F16L
71: HEBEI GEO UNIVERSITY
72: CAO, Xiuling, YUE, Muci, CHEN, Song, YUAN, Ying, NIU, Jianguang, XU, Haiyan, WANG, Junfeng, XU, Hongrui, ZHANG, Siru, WANG, Xingkuo, GAO, Yunsheng, LI, Qingyao
33: CN 31: 202111465951.2 32: 2021-12-03

54: REINFORCED ANTI-SEISMIC STRUCTURE SUITABLE FOR URBAN UNDERGROUND COMPREHENSIVE PIPE GALLERY

00: -

The invention discloses an enhanced anti-seismic structure suitable for urban underground comprehensive pipe gallery, which comprises a polygonal frame, the polygonal frame comprises an outer frame and an inner frame arranged inside the outer frame, and the vertex of the inner frame is fixedly connected with the bending position inside the outer frame through a support rod; The side of the outer frame is provided with an installation groove for pipe installation, and the installation groove corresponds to the side of the outer frame one by one. The outer frame is located at the outer side of the installation groove and can be disassembled to install a limit frame. A limit mechanism for fixing the pipe is fixedly installed on the limit frame. In the invention, the outer frame is located at the outer side of the installation slot and can be disassembled to install a limited position frame. Screw in the screw, drive the lifting block to extrude the spring, make the top block extrude the pipe surface, and fix the pipe. By setting a polygonal frame, multiple pipes can be installed at the same time, and the overall stability can be improved under the connection and support of the support rod.

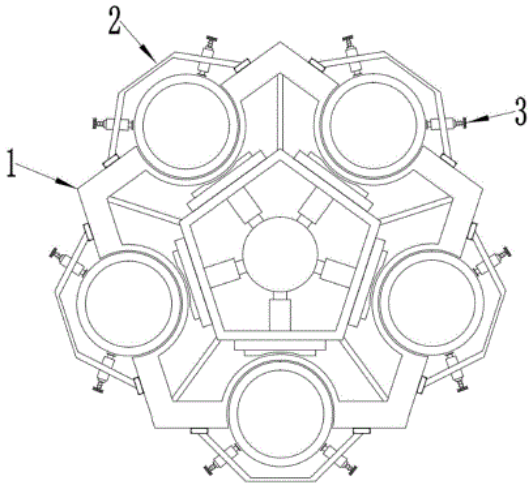

21: 2022/12565. 22: 2022/11/17. 43: 2023/05/22
51: F42D
71: DETNET SOUTH AFRICA (PTY) LTD
72: SCHLENTER, Craig, YATES, Marinus
33: NA 31: NA/P/2020/0014 32: 2020-05-15
54: BLASTING SYSTEM
00: -
A blasting system which includes a number of roving GPS receivers, and associated taggers, which communicate with one another and with a control mechanism, and a reference GPS receiver which transmits RTCM corrective positional data which is stored at each roving GPS receiver to improve the accuracy of coordinate determinations for boreholes.

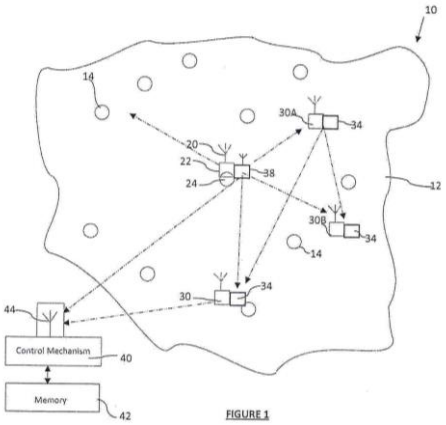

21: 2022/12566. 22: 2022/11/17. 43: 2023/05/22
51: F42C; F42D
71: DETNET SOUTH AFRICA (PTY) LTD
72: MULLER, Elmar Lennox, MEYER, Tielman Christiaan, LIEBENBERG, Abraham Johannes
33: NA 31: NA/P/2020/0011 32: 2020-04-29
54: A SAFETY ARRANGEMENT FOR A WIRELESS BLASTING SYSTEM
00: -
A safety arrangement for a wireless blasting system which includes a plurality of wireless detonator assemblies located at a blast zone wherein each route which provides access to the blast zone is monitored to detect removal of a wireless detonator assembly which is in an operative mode from the blast zone.

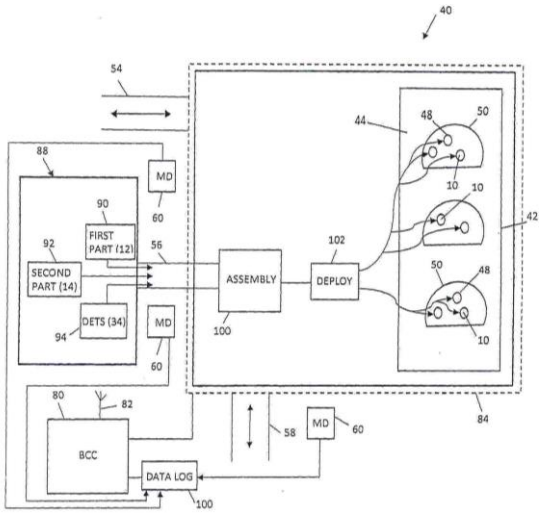

21: 2022/12794. 22: 2022/11/24. 43: 2023/04/11
51: B21J; C22C
71: Anhui Anhuang Machinery Co., Ltd
72: HUANG, Changwen, ZHAO, Zhongli, SONG, Jiabing, XUE, Yongjie
33: CN 31: 202110894658.1 32: 2021-08-05
54: HOT-FORGING DIE STEEL AND MANUFACTURING METHOD THEREOF AS WELL AS PISTON FORGING MOLDING DIE AND MANUFACTURING METHOD THEREOF
00: -
The present application provides a hot-forging die steel and a manufacturing method thereof as well as a piston forging molding die and a manufacturing method thereof. The hot-forging die steel provided by the present application comprises the following chemical components in percentage by mass: 0.35-0.41% of C, 0.40-0.60% of Si, 0.40-0.50% of Mn, less than or equal to 0.025% of P, less than or equal to 0.015% of S, 4.90-5.10% of Cr, 1.5-1.6% of Mo, 0.35-0.40% of V and the balance of Fe. The present application also provides a manufacturing method of a piston forging molding die, comprising the

following steps: successively performing crude processing, preheating treatment, quenching, high-temperature tempering and finishing on the hot-forging die steel to obtain a die blank; and performing surface reinforcement treatment on the die blank to obtain the piston forging molding die. Experimental results show that the die made of the hot-forging die steel provided by the present application has a service life of 7000-10000 forging pieces.

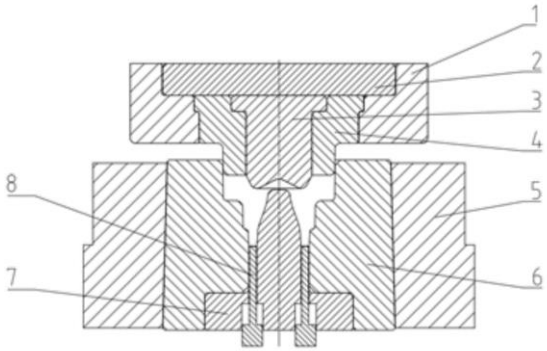

21: 2022/12830. 22: 2022/11/25. 43: 2023/05/12
51: A01B
71: Hunan Economic Geography Technology Development Co., Ltd.
72: ZHANG Pengbo, WEI Xiao, ZHAN qiang, OUYANG Ningxiang
54: A METHOD OF ECOLOGICAL SOIL REMEDIATION
00: -
The present application relates to a soil ecological remediation method, which is related to the field of soil treatment. The soil ecological restoration method includes the following steps: S1. tilling the soil of the plot to be restored, drying it for 2-5 days after tilling, and then spreading a layer of soil restorer on the surface of the soil; S2. covering the tilled soil with a layer of mulch to cover the soil restorer, and then opening a number of seepage holes on the mulch at intervals; S3. spraying water intermittently and evenly on top of the mulch, with the water entering the soil through the seepage holes on the mulch;S4. intermittent spraying of water on the mulch is stopped after 20-45 days, moisturizing for 3-5 days, then the mulch is removed and dried for 5-15 days; S5. plants are planted on the dried soil, said plants are harvested and made harmless after maturity; said plants include at least one of lobelia, mustard, baoshan corydalis and curculio. This application has the effect of effectively treating heavy metal contamination of the soil while rapidly fertilising the soil.

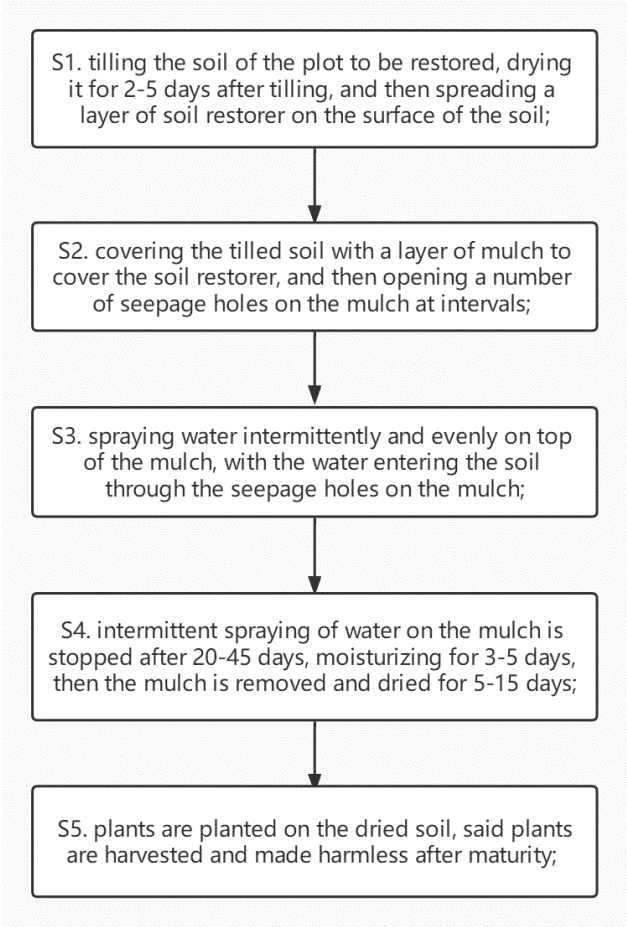

21: 2022/12831. 22: 2022/11/25. 43: 2023/05/12
51: A01G
71: Guizhou Zhengcheng Agricultural Technology Development Co., Ltd, Institute of Crop Germplasm Resources/Institute of Modern Chinese Herbal Medicines, Guizhou Academy of Agricultural Sciences
72: Gong GuangLu, Cheng Zheng, Luo TingQing, Cheng Peng
54: PREPARATION METHOD OF DICTYOPHORA RUBROVALVATA M.ZANG MUSHROOM STICK
00: -
The invention discloses a preparation method of Dictyophora rubrovalvata M.Zang mushroom stick, which comprises the steps of material composition, bagging, sterilizing, inoculating and culturing. According to the characteristics of planting and growth, the selection of raw materials and the operation of culture conditions are standardized, and

the mushroom sticks suitable for earth covering cultivation are prepared, which provided guiding significance for large-scale and efficient planting of Dictyophora rubrovalvata M.Zang.

21: 2022/12832. 22: 2022/11/25. 43: 2023/05/12
51: A01G
71: Guizhou Zhengcheng Agricultural Technology Development Co., Ltd, Institute of Crop Germplasm Resources/Institute of Modern Chinese Herbal Medicines, Guizhou Academy of Agricultural Sciences
72: Luo TingQing, Gong GuangLu, Cheng Zheng, Cheng Peng
54: UNDERGROWTH PLANTING METHOD OF DICTYOPHORA RUBROVALVATA M.ZANG
00: -
The invention discloses an undergrowth planting method of Dictyophora rubra, which comprises the following steps: comprising the following steps: ridging in forest land to make border, sterilizing the soil, selecting high-quality mushroom sticks, removing bags and sterilizing them, laying them side by side at a distance of 5-10 cm on the border surface, and then covering them with soil with a thickness of 8-12 cm to form turtle-back border surface; under the condition of temperature of 22-26 degree Celsius, controlling the humidity and the fertilizer, cultivating, and harvesting at embryo stage; placing the harvested embryos in the sterilized fruiting room, and the temperature, humidity, ventilation and light are controlled, and carrying out harvesting in fruiting stage. Relying on the bag-removing and soil-covering cultivation technology of Dictyophora rubrovalvata M.Zang fermented material, the invention provides a standardized planting technology under the forest, improves the resource utilization, and provides guidance for the expanded cultivation of Dictyophora rubrovalvata M.Zang.

21: 2022/12833. 22: 2022/11/25. 43: 2023/05/12
51: G06F
71: Huainan Normal University
72: Liu Bing, Cheng Huanhuan, Zheng Chengli
54: A CLASSIFICATION METHOD OF FINANCIAL TIME SERIES BASED ON LOW FREQUENCY INFORMATION REPRESENTATION
00: -
The invention provides a financial time series classification method based on low-frequency information representation, and relates to the technical field of financial time series classification. The financial time series classification method based on low-frequency information representation comprises the following steps: S1. The original time series is first standardized, and then the CEEMDAN method is used to decompose the standardized series. The original time series, standardized, is finally decomposed into ,S2. The permutation entropies of the IMF and the remainder are calculated, and the permutation entropies are labeled into high frequency and low frequency categories by using the Fisher optimal segmentation method for ordered samples. When the method is applied to time series representation, it is often seen in noise reduction smoothing processing for removing a small amount of high-frequency information or multi-scale integration processing for not removing any information. The method finds a new way to realize the low-frequency information representation of time series by discarding nearly half of the information and retaining only the low-frequency information, so it is suitable for time series with high-frequency information seriously disturbed.

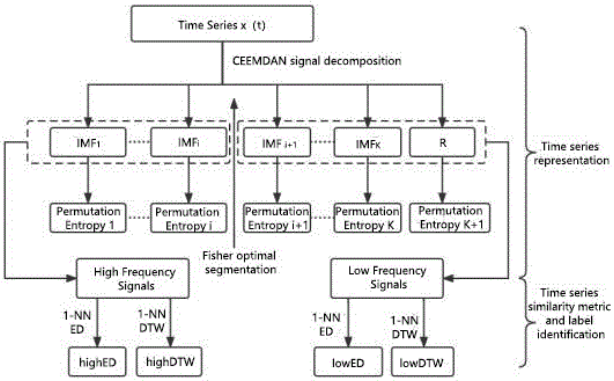

21: 2022/12834. 22: 2022/11/25. 43: 2023/05/12
51: G06K
71: HuaiNan Normal University
72: Liu Qingyu, Liu Lei, Chen Lei, Li Xiaoyan, Meng Xuetao, Xiao Qiang
54: HIELD REPAIR METHOD OF HUMAN FACE MASK FOR EPIDEMIC PREVENTION AND CONTROL
00: -
The invention provides a method for repairing the shielding of a human face mask for epidemic

prevention and control, and relates to the technical field of face inpainting. The method for shield and repairing that human face mask for epidemic prevention and control comprise the following steps of: S1. Facial mask data set production, on the basis of CelebA public data set, select the front face part to add masks, and produce facial mask data set, mask types cover various common shapes and colors of masks; S2. The face inpainting method uses the generative adversarial network model to train the mask data set, so as to generate the repair model. Accord to that method provided by the invention, the improve and generative adversarial network model is utilized to carry out the training of the repair model, so that the face area sheltered by the mask can be effectively repaired, and the repaired image is natural and coherent, thereby effectively carrying out face recognition and other operations.

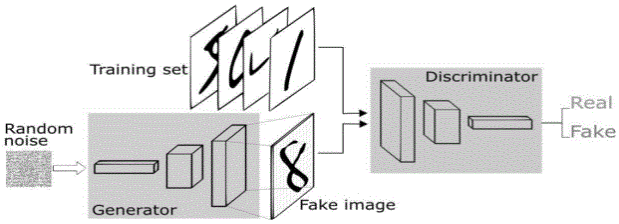

21: 2022/12835. 22: 2022/11/25. 43: 2023/05/12
51: A01G
71: Guizhou Zhengcheng Agricultural Technology Development Co., Ltd, Institute of Crop Germplasm Resources/Institute of Modern Chinese Herbal Medicines, Guizhou Academy of Agricultural Sciences
72: Gong GuangLu, Luo TingQing, Cheng Zheng, Cheng Peng

54: PREPARATION METHODS OF LIQUID CULTURE MEDIUM AND LIQUID STRAIN OF DICTYOPHORA RUBROVALVATA M.ZANG

00: -

The invention discloses preparation methods of liquid culture medium and liquid strain of Dictyophora rubrovalvata M.Zang. The tap water is used as the liquid substrate, and further comprises the following components: 5 g/L of glucose, 25 g/L of fructose, 5 g/L of peptone, 1 g/L of yeast powder, 2.5 g/L of ammonium sulfate, 1 g/L of potassium dihydrogen phosphate, 70 g/L of sawdust and 5 g/L of corn flour. The activated Dictyophora rubrovalvata M.Zang strains are cultured in the sterilized culture plate, and transferring the hyphae to a sterilized liquid culture medium shake flask in a sterile ultra-clean workbench when more than 60 percent of hyphae biomass is inoculated into the sterilized liquid culture medium fermentation tank, control the temperature and ventilate, and culture for 15-25 days to obtain the liquid culture medium.

21: 2022/12836. 22: 2022/11/25. 43: 2023/05/12
51: E01H
71: Shandong Jiaotong University
72: Chen Renshan, Zhang Wei, Hou Changlin, Shangguan Haonan
33: CN 31: 202111543263.3 32: 2021-12-16

54: A SET OF ROADSIDE MOBILE INTELLIGENT ANTI-ICE AND SNOW-MELT EQUIPMENT

00: -

The present invention discloses a roadside mobile intelligent anti-ice and snow removal equipment comprising a control module, a mobile spraying device mounted on a roadside guardrail, a supply docking station fixed to the outside of the roadside guardrail and a road surface sensing module, the mobile spraying device comprising a base slidingly set on the roadside guardrail, a liquid reservoir fixed to the base, a spraying unit connected to the liquid reservoir and a driving mechanism for driving the base to slide on the roadside guardrail, the base being provided with a storage battery for providing power to the mobile spraying device, the supply docking station comprising a storage tank, a power supply unit, a liquid filling unit connected to the storage tank and a charging unit connected to the power supply unit. The spraying unit of the invention can be moved, using a spraying unit that can achieve a large spraying surface, wide coverage, and easy to replenish, through intelligent control, can effectively use the de-icing liquid, reduce waste.

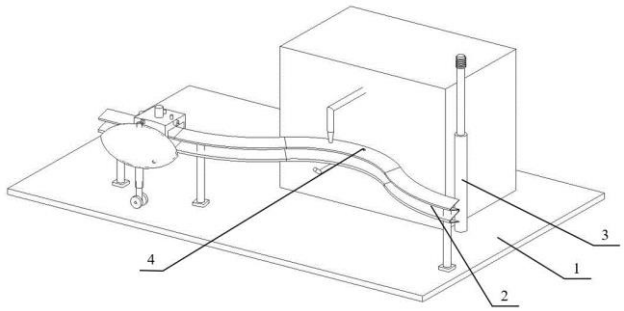

21: 2022/12837. 22: 2022/11/25. 43: 2023/05/12
51: C07D
71: Beijing Technology and Business University
72: Song Fuhang, Fu yan, Yang Na, Li Honghua, Ai Nasi
54: A COMPOUND AND ITS APPLICATIONS
00: -
The present invention belongs to the technical field of pharmaceutical applications of compounds. The present invention discloses a compound and its application in the preparation of preparations with inhibitory activity against protein tyrosine phosphatase 1B, in drugs for the treatment of type II diabetes, in hypoglycemic drugs, in hypolipidemic drugs, in weight loss drugs, and in drugs for the treatment of fatty liver disease.

21: 2022/12900. 22: 2022/11/28. 43: 2023/05/12
51: C04B
71: Suqian University
72: Zuo Gong, Sun Chuanzhi, Gao Li
33: CN 31: 202210510091.8 32: 2022-05-11
54: AN ENERGY-SAVING AND ENVIRONMENT-FRIENDLY THERMAL INSULATION MATERIAL FOR WALLS AND ITS PREPARATION METHOD
00: -
The present invention belongs to the technical field of building materials, discloses an energy-saving and environment-friendly thermal insulation material for walls and its preparation method, the preparation method is: weighing 5-15 parts of ceramic polishing waste, 20-40 parts of fly ash, 10-30 parts of ordinary silicate cement and 5-15 parts of inorganic salt; coarse grinding of ceramic polishing waste to a particle size = 20 μm, adding fly ash and ordinary silicate cement and ball milling to a particle size = 10 μm, then adding the weighed inorganic salt for wet ball milling to obtain a mixed slurry, drying the mixed slurry and crushing it at room temperature and pressing it to obtain the embryo. μm, then add the weighed inorganic salt for wet ball milling treatment to obtain the mixed slurry, the mixed slurry will be dried and crushed at room temperature and pressed into shape to obtain the embryo, and then the embryo will be microwave sintered to obtain the energy-saving and environmental protection insulation material for the wall. The present invention uses industrial waste such as ceramic polishing waste and fly ash as the base material of the insulation material, which reduces environmental pollution on the basis of achieving resource reuse and at the same time reduces the preparation cost of the insulation material of the present invention.

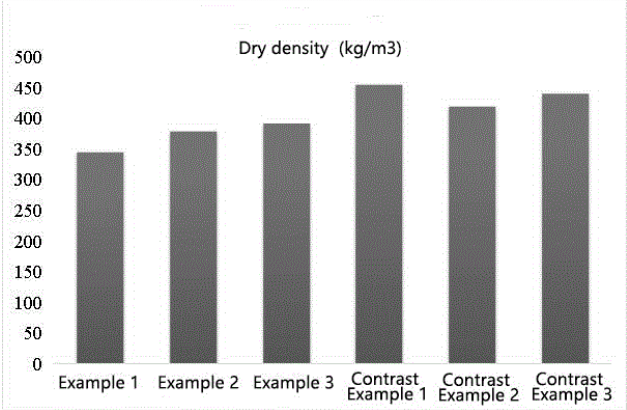

21: 2022/12904. 22: 2022/11/28. 43: 2023/03/22
51: F24F
71: YUNNAN MINZU UNIVERSITY
72: Li Yali, Zhang Yuewei
54: EASY-TO-MOUNT INTELLIGENT AIR VALVE
00: -
The present invention discloses an easy-to-mount intelligent air valve, comprising a first flange plate, a valve body and a second flange plate. A second connecting shaft is movably arranged in the center in the valve body; a rotary drive piece is arranged on the top of the valve body; the second connecting shaft penetrates through the valve body and is connected with a fluted disc; a conical gear is connected to one side of the bottom of the rotary drive piece through a shaft and is mutually engaged with the fluted disc; a hand wheel is connected to the shaft at the bottom of the rotary drive piece; and an output end of the rotary drive piece is mutually connected with the second connecting shaft. For the

present invention, by manually rotating the hand wheel, the hand wheel can make the conical gear rotate, the conical gear can make the fluted disc rotate, and then the fluted disc can make the second connecting shaft rotate, so that the valve has the effects of manual opening and closing.

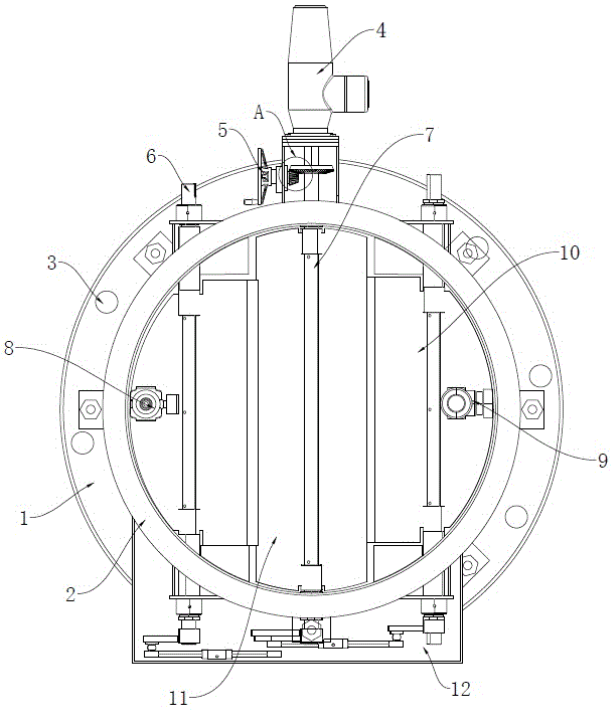

21: 2022/13179. 22: 2022/12/05. 43: 2023/04/12
51: B32B
71: UFLEX LIMITED
72: Ashok Chaturvedi
33: IN 31: 202011023791 32: 2022-06-06
54: AN ASEPTIC LIQUID PACKAGING CONTAINER
00: -
An aseptic liquid packaging container (100) is disclosed. The liquid packaging container made from a cup stock paperboard and may be a laminate structure (200b) configured to form the container. It can be a plurality of layers configured to form the laminate structure (200b) wherein at least one layer of the plurality of layers is a cup stock paperboard layer (204b).

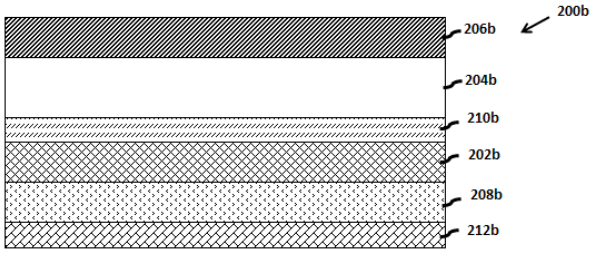

21: 2022/13200. 22: 2022/12/06. 43: 2023/04/26
51: G01S; G06F
71: Harbin Engineering University
72: GUO, Junyuan, PIAO, Shengchun, LI, Liangwen, ZHANG, Minghui
33: CN 31: 202111494099.1 32: 2021-12-08
54: THREE-DIMENSIONAL BEAMFORMING METHOD OF A MINIATURIZED VOLUME ARRAY BASED ON ACOUSTIC VECTOR HYDROPHONE
00: -
TBC

21: 2022/13404. 22: 2022/12/12. 43: 2023/05/12
51: E04B; E04H; G01H; G08B
71: SPEIRS, Michael
72: SPEIRS, Michael
33: ZA 31: 2021/10241 32: 2021-12-10
54: COMBINATION WALL AND FENCE SYSTEM WITH INTRUSION DETECTION
00: -
The invention relates to a perimeter protection system which comprises a substantially planar physical barrier. The perimeter protection system includes, in combination, a plurality of base panels, a plurality of wall panels, a plurality of fence panels and a plurality of fence posts that are configured for installation on a ground surface to define the perimeter protection system. The fence posts, wall panels and fence panels are configured for vertical positioning. The fence panels each comprise a substantially planar wire mesh panel configured for secure attachment to the fence posts. The perimeter protection system further includes an intrusion detection system comprising a vibration detection system. The vibration detection system comprises an optical fibre vibration detection system which includes a plurality of optical fibre sensors configured to extend substantially along the length of the perimeter protection system when installed.

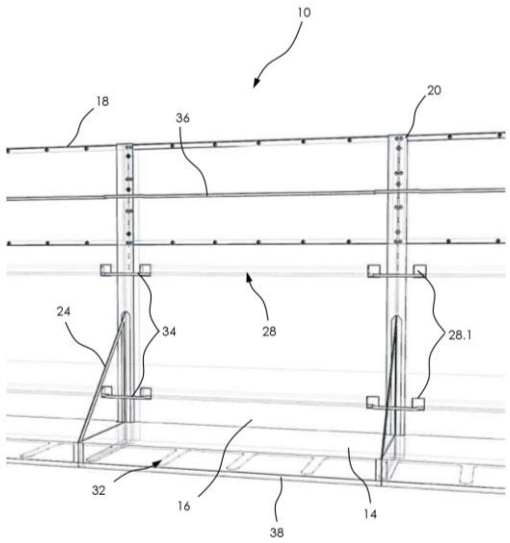

21: 2022/13406. 22: 2022/12/12. 43: 2023/02/23
51: B01J
71: ANHUI XUJING CATALYST TECHNOLOGY CO., LTD
72: Jiang Jianping, Jiang xu
54: A PRODUCTION PROCESS FOR ORGANOSILICON TERNARY COPPER CATALYSTS
00: -
The present invention provides a production process for organosilicon ternary copper catalysts and relates to the technical field of ternary copper catalyst processing.The production method of the organosilicon ternary copper catalyst described includes the following steps: high temperature hot melt, thermal insulation hot melt, water atomisation processing, vacuum dehydration, drying and insulation, vibration sieving and other steps.The present invention overcomes the shortcomings of the prior art and adopts a one-step production and regulation technology, which optimises the production process and makes the catalyst production process with the advantages of simple operation and low cost, and the method of the present invention produces catalysts with good catalytic effect and at the same time the production process is green and pollution-free, in line with environmental regulations.

21: 2022/13524. 22: 2022/12/14. 43: 2023/04/12
51: A61K; A61P
71: TARATE, Vivek, Subhash, CHOUGULE , Poonam, Nilesh, CHOUGULE, Nilesh,Balasaheb, SHINDE , Vikram, Ramchandra, SHELKE , Sandip, Sarjerao, PATIL, Sachin Vasantrao, UBALE, Amol Tanaji, KHAN, Ziyakhan Khalikhan, KULKARNI, Abhhijeet, Shashikant
72: PATIL, Sachin Vasantrao, UBALE, Amol Tanaji, KHAN, Ziyakhan Khalikhan, TARATE, Vivek, Subhash, CHOUGULE , Poonam, Nilesh, CHOUGULE, Nilesh,Balasaheb, SHINDE , Vikram, Ramchandra, SHELKE , Sandip, Sarjerao, KULKARNI, Abhhijeet, Shashikant
54: MULTILAYERED BUCCAL PATCH OF ANTIHYPERTENSIVE DRUGS
00: -
The present invention relates to formulation comprising Indapamide and other pharmaceutical acceptable polymers. The present invention also relates to the multilayered buccal patches of Indapamide which overcome the hepatic first pass metabolism and provide controlled release in a patient compliant, noninvasive manner. The multilayered patches presented in the work can be a new solution in effective management of Hypertension in Diabetic patients

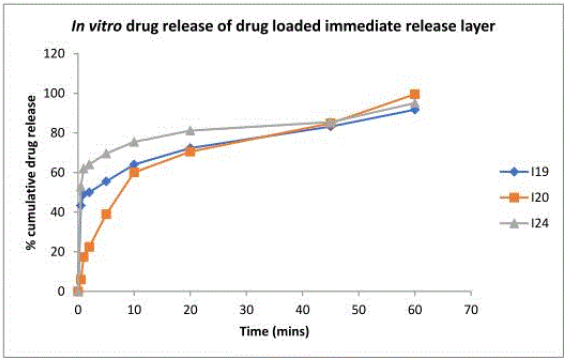

21: 2022/13525. 22: 2022/12/14. 43: 2023/04/26
51: A61K; A61P
71: TARATE, Vivek, Subhash, YADAV, Vishal, Dadasaheb, JADHAV , Rahul, Laxman, BABAR, Anandrao, Shivaji, GALGATTE, Upendra, Chandrakant, DALVI , Apeksha, Mukta, HABBU, Prasanna, Vasantrao, GUNJAL, Sachinkumar, Dnyaneshwar
72: TARATE, Vivek, Subhash, YADAV, Vishal, Dadasaheb, JADHAV , Rahul, Laxman, BABAR, Anandrao, Shivaji, GALGATTE, Upendra, Chandrakant, DALVI , Apeksha, Mukta, HABBU, Prasanna, Vasantrao, GUNJAL, Sachinkumar, Dnyaneshwar

54: TOPICAL FORMULATION OF BERBERIS ARISTA IN INFECTIOUS WOUND HEALING
00: -
The present invention relates to topical composition comprising berberis arista, honey and other pharmaceutical acceptable excipients. Further invention relates to methods for treating infectious wound healing by using therapeutically effective amount of Berberis aristata plant or extracts with honey. The present invention further relates to extracts which are isolated from different parts of Berberis aristata plant, the preparation of such extracts, the medicaments containing said extracts, and the use of these extracts and constituents for the preparation of a medicament. The present invention also relates to the process for preparing the topical formulation of berberis aristata.

21: 2022/13647. 22: 2022/12/19. 43: 2023/03/16
51: H04B
71: Dr. Vishal Sharma
72: Dr. Vishal Sharma
54: ANALYSIS OF SINGLE PHOTON DETECTORS IN DIFFERENTIAL PHASE SHIFT QUANTUM KEY DISTRIBUTION
00: -
We analyzed differential phase shift quantum key distribution using InGaAs/InP and Silicon-APD (avalanche photodiode) as single photon detectors. Various performance parameters of interest such as shifted key rate, secure key rate, and secure communication distance obtained were investigated. We observe that after pulse effects are non-Markovian in nature which are intrinsic properties of these single photon detectors that increase the quantum bit error rate, and are one of the undesired processes which act as an obstacle in achieving the optimum values of the said performance parameters. In the current research work of optical fiber-based differential phase shift quantum key distribution, it is observed that SiAPD under frequency conversion method at telecommunication window outperforms the InGaAs/InP APD.

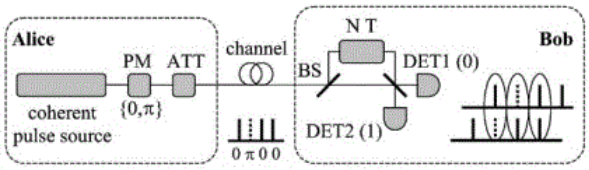

Fig. 1. DPS-QKD protocol [19]. PM refers for phase modulator, attenuator is denoted by ATT, BS refers for a beam splitter and DET refers for a detector.

21: 2023/00405. 22: 2023/01/10. 43: 2023/04/18
51: G06F
71: SOUTHWEST UNIVERSITY
72: TANG Xi, ZHANG Siyan, WU Jiagui, DENG Tao, LIN Xiaodong, FAN Li, GAO Ziye
33: CN 31: 2022229691065 32: 2022-11-08
54: HIGH-SPEED RANDOM NUMBER GENERATOR
00: -
The invention provides a high-speed random number generator, which comprises a master laser and a slave laser; the light emitted by the main laser is divided into two parts by an optical fiber beam splitter, one part of the light enters multipath optical feedback and then returns to the main laser, and finally the main laser enters chaotic state output under the disturbance of the feedback light; Part of the light is injected into the slave laser as seed light through multipath light, and the slave laser also enters chaotic state under the disturbance of the injected light. Finally, the chaotic light with enhanced bandwidth and no delay characteristics emitted from the laser is used as the chaotic entropy source of the random number generator, and after sampling, quantization and post-processing optimization, the random number sequence meeting NIST statistical test suite detection standard can be output. The high-speed random number generator provided by the invention can provide a chaotic entropy source with large bandwidth and fully eliminated time delay characteristics, is easy to generate high-speed and high-quality random number sequences and has a relatively simple structure.

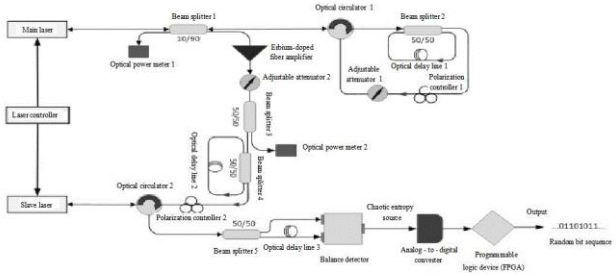

21: 2023/00572. 22: 2023/01/13. 43: 2023/05/08
51: A61K; A61P
71: TARATE, Vivek, Subhash, OTARI, Kishor Vasant, RANE , Jesika Chandan, SARODE, Suraj, Murlidhar, BENDALE, Atul Rupchand, NEMADE, Kanchan, Sudhakar, BATHE, Ritesh, Suresh, GALGATTE, Upendra Chandrakant
72: TARATE, Vivek, Subhash, OTARI, Kishor Vasant, RANE , Jesika Chandan, SARODE, Suraj, Murlidhar, BENDALE, Atul Rupchand, NEMADE, Kanchan, Sudhakar, BATHE, Ritesh, Suresh, GALGATTE, Upendra Chandrakant

54: HERBAL MASSAGE OIL FOR PAIN MANAGEMENT BY QPS TECHNOLOGY

00: -

The present invention relates to topical novel herbal massage oil for arthritic disorders and inflammation. The herbal oil composition comprises a therapeutically effective combination of oil such as Wintergreen oil (Gaultheria procumbens) 20% w/v, Mahanarayan oil 40% w/v, Kapoor (Cinnamomum camphora) 4% w/v, Tarpin oil (Turpentine) 3% w/v, Malkagni oil (Celastrus paniculatus) 3% w/v, Guggal oil (Commiphora wightii) 5% w/v, Mahamash oil 10%, Panchguna oil 5%, Pudina Satwa (Mentha arvensis) 1%, Mahavishgarbha oil 10%, Til oil (Seasamum indicum) quantity sufficient optionally along with pharmaceutically acceptable excipients by Quick Penetrating Solution (QPS) Technology.

21: 2023/00660. 22: 2023/01/16. 43: 2023/04/25
51: H02J
71: ELECTRIC POWER RESEARCH INSTITUTE OF STATE GRID XINJIANG ELECTRIC POWER CO., LTD, CHINA JILIANG UNIVERSITY
72: NAN, Dongliang, ZHAO, Qi, CHEN, Jun, ZHANG, Pengyue, ZHANG, Lu, ZHANG, Jing, LOU, Chaoyan, DUAN, Qingxi, TAN, Jinlong, PENG, Yinzhang, ZHU, Zimin, TANG, Junyi, GAO, Xing, MA, Jian
33: CN 31: 202210245803.8 32: 2022-03-14

54: POWER DISTRIBUTION METHOD FOR PHOTOVOLTAIC POWER STORAGE STATION GROUP TO PARTICIPATE IN POWER GRID STABILITY CONTROL

00: -

Disclosed is a power distribution method for a photovoltaic power storage station group to participate in power grid stability control. The method comprises: using a regional main station and substation centralized control system architecture, wherein network topology information of the present region and power control information of photovoltaic power storage stations are integrated into a regional main station; and when a power grid-side stability control apparatus requires the power in the present region to reduce or increase for the sake of an emergency control requirement, the regional main station calculating the optimal power control quantity distribution in the present region according to the magnitude of the reduced or increased power and according to the network topology information of the present region. The present invention can collect and evaluate photovoltaic storage controllable resource information of a regional power grid, and participates in power grid stability control and other auxiliary services.

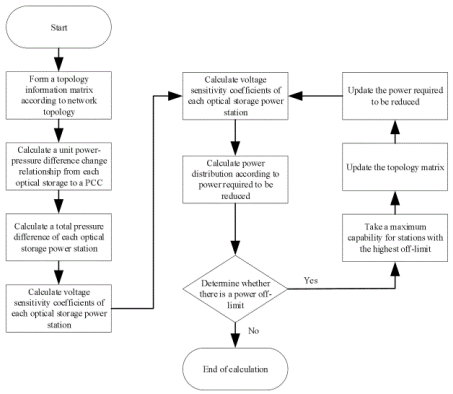

21: 2023/00694. 22: 2023/01/17. 43: 2023/04/25
51: F27B; F27D
71: Hengyang Kaixin Special Material Technology Co., Ltd.
72: ZHU, Fulin, XIE, Shansui, QIAN, Lihong, XIAO, Liang, JIANG, Jieying
33: CN 31: 202220968536.2 32: 2022-04-25

54: SINTERING TOOL FOR THIN-WALL CERAMIC TUBES

00: -

The present invention provides a sintering tool for thin-wall ceramic tubes. The sintering tool includes a plurality of stacked load bearing plates, where U-

shaped grooves are provided in top faces of the load bearing plates at intervals, limiting strips are arranged on bottom faces of the load bearing plates, semicircular recesses are provided in the limiting strips, the limiting strips are inserted into the U-shaped grooves in the adjacent load bearing plates, and the semicircular recesses and the groove bottoms of the U-shaped grooves form cylindrical containing cavities used for containing ceramic tubes in an enclosing manner. The sintering tool for thin-wall ceramic tubes provided by the present invention is simple in structure, can increase a loading capacity of a furnace cavity and reduce the production cost, and can produce sintered ceramic tubes with uniform wall thicknesses and good quality.

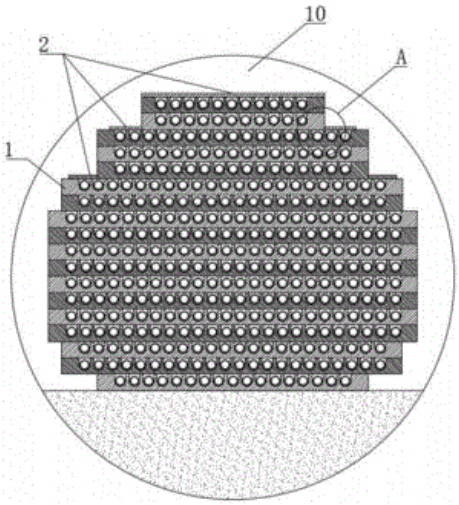

21: 2023/00695. 22: 2023/01/17. 43: 2023/04/25
51: B01D; B01J; C08G
71: Zhaoqing University
72: MA, Deyun
33: CN 31: 202210881615.4 32: 2022-07-26

54: METAL ORGANIC FRAMEWORK FOR ADSORBING FORMALDEHYDE, AND PREPARATION METHOD AND APPLICATION THEREOF

00: -

The present invention provides a metal organic framework for adsorbing formaldehyde, which contains [Ni2(COOH)8N8] tetranuclear cluster secondary building blocks. The [Ni2(COO)8N8] tetranuclear cluster secondary building blocks are connected to form a three-dimensional porous structure based on a connection mode of IMBM and mbpc 2- anions, three-dimensional pores present in the metal organic framework can fully accommodate formaldehyde molecules, methyl groups and phenyl groups on the surface of the three-dimensional porous structure have relatively high affinity for formaldehyde, and thus the metal organic framework has an efficient formaldehyde adsorption capacity. A composite PBT material prepared by fusing the metal organic framework with a PBT material not only retains the original mechanical properties of the PBT material, but also has an active efficient formaldehyde adsorption capacity.

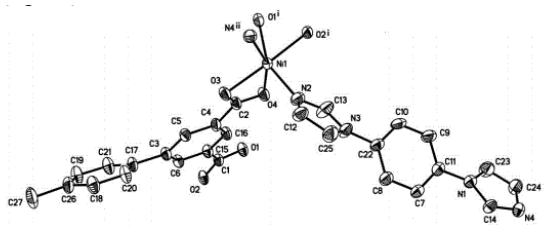

21: 2023/00696. 22: 2023/01/17. 43: 2023/04/25
51: E21C
71: China University of Mining and Technology, Shaanxi Yulin Energy Group Yushen Coal Power Co., Ltd., Liupanshui Normal University
72: SUN, Qiang, BAI, Ruhong, FAN, Limin, ZHENG, Jing, LI, Tao, MA, Liqiang, WAN, Xiaobo, ZHANG, Jiaqi
33: CN 31: 202211506344.0 32: 2022-11-28

54: SYNERGETIC MINING METHOD FOR CLOSE-DISTANCE COAL SEAM AND OVERLYING SECTION COAL PILLAR

00: -

Disclosed is a synergetic mining method for a close-distance coal seam and an overlying section coal pillar, including the following steps: excavating a haulage roadway and a ventilation roadway at a close-distance coal seam below a section coal pillar, making an open-off cut, and arranging a fully-mechanized caving hydraulic support and a fully-mechanized mining hydraulic support simultaneously in the open-off cut for comprehensive mechanized coal mining; allowing the fully-mechanized mining section and the fully-mechanized caving section to cooperate with each other to realize synergetic mining of the close-distance coal seam and the overlying section coal pillar. According to the method of the present invention, full play is given to the dual technical advantages of fully-mechanized mining and fully-mechanized caving, and coal-pillar-free full

mining of coal resources can be realized. With strong technology innovation and convenient operation, the method has high economy and practicability, and broad application prospects.

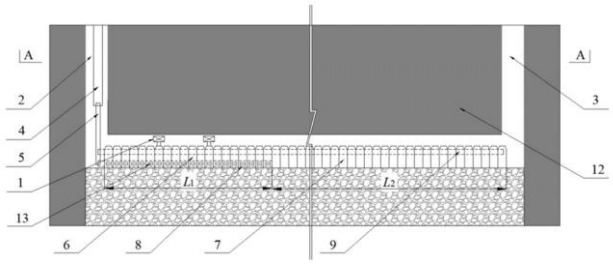

21: 2023/00756. 22: 2023/01/17. 43: 2023/04/25
51: H05K
71: Zhengzhou University of Aeronautics
72: REN, Yumei, FENG, Desheng, ZHANG, Zixuan, YAN, Zhiming, QIN, Zhen, LI, Peichen

54: BIT 1T/2H-MOS2/NI CHAIN/RGO AEROGEL COMPOSITE WAVE-ABSORBING MATERIAL AND PREPARATION METHOD THEREOF

00: -

The present invention discloses a 1T/2H-MoS2/Ni chain/rGO aerogel composite wave-absorbing material and a preparation method, belonging to the technical field of nanomaterial preparation; the preparation method includes the following steps: dispersing a nickel salt precursor in an ethylene glycol solution, then adding sodium hydroxide and hydrazine hydrate to the above solution in sequence, and carrying out a reaction under the condition of solvent heat field and magnetic field induction to prepare and obtain the magnetic metal Ni chain; adding the magnetic metal Ni chains to a precursor solution of a molybdenum source and a sulfur source in a mass ratio, adding a reducing agent, and carrying out a reaction under a solvothermal condition to prepare and obtain the 1T/2H-MoS2/Ni chain composite; mixing the 1T/2H-MoS2/Ni chain composite with a graphene oxide solution in a mass ratio, and carrying out a reaction under a hydrothermal condition to finally prepare and obtain a 1T/2H-MoS2/Ni chain/rGO aerogel composite wave-absorbing material. In the preparation method of the present invention, the Ni chain is used as a carrier to grow MoS2 nanosheets in situm, which is introduced to enhance the magnetic loss of the system, improve the attenuation ability of the system, and promote the electromagnetic wave absorption ability to be significantly improved.

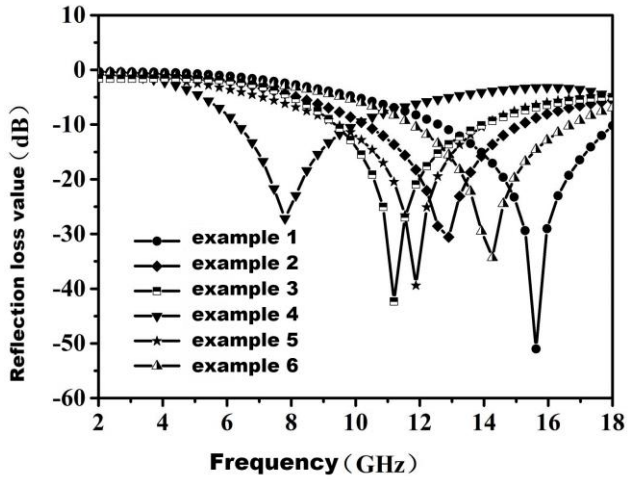

21: 2023/00798. 22: 2023/01/18. 43: 2023/04/25
51: E02D
71: Guangzhou University, Henan Capital Construction Science Experiment Institute Co., Ltd, Huanghuai University, Shenzhen Jisuan Technology Co., Ltd, Guangzhou Building Science Institute Group Co. Ltd
72: Zhang Jichao, Chen Rongbao, Piao Zhandong, Yang Delei, Yu Zhiwei, Bao Wei, Xu Yong, Li Chuanmin, Qiao Shengfang, Zhang Chao, Wang Yahui

54: CALIBRATION DEVICE FOR THE DATA COLLECTION AND DETECTION EQUIPMENT OF THE PIPE PILE BEARING CAPACITY DATABASE

00: -

The application relates a calibration device for the data collection and detection equipment of the pipe pile bearing capacity database, which comprises a test pile penetrating on a foundation platform, a supporting bracket installed on the foundation platform and sleeved outside the test pile, a heavy hammer driven by a hanging hammer device and used for striking the test pile, and two groups of annunciators installed on the side of the supporting bracket and the inductors for sensing signals sent by the annunciators; Buzzers electrically connected with the inductors are installed on the inductors, two groups of the annunciators and the inductors are located on two adjacent sides of the supporting bracket, and the number of one group of annunciators and inductors is set to two, and a preset distance is set between the vertical plane where the signal lines of two groups of annunciators are located and the center line of the test pile. The application has the characteristics of reducing the error between the center line of the supporting

bracket and the center line of the test pile when doing the bearing capacity test of the pipe pile, so as to achieve the effect of improving the quality of heavy hammer striking to improve the data quality in the database.

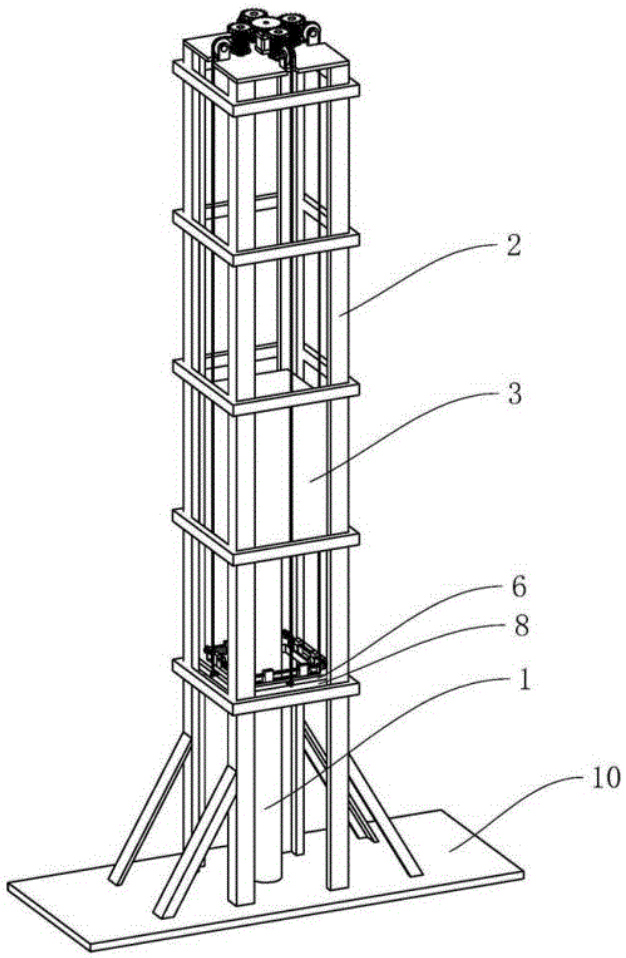

21: 2023/00843. 22: 2023/01/18. 43: 2023/04/25
51: B60K; G01C; B60W
71: "OMNICOMM ONLINE" LIMITED LIABILITY COMPANY
72: PANKOV, Boris Valerevich
33: RU 31: 2021114621 32: 2021-05-24
54: SYSTEM FOR GENERATING AN ENERGY-EFFICIENT TRACK VEHICLE IN MOTION
00: -
The proposed invention relates to methods for controlling energy consumption by a motor vehicle, and can be used in transportation industry. The technical problem to be solved by the claimed invention is to provide a system that do not possess the drawbacks of the prior art and thus make it possible to generate an accurate energy-efficient track for a motor vehicle that allows to reduce energy consumption by the motor vehicle moving along a highway, including as part of a convoy.

21: 2023/00845. 22: 2023/01/18. 43: 2023/04/25
51: G01C; B60W
71: "OMNICOMM ONLINE" LIMITED LIABILITY COMPANY
72: PANKOV, Boris Valerevich
33: RU 31: 2021114622 32: 2021-05-24
54: MOTOR VEHICLE WITH A COMPUTER DEVICE
00: -
The proposed invention relates to methods for controlling energy consumption by a motor vehicle, and can be used in transportation industry. The technical problem to be solved by the claimed invention is to provide a motor vehicle that do not possess the drawbacks of the prior art and thus make it possible to generate an accurate energy-efficient track for a motor vehicle that allows to reduce energy consumption by the motor vehicle moving along a highway, including as part of a convoy.

21: 2023/00846. 22: 2023/01/18. 43: 2023/04/25
51: G01C; B60W
71: "OMNICOMM ONLINE" LIMITED LIABILITY COMPANY
72: PANKOV, Boris Valerevich
33: RU 31: 2021115767 32: 2021-06-01
54: GENERATING AN ADJUSTMENT ENERGY-EFFICIENT TRACK FOR A VEHICLE
00: -
The proposed invention relates to methods for controlling energy consumption by a motor vehicle, and can be used in transportation industry. Technical problem to be solved by the claimed invention is to provide a method, a device, a system, a motor vehicle, and a computer-readable medium that do not possess the drawbacks of the prior art and thus make it possible to generate an accurate adjustment energy-efficient track for a motor vehicle that allows to reduce energy consumption by the motor vehicle on the specific portion of the route, as well as to return the vehicle in operation, after an emergency and/or unexpected stop, back to moving in accordance with the main energy-efficient track.

21: 2023/00847. 22: 2023/01/18. 43: 2023/04/25
51: G01C; G06F; B60W
71: "OMNICOMM ONLINE" LIMITED LIABILITY COMPANY
72: PANKOV, Boris Valerevich
33: RU 31: 2021113775 32: 2021-05-14
54: METHOD FOR GENERATING A GRAPHICAL USER INTERFACE AND A NON-TRANSITORY COMPUTER-READABLE MEDIUM
00: -
The proposed invention relates to methods for controlling energy consumption by a motor vehicle, and can be used in transportation industry. The technical problem to be solved by the claimed invention is to provide a method and a non-transitory computer-readable medium that do not possess the drawbacks of the prior art and thus make it possible to generate an accurate energy-efficient track for a motor vehicle that allows to reduce energy consumption by the motor vehicle on the specific portion of the route, as well as to reliably signal about energy consumption by the motor vehicle and the ways of reducing its energy consumption.

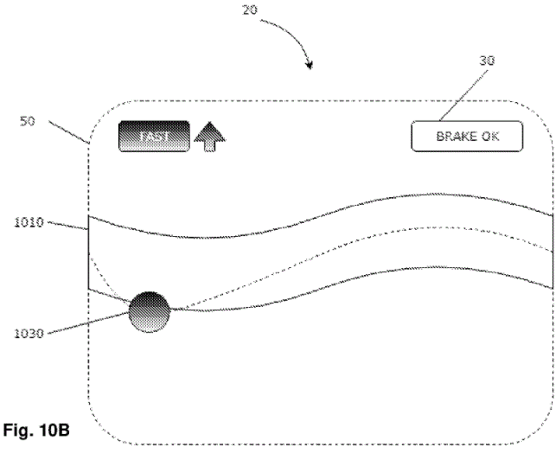

Fig. 10B

21: 2023/00848. 22: 2023/01/18. 43: 2023/04/25
51: G01C; G06F; B60W
71: "OMNICOMM ONLINE" LIMITED LIABILITY COMPANY
72: PANKOV, Boris Valerevich
33: RU 31: 2021113776 32: 2021-05-14
54: DEVICE FOR GENERATING A GRAPHICAL USER INTERFACE AND A SYSTEM FOR GENERATING A GRAPHICAL USER INTERFACE
00: -
The proposed invention relates to methods for controlling energy consumption by a motor vehicle, and can be used in transportation industry. The technical problem to be solved by the claimed invention is to provide a device and a system that do not possess the drawbacks of the prior art and thus make it possible to generate an accurate energy-efficient track for a motor vehicle that allows to reduce energy consumption by the motor vehicle on the specific portion of the route, as well as to reliably signal about energy consumption by the motor vehicle and the ways of reducing its energy consumption.

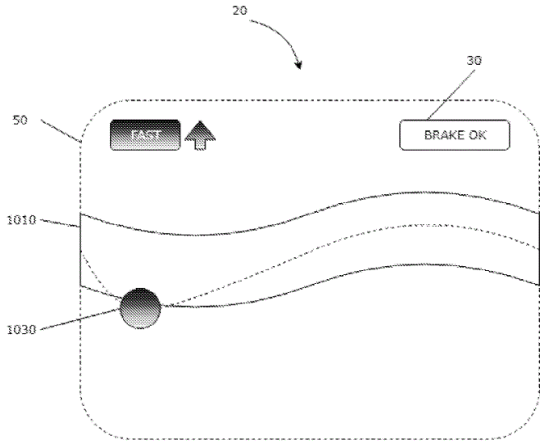

21: 2023/00855. 22: 2023/01/19. 43: 2023/03/07
51: B62B; C04B; G06Q; H02S
71: LOVELY PROFESSIONAL UNIVERSITY
72: Piyush Kumar Harichandan, Dr. Tarlochan Singh, Mandeep Singh
33: IN 31: 202211031833 32: 2022-06-03
54: A SMART WORK STATION WITH DETACHABLE FOLDING AND UNFOLDING
00: -
The present invention relates to novel a table top with wire organizer (102) having an adjustable back (105) and button (104) for moving up and down with plurality of compartments (101) for keeping accessories; telescopic legs for height adjustment and folding with bottle holder (103) and the back has a led light system (107) and button system with solar battery (106). The works station is especially designed and made for recycled materials. The said invention serves dual purpose as solves the problem of space as well as solid waste generation. The said work station is cost effective and due to effective use of solar energy is useful for indoor and outdoor functioning. The said invention is suitable for homes, offices, schools or even shops where computers are being used.

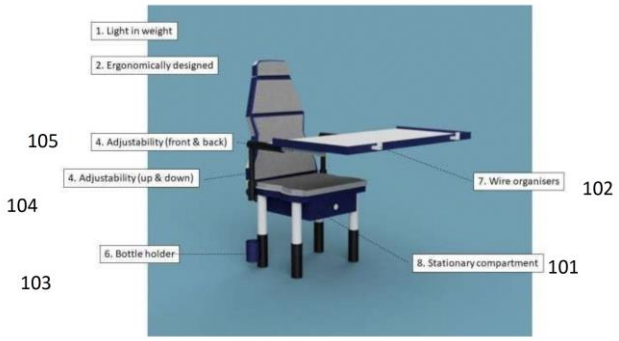

21: 2023/00882. 22: 2023/01/20. 43: 2023/03/07
51: A47G; B01D; D06F
71: LOVELY PROFESSIONAL UNIVERSITY
72: Saneen Swalih, Dr. Tarlochan Singh, Mandeep Singh
33: IN 31: 202211029895 32: 2022-05-25
54: A MULTIFUNCTION CLOTH DRYING AND SANITIZING CLOSET
00: -
The present invention relates to novel multifunctional drying and sanitizing closet which has a drying chamber with rotating plurality of hangers for hanging clothes (101), the top chamber (102) is the drying chamber with plurality of rods and base has water collection unit (103). The closet is cost effective and made from recycled plastic. The closet is very effective as it solves dual purpose of drying as well as sanitization. The time of sanitization is fixed and closet cannot be opened till sanitization is done. The closet is designed to solve the purpose of space and air conditions in small areas.

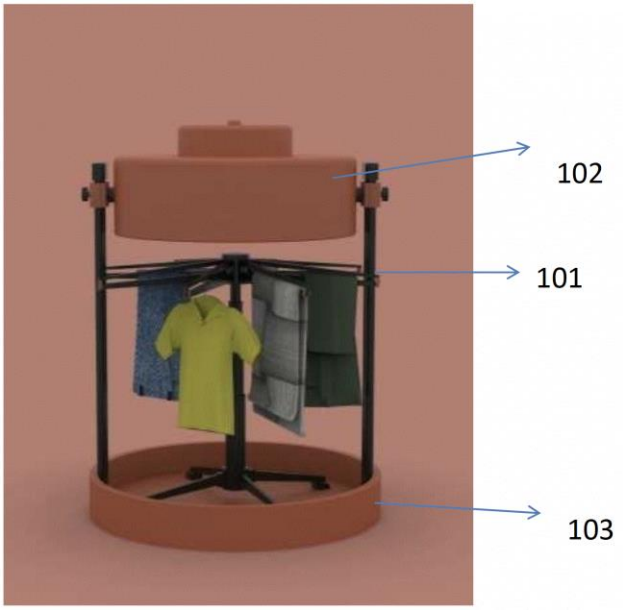

21: 2023/00883. 22: 2023/01/20. 43: 2023/03/07
51: A21D; A23L
71: LOVELY PROFESSIONAL UNIVERSITY
72: Koul, Bhupendra, Pareek, Pragati, Kaushik, Aditi
33: IN 31: 202211032677 32: 2022-06-08
54: A NOVEL FORTIFIED FOOD PRODUCT FOR DIABETIC PATIENTS AND PROCESS THEREOF
00: -
The present invention discloses the novel formulation for the diabetic patients. This formulation is about the flour with high protein, fiber and low carbohydrates; fortified with unique ingredients; designed especially for diabetics. This flour shall keep the bowels clean and help in weight management. The ingredients present in this flour are different from any other flour meant for diabetics, available in the market. It is affordable and beneficial for all age groups.

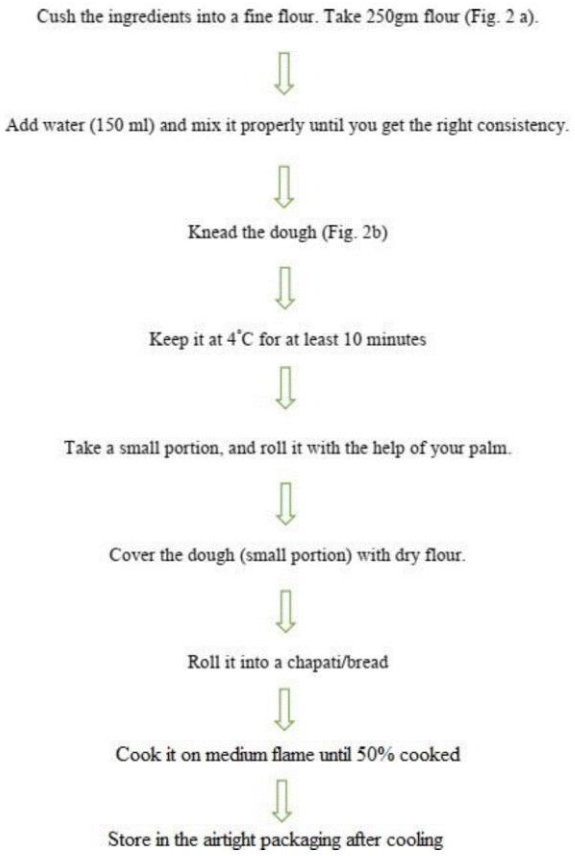

21: 2023/00884. 22: 2023/01/20. 43: 2023/03/07
51: C04B; E01D; E04B; E04C
71: LOVELY PROFESSIONAL UNIVERSITY
72: Pushpendra Kumar Sharma, Anshul Garg, Nagendra Narayan Sharma
33: IN 31: 202211024083 32: 2022-04-25

54: A NOVEL METHOD OF HIGH STRENGTH REINFORCED CEMENT CONCRETING

00: -

The present invention relates to a novel kind of sustainable reinforcing technology in RCC continuous slabs/deck slabs of bridges for both the situ and pre-cast cases. The present invention consists of wavy mild steel bars (1) which are employed as the main reinforcement and straight MS bars as the linear reinforcement (2) and (3) along the troughs and crests. In the present invention, while concreting, a minimum top (4) and bottom (5) covers of concrete are provided to protect the deterioration of steel as well as concrete. The present invention enables high bonding between steel and concrete capable of resisting sagging and hogging in continuous slabs or decks in bridge.

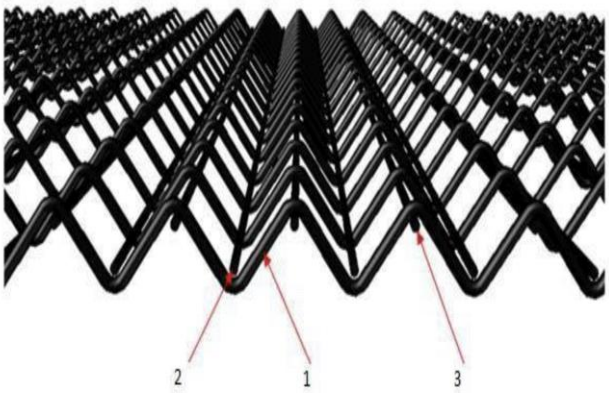

21: 2023/00885. 22: 2023/01/20. 43: 2023/03/07
51: G08B; H04M; G06Q
71: LOVELY PROFESSIONAL UNIVERSITY
72: YASIR AFAQ, AJAY KUMAR BANSAL, BHANU SHARMA, AMAN GANESH, ATUL KHOSLA
33: IN 31: 202211033036 32: 2022-06-09

54: SMART LIBRARY MANAGEMENT SYSTEM FOR EASY TRACKING

00: -

The present invention is related to a smart library management system which assist the user to locate the selected book with QR codes opted from the customized mobile app (101) from the GPS tagged book cabinet (110) with the display screen (111) showing the user ID for easy and fast tracking. The system comprises of a hosting module (102), a shelf management module (103), a self check in/out module and a customized mobile app (101). The invention helps in forming the closed group through the customized mobile app (101) for resource sharing in case of scarce availability of the book.

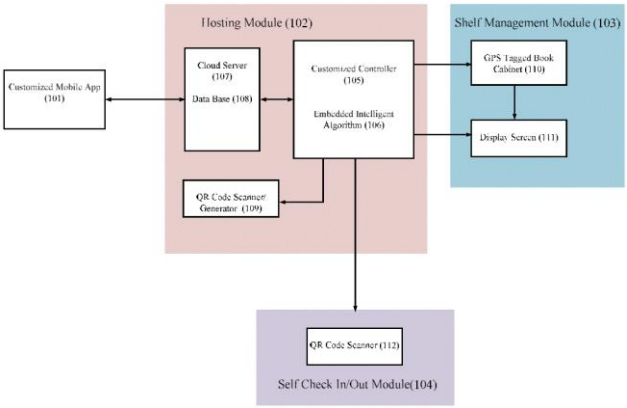

21: 2023/00886. 22: 2023/01/20. 43: 2023/03/07
51: G06N

71: LOVELY PROFESSIONAL UNIVERSITY
72: DILEEP KUMAR P Y V N, PRATEEK AGRAWAL, VISHU MADAAN, AMAN GANESH, CHANDRA MOHAN MEHTA
33: IN 31: 202211033034 32: 2022-06-09
54: A SMART PRAKRITI PREDICATION SYSTEM USING ARTIFICIAL INTELLIGENCE
00: -
The present invention is related to a smart system for predicting the Prakriti dosha of a subject by employing progressive artificial intelligence The system involves all the three methods of visual inspection, pulse analysis and interactive questioning for determining the doshas hence the prakriti of the subject. The system includes a patient information module (101), a computing module (102) with embedded deep learning algorithm (114) and artificial neural network algorithm (115), an acknowledgement module (103) and a doctor's module (104) The system is very cost-efficient and time efficient for accurately predicting the subjects doshas and hence evaluating the subjects prakriti. The system ensures affordable and reliable healthcare for all.

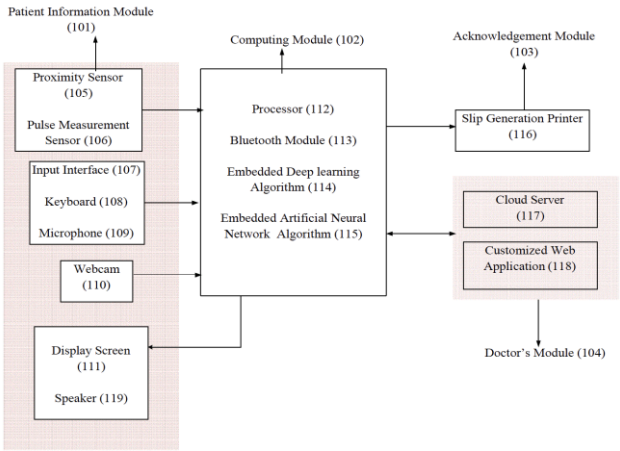

21: 2023/00887. 22: 2023/01/20. 43: 2023/03/07
51: A23L; A61K
71: LOVELY PROFESSIONAL UNIVERSITY
72: RASANE, Prasad, GAVHANE, Ajay, MEHTA, Chandra Mohan, KAUR, Sawinder, SINGH, Jyoti, GUNJAL, Mahendra, VYAS, Pallavi, KAUR, Jaspreet
33: IN 31: 202211041146 32: 2022-07-19
54: A NOVEL BEE POLLEN INCORPORATED FRUIT BASED FUNCTIONAL SPREAD AND PROCESS THEREOF
00: -
The present invention describes the novel bee pollen incorporated fruit based functional spread and process thereof. The novel bee pollen incorporated fruit based functional spread comprises of: fruit pulp; bee pollen; sweetening agent; and preservatives alone or in combination thereof. In the preparation of said bee pollen incorporated fruit based functional spread, fruit pulps are chosen from Guava (Psidium guajava), Pine apple (Ananas comosus) and Mango (Mangifera indica), sweetening agents are chosen from sugar, honey and stevia (Stevia rebaudiana) and preservatives are chosen from citric acid, propionic acid and sorbic acid. This composition can be consumed by people of all ages and can also be consumed by diabetic people. As it is a ready to eat product so it is convenient for consumers.

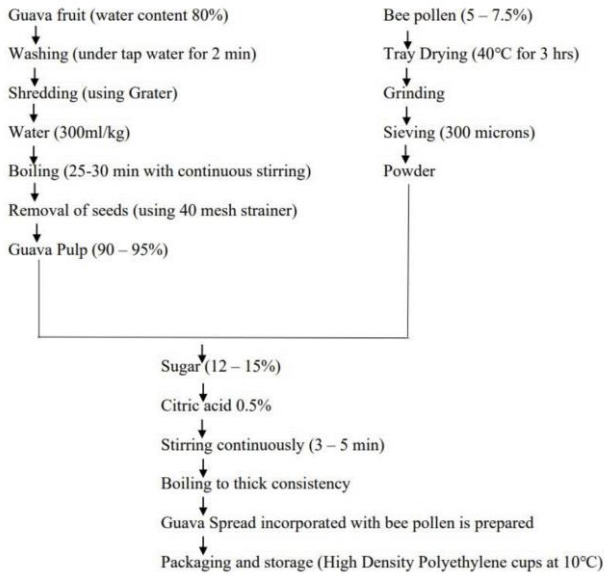

21: 2023/00888. 22: 2023/01/20. 43: 2023/03/07
51: A42B; B64F; H04L
71: LOVELY PROFESSIONAL UNIVERSITY
72: Atul Singla, Tara Singla, Vijay Mishra
33: IN 31: 202211040601 32: 2022-07-15
54: AN IOT ENABLED VERTICAL GARDEN ASSEMBLY
00: -
The present invention relates to an IOT enabled vertical garden assembly which provides clean environment and sustainable surroundings to the microenvironment. The present invention comprises of an arrangement of the typical terracotta blocks with hydrogel, a sensor module mainly moisture and nutrient sensors, an alarm system, a controller unit

and integration with automated grid system, a mobile application integrated with controller. In the present invention, automated grid system installed behind the terra blocks arrangement dispenses moisture and supplements as per the activation of alarm system as per data received from the sensor module. The present invention is environmental friendly and is integrated with the mobile application.

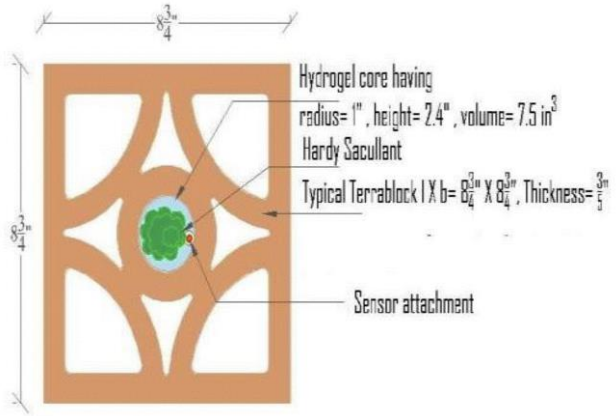

21: 2023/00889. 22: 2023/01/20. 43: 2023/03/07
51: A23K; A61K; C12N; D06L
71: LOVELY PROFESSIONAL UNIVERSITY
72: Koul, Bhupendra, Agrawal, Dhruv, Sharma, Komal
33: IN 31: 202211035692 32: 2022-06-22

54: A NOVEL METHOD FOR DEVELOPING CIS-GENIC HOLY BASIL (OCIMUM TENUIFLORUML.) WITH ENHANCED COLD TOLERANCE

00: -

The present invention discloses a novel method for developing cis-genic holy basil (Ocimum tenuiflorumL.) with enhanced cold tolerance. The method consisting of different steps of: sterilization of seeds of Ocimum kilimandscharicum; In silico analysis and construct design; the constructed plasmids transformed into Agrobacterium tumefaciens strain LBA4404; Agrobacterium tumefaciens- mediated leaf-disc transformation of Ocimum tenuiflorumL. followed by molecular characterization of transgenic plants; separation of T-DNA region for Agrobacterium-mediated transformation; Agrobacterium-mediated transformation of Tulsi using vegetative leaf-disc explant. The development of lodging-resistant tulsi is done and this leads to availability of the tulsi for leaves and its essential oil for food and healthcare industries. The process leads to the development of cis-genic tulsi with enhanced tolerance to cold stress.

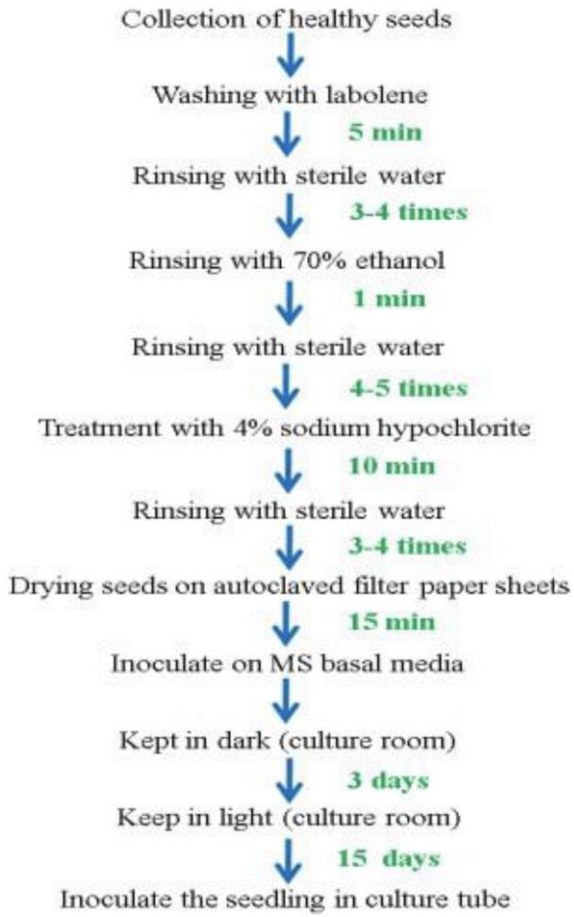

21: 2023/00890. 22: 2023/01/20. 43: 2023/03/07
51: A01G; E03B; E04D; H01L
71: LOVELY PROFESSIONAL UNIVERSITY
72: Atul Singla, Tara Singla
33: IN 31: 202211041145 32: 2022-07-19

54: A NOVEL SYSTEM FOR CLEANING SOLAR PANNEL WITH WATER HARVESTING

00: -

The present invention relates to a solar panel arrangement system with gutter system for promoting rain water harvesting and conserving water. The present invention comprises of a hydro conserve profile, a hydro harvest profile with detachable gutter system in semi-circular or rhombus shape and an adjustable clipped aluminum profile attached to the end of the solar panel. In the present invention, the aluminium profile is designed to collect and dispose of all the water in the rainwater harvesting tank by introducing an end

gutter in case of hydro conserve profile. Here, in case of the hydro harvest profile, the aluminium profile is designed to trickle spray or rain spray on plants kept in either fixed planters on the terrace. The present invention is focused on water harvesting and sustainable development. The present invention is environmental friendly.

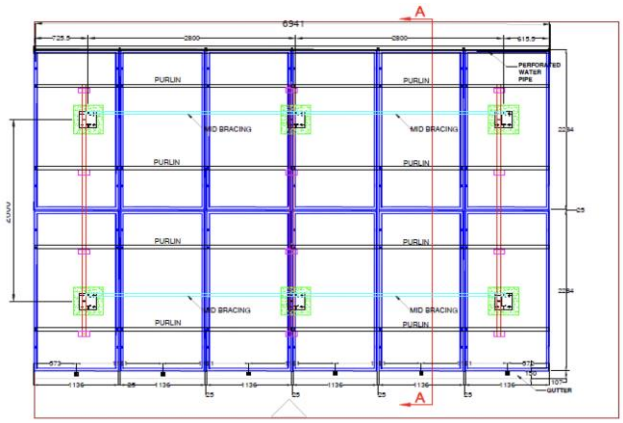

21: 2023/00910. 22: 2023/01/20. 43: 2023/03/07
51: H05K
71: Lu 'an Yong Zhen Jiang Dao Electromechanical Technology Co., LTD
72: Haiyan LU

54: EASY TO CONNECT FIXED PLASMA POWER SUPPLY

00: -

The invention relates to the technical field of electric welding instruments, in particular to a plasma power supply which is easy to fix wiring, including a plasma power supply body and a power line installed at the bottom of its front end, a positive electrode interface and a negative electrode interface, which are respectively connected with an electric welding clamp and a ground wire. A wire is wound inside the back end of the electric welding clamp, and the external wire is fixed with a fixed sleeve. The rear end of the plasma power supply body is provided with a rubber wheel for its rolling; The invention can pull the wire by the welder standing at a height, transfer the force to the fixed sleeve and grip, so that the end of the plasma power supply body is lifted, and then pull the wire horizontally to make the rubber wheel of the plasma power supply body roll on the ground and shift, without the welder running up and down to move the plasma power supply body, so that the welding joint is continuous.

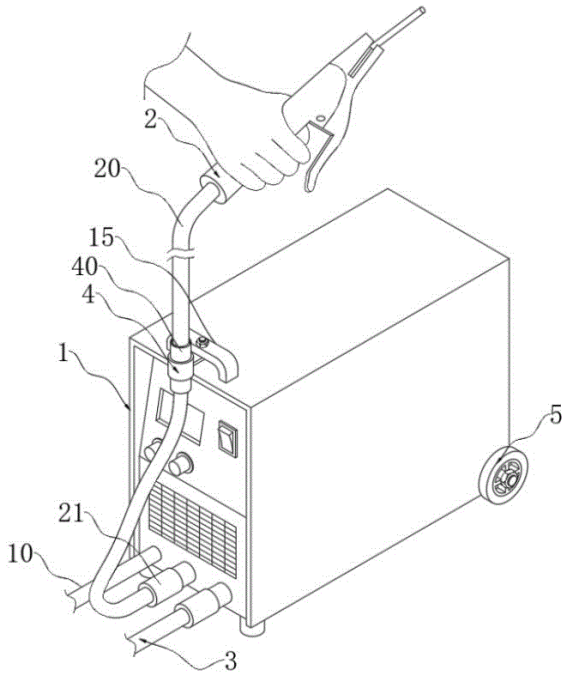

21: 2023/00938. 22: 2023/01/23. 43: 2023/04/25
51: H05H
71: Lu 'an Yong Zhen Jiang Dao Electromechanical Technology Co., LTD
72: HaiYan Lu

54: EASY TO DISASSEMBLE AND CHECK THE PLASMA POWER CABINET

00: -

The invention relates to the technical field of a plasma power supply cabinet, in particular, to a plasma power supply cabinet which is easy to disassemble and check, including a base, a clamping slot is arranged near the back backplane, a middle column is symmetrically arranged in the middle of the base, a top plate is arranged on the middle column, the mounting plate passes through the slot and is fitted with the clamping slot, and a side slide plate is arranged between the fixed plates on the same side; The plasma power cabinet is convenient for disassembly and inspection, and the middle column is used with the back plate, which is convenient to connect the base and the top plate, so that the whole frame forms a hollow frame structure, the chute on the fixed plate is matched with the side slide, which is easy to disassemble and install, convenient for the user to disassemble and inspection the interior, and does not need to disassemble all the components, convenient to operate and save time and effort.

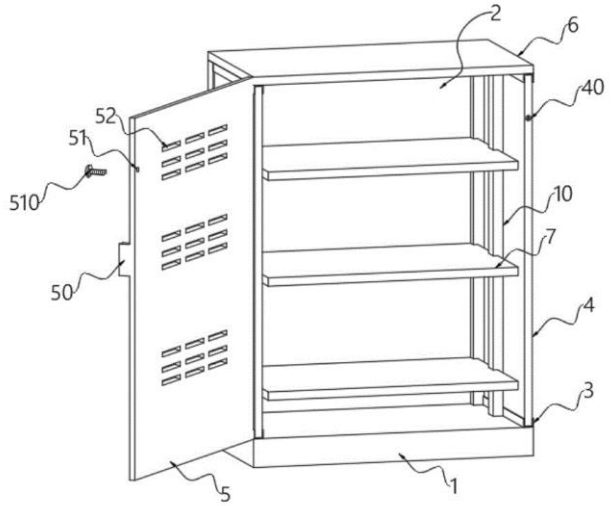

21: 2023/00939. 22: 2023/01/23. 43: 2023/03/07
51: H05K
71: Lu 'an Yong Zhen Jiang Dao Electromechanical Technology Co., LTD
72: HaiYan Lu

54: PLASMA POWER SUPPLY WITH SURFACE COOLING STRUCTURE

00: -

The invention relates to the technical field of plasma power supply, in particular, to a plasma power supply box with a surface cooling structure, including a plasma power supply box, a sliding door is arranged in the chute, a hollow area between the inner wall and the outer wall of the plasma power supply box is an air flow layer, a ventilation groove is arranged on the right end face of the plasma power supply box, the plasma power supply box is provided with a sliding door to facilitate the installation of the main body of the internal plasma power supply. The airflow layer is set up to facilitate the heat on the surface of the plasma power supply box through the fan to accelerate the flow of air, take away some heat, ventilation groove and plasma power supply box internal communication tube, to avoid the communication tube with the airflow layer, to prevent the air flow affecting the airflow layer, heat dissipation hole and the airflow layer communication tube, to accelerate the flow of the internal airflow.

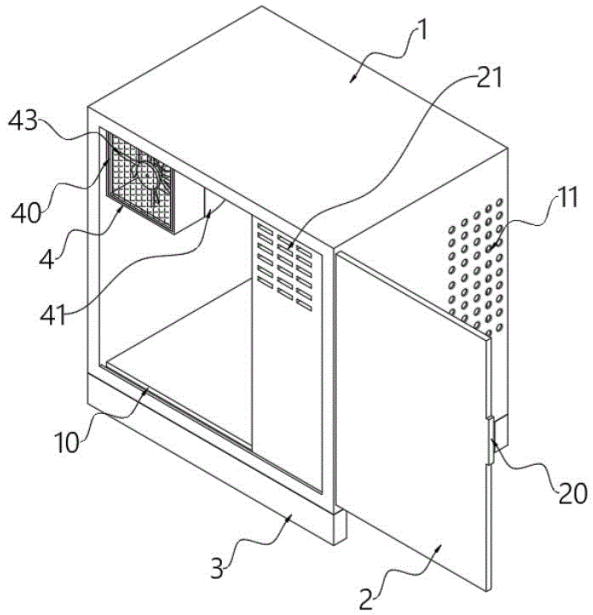

21: 2023/00940. 22: 2023/01/23. 43: 2023/03/07
51: H05K
71: Lu 'an Yong Zhen Jiang Dao Electromechanical Technology Co., LTD
72: HaiYan Lu

54: PLASMA POWER SUPPLY WITH AUXILIARY MOUNTING STRUCTURE

00: -

The invention relates to the technical field of plasma power supply, in particular to a plasma power supply with auxiliary installation structure, including a mounting plate, the top surface center of the mounting plate is tightly welded with a coaxial threaded column, the threaded column is connected with a fixed body, the top surface of the fixed body is connected with a roof through a bearing rotation, the fixed body and the roof are provided with threaded holes. And the thread hole is connected with the thread of the thread column;The top face of the mounting plate is tightly welded with two supports, and the top of the support is tightly welded with ear plate;The plasma power supply with auxiliary installation structure through the installation plate, bracket, fixed plate and U-shaped frame, easy to install the plasma power supply on the ground or wall, on the one hand, it is isolated from the surface, to avoid surface water into the equipment, on the other hand, it is easy to install on the wall, easy to use according to the actual situation.

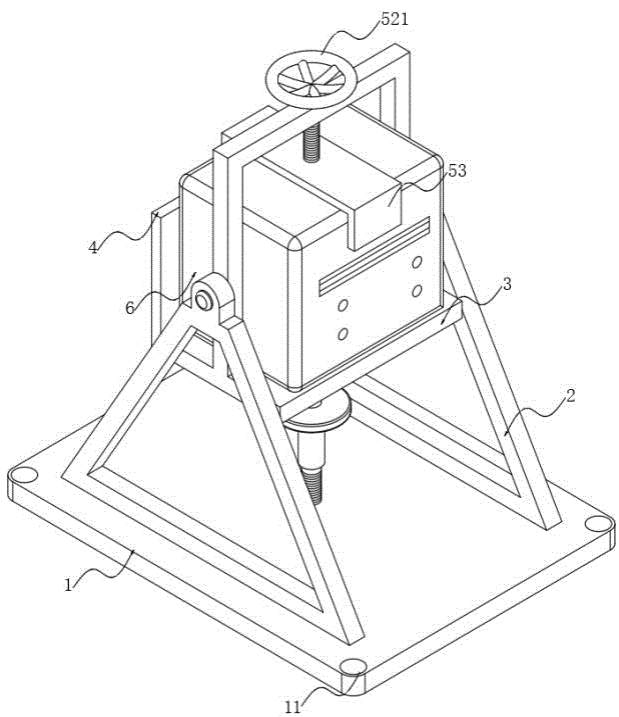

21: 2023/00941. 22: 2023/01/23. 43: 2023/03/09
51: G01R
71: Lu 'an Yong Zhen Jiang Dao Electromechanical Technology Co., LTD
72: HaiYan Lu
54: ANTI-CLIMBING RISK CT POLARITY TEST METHOD
00: -
The invention relates to the technical field of substation maintenance, in particular to the polarity test method of anti-high-risk CT. By touching the display screen, the test method of large current signal is changed and the test method of small current pulse signal is adopted. The current signal generating circuit produces a set of small current pulse signals. P1 end of CT, P2 end, S1 end of C, S2 end will sense a set of small current pulse, the pulse signal induced by S1 end and S2 end will be sent to MCU, there will be a millisecond time difference, through the type of orthogonal coding of the pulse signal induced by S1 end and S2 end input pulse signal into P1 end, when S1 pulse signal fast, it will be judged as polarity. When S1 pulse signal is fast, it can be judged as reverse polarity.The volume and weight of CT polarity test formulated by this method can be greatly reduced, which is convenient for field use and improve work efficiency. The CT polarity tester is small in volume and convenient to carry and use.

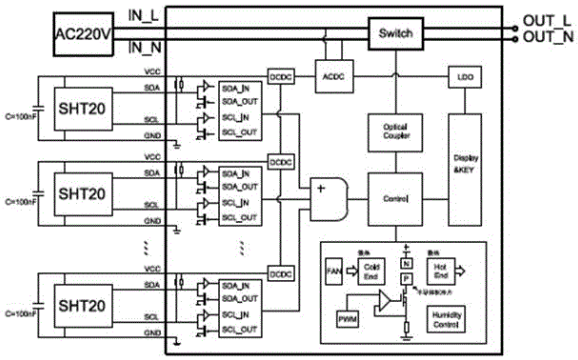

21: 2023/00942. 22: 2023/01/23. 43: 2023/04/25
51: H05K
71: Lu 'an Yong Zhen Jiang Dao Electromechanical Technology Co., LTD
72: HaiYan Lu
54: ANTI-CONTACT LEAKAGE TYPE PLASMA POWER SUPPLY
00: -
The invention relates to the technical field of plasma power supply, specifically to the contact leakage type plasma power supply, including the plasma power supply body, the plasma power supply body is bonded on the inner wall of the insulation board, the plasma power supply body is fixed on the inner wall of the conductive block is fixed by bolts, the bottom wall of the conductive block is fixed by bolts are installed with a plurality of discharge columns. Multiple discharge columns are arranged linearly with equal spacing, the bottom end of the discharge column extends to the bottom of the plasma power supply body, the bottom end of the discharge column shape is inverted cone;Plasma power supply body is provided with a mounting hole on the right side wall, and the inner wall of the installation hole is fixed by bolts installed with a cooling fan, plasma power supply body is provided with a dehumidification device on the left wall, dehumidification device including dehumidification box, dehumidification box top wall near both sides are provided with a convex block, the anti-contact leakage type plasma power supply, with anti-leakage function, good safety performance.

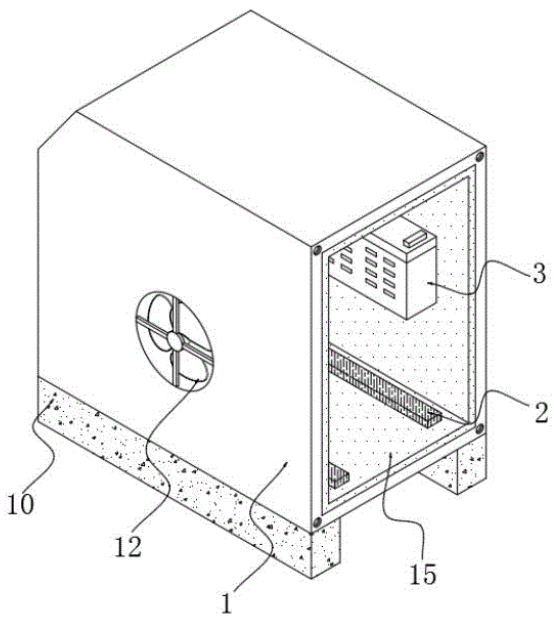

21: 2023/00943. 22: 2023/01/23. 43: 2023/03/09
51: H05K
71: Lu 'an Yong Zhen Jiang Dao Electromechanical Technology Co., LTD
72: HaiYan Lu
54: CIRCULATING COOLING TYPE PLASMA POWER SUPPLY
00: -
The invention relates to the technical field of plasma power supply, in particular, to a circulation-cooled plasma power supply, including a plasma power supply body, the left wall of the plasma power supply body is provided with an air cooling device, the air cooling device comprises a shell, the shell is welded to the plasma power supply body and connected with the plasma power supply body inside, the inner wall of the shell is fixed with a heat dissipation fan through bolts, and the plasma power supply body is provided with a heat dissipation fan. The outer wall of the shell departing from the main body of the plasma power supply is fixed with a second dust screen through a bolt, the right side wall of the main body of the plasma power supply is provided with an access port, and the access port is fixed with an access door through a bolt, the access door departing from the main body of the plasma power supply on one side of the outer wall is provided with a rectangular groove, the inner wall of the rectangular groove is provided with a plurality of ventilation holes, the air cooling, water cooling circulating plasma power supply, Heat dissipation and dust proof effect is good, and it is easy to work stably in the internal electronic devices of the plasma power supply.

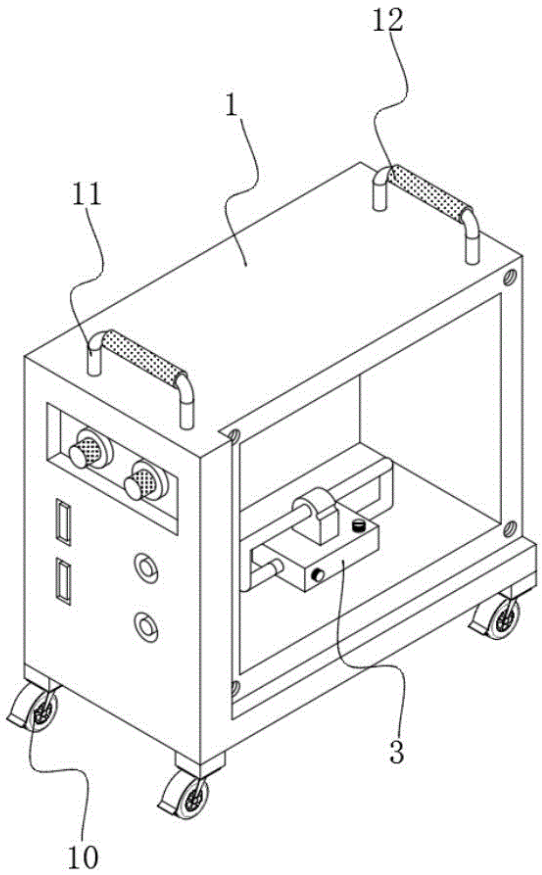

21: 2023/00945. 22: 2023/01/23. 43: 2023/03/09
51: B05D; C01D; H04N
71: LOVELY PROFESSIONAL UNIVERSITY
72: Dr Suman Maji, Pragati Sharma, Prahlad Yadav
54: A NOVEL ECO FRIENDLY METHOD OF MAKING COMPRESSED BOARD FROM AGRIWASTE AND SOLID WASTE
00: -
The present invention is about a novel and environment friendly method to make board from agricultural waste and solid waste. The process is cost effective and industry scalable. The said invention solves the problem of solid waste to a certain level and gives readily usable product out of it. The present invention is ecofriendly as it works with seed impregnation and once used the board can also be used for land reclamation.

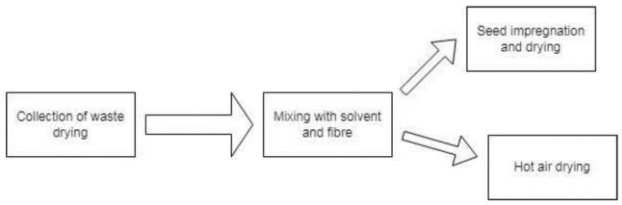

21: 2023/00946. 22: 2023/01/23. 43: 2023/04/25
51: H04W
71: LOVELY PROFESSIONAL UNIVERSITY
72: AKHIL GUPTA, PREKSHA JAIN
33: IN 31: 202211003440 32: 2022-01-21
54: A DEVICE FOR DYNAMIC AND EFFICIENT SPECTRUM UTILIZATION FOR 6G COMMUNICATIONS
00: -
The present invention relates to a device and method for application-specific channel selection scheme for efficient utilization of the spectrum and enhancing the energy efficiency of the 6G heterogeneous network. The device conferring to the application demand of the small cell users of the small cell base station dynamically switches downlink frequency channel between THz, mmWave and RF channels.

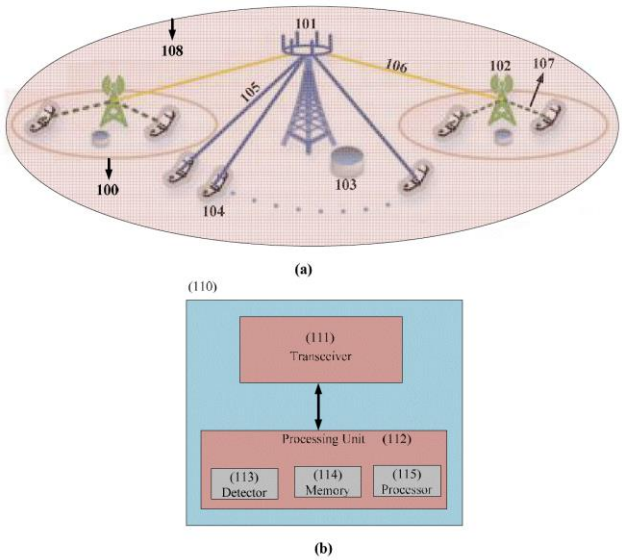

21: 2023/00947. 22: 2023/01/23. 43: 2023/03/09
51: A61B; H01Q
71: LOVELY PROFESSIONAL UNIVERSITY
72: PRAVEEN KUMAR MALIK, NITASHA BISHT
33: IN 31: 202211008391 32: 2022-02-17
54: CIRCULAR PATCH MICROSTRIP ANTENNA FOR MID BAND 5G APPLICATIONS
00: -
The invention discloses a circular radiating patch microstrip antenna that offers a choice for increasing the bandwidth that resonates in multiband frequencies. The microstrip antenna uses a slot loaded circular patch for 5G mobile application. The antenna is designed on low cost FR4 substrate with a thickness of 1.6 mm. Through a lumped port, a microstrip feedline couples electromagnetic energy to the radiator. The antenna is fabricated on printed circuit board which resonates at 3.35 GHz, 6.68 GHz, 8.84 GHz, 12.62 GHz, 14.06 GHz and 15.68 GHz with bandwidth of 100 MHz, 630 MHz, 540 MHz, 990 MHz and 6390 MHz respectively. .

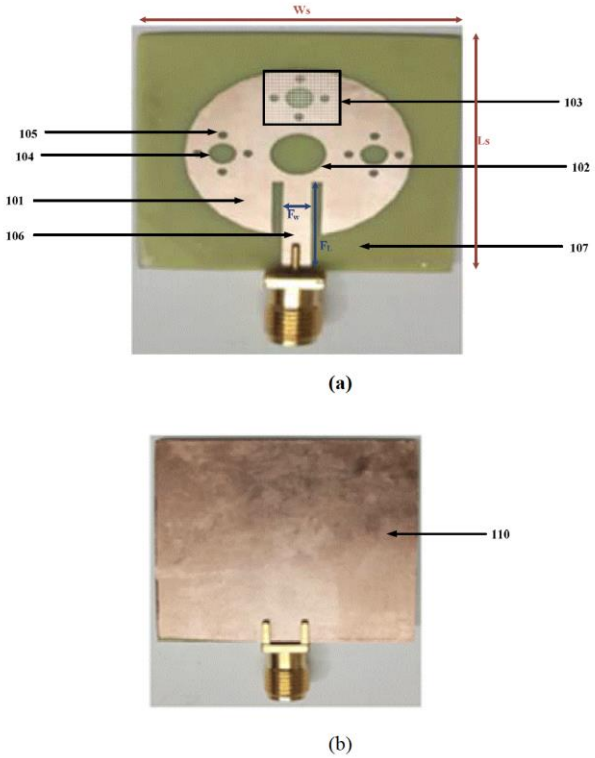

21: 2023/00948. 22: 2023/01/23. 43: 2023/03/09
51: B64C; B64F; G06F
71: LOVELY PROFESSIONAL UNIVERSITY
72: JV MurugaLalJeyan, Amandeep Singh, Amit Kumar Thakur, N.Karthick, S Ganesh
33: IN 31: 202211013218 32: 2022-03-11
54: A NOVEL DESIGN FOR SLANT BACK TAIL GENERTAION AIRCRAFT
00: -
The present invention relates to a novel aircraft design for slant back tail generation. The present invention consists of method of designing the fuselage of the aircraft with clipped delta wing. In the

present invention, a clipped delta wing which is used as vertical stabilizer as well as horizontal stabilizer. Here, the aircraft is aerodynamically designed considering all the relevant aerodynamic characteristic values using CREO and ANSYS softwares. The present invention is capable of providing high lift value and the lesser drag value at every value of angle of attack and provides more stability to the aircraft.

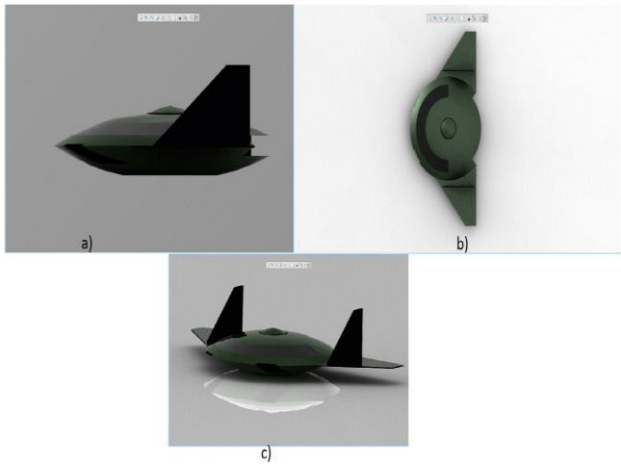

21: 2023/00949. 22: 2023/01/23. 43: 2023/04/25
51: H01Q
71: LOVELY PROFESSIONAL UNIVERSITY
72: RASHMI ROGES, PRAVEEN KUMAR MALIK, SANDEEP SHARMA
33: IN 31: 202211021069 32: 2022-04-07

54: A COMPACT CPW MICROSTRIP PATCH ANTENNA FOR IOT APPLICATION

00: -

The invention discloses a conventional coplanar waveguide (CPW) antenna consisting of a radiating patch (100) consisting of a single conducting track printed onto a FR4 dielectric substrate (109)(109), together with a log periodic antenna (108) and two pair of rectangular patches (103), (104) and (105), (106) on both sides of the microstrip feed line (107) and a ground plane (101). The antenna is compact having a size of 20mm × 20mm × 1.6mm. The antenna exhibits low voltage standing wave ratio of 1.06879 at a resonating frequency of 2.46 GHz and has a high gain of 9.36dB in the narrow bandwidth of 2.43 - 2.5 GHz. The low cost, highly energy efficient, compact size and optimized performance parameters makes the antenna to be widely used in unlicensed communication spectrum particularly to ISM band for IoT applications.

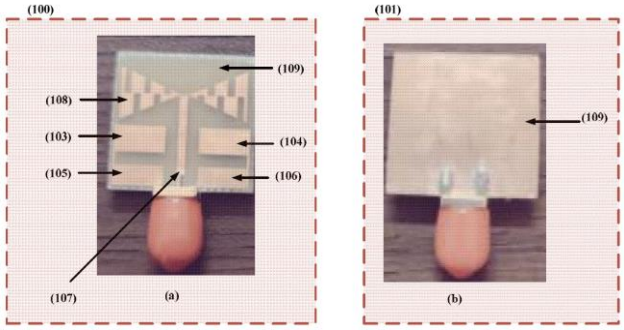

21: 2023/00950. 22: 2023/01/23. 43: 2023/04/25
51: A61B; B64C; F16B
71: LOVELY PROFESSIONAL UNIVERSITY
72: GowkanapallePavan Kumar Reddy, Ashwani Kumar Yadav, Harpinder Singh Sandhu, Gurpreet Singh Phull
33: IN 31: 202211021737 32: 2022-04-12

54: A FLEXIBLE CONNECTING DEVICE FOR TRACTORS

00: -

The present invention relates to a flexible connecting device for tractors to provide support and to reduce impact loading while connecting it with trolley. The present invention consists of a hitch arrangement, a horizontal hitch base (7) arrangement for providing horizontal movement, a vertical hitch base arrangement for providing vertical movement connected with one another using power screw center bolt (PS-Center bolt) (12), power screw handle (14), and power screw holders' bolts (PSH-bolts) (17) and connecting rods (18). The present invention enables the hitch arrangement movement in up and down, as well as and right and left direction as per the requirement.

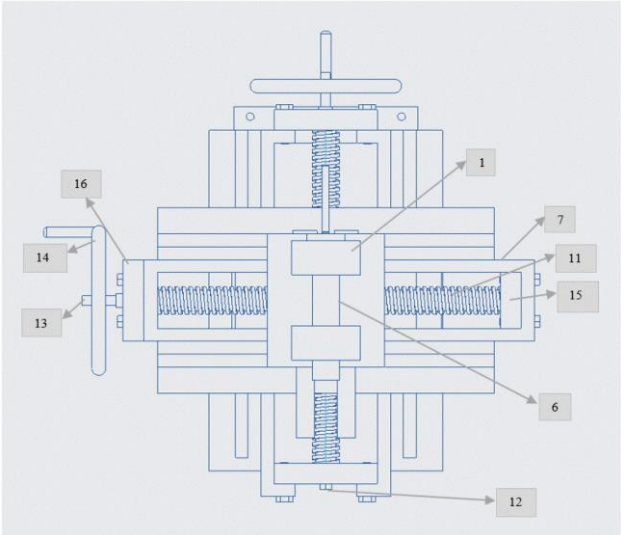

21: 2023/00951. 22: 2023/01/23. 43: 2023/03/09
51: A01G; A01K; G08B
71: LOVELY PROFESSIONAL UNIVERSITY
72: Somesh Negi, Ashish Thakur, Nelluri Shiva Sai, Harjit Singh, Atul Khosla, Chander Prakash, Swastik Pradhan
33: IN 31: 202211027331 32: 2022-05-12
54: A MULTI-FUNCTIONAL WILD BOAR TRAP
00: -
The present invention relates to a novel sustainable system for wild boar/pig trapping. The present invention comprises of the piezoelectric sensor (1), temperature sensor and humidity sensor (6), a solenoid actuator (2), a control unit (3), cage (4), sprinklers (7) and an Arduino GSM Shield, and a SIM card. In the present invention, the control unit (3) actuates the trap by disengaging a locking mechanism of the cage (4) as per signal received by the piezoelectric sensor (1) and activates sprinkler (7) as per instructions received through the temperature sensor and humidity sensor (6). The present invention is cost effective and it not only protects the crops from feral pigs/boars but also protects it from drying and catching fire.

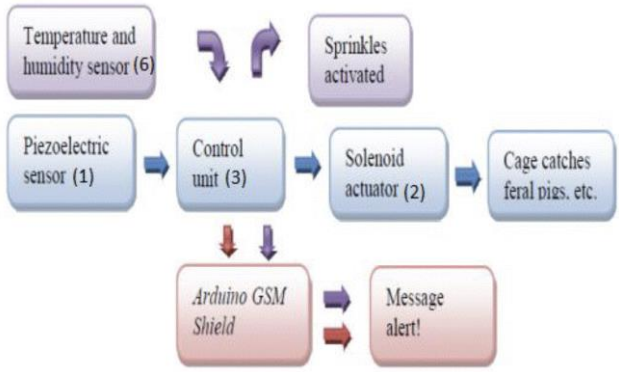

21: 2023/00952. 22: 2023/01/23. 43: 2023/03/09
51: A23B; A23C; A61K; C05F; C12N
71: LOVELY PROFESSIONAL UNIVERSITY
72: Rasane, Prasad, Chopade, Sanket, Mehta, Chandra Mohan, Kaur, Sawinder, Singh, Jyoti, Gunjal, Mahendra, Vyas, Ashish, Avinashe, Harshal
33: IN 31: 202211035103 32: 2022-06-20
54: A NOVEL TERMINALIA ARJUNA BASED SHRIKHAND AND PROCESS THEREOF
00: -
The present invention discloses the novel Terminalia arjuna based shrikhand and its method of preparation. The prepared dairy product is conventional to use. The prepared Terminalia arjuna incorporated shrikhand increase the shelf life of shrikhand as the chemical constituents of the medicinal herb will act as preservative. The prepared dairy product enhancing the nutritional and medicinal properties of shrikhand. The product can be used commercially for the every individual due to its medicinal and nutritional properties.

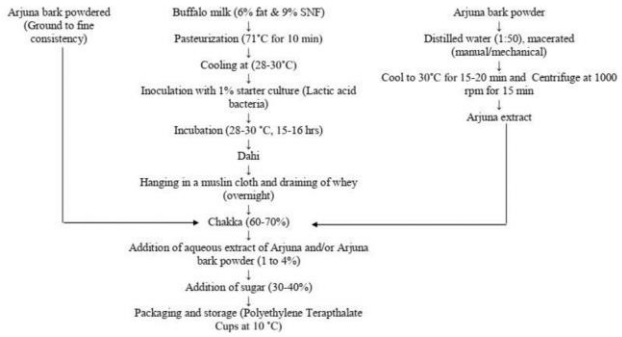

21: 2023/00953. 22: 2023/01/23. 43: 2023/03/09
51: A01H; A23L; C12N; C12R
71: LOVELY PROFESSIONAL UNIVERSITY
72: KOUL, Bhupendra, SHARMA, Komal
54: METHOD FOR DEVELOPING CHICKPEAS WITH ENHANCED OMEGA-3 ALPHA-LINOLENIC ACID CONTENT

00: -
A method for developing chickpeas (200) with enhanced omega-3 Alpha-Linolenic Acid (ALA) content, comprising steps of: isolating an omega-3 FAD3 gene (316) from flax seeds (100); cloning of the isolated omega-3 FAD3 gene (316) into vectors; transforming the cloned vectors into an Agrobacterium tumefaciens strain; inoculating pre-treated chickpeas (200) in B2 growth medium; inoculating a single clone of the Agrobacterium tumefaciens strain into a YEB medium; pelletizing an Agrobacterium culture; suspending the pelletized Agrobacterium culture in a co-cultivation medium; removing epicotyl, hypocotyl, and cotyledon of explant from the chickpeas (200) to prepare a cotyledonary node explant; pre-incubating the cotyledonary node explant in a pre-incubation medium; transferring the cotyledonary node explant transformed using the Agrobacterium tumefaciens strain in various mediums to prepare shoots; transferring the prepared shoots in Root Induction Medium (RIM) for root induction in plantlets; and maintaining the plantlets transformed with the enhanced omega-3 ALA content in glass house.

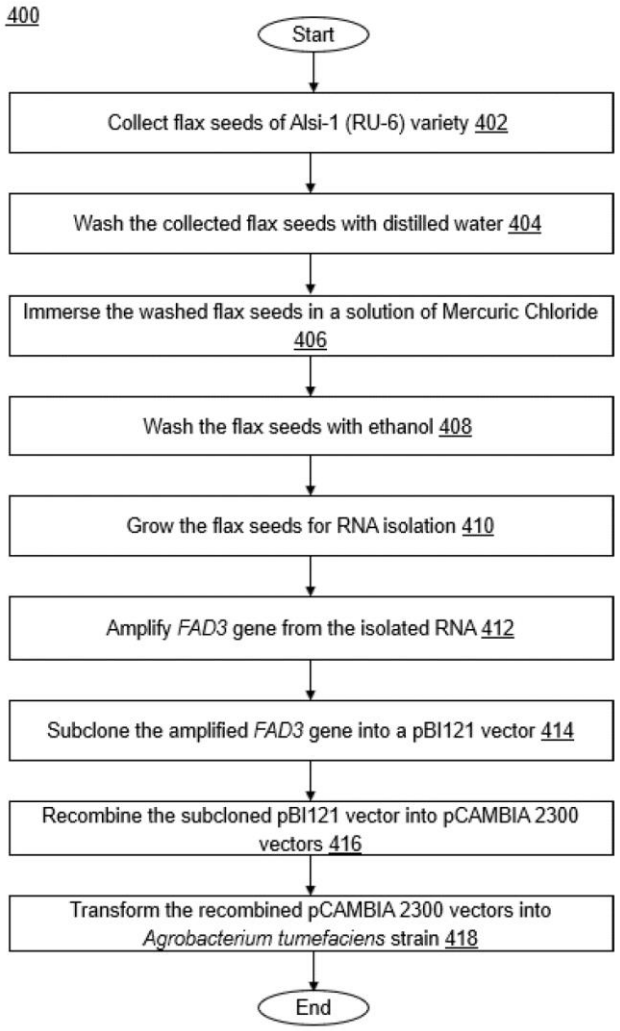

21: 2023/00954. 22: 2023/01/23. 43: 2023/03/09
51: B64C; B64F
71: LOVELY PROFESSIONAL UNIVERSITY
72: Pratik Balasaheb Pansare, Sagar Chawla, Amit Kumar Thakur, Amit Kumar, Vijay Kumar Singh, Mithilesh Kumar Dubey, Bilji C. Mathews, Ujjal Kalita
54: A METHOD OF VERTICAL TAKE OFF AND LANDING FOR NEW GENERATION ELECTRIC AIRCRAFTS
00: -
The present invention relates to a method of enhancing in vertical takeoff and landing of new generation electric aircraft (6). The present invention consists of a landing panel (1), a power source (ground) (2), a landing platform (3), a fuselage mounted magnetic panel (4), power source (5) for aircraft. In the present invention, as the aircraft hovers above the certain distance over the landing platform (1), the repulsion force between the magnet assembled on the outer structure of the aircraft's

lower fuselage surface and other magnets on the surface of the landing platform has maximum intensity and at the time of aircraft's take-off, the power source (5) connected to the landing panel (1) automatically switches on producing the repulsive force with the gradual increase of intensity as per the requirement. Here, the power source (5) is disconnected automatically as the aircraft is controlled and brought back on the surface.

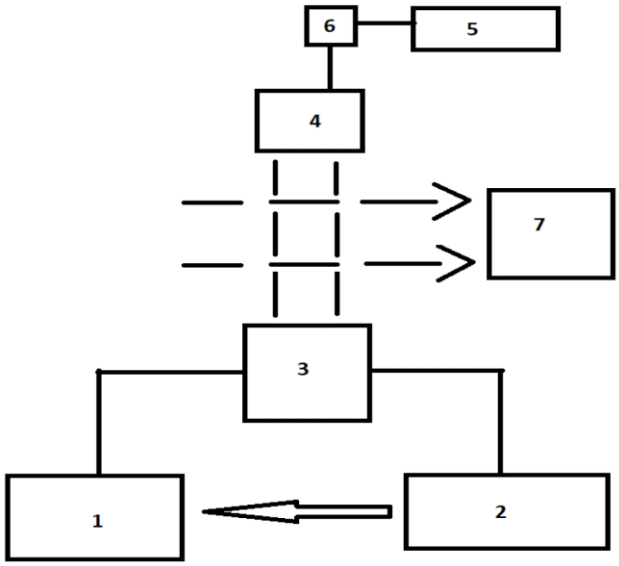

21: 2023/00955. 22: 2023/01/23. 43: 2023/03/09
51: B62D; G08G
71: LOVELY PROFESSIONAL UNIVERSITY
72: Irtiqa Amin, Mithilesh Kumar Dubey, Lovi Raj Gupta, Pooja rana, Amit Kumar Thakur
54: VEHICLE PARKING ASSISTANCE SYSTEM AND METHOD THEREOF
00: -
A vehicle parking assistance system (100), comprising: a motion sensor (102) to detect an incoming vehicle; a scanner (104) to scan a number plate (122) of the incoming vehicle; sensor plates (106a-106n) to sense an availability condition of parking spots; a cloud server database (112) to store information associated with the availability of the parking spots; a processing unit (110) configured to: determine the availability of the parking spot in a first parking premise of the parking premises; allocate one of, an available parking spot in the first parking premise of the parking premises to the vehicle, when at least one of, the parking spots is available in the first parking premise of the parking premises; and determine the availability of the parking spot in a second parking premise of the parking premises when the parking spot is not available in the first parking premise of the parking premises.

21: 2023/00956. 22: 2023/01/23. 43: 2023/03/09
51: F03D; H04L; G06Q
71: LOVELY PROFESSIONAL UNIVERSITY
72: POOJA MALIK, PRAVEEN KUMAR MALIK
54: IOT AND DEEP LEARNING BASED SMART RENEWABLE ENERGY SYSTEM
00: -
The present invention is related to an IoT and deep learning based predication of the solar and wind based renewable energy system. The system includes a solar measurement module (100), a wind measurement module (200), a gateway (30), a cloud server (50), a deep learning algorithm (40) and a user dashboard (60). Based upon the real time data and historical data fast, accurate and reliable predication is done for solar radiation intensity, wind speed, renewable generated power. This ensures access to affordable, reliable and sustainable clean energy to meet growing power demand.

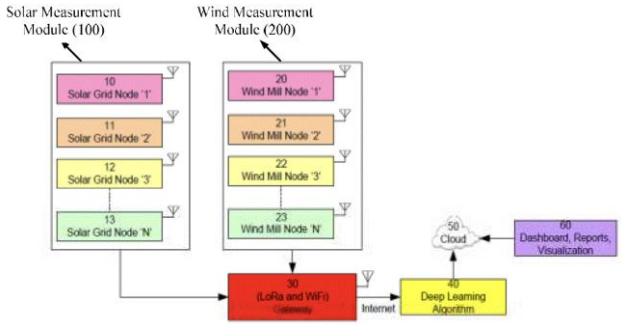

21: 2023/00957. 22: 2023/01/23. 43: 2023/03/09
51: B03C; C02F
71: LOVELY PROFESSIONAL UNIVERSITY
72: Tanay Saha, Prashant Kumar, Dr. Kamaljeet Singh Samra
33: IN 31: 202211032679 32: 2022-06-08
54: A NOVEL PROCESS FOR BATTERY RECYCLABILITY FOR USE IN SUPERCAPACITOR
00: -
The present invention relates to novel process for utilizing the dead batteries, extracting their raw materials, washing, cleaning, chemical treatment, autoclaving, and drying. The invention is suitable enough for present scenario as it works on

recyclability principle and utilizes the dead batteries for conversion of MnO2 to Mn3O4 for use in super capacitors. The process is economical and industrially scalable. The said process is so well designed that the major raw materials used in the process can be recycled and reused. The said particles prepared are used in super capacitors for energy storage application.

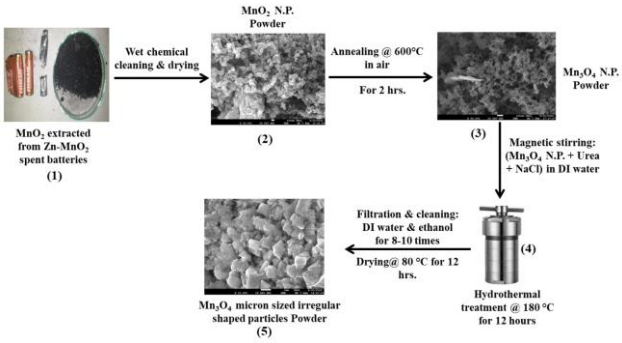

21: 2023/00958. 22: 2023/01/23. 43: 2023/03/09
51: H04B; H04L
71: LOVELY PROFESSIONAL UNIVERSITY
72: SHAIK NILOFER, PRAVEEN KUMAR MALIK
33: IN 31: 202211034501 32: 2022-06-16
54: MODIFIED ENTROPY LEAST SQUARE CHANNEL ESTIMATION FOR 5G MULTI CARRIER SYSTEM
00: -
The present invention is related to high speed wireless data communication channel estimation (CE) using modified entropy employing least square (MELS) method for 5G massive MIMO multi-carrier system for improved reliability and spectrum efficiency. The system includes multi input nodes (200)and multi output nodes (111), a filter bank consisting of Dolphy Chebyshev filter (102), an additive white Gaussian noise (104), a pulse reshaping unit (108) , a plurality of filters (107) and inverse filters (103), offset quarter modulation amplitude (OQAM) modulator (101), and a demodulator (110). The MELS CE provides improved reliability and spectrum efficiency for massive multiple input multiple output (MIMO)-universal filtered multi carrier modulation (UFMC)

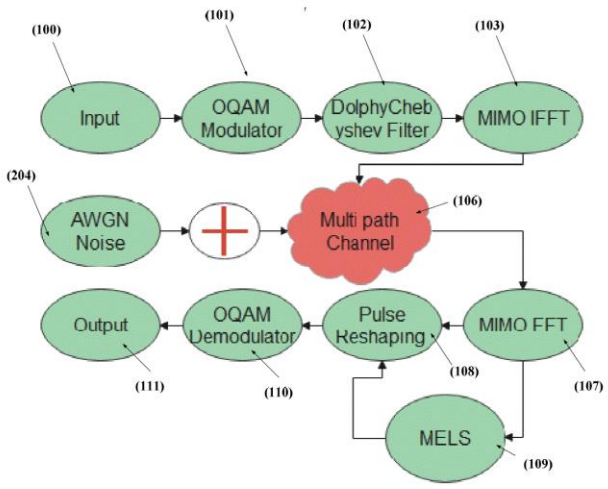

21: 2023/00959. 22: 2023/01/23. 43: 2023/03/09
51: A61K
71: LOVELY PROFESSIONAL UNIVERSITY
72: POONAM CHATURVEDI, PRIYANKA RISHI
33: IN 31: 202211038164 32: 2022-07-01
54: PLANTAR ARCH STIMULATOR FOR FLAT AND PRONATED FOOT
00: -
The goal of the present invention is to provide a portable plantar arch stimulator. Using an in-shoe device for stimulating plantar arches, the invention addresses a research gap. In previous creations, the gadget served to alleviate foot pain and prevent deep vein thrombosis. This device will deliver plantar arch stimulation, pain alleviation, and enhanced blood circulation. Since our technology is non-invasive, it can be used on any individual, including those with metabolic issues.

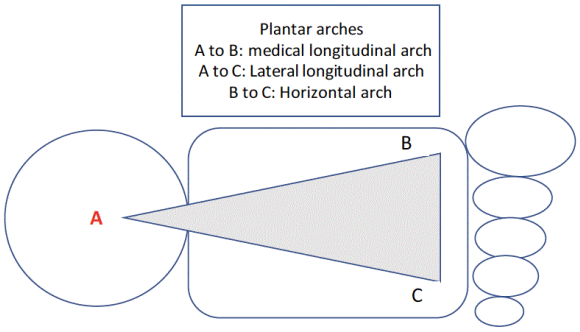

21: 2023/01001. 22: 2023/01/23. 43: 2023/04/25
51: B65D
71: Veraseal Pty Limited
72: Mark Donald Goodall

33: US 31: 16/923,573 32: 2020-07-08
54: CLOSURES AND VESSELS WITH CLOSURES
00: -
A closure can close an outlet of a vessel. The vessel outlet can comprise a tubular cavity with an interior surface. The closure can comprise a male portion comprising a distal undersized portion, a proximal oversized portion, and a taper between the undersized and oversized portion. The male portion can be inserted in the vessel outlet, undersized portion first. Interference between the inner diameter of the vessel outlet and the outer diameter of male portion can occur when the male portion is sufficiently inserted. The interference can cause the undersized portion to flare out and engage the interior surface of the tubular cavity, thereby providing a seal.

21: 2023/01006. 22: 2023/01/24. 43: 2023/03/09
51: F24F
71: LOVELY PROFESSIONAL UNIVERSITY
72: Dr. Poonam Chaturvedi, Dr. Priyanka Rishi
33: IN 31: 202211043862 32: 2022-08-01
54: A NOVEL DEVICE FOR FROZEN SHOULDER
00: -
The present invention relates to a device is having three parts, a rigid surface mounted motor (101) for attaching to the wall as well as movements, plurality of springs (102) for attaching to the cups which can be expanded and contracted as per requirements, plurality of cups (103) which are attached firmly to the frozen shoulder for gripping. The cups have an outer rigid lining (104) for support and inner fibrous lining (105) for holding on to the soft muscles. The device has plurality of modes which can be used for heating, drug infusion as prescribed by the doctor time to time. The device is cost effective and can be used both indoor and outdoors.

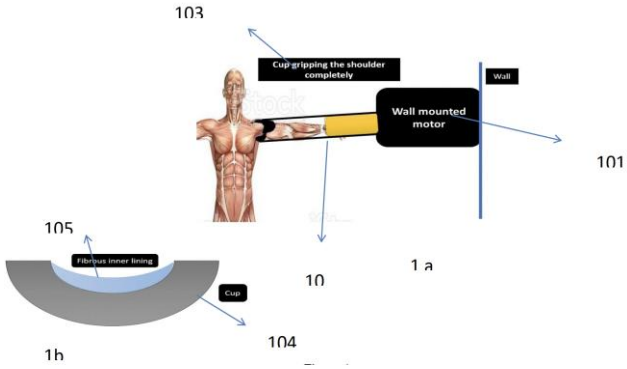

21: 2023/01011. 22: 2023/01/24. 43: 2023/03/09
51: C02F; F24F; G05B; H04L; H05B
71: LOVELY PROFESSIONAL UNIVERSITY
72: Tara Singla, Ruhul Amin Choudhury, Mandeep Singh, Dr. Atul Kumar Singla
54: INTERNET OF THINGS (IOT) BASED HUMIDIFIER
00: -
Disclosed is an Internet of things (IoT) based humidifier (102) for ensuring an optimum level of moisture in a premise, the humidifier (102) comprising a sensor (112) configured to sense signals representing moisture level; a plurality of diffusers (114a-114n) configured to diffuse a predefined number of sprays; a communication unit (116) configured to communicate with a user device (104) using internet of things (IoT); a processing unit (120) connected to the sensor (112), the plurality of diffusers (114a-114n), the communication unit (116), the processing unit (120) is configured to receive the sensed signals representing the moisture level from the sensor (112); determine the moisture level in the premise based on the received sensed signals; generate an activation signal when the determined moisture level in the premise is below a predefined level stored in a memory (118); activate the plurality of diffusers (114a-114n) based on the generated activation signal.

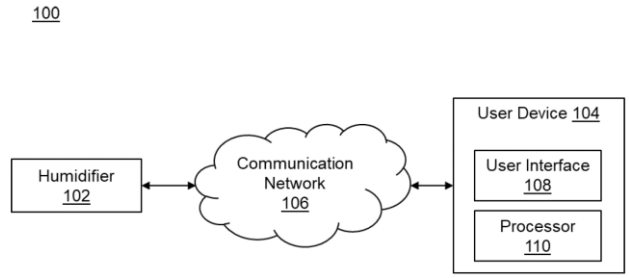

21: 2023/01013. 22: 2023/01/24. 43: 2023/04/25

51: G01N; H04N
71: LOVELY PROFESSIONAL UNIVERSITY
72: Mandeep Singh, Ruhul Amin Choudhury, Lovi Raj Gupta, Kotharu Shanmukh Kiran

54: APPARATUS FOR PREDICTING STRUCTURAL INTEGRITY OF WOODEN FURNITURE

00: -

Disclosed is an apparatus (100) to predict a structural integrity of a wooden furniture, the apparatus (100) comprising an ultrasonic sensor (106) configured to sense signals representing irregularity within the wooden furniture; a thermal camera (108); and a controller (112) connected to the ultrasonic sensor (106) and the thermal camera (108), wherein the controller (112) is configured to: receive the sensed signals representing irregularity within the wooden furniture and a thermal image from the ultrasonic sensor (106) and the thermal camera (108) respectively; determine a plurality of parameters based on the received sensed signals, wherein the parameters are selected from, one of, a wooden furniture quality, rotting wooden furniture, internal wooden furniture damage, or a combination thereof; determine a presence of live insects within the wooden furniture based on the received thermal image of the wooden furniture to predict the structural integrity of the wooden furniture.

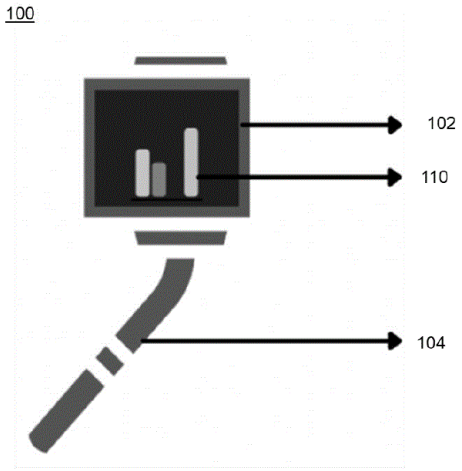

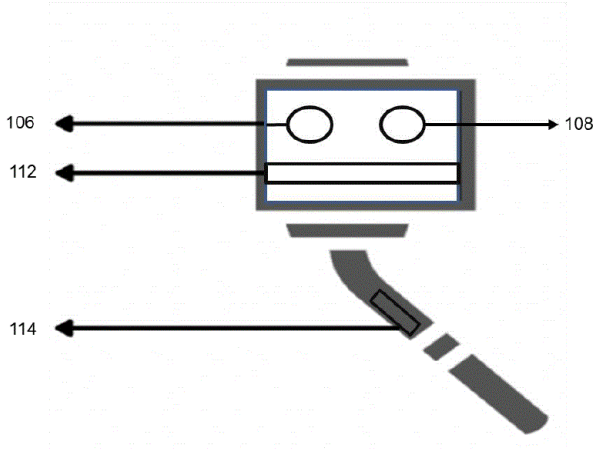

21: 2023/01014. 22: 2023/01/24. 43: 2023/04/25
51: A61B; G06K; H04N
71: LOVELY PROFESSIONAL UNIVERSITY
72: Mandeep Singh, Ruhul Amin Choudhury, Kotharu Shanmukh Kiran, Sorabh Lakhanpal, Rohit Vij

54: GLARE ELIMINATION SYSTEM AND METHOD THEREOF

00: -

A glare elimination system (100), comprising: a device (102) installed within an automobile, comprises: a camera (104) arranged at a predefined location in the automobile, and configured to continuously capture videos, the camera (104) equipped with a lens (106) capable of removing glare effect from the captured videos; a depth sensor (108) arranged with the camera (104), and configured to sense surroundings for determining obstacles coming in a way of the automobile; a

processing unit (112) communicatively coupled to the device (102), configured to: receive the glare-free videos and the determined obstacles from the camera (104) and the depth sensor (108) respectively; process the glare-free videos for optimizing and enhancing the videos; determine a safe driving distance limit based on the determined obstacles; generate safety markings based on the determined safe driving distance limit; and display the glare-free enhanced videos on a display unit (110).

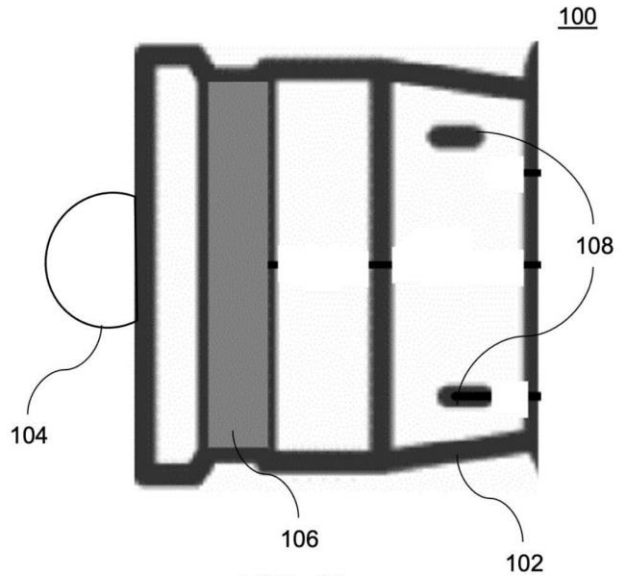

21: 2023/01015. 22: 2023/01/24. 43: 2023/04/25
51: G06K; H04B
71: LOVELY PROFESSIONAL UNIVERSITY
72: Mandeep Singh, Ruhul Amin Chaudhary, Kotharu shanmukh kiran, Pooja Rana

54: MEDICAL IDENTIFICATION SYSTEM AND METHOD THEREOF

00: -

A medical identification system (100), comprising: a wearable device (102) adapted to be worn by a first user, the wearable device (102) comprises: a metallic strip (104), comprises scannable code to be scanned by a second user using a user device (110) to retrieve pre-stored medical information of the first user; a processing unit (106) configured to: receive the scanned code associated with the wearable device (102) of the first user; validate an identity of the first user by comparing the scanned code with predefined codes stored corresponding to details of the first user in a database (108); fetch the medical information of the first user when the scanned code is matched with one of, the predefined codes; and display the fetched medical information of the first user on the user device (110) of the second user.

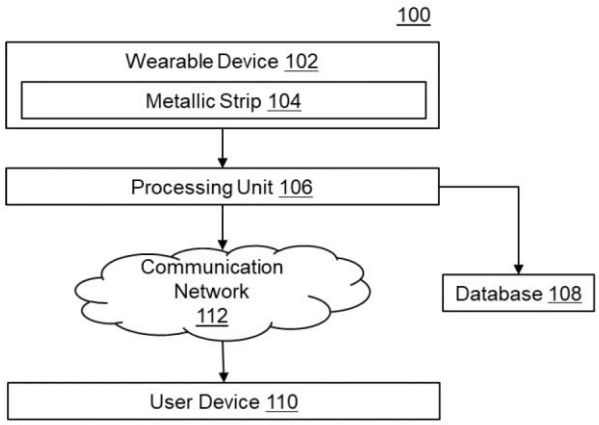

21: 2023/01016. 22: 2023/01/24. 43: 2023/03/09
51: H02S; F24S
71: LOVELY PROFESSIONAL UNIVERSITY
72: Mandeep Singh, Ruhul Amin Chaudhary, Lovi Raj Gupta

54: INTERNET OF THINGS BASED SOLAR POWER GENERATION SYSTEM AND METHOD THEREOF

00: -

An Internet of Things (IoT) based solar power generation system (100), comprising: a trolley (102) to mount a solar panel (104); wheels (106a-106n) configured to provide a rolling motion to the trolley (102); a wind sensor (108) configured to measure a flowing wind speed; a dualaxis solar sensor (110) configured to track a location of the sun for collecting solar energy; and a processing unit (112) configured to: receive the measured flowing wind speed, and the tracked location of the sun; compare the measured wind speed with a predefined wind speed; actuate a motor to fold the solar panel (104), when the measured value of the wind speed is more than the predefined wind speed; and actuate the motor to rotate the solar panel (104) for alignment of the solar panel (104) in a direction of the sun to collect the solar energy.

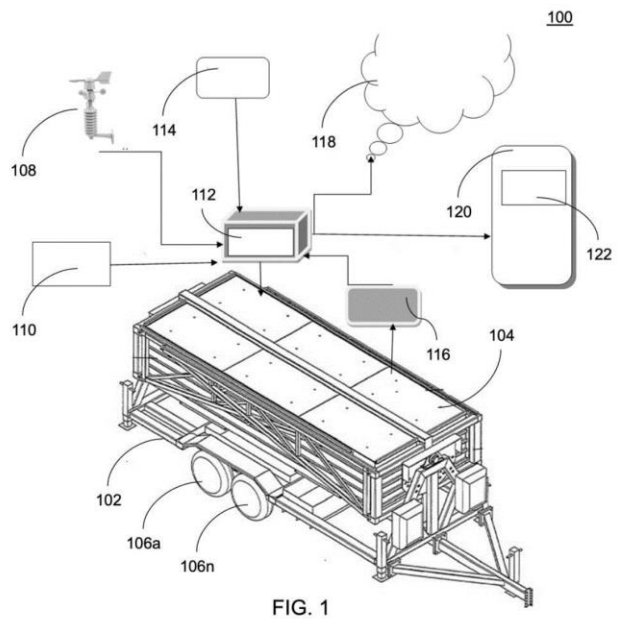

FIG. 1

21: 2023/01017. 22: 2023/01/24. 43: 2023/04/25
51: A61L; C02F
71: LOVELY PROFESSIONAL UNIVERSITY
72: Dr. Neeta Raj Sharma, Shweta Kaushik, Thekkevilayi George Thomas, Dr. Runjhun Tandon
33: IN 31: 202211043004 32: 2022-07-27
54: A NOVEL ECO-FRIENDLY FORMULATION FOR CONTROLLING DENGUE VECTOR
00: -
The present invention relates to a novel formulation to kill dengue virus. The formulation is an ethanolic extract of Aegle marmelos. The formulation is capable enough of killing mosquito larvae in the 3rd phase itself. The formulation is made from the leaves of the plant. The formulation is non toxic and is environment friendly. The said formulation is economical and the spray prepared can be used commercially to kill mosquito larvae found growing in water. The process of making the spray is cost effective and industrially scalable. The said invention is more environment friendly as it produces more economical, sustainable, industrially viable formulation to control the dengue virus.

21: 2023/01166. 22: 2023/01/30. 43: 2023/03/09
51: G01S
71: Central South University
72: Qifeng CHEN, Ziyuan ZOU, Peng LI, Yunhe MENG, Jian DAI
33: CN 31: 202210455564.9 32: 2022-04-24
54: A TARGET ASSIGNMENT METHOD FOR SPACECRAFT GROUP COUNTERMEASURES BASED ON DECISION TREE SEARCH
00: -
The embodiment of the invention provides a target assignment method for spacecraft group countermeasure based on decision tree search which includes the collaborative interception probability estimation of the intercepting spacecraft obtained; Taking the assignment quantity constraint, the reachability constraint, and the complete assignment constraint as the constraints, and taking the preset multi-level index optimization as the goal, the optimization model of the group countermeasure target assignment strategy is obtained. Based on the optimization model of the group countermeasure target assignment strategy, the search calculation is carried out to obtain the group countermeasure target assignment solution. Taking the assignment quantity constraint, the reachability constraint, and the complete assignment constraint as the constraints, and taking the preset multi-level index optimization as the goal, the optimization model of the group countermeasure target assignment strategy is obtained, the corresponding search decision is constructed by using the target assignment guidance table to carry out the search and calculation, to avoid the repeated calculation of the interception probability of the same spacecraft/target assignment combination, which shortens the calculation time and improves the target assignment speed of the spacecraft greatly.

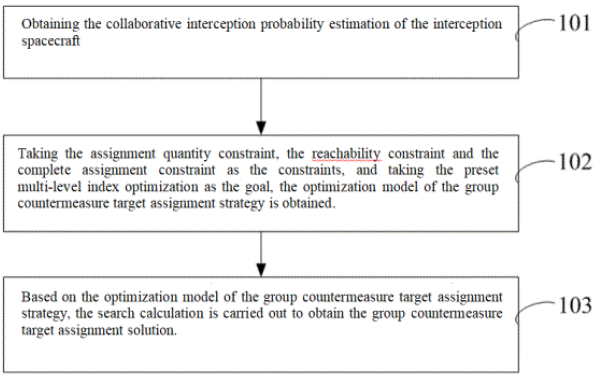

21: 2023/01167. 22: 2023/01/30. 43: 2023/04/25
51: G06F
71: Guangdong Open University (Guangdong Polytechnic Institute)
72: CAI, Bin
54: METHOD AND SYSTEM FOR BUILDING USER-LEVEL THREAD MANAGEMENT ENVIRONMENT
00: -
Provided are a method and system for building a user-level thread management environment. The present invention decouples service processing of an application system and running management of user-level threads, to achieve general functions of creation, scheduling, synchronization, migration, and destruction of the user-level threads, shields applications from complexity of running and management of the user-level threads, and provides application programming interfaces similar to thread running models. The user-level thread applications can register service-defined processing task functions into an environment in a mode of the user-level threads only by the application programming interfaces provided by means of the environment, without concern for a mode of scheduling, execution, and management of the specific processing task functions, thereby greatly reducing complexity of development of the user-level thread applications and difficulty of upgrading maintenance.

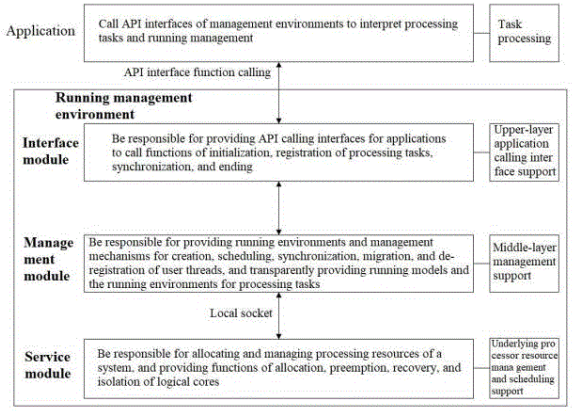

21: 2023/01168. 22: 2023/01/30. 43: 2023/03/09
51: A01N; C12R
71: Shanghai Jiao Tong University
72: CHEN, Jie, LIN, Zhenya, YI, Siyao, LI, Yaqian, SUN, Ruiyan
54: PREPARATION METHOD OF TRICHODERMA BIOCONTROL GRANULES BASED ON SORGHUM GRAIN CARRIERS
00: -
Disclosed is a preparation method of Trichoderma biocontrol granules based on sorghum grain carriers. The method includes steps of soaking sorghum seeds in a fermentation broth prepared from an antagonistic Trichoderma strain, namely Trichoderma harzianum SH2303, then taking out soaked sorghum seeds, coating the sorghum seeds with a film forming agent and a nutrient carrier, and drying the prepared granules for storing. The present disclosure can achieve the objectives of preventing and controlling soil-borne diseases and promoting growth of crops by using the above antagonistic Trichoderma strain. The present disclosure overcomes the defects that Trichoderma growth and reproduction are easily affected by insufficient nutrients in soil and complicating environments, and mechanical fertilization cannot be carried out for the application of the Trichoderma granules, and provides nutrients for the antagonistic Trichoderma to propagate massively, so as to improve the competitiveness of the Trichoderma in the soil.

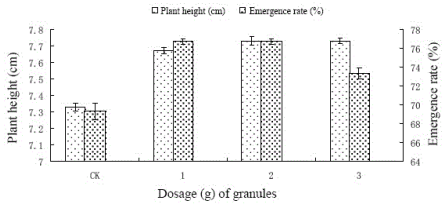

Influences of *Trichoderma* sorghum granules with different dosages on plant height and emergence rate of corn

21: 2023/01169. 22: 2023/01/30. 43: 2023/03/09
51: E21D
71: China Railway 16th Bureau Group No.1 Engineering Co., Ltd.
72: ZHU, Guanglei, WU, Tianhua, CHEN, Mingyang, ZHANG, Shuailong, LU, Qingzhao, GAO, Shiwei, ZHENG, Xingli, WANG, Guoqiang, WU, Wensheng, SUO, Tong
33: CN 31: 202211624461.7 32: 2022-12-16
54: TUNNEL CONSTRUCTION METHOD FOR WATER-RICH FAULT FRACTURE ZONE
00: -
A tunnel construction method for a water-rich fault fracture zone is provided, including: performing advanced geological prediction in a tunnel construction area to obtain the occurrence characteristics and distribution of the water-rich fault fracture zone; determining a tunnel excavation contour line according to the occurrence characteristics and distribution of the water-rich fault fracture zone; dividing the water-rich fault fracture zone into a water-blocking zone and a solidification zone based on the tunnel excavation contour line; building a grout stopping wall at a position of a tunnel face of the construction area, and arranging drain holes and grouting holes on the grout stopping wall; pouring a chemical grout into the water-blocking zone via the grouting holes, and pouring a cement grout into the solidification zone via the grouting holes; and evaluating the grouting effect in the solidification zone to obtain an evaluation result.

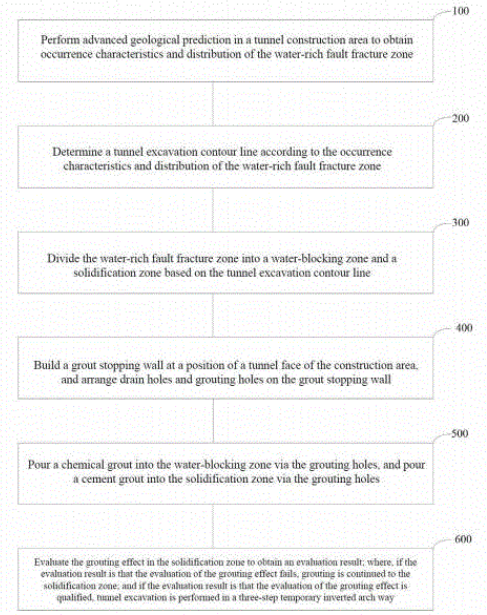

21: 2023/01170. 22: 2023/01/30. 43: 2023/04/25
51: A01G; A01N; A01P
71: Jiangxi Agricultural University
72: HU, Wei, LIU, Yong, YU, Xuan, LIU, Dechun, YANG, Li, KUANG, Liuqing
33: CN 31: 202210218022.X 32: 2022-03-08
54: METHOD FOR INHIBITING CITRUS FRUIT PUFFINESS
00: -
The present invention belongs to the technical field of fruit planting, and particularly relates to a method for inhibiting citrus fruit puffiness. The gibberellin is adopted to promote color change delay of citrus fruits, delay fruit senescence, and reduce the production of ethylene so as to alleviate and delay the occurrence of fruit puffiness; meanwhile, the propyl dihydrojasmonate is combined to make up for the detect of uneven fruit coloring caused by the gibberellin, so that citrus fruits are colored evenly while the fruit puffiness is alleviated. The embodiments show that the citrus fruit puffiness inhibitor provided by the present invention can significantly reduce the puffiness index, without significant influence on the fruit quality, and the puffiness index can be reduced by 24.6 percent-61.1 percent.

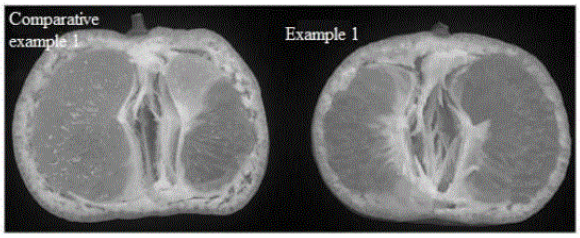

21: 2023/01171. 22: 2023/01/30. 43: 2023/03/09
51: A61G
71: Suzhou University
72: HAN, Jun, ZHANG, Shufang
33: CN 31: 202211119149.2 32: 2022-09-13
54: INTELLIGENT NURSING BED CAPABLE OF PREVENTING BEDSORES AND USED FOR HOME-BASED CARE OF DISABLED ELDER
00: -
The present disclosure discloses an intelligent nursing bed capable of preventing bedsores and used for home-based care of a disabled elder, and belongs to the technical field of nursing beds. The intelligent nursing bed includes a bed board and bed legs, a moving mechanism is arranged outside the bed board, and includes a conveying belt, a drive motor is installed outside the conveying belt, a belt is installed outside an output shaft of the drive motor, a rotary shaft is installed outside the bed board, a driving gear is installed outside the rotary shaft, a driven gear is movably arranged outside the bed board, a connecting bar is installed outside the driven gear, a cushion block is installed at an end, away from the driven gear, of the connecting bar, and an annular mattress is installed outside the conveying belt.

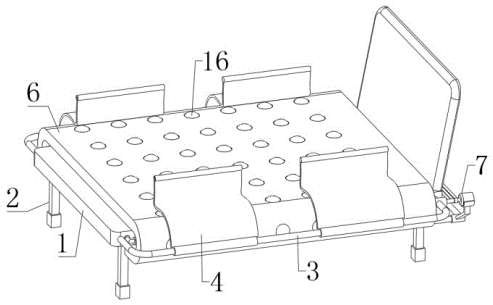

21: 2023/01172. 22: 2023/01/30. 43: 2023/03/09
51: A01C; A01G
71: Dingxi Academy of Agricultural Sciences
72: PAN, Xiaochun, LI, Li, WANG, Fusheng, WEN, Yinhua, ZHANG, Ming, YANG, Rongzhou, LIU, Lili, WANG, Wenjuan, ZHANG, Haijie, SHI, Lili, FENG, Mei
54: NOVEL ANGELICA SINENSIS SEEDLING MEDIUM
00: -
Disclosed is an Angelica sinensis seedling medium and a seedling cultivation method. A straw powder layer, a soil layer A, a fertilizer layer, a soil layer B and a thin fine sand layer are successively arranged from bottom to top in a trapezoidal culture bed. After sowing, Angelica sinensis seeds can absorb nutritional ingredients in an initial nutrient solution after initial fertilizer application to guarantee budding and seedling emergence. Root systems of emerging Angelica sinensis seedlings can further absorb nutritional ingredients in the fertilizer layer to guarantee growth of the root systems of the Angelica sinensis seedlings, so that growth of the roots, stems and leaves of Angelica sinensis plants can be further guaranteed. A mid nutrient solution after mid fertilizer application can guarantee mid nutrition supply of the Angelica sinensis seedlings, so that the rate of emergence of Angelica sinensis seedlings is improved.

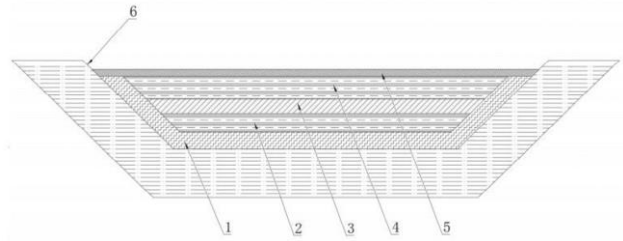

21: 2023/01173. 22: 2023/01/30. 43: 2023/03/09
51: A01C; A01G
71: Southwest Forestry University
72: WANG, Juan, PAN, Yue, PU, Tian, CHEN, Wandong
54: PLANTING METHOD FOR IMPROVING SURVIVAL RATE OF MALANIA OLEIFERA
00: -
Provided is a planting method for improving the survival rate of Malania oleifera. The method includes sand bed preparation step, seed preparation step, germination step, germination management step, transplanting site preparation step, transplanting step and post-transplanting management step. When the seeds are prepared, the peels of fresh fruits are peeled off to obtain the

fresh seeds of Malania oleifera, the seeds with normal development are selected and washed in clean water to wash off the residual peel and mucus on the surface of the seeds, and the seeds are sterilized. The germination step is to bury the sterilized seeds of Malania oleifera evenly in the sand bed evenly in the sand bed. The seeds of Malania oleifera are dug out from the sand bed and planted in the transplanting site when they germinate and the lateral roots of the seed radicle differentiate.

21: 2023/01174. 22: 2023/01/30. 43: 2023/03/09
51: G03B
71: BEIJING DASHENFENGHUA TECHNOLOGY CO., LTD.
72: LIU, Shangyuan, BAI, Wei, LIU, Wei
54: METHOD FOR RECODING ULTRA-HIGH-DEFINITION DIGITAL IMAGE ONTO MICROFILM
00: -
A digital image shooting device, which outputs a digital image onto a microfilm, is an important device to realize heterogeneous backup of an electronic file. In the prior art, an exposure shutter of a shooting device in which a digital image is outputted onto a microfilm, an electronic shutter of a mechanical structure is employed or a liquid crystal display backlight power supply is turned off, with components vulnerable to damage, which results in limited service life of the device. The present invention provides a method for outputting an ultra-high-definition digital image onto a microfilm, and this method is characterized by rapid imaging, stable operation, simple device structure, and long service life.

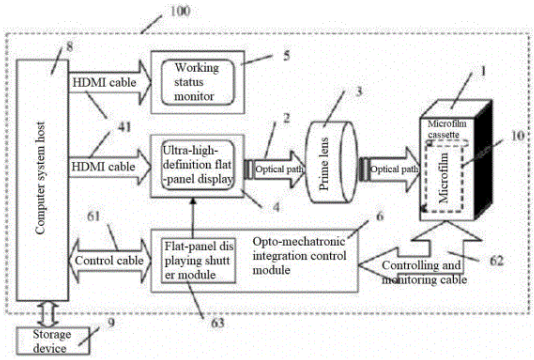

21: 2023/01175. 22: 2023/01/30. 43: 2023/03/09
51: A61K; A61P
71: SINO-AGRI Pet Nutrition Research Institute (Jiangsu) Co., Ltd.
72: WU, Yi, ZHANG, Mingrui, MO, Ruixia, ZHOU, Weiwei, WANG, Haotian, MA, Dongli
54: NUTRITIONAL PASTE BENEFICIAL TO ENHANCING IMMUNITY AND PREPARATION METHOD THEREOF
00: -
Provided is a nutritional paste beneficial to enhancing immunity, the components of nutritional paste by mass percentage are: 2 - 8 percent of components beneficial to enhancing immunity, 0.2 - 1 percent of multivitamins, 0.1 - 2 percent of lysine, 0.5 - 5 percent of taurine, 0.5 - 2 percent of arginine, 15 - 25 percent of chicken liver powder, 15 – 25 percent of chicken meal, 20 - 50 percent of maltose syrup, 1 - 5 percent of calcium hydrogen phosphate, 0.1 - 1 percent of preservative, 1 - 6 percent of emulsifier, 0.2 - 1 percent of colorant, and the rest is supplemented by water. Disclosed includes a preparation method of the nutritional paste. The nutritional paste can tonify the blood and invigorate the vitality, improve the hematopoietic ability of the body in a safe and efficient manner, effectively improve the iron-deficiency anemia and enhance immunity.

21: 2023/01176. 22: 2023/01/30. 43: 2023/03/09
51: B22C
71: Yangtze Normal University, Anhui University of Science and Technology
72: ZHANG, Lin, HUANG, Jiangbo, WANG, Chengjun, YAO, Zhenghua
54: THREE-DIMENSIONAL VIBRATORY COMPACTION-BASED CASTING PLATFORM FOR HYDRAULIC SUPPORT
00: -
Disclosed is a three-dimensional vibratory compaction-based casting platform for a hydraulic support. The three-dimensional vibratory compaction-based casting platform includes a base, a vibration table, a hydraulic support sand box to be vibrationally compacted, a clamping mechanism and a sand box operating mechanism. The hydraulic support sand box to be vibrationally compacted is driven to move on a sand box operating track by means of the sand box shafts, and the sand box to be vibrationally compacted slides to a position above the vibration table on the sand box operating track. After vibratory compaction is completed, the sand

box to be vibrationally compacted falls back to the sand box operating track, and can be transported to a next process in a labor-saving manner, thereby achieving the effects of simpleness, rapidness, time saving and labor saving.

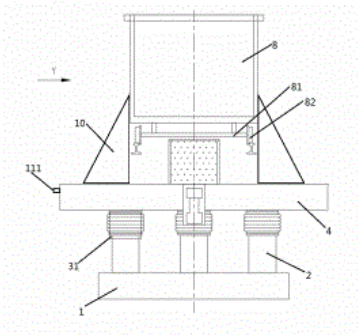

21: 2023/01177. 22: 2023/01/30. 43: 2023/03/09
51: A01K; C02F
71: Rushan Marine and Fishery Supervision Brigade, Rushan Marine Economic Development Center, Huancui District Marine Development Research Center
72: PAN, Yulan, SHAN, Xiaoluan, LIU, Haoming
54: CIRCULATING WATER TREATMENT DEVICE FOR AQUACULTURE
00: -
Disclosed is a circulating water treatment device for aquaculture. The device includes a rainwater collecting device, a biological filtering device and an activated carbon filtering device, where the biological filtering device is connected to the activated carbon filtering device by means of a third water pipe, and the activated carbon filtering device is connected to a water inlet of the fish pond by means of a fourth water pipe; the rainwater collecting device is provided with a rainwater collecting opening, and the rainwater collecting opening is configured to collect rainwater; the biological filtering device is internally provided with a plurality of biological membranes; and the activated carbon filtering device is internally provided with an activated carbon adsorption layer. According to the present invention, a multi-layer filtering device is used to remove impurities in water, and a filtering effect is desirable.

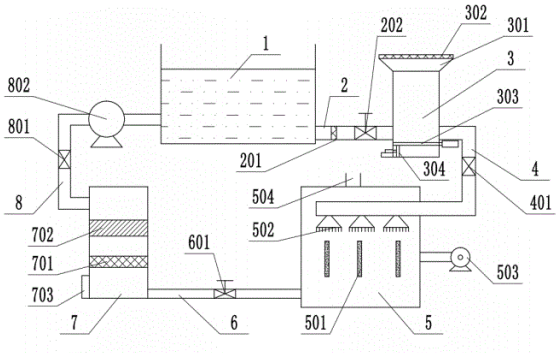

21: 2023/01178. 22: 2023/01/30. 43: 2023/03/09
51: C08F
71: Guang'an Vocational And Technical College, Sichuan Polyseed Polymer Materials Co., Ltd.
72: LI, Yuanpeng, PU, Taohong, WU, Xun, DU, Jingjing, TANG, Liping
54: PREPARATION METHOD OF POLYVINYL ALCOHOL WITH LOW POLYMERIZATION DEGREE BY SURFACTANT-FREE EMULSION POLYMERIZATION
00: -
The present invention provides a preparation method of polyvinyl alcohol (PVA) with a low polymerization degree by surfactant-free emulsion polymerization, which includes the following steps: preparing polyvinyl acetate by surfactant-free emulsion polymerization, and performing alcoholysis on the prepared polyvinyl acetate to obtain PVA with a low polymerization degree. The inventors of the present invention design and optimize a preparation method of PVA with a low polymerization degree by surfactant-free emulsion polymerization through control and gradient experiments based on the principle of surfactant-free emulsion polymerization, which has high monomer conversion rate, can adjust a polymerization degree of PVA by adjusting an addition amount of chain transfer agent, and has the advantages of novelty, unique route, and suitability for industrial production.

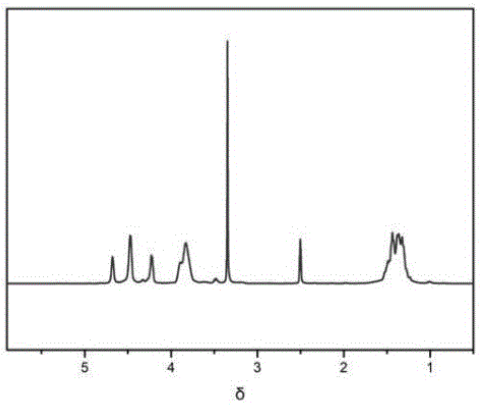

21: 2023/01179. 22: 2023/01/30. 43: 2023/03/10
51: A01G
71: Tianjin Academy of Agricultural Sciences
72: ZHOU, Yongbin, LUO, Ying, ZHANG, Zhijun, LIU, Lianqiang, LI, Fengmei, WANG, Wenzhi, ZI, Huijun, CHEN, Xiaoming, LI, Shufang, DAI, Jianliang, FANG, Jun
54: FRUITING METHOD OF PLEUROTUS NEBRODENSIS
00: -
Provided is a method of fruiting pleurotus nebrodensis again by using wastes removed during scratching is provided. A technical solution includes: collection of wastes, recovery of hyphae, inducement to primordium, cultivation of tiny buds and cultivation of a fruit body. The method has the beneficial effects that not only may the wastes be recycled, but also environmental pollution is reduced.

21: 2023/01180. 22: 2023/01/30. 43: 2023/03/10
51: A01K; A23K
71: Tianjin Academy of Agricultural Sciences
72: ZHOU, Yongbin, LI, Fengmei, LIU, Lianqiang, SUN, Yutao, LUO, Ying, ZHANG, Yang, LI, Shufang, ZI, Huijun, CHEN, Xiaoming, ZHANG, Zhijun
54: METHOD FOR PREPARING STARTER CULTURE FOR DEGRADING MUSHROOM BRAN OF EDIBLE MUSHROOMS UTILIZING MICROFLORA OF EARTHWORMS
00: -
A method for preparing a starter culture for degrading mushroom bran of edible mushrooms utilizing microflora of earthworms. The method has the advantages that the selected starter culture with an excellent capacity to degrade lignin and cellulose is high in a degradation rate and pertinence. The method utilizes intestines of insects for enrichment culture directly. The culture environment is suitable for the enrichment and proliferation. Microflora contained in the starter culture are rich in species and can achieve a synergistic effect, and effects are better than that of a single strain. Moreover, the method has no complicated microbial operation process of selecting microflorae and the operation for smashing fresh earthworms is easy to perform. The method can be popularized and implemented on a large scale in an actual production operation, and is easy and feasible to operate.

21: 2023/01181. 22: 2023/01/30. 43: 2023/03/10
51: A23L
71: Tianjin Academy of Agricultural Sciences
72: ZHOU, Yongbin, LUO, Ying, ZHANG, Zhijun, LIU, Lianqiang, WANG, Wenzhi, LI, Fengmei, ZI, Huijun, CHEN, Xiaoming, LI, Shufang, ZHANG, Yang, DING, Shu, FANG, Jun
54: METHOD FOR PROCESSING FOOD BY FERMENTATION OF GANODERMA LUCIDUM IN GRAIN
00: -
A method for processing food by using a fermentation product obtained by taking grain as a liquid culture medium of Ganoderma lucidum includes the steps: preparing a grain liquid culture medium including 15 g of buckwheat, 5 g of soybeans, 20 g of glucose and 1000 ml of water, wherein pH is normal; soaking the buckwheat and the soybeans by adding the water according to a ratio of 1: 2 for 12 hours after picking and washing; then, adding the water to reach a ratio of 1: 10, beating and filtering, and reserving a supernatant; adding the glucose and conducting sterilization; inoculating liquid strains; Ganoderma filtering the fermentation product to obtain mycelia, adding an equal mass of water and conducting treatment; filtering a mycelium extracting solution, combining filtrates with a fermentation stock solution, to serve as a food main body of Ganoderma lucidum fermentation in grain.

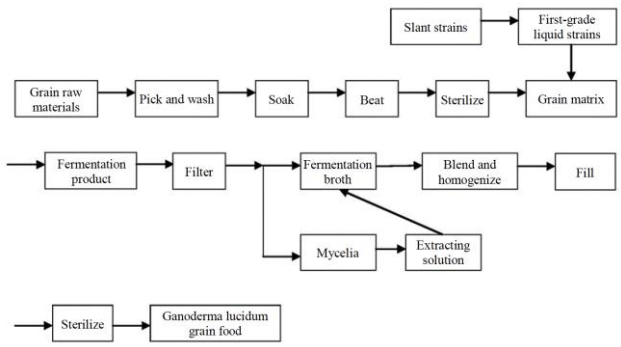

21: 2023/01182. 22: 2023/01/30. 43: 2023/03/10
51: A01G
71: Tianjin Academy of Agricultural Sciences
72: ZHOU, Yongbin, LIU, Lianqiang, ZHANG, Zhijun, ZI, Huijun, LUO, Ying, LI, Fengmei, ZHANG, Yang, LI, Shufang, WANG, Wenzhi, WANG, Mei, CHEN, Xiaoming, CHEN, Long

54: CULTIVATION METHOD OF PLEUROTUS MUSHROOM

00: -

A cultivation method of a Pleurotus mushroom, including preparation of an artificial bed-log -> punching-> washing of the artificial bed-log-> inducement to primordium-> fruiting management-> picking. The cultivation method is characterized by including preparing the artificial bed-log according to conventional practice of the Pleurotus mushroom artificial bed-log, then, punching the planned fruiting position of the artificial bed-log, and placing the punched artificial bed-log in a fruiting house after a surface thereof is washed; after inducement to primordium, and when the primordium appears, regulating the temperature, humidity, illumination and ventilation of the mushroom house, and picking a fruit body when growing into a cauliflower-like shape or a monkey head mushroom shape; and conducting inducement to primordium after clearing the mushroom house, and fruiting again, such that the fruit body can be picked for more than 3 times.

21: 2023/01183. 22: 2023/01/30. 43: 2023/03/10
51: H04W
71: China University of Mining and Technology
72: CHEN, Guoliang, CAO, Xiaoxiang

54: RAPID OFFLINE LOCALIZATION FINGERPRINT DATABASE CONSTRUCTION AND LOCALIZATION METHOD

00: -

Disclosed is a rapid offline localization fingerprint database construction and localization method. The method includes the steps: collecting signal strength information of each access point (AP) by a collector in a video surveillance area, solving position coordinates of a fingerprint point in world coordinates by means of a position of the collector on a frame image in video surveillance, matching the position coordinates of the fingerprint point and the collected signal strength information, and storing the position coordinates in the fingerprint database; and connecting a device to be localized to the AP, and matching scanned and output signal strength information of each AP and the signal strength information in the fingerprint database to obtain position coordinates. In a continuous collection process of the collector, the fingerprint collection efficiency is greatly improved, and manpower and time overhead in fingerprint collection are reduced

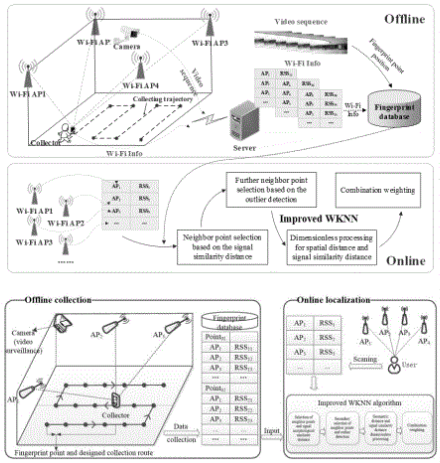

21: 2023/01184. 22: 2023/01/30. 43: 2023/03/10
51: G06Q
71: TANGSHAN MARITIME INSTITUTE
72: ZHANG, Jingdi, WEI, Xianghui, CHEN, Jianzhi, LIU, Xiaoyu, LIU, Yang, LIU, Weiqing, LIU, Rongshuai, CHEN, Jie

54: SMART DORMITORY SAFETY MANAGEMENT SYSTEM

00: -

Disclosed is a smart dormitory safety management system, wherein an electricity safety module is configured to detect a power and a load type of a dormitory and control the on-off of a power supply line supplying power to the dormitory according to the power and the load type; the fireproof safety module is configured to detect whether there is a fire

hazard in the dormitory; the anti-theft safety module is configured to detect whether there is a theft hazard in the dormitory; the personal safety module is configured to detect whether a student in the dormitory lives in his/her own bed; the electricity safety module, the fireproof safety module, the anti-theft safety module and the personal safety module will send an alarm message to a cloud platform, and the cloud platform reminds management personnel to handle the case, so that the comprehensive safety management of the dormitory is realized.

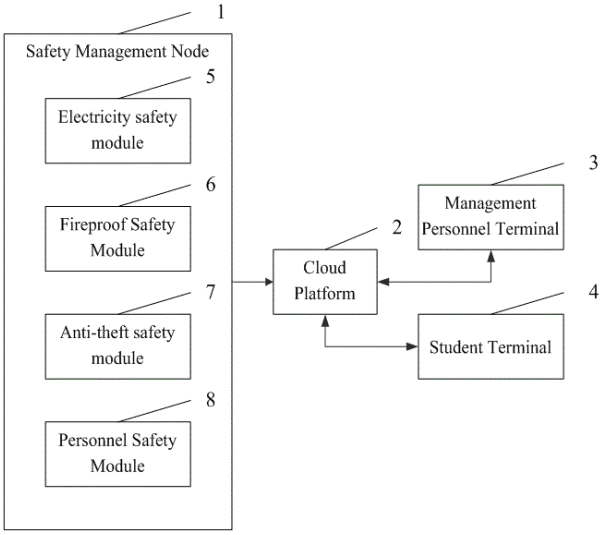

21: 2023/01185. 22: 2023/01/30. 43: 2023/04/25
51: B65G
71: Ningxia Tiandi Northwest Coal Machinery Co. , Ltd.
72: FENG Baozhong, LAN Chunsen, HOU Hongwei, WANG Ning, YANG Jie, MAI Lin, TONG Jianzhong, YANG Hai, WANG Hao, YANG Ping, MA Yupeng, MA Liwei, WANG Xinghong, ZHANG Cheng
54: TRACTOR FOR TELESCOPIC DEVICE OF BELT CONVEYOR
00: -
A tractor for telescopic device of belt conveyor in the embodiment of the invention includes a machine frame, a conveying belt, an upper roller, a lower roller and a driving assembly, wherein the conveying belt penetrates through the machine frame along a length direction of the machine frame, the upper roller and the lower roller are both installed on the machine frame along a width direction of the machine frame, the upper roller is positioned above the lower roller, the conveying belt is positioned between the upper roller and the lower roller, and the lower roller is movable between a first position and a second position; in the first position, the lower roller is adjacent to the upper roller to clamp the conveying belt, and in the second position, the lower roller is away from the upper roller, and the driving assembly is used for driving the upper roller and/or the lower roller to rotate. According to the tractor for telescopic device of belt conveyor of the embodiment of the invention, the conveying belt is effectively prevented from slipping, and the tractor moves in the roadway along the conveying belt, so that the moving process is simple, and the conveying efficiency of materials is greatly improved.

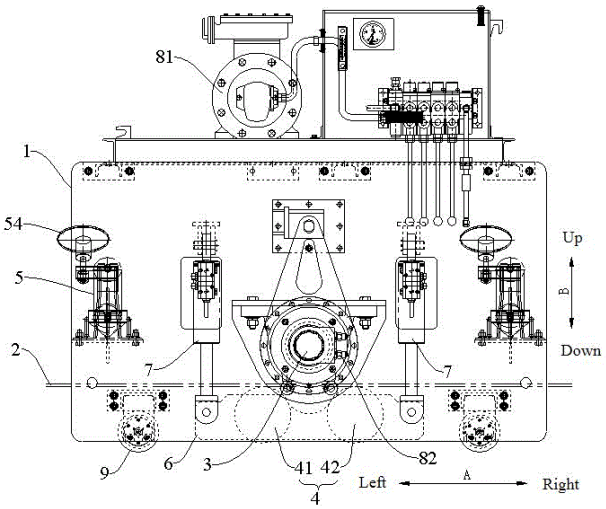

21: 2023/01186. 22: 2023/01/30. 43: 2023/04/25
51: C22B
71: Yunnan Minzu University
72: LIU Chenhui, WANG Yongli, GAO Jiyun, JIA Lijuan, WANG Fang, ZHU Xiongjin, LI Lingbo
33: CN 31: 202210121830.4 32: 2022-02-09
54: METHOD FOR PREPARING METALLIC ANTIMONY BY MICROWAVE DIRECT REDUCTION OF ANTIMONY OXIDE POWDER
00: -
Disclosed is a method for preparing metallic antimony by microwave direct reduction of antimony oxide powder, and relates to the technical field of antimony smelting. The method includes: grinding antimony oxide powder, adding a reducing agent and a fluxing agent, placing the mixture in a microwave reaction system, increasing a temperature from room temperature to a reduction temperature, and keeping the temperature for 20-40 min to obtain crude antimony and soot; carrying out secondary reduction on the antimony oxide dust

recovered in the process of temperature rise, heat preservation and reduction; turning off the microwave after the reduction, and taking out the crude antimony and residual slag after natural cooling. Compared with the traditional smelting process, the smelting process of the invention reduces the reduction temperature, improves the reduction efficiency, reduces the smelting cost, and the crude antimony obtained by reduction is of high purity. In the invention, the process flow is short, the metal direct yield is high, and the process is clean and environmentally friendly, so it has broad industrial application prospects.

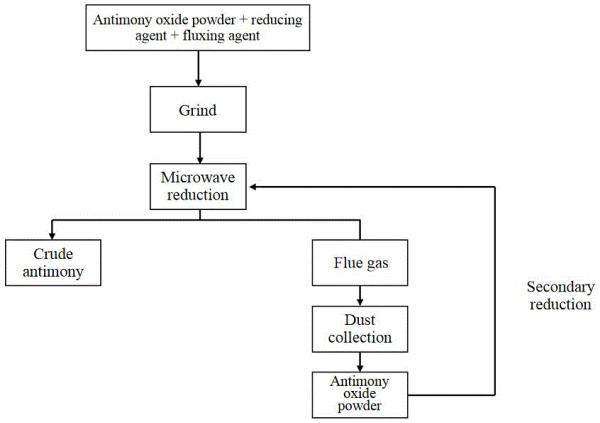

21: 2023/01187. 22: 2023/01/30. 43: 2023/04/25
51: C02F
71: South China University of Technology
72: Liu Weizhen, Li Jie, Lin Zhang, Wang Yunyan, Li Xiaoqin, Ke Yong
33: CN 31: 202210964379.2 32: 2022-08-11

54: METHOD FOR STABILIZING THALLIUM-CONTAINING SLUDGE

00: -

The invention belongs to the technical field of solid waste treatment, and discloses a method for stabilizing thallium-containing sludge.And the invention comprises the following steps: (1) Add oxidant into thallium-containing sludge, stir and react until oxidation is complete; (2) Add a solidification agent into the mixed solution treated in the step (1), add alkali to adjust the pH to 10~14, perform a fixed reaction at the temperature of 120~140oC, and perform solid-liquid separation on the materials after the reaction to obtain the fixed liquid and the solidified product; the solidification agent is one or the combination of two of K3PO4 and Na2SiO3. The solidification agent used in the method of the invention is cheap and easily available, the process operation is convenient, the stabilization effect on thallium and other heavy metals is good, and it has important practical significance in the field of hazardous waste treatment and disposal.

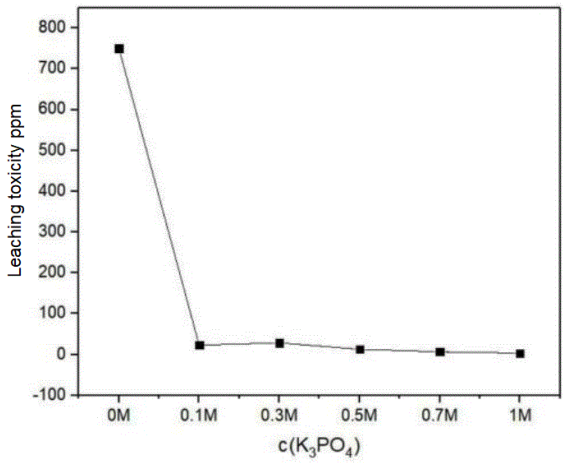

21: 2023/01188. 22: 2023/01/30. 43: 2023/04/25
51: D06F
71: University of Jinan
72: WU Wei, SU Beile
33: CN 31: 202211686410.7 32: 2022-12-26

54: GARMENT IRONING AND SETTING DEVICE

00: -

The invention discloses a garment ironing and setting device, which comprises a workbench for pretreating garments, wherein the workbench comprises a first tabletop and a second tabletop, and the two tabletops are oppositely arranged; the top surface of that first tabletop is provide with an auxiliary unit for compensating the thickness of ironed clothes; the ironing mechanism is used for ironing clothes, and the ironing mechanism comprises two ironing rollers and a pressure adjusting unit, wherein the two ironing rollers are arranged opposite to each other from top to bottom, two ends of the ironing rollers are respectively fixedly connected with fixing plates, and the side surfaces of the fixing plates located above are fixedly connected with the pressure adjusting unit; the ironing roller is arranged between the two tabletops; the ironing roller is communicated with an external high-temperature steam source; the adjusting mechanism is used for adjusting the gap between the two ironing rollers, is covered outside the ironing mechanism, and is rotationally connected with the ironing roller located above. The invention

can realize ironing for woolen clothes and improve the shrinkage recovery rate of woolen clothes.

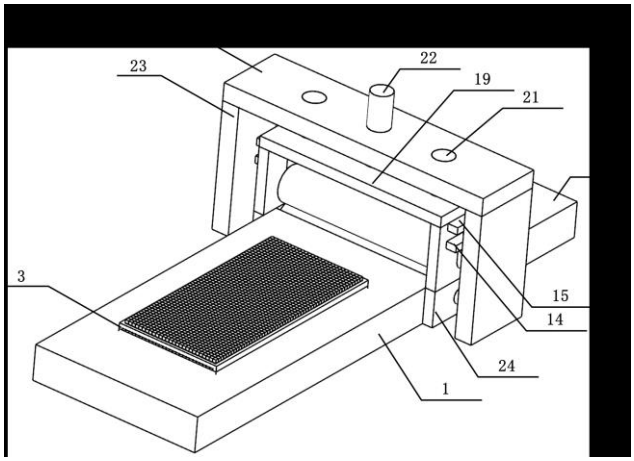

21: 2023/01189. 22: 2023/01/30. 43: 2023/04/25
51: A01G
71: Hunnan Cotton Science Institute, Anxiang County Agriculture and Rural Bureau
72: Xiao Caisheng, Li Fei, Guo Lili, Shi Dazhi, He Shun, Mei Zhengding, Li Caihong

54: CULTIVATION METHOD FOR COTTON CENTRALIZED BOLL OPENING AND HARVESTING

00: -

The invention discloses a cultivation method for cotton centralized boll opening and harvesting, which relates to the technical field of crop cultivation. According the invention, the cultivation method for cotton centralized boll opening and harvesting comprises seed selection, sowing time determination, planting density determination, final singling, fertilization, chemical adjustment, pruning, topping, ripening and defoliation, and two-stage harvesting. The cotton cultivated by the cultivation method for cotton centralized boll opening and harvesting can obviously improve the consistency of plant development and maturity, shorten the harvesting time and improve the economic benefit of centralized harvesting.

21: 2023/01190. 22: 2023/01/30. 43: 2023/04/25
51: G01N
71: Peking Union Medical College Hospital, Chinese Academy of Medical Sciences
72: Cui Na, Li DongKai, Du Bin, Li ZunZhu, Luo HongBo, Long Yun, Cheng Wei, Zhang JiaHui

54: PREDICTION MODEL CONSTRUCTION METHOD FOR PREDICTING SECONDARY DELIRIUM IN ELDERLY SEPSIS PATIENTS

00: -

The invention provides a prediction model construction method for predicting secondary delirium in elderly sepsis patients. First of all, collect patient information, screen the collected information to get variables related to delirium, perform regression analysis by logistic to obtain regression equation, simply visualize the regression equation by nomograph, and finally obtain the prediction model. Through the prediction model of the invention, clinicians can conveniently, rapidly and accurately predict the risk of secondary delirium in elderly sepsis patients, thus providing a basis for prevention and intervention as soon as possible.

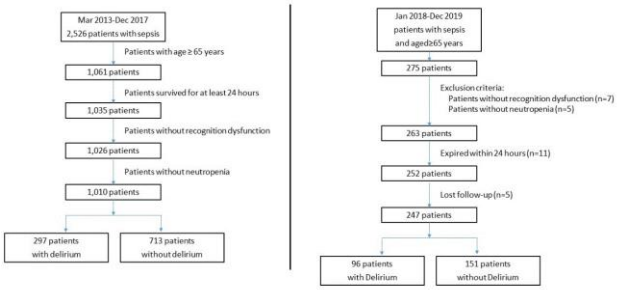

21: 2023/01191. 22: 2023/01/30. 43: 2023/04/25
51: A61L
71: SOUTHWEST FORESTRY UNIVERSITY
72: XIANG Ping, YANG Ziyue, CUI Daolei, PENG Wuguang, BAO Yabo

54: AIR PURIFIER FOR EFFECTIVELY REMOVING INDOOR VOLATILE ORGANIC POLLUTANTS AND PREPARATION METHOD THEREOF

00: -

The invention discloses an air purifier for effectively removing indoor volatile organic pollutants and a preparation method thereof, and relates to the technical field of air purifiers. The raw materials of the air purifier are, by mass, 5-7 parts of ethanol extract of adiantum, 3-4 parts of ethanol extract of aloe, 8-10 parts of ethanol extract of Epipremnum aureum, 3-4 parts of ethanol extract of jasmine and 100 parts of water. The raw materials of the invention are easy to obtain, the preparation method is simple, and it is easy for large-scale industrial production. The air purifier prepared by the invention can quickly decompose volatile organic pollutants

and has the functions of bacteriostasis and releasing negative oxygen ions. While decomposing volatile organic pollutants such as formaldehyde and benzene, it can release negative oxygen ions, which can make people feel happy, relax and help them sleep.

21: 2023/01192. 22: 2023/01/30. 43: 2023/04/25
51: H01L
71: Zhejiang Xinke Semiconductor Co., Ltd.
72: LI, Jingbo, LEI, Jianpeng, WANG, Xiaozhou
33: CN 31: 202210338996.1 32: 2022-04-01
54: V-SHAPED GROOVE MOS STRUCTURE WITH HAFNIUM OXIDE MATERIAL AS GATE DIELECTRIC LAYER AND PREPARATION METHOD THEREOF
00: -
The present invention belongs to the technical field of semiconductor device, and particularly relates to a V-shaped groove MOS structure with hafnium oxide material as a gate dielectric layer and a preparation method thereof. The structure includes a N+ silicon carbide substrate and a gallium nitride epitaxial layer. A growth heterostructure is grown on the N+ silicon carbide substrate; a groove-shaped structure is formed on the surface of the growth heterostructure, and a hafnium oxide film is plated on the upper part of the groove-shaped structure. The preparation method includes: growing the gallium nitride epitaxial layer on the N+ silicon carbide substrate by MOCVD equipment; forming a V-shaped groove with an appropriate slope by an ICP device through controlling the proportion of etching gas; depositing a hafnium oxide film on the groove by using DC magnetron sputtering equipment in combination with appropriate annealing process.

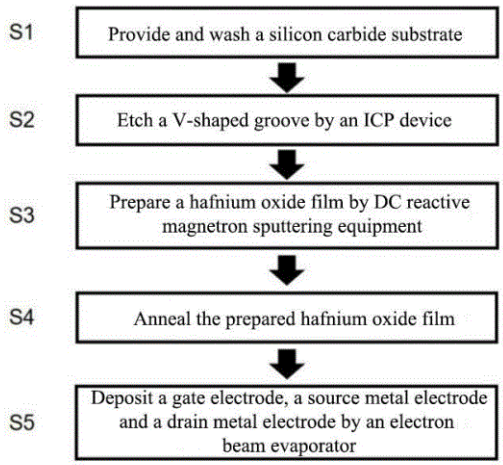

21: 2023/01193. 22: 2023/01/30. 43: 2023/04/25
51: E21D
71: China Railway 16th Bureau Group No.1 Engineering Co., Ltd.
72: LU, Qingzhao, YANG, Wenzhi, GAO, Shiwei, ZHU, Guanglei, YANG, Lihui, YANG, Jiagui, DU, Xinghui, LI, Chunpeng, ZHANG, Cheng, ZHAO, Boqiang
33: CN 31: 202211637513.4 32: 2022-12-16
54: METHOD FOR DETERMINING CRITICAL CATASTROPHIC DISTANCE OF TUNNEL BASED ON CATASTROPHE THEORY
00: -
Provided is a method for determining critical catastrophic distance of a tunnel based on catastrophe theory, including: acquiring parameter data of a tunnel; calculating by substituting the parameter data of the tunnel into a critical distance calculation formula; determining the critical catastrophic distance of the tunnel; a construction method of the critical distance calculation formula: acquiring a disaster-causing structural rock mass and a disaster source structural surrounding rock mass; constructing a simplified mechanical model of the disaster-causing structural rock mass, and constructing a catastrophe calculation model according to the simplified mechanical model and potential energy theory; based on a cusp catastrophe theory, determining an equilibrium surface equation and a bifurcation set equation according to the catastrophe calculation model; obtaining a constraint formula of a necessary condition for the catastrophe in a construction tunnel according to the equilibrium surface equation and the bifurcation set equation.

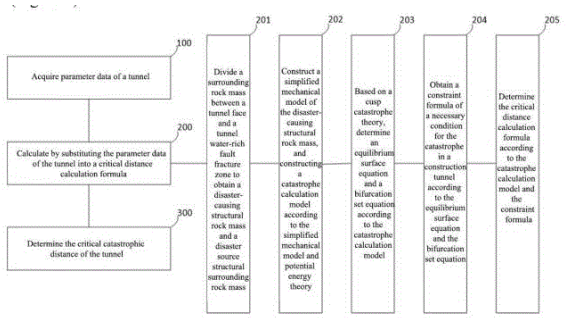

21: 2023/01196. 22: 2023/01/30. 43: 2023/03/10
51: G01M
71: Shenyang Ligong University
72: Ying LI, Shihu WU, Xinjie YANG, Yunjie PAN, Jiawen CHEN
33: CN 31: 202210379488.8 32: 2022-04-12
54: A RECIPROCATING COMPRESSOR BEARING FAULT FEATURE EXTRACTION METHOD
00: -
The present invention provides a reciprocating compressor bearing fault feature extraction method, which belongs to the field of fault diagnosis. The present invention uses an optimised smoothed a priori analysis model method to decompose the reciprocating compressor. The sliding bearing vibration acceleration signal, the detrended term and the trend term data of the vibration signal, the effective noise reduction of the reciprocating compressor signal, as well as the quantitative description of the non-linear behaviour of the bearing vibration signal by solving the sample quantile alignment entropy of the detrended term data, and the more accurate diagnosis of the fault characteristics of the reciprocating compressor by using the feature vector composed of the sample quantile alignment entropy. The present invention overcomes the problem of the lack of obvious effect of de-trending terms due to the empirical selection of smooth a priori analysis model parameters Lambda. Moreover, the sparrow search algorithm is used to find the optimum of the parameters Lambda, which achieves effective noise reduction of the reciprocating compressor signal and facilitates the realisation of reciprocating compressor vibration signal The sparrow search algorithm is also used to find the optimal parameter Lambda. This enables effective noise reduction of the reciprocating compressor signal and facilitates the feature extraction of the reciprocating compressor vibration signal.

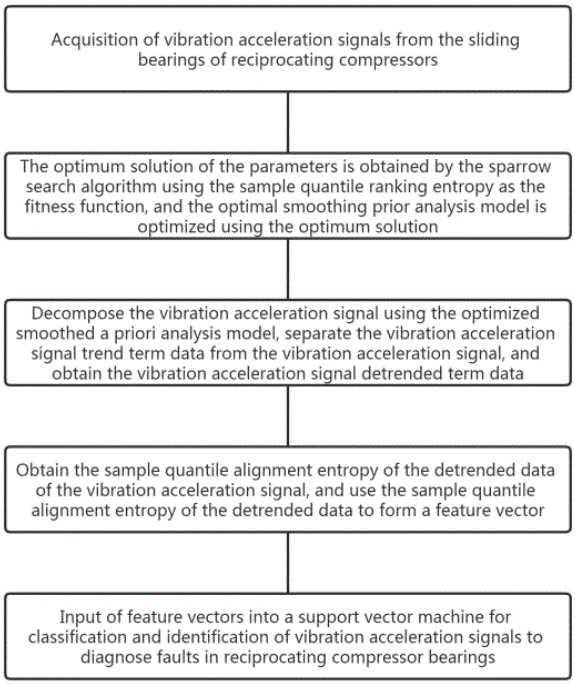

21: 2023/01197. 22: 2023/01/30. 43: 2023/03/10
51: B09C
71: Hunnan Cotton Science Institute, Anxiang County Agriculture and Rural Bureau
72: Li Fei, Xiao Caisheng, Kuang Zhengcheng, Shi Dazhi, He Shun, Mei Zhengding, Li Caihong
54: PLANTING METHOD FOR COTTON-RAPE ROTATION IN CADMIUM METAL POLLUTED SOIL
00: -
The invention discloses a planting method for cotton-rape rotation in cadmium metal polluted soil, and relates to the technical field of crop cultivation. And the planting method comprises the following steps: land preparation, planting density, topdressing outside the roots, chemical control, removal and harmless treatment of cotton stalks, winter rape rotation and turnover and returning to the field. The planting method of the invention adopts the cotton-rape rotation mode, improves the utilization rate of fertilizer, reduces the use amount of chemical fertilizer, realizes the quality improvement, cost saving and efficiency improvement of crop production by optimizing the planting system, developing organic fertilizer substitution, and strengthening the innovation and integration of

fertilizer operation technology. And compared with that of conventional cotton planting, the use amount of chemical fertilizer is reduced by 25%, the utilization rate of fertilizer is increased by 12% and the yield of seed cotton is more than or equal to 250kg/mu.

21: 2023/01208. 22: 2023/01/30. 43: 2023/05/12
51: C06B
71: Dr. Onkar Nath Verma, Vineet Kumar Shukla, Sandeep Kumar Soni, Domeshwar Ram, Dr. Awanish Kumar Upadhyay, Aditya Singh, Rahul Gupta, Dr. Sachin Kumar Gupta, Dr. Abhinav Kumar
72: Dr. Onkar Nath Verma, Vineet Kumar Shukla, Sandeep Kumar Soni, Domeshwar Ram, Dr. Awanish Kumar Upadhyay, Aditya Singh, Rahul Gupta, Dr. Sachin Kumar Gupta, Dr. Abhinav Kumar
54: A SYSTEM AND A METHOD FOR NEUTRALIZATION OF NUCLEAR BOMBS USING ULTRA-HIGH ENERGY NEUTRINO BEAM
00: -
A system (100) and a method (200) for neutralization of nuclear bombs using ultra-high energy neutrino beam, comprises of: a neutrino factory (102) for producing particles with energies much lower than even 1 TeV based on a plurality of characteristics; a plurality of muon collider (104) to collide muon beams with a plurality of TeV of energy; a neutrino beam generator (106) for generating the neutrino beam at a defined energy so that mean free path of the beam's particle is compatible with earth's diameter, wherein the neutrino beam is released tangentially from a muon generating ring (106a) due to a plurality of muon decay; a radiation hotspot formation module (108) for creating radiation hot spots, specifically in straight parts of the ring; and an interaction module (110) for performing a single interaction in the neutrino beam before the neutrino beam strikes the bomb.

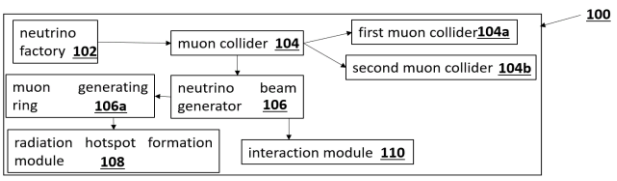

21: 2023/01213. 22: 2023/01/30. 43: 2023/03/10
51: A23L
71: SERICULTURE AND AGRI-FOOD RESEARCH INSTITUTE GUANGDONG ACADEMY OF AGRICULTURAL SCIENCES
72: ZHANG, Ruifen, ZHANG, Mingwei, MA, Yongxuan, CHI, Jianwei, LIU, Lei, HUANG, Fei, JIA, Xuchao, DONG, Lihong, MA, Qin, ZHAO, Dong
33: CN 31: 202010818061.4 32: 2020-08-14
54: CEREAL CARBOHYDRATE MATRIX FOR USE IN FOOD FOR SPECIAL MEDICAL PURPOSE AND PREPARATION METHOD FOR MATRIX
00: -
A cereal carbohydrate matrix for use in a food for a special medical purpose, and a preparation method for the matrix. The preparation method comprises: (1) crushing a cereal to a cereal powder raw material; (2) adding to the cereal powder 3-5 percent of isolated soy protein, 50-60 mL/kg of a high-temperature alpha amylase solution of which the concentration is 8000-10000 U/mL, and mixing evenly; (3) performing steaming and enzymolysis treatments on the cereal powder raw material; (4) extruding the cereal powder treated by steaming and enzymolysis, the temperature for extrusion being 110-130 degrees Celsius, and the rotational speed of an auger being 150-250 r/min; and (5) drying and crushing the extrudate to produce a carbohydrate matrix powder. The method produces a cereal carbohydrate matrix powder that has a low viscosity, excellent dispersibility, and a strong food flavor.

21: 2023/01218. 22: 2023/01/30. 43: 2023/03/10
51: A01G
71: FUJIAN SANAN SINO-SCIENCE PHOTOBIOTECH CO., LTD
72: WANG, Tingting, LI, Yang
33: CN 31: 202010758468.2 32: 2020-07-31
54: METHOD FOR PROMOTING GROWTH OF ROOT TUBERS OF RHIZOME-TYPE MEDICINAL MATERIALS IN PLANT FACTORIES
00: -
A method for promoting the growth of root tubers of rhizome-type medicinal materials in plant factories. The method comprises: using a specific light source for irradiation during an indoor cultivation process, wherein the spectral composition of the specific light source comprises: the ratio of the number of light quanta of blue light (400-499 nm) to the total number of light quanta is 15-35%, the ratio of the number of light quanta of green light (500-599 nm) to the total number of light quanta is 15-27%, the ratio of the number of light quanta of red light (600-699 nm) to the total number of light quanta is 35-55%, and the ratio of the number of light quanta of far-red light

(700-780 nm) to the total number of light quanta is 0-15%. By means of the method, rhizome-type medicinal materials with a short planting cycle, fast root tuber expansion, and of a high quality can be obtained. Further disclosed is an indoor cultivation method for rhizome-type medicinal materials

---

21: 2023/01243. 22: 2023/01/31. 43: 2023/04/19
51: G06Q
71: MADELEIN VAN DER VYVER
72: Madelein van der Vyver
33: ZA 31: 2022/11272 32: 2022-10-14
54: ANIMAL TRACKING DEVICE
00: -
According to the invention there is provided an animal tracking device which comprises a computer for executing processes and instructions and controlling the components of the device, a communication means for communicating with a global positioning system and a server and a power source for providing the device with electrical power whereby the computer, in association with the communication means, records, processes, transmits and receives information to and from the global positioning system and the server and wherein the power source provides electrical power for a period equal to or greater than the lifespan of the animal

---

21: 2023/01244. 22: 2023/01/31. 43: 2023/03/10
51: A23B
71: Institute of Microbiology, Jiangxi Academy of Sciences
72: HUANG, Guochang, HUANG, Xiaoping, XIONG, Dawei, YUAN, Lin, ZHANG, Shuaiwen, GU, Bintao
54: PREPARATION METHOD AND APPLICATION METHOD FOR CHILLED MEAT PRESERVATIVE
00: -
Provided are a preparation method and application method for a chilled meat preservative. The preparation method includes: 1) preparing a plurality of immobilized yeast reaction columns; 2) making the immobilized yeast reaction columns and an HZ816 macroporous adsorption resin filter column form a circulation loop; 3) making a reaction solution containing L-phenylalanine flow through the immobilized yeast reaction columns for Beta-Phenylethanol conversion reaction, and making the conversion solution directly flow through the resin filter column to adsorb a product in real time without adsorbing a substrate; and 4) washing the HZ816 macroporous adsorption resin filter column with pure water, then eluting the product of the HZ816 macroporous adsorption resin filter column with ethanol, and adjusting a concentration of Beta-phenylethanol in eluent to 3.0-5.0 g/L. The preparation method for a chilled meat preservative is simple, and has a high conversion rate and a wide application prospect.

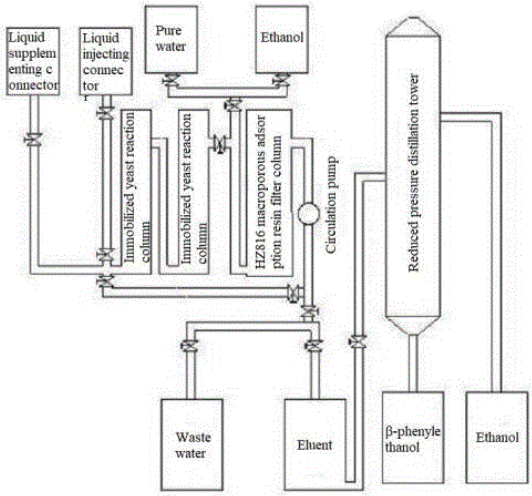

21: 2023/01245. 22: 2023/01/31. 43: 2023/04/25
51: A01K
71: Guangdong Tobacco Research Institute
72: DENG, Haibin, LUO, Fuming, CHEN, Dexin, ZENG, Tao, FAN, Miaomiao, YOU, Ziyi, SUN, Zheng
33: CN 31: 202223384792.6 32: 2022-12-16
54: DEVICE FOR FEEDING RHINOCORIS FUSCIPES WITH VESTIGIAL WING DROSOPHILAS
00: -
Disclosed is a device for feeding Rhinocoris fuscipes with vestigial wing drosophilas. The device includes vestigial wing drosophila reproduction boxes, vestigial wing drosophila culture boxes, a Rhinocoris fuscipes feeding box, a communication pipe, and at least one feed box provided with feed cavities; the vestigial wing drosophila reproduction boxes are provided with reproduction cavities for placing adults of the vestigial wing drosophilas, and the adults lay eggs in the feed cavities in the reproduction cavities; the vestigial wing drosophila culture boxes are provided with culture cavities and escape holes, and blocking components are provided at the escape holes; and the Rhinocoris fuscipes feeding box is

provided with an entrance hole and a feeding cavity. According to the device, the Rhinocoris fuscipes is fed by culturing the vestigial wing drosophilas, and culturing host plants is not need, such that feeding efficiency of the Rhinocoris fuscipes is improved.

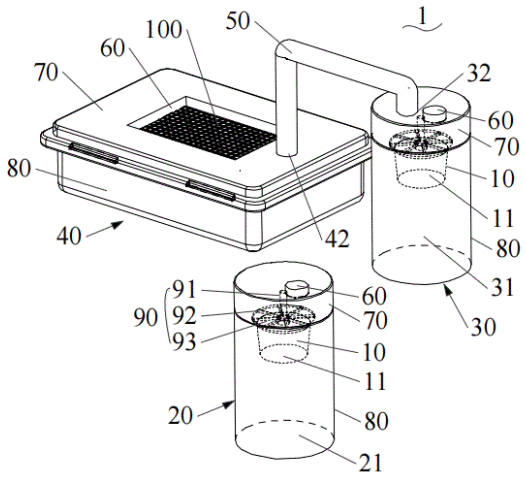

21: 2023/01246. 22: 2023/01/31. 43: 2023/04/19
51: D01H; D02G
71: JIHUA 3542 TEXTILE CO., LTD.
72: ZHENG, Minbo, TANG, Jiandong, MIAO, Xinyun, QIU, Shuanglin, LI, Hongsheng, LI, Mengxiang, DENG, Xiaohong, ZHOU, Yongyou, DENG, Yunlong
54: PROCESS FOR PREPARING ANTIBACTERIAL HIGH COUNT YARN FROM COPPER ION POLYESTER FIBERS AND REGENERATED CELLULOSE FIBERS
00: -
Disclosed is a process for preparing an antibacterial high count yarn from copper ion polyester fibers and regenerated cellulose fibers. The copper ion fibers are polyester - based and have the specification of 1.67 dtex * 38 mm; and the regenerated cellulose fibers are bamboo fibers with the specification of 1.33 dtex * 38 mm. In the present invention, 40 - 60 S high-count compact spun yarns containing 20 - 80 percent of copper ion fibers are produced after premixing, blowing, carding, drawing, roving, spinning and winding of the said raw materials. The characteristics of high strength and lasting antibacterial property of copper ion polyester fibers are maximized. Meanwhile, the characteristics of moisture absorption, sweat releasing, bacteriostasis and deodorization of regenerated cellulose fibers are preferably selected, so that high-count yarns produced are antibacterial and health-care, featuring washing resistance, high strength and good moisture absorption and sweat releasing performance.

21: 2023/01247. 22: 2023/01/31. 43: 2023/04/19
51: H04N
71: Ningbo University
72: GAO, Meixiang, SUN, Jiahuan, JIANG, Yige
54: METHOD FOR REAL-TIME AUTOMATIC MONITORING OF SOIL FAUNA ON GROUND SURFACE
00: -
Provided is a method for real-time automatic monitoring of soil fauna on the ground surface, including the following steps: setting an infrared camera in the field to monitor soil fauna on the ground surface in a real-time manner; placing five lithium batteries in the infrared camera; connecting the infrared camera to a solar panel; the picture pixels of the infrared camera are greater than 36 million, and the infrared camera has a capacity of more than 4G communication function, GPS positioning function and automatic shooting function; and the infrared camera was provided with a memory card. The infrared camera can realize all-weather real-time automatic monitoring of soil fauna on the ground surface, a large amount of clear pictures are obtained, and soil fauna in the field can be monitored in a real-time manner, prompting the automatic, intelligent and digital development of monitoring methods of soil fauna in the field.

21: 2023/01248. 22: 2023/01/31. 43: 2023/04/19
51: A01M
71: Jiangxi Dronephon Technologies Co. Ltd
72: LI, Yuan, WANG, Bin, JIN, Fan
54: AERIAL SPRAYING SYSTEM FOR PESTICIDE
00: -
The present invention discloses an aerial spraying system for pesticide, and relates to the technical field of pesticide spraying. A monitoring device

collects a plurality of crop images of different positions in an area to be sprayed, a processor processes each crop image, determines a crop growth stage and a pest area of the area to be sprayed, so as to determine a reference concentration, and controls a spraying device to prepare spraying liquid medicine having the reference concentration, and when an unmanned aerial vehicle flies above the area to be sprayed, the spraying device sprays the spraying liquid medicine to the area to be sprayed, such that pesticide having a corresponding concentration can be sprayed on the basis of a crop growth condition and a pest situation of the area to be sprayed, so as to achieve accurate spraying.

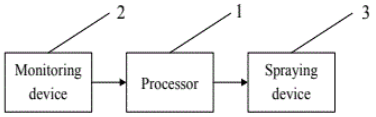

21: 2023/01249. 22: 2023/01/31. 43: 2023/04/19
51: B64D
71: Jiangxi Dronephon Technologies Co. Ltd
72: LI, Yuan, WANG, Bin, JIN, Fan
54: UNMANNED AERIAL VEHICLE FOR SPRAYING PESTICIDE
00: -
Disclosed is an unmanned aerial vehicle for spraying pesticide. The unmanned aerial vehicle includes a body, a support, a support plate, a support mechanism, a liquid supply mechanism, a locking fixing mechanism and a spraying mechanism, where the spraying mechanism includes a vertical pipe, a horizontal spraying pipe, a bidirectional screw, a first nut, a second nut, two stop blocks and a plurality of spray heads; and the liquid supply mechanism includes a chemical liquid tank, a stirring assembly, a first connection pipe, a chemical liquid pump and a second connection pipe, and the locking fixing mechanism is used for locking-fixing the chemical liquid tank on the support. The unmanned aerial vehicle for spraying pesticide can adjust a spraying width to satisfy different use requirements, and the chemical liquid tank can be conveniently disassembled and mounted to be cleaned or replaced.

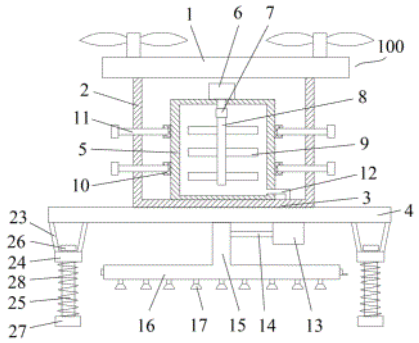

21: 2023/01250. 22: 2023/01/31. 43: 2023/04/19
51: A62B
71: Sias University
72: Jihong WANG, Long ZHANG, Xin QIN, Peng LIU, Kaijie YANG, Junwei BIAN, Jie WANG
33: CN 31: 202223393673.7 32: 2022-12-19
54: HOUSING BUILDING ESCAPE STRUCTURE
00: -
The disclosure is a housing building escape structure, effectively solving the problem of not being able to facilitate the escape of personnel and not guaranteeing safety in the escape, including the wall, wherein a front end of the wall is fixedly connected with a plurality of guardrails, left and right sides of the wall are fixedly connected with a plurality of balconies, a side of each of the plurality of balconies close to the plurality of guardrails is fixedly connected with an arc-shaped protection plate, a middle of each arc-shaped protection plate is opened with an escape opening, an upper end of each escape opening is rotatably connected with an escape door, and a lower end of each the escape door is provided with a limiting mechanism. The disclosure is novel in structure, ingenious in conception, simple and convenient in operation.

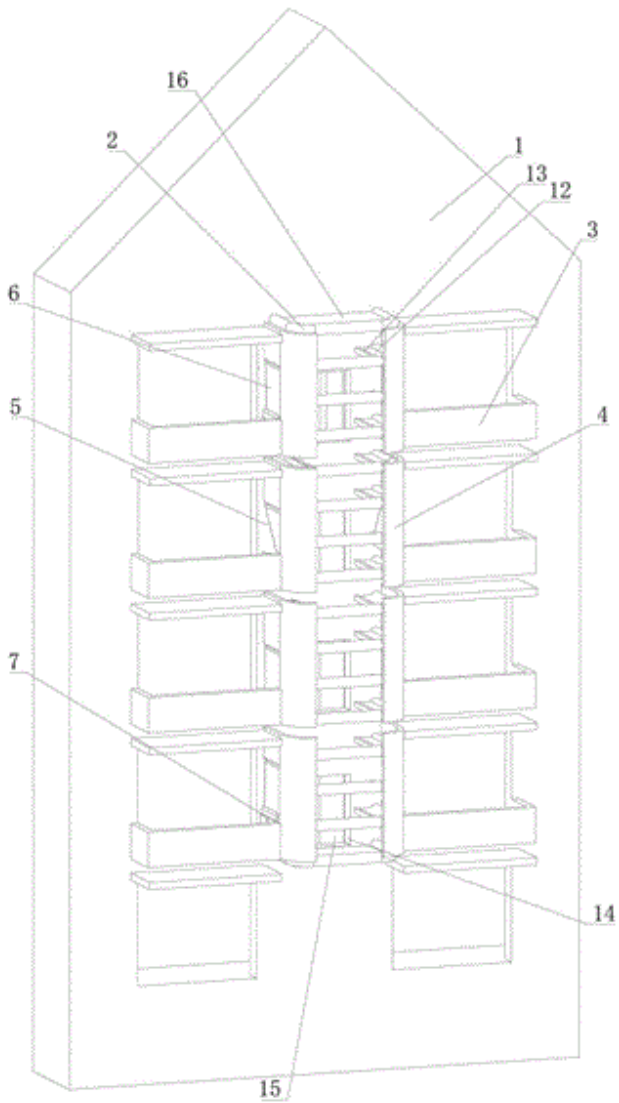

21: 2023/01251. 22: 2023/01/31. 43: 2023/04/19
51: F16N
71: Henan Hongman Taike Technology Co.
72: Keke LI
54: GREASE PUMP FOR EASY BATTERY REPLACEMENT
00: -
The disclosure provides a grease pump for easy battery replacement including a oil tank, a housing at the bottom of the oil tank, a grease injection mechanism in the housing and connected to the oil tank, a drive mechanism in the housing and used to drive the grease injection mechanism, and a battery in the housing and providing power to the drive mechanism. The battery is removably connected to the inner surface of the housing, the drive mechanism drives the grease injection mechanism to work, the grease injection mechanism discharge and injects the grease from the oil tank into the frictional side in need of lubrication; the setting of the driving mechanism and oiling mechanism of the disclosure makes the grease in the oil tank flow out at a set flow rate, which is convenient to control the grease to be injected into the frictional side that needs to be lubricated according to the required cycle; the battery of the disclosure is in the housing, which can be purchased and replaced at any time, with a wide range of use and convenient procurement and replacement; and the oil tank of the disclosure is located right above the housing, which saves the installation space and is convenient to use and install.

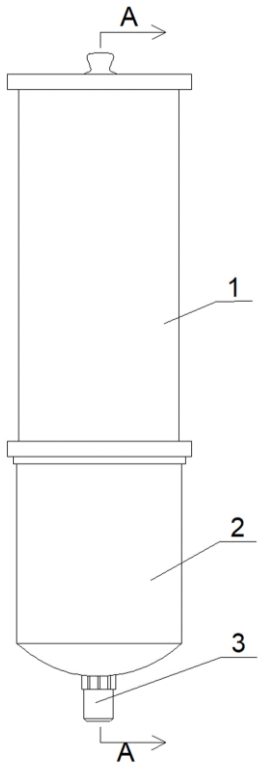

21: 2023/01252. 22: 2023/01/31. 43: 2023/04/19
51: A01K
71: CHEN, Aihua
72: CHEN, Aihua, ZHENG, Yanxuan, SHANG, Guodong, JIANG, Jitao, XUE, Fei, LI, Qiang
54: HEAT PRESERVATION DEVICE FOR AQUACULTURE
00: -
Disclosed is a heat preservation device for aquaculture, mainly including a tank body, a cover body, a temperature control mechanism and a

scraping mechanism, wherein the tank body is of a top open structure, and the cover body is arranged at the top of the tank body; the temperature control mechanism is configured to control the water temperature in the tank body; and the scraping mechanism is configured to scrape dirt from the inner wall of the tank body. Dirt, feces and feed residues in the tank body can be removed by utilizing scrapers, collected in a drain outlet through a slope at the bottom of the tank body, and then discharged through a drain valve. Insulating layers are arranged outside the tank body and the cover body, so that the water temperature in the tank body can be kept effectively, and energy can be saved.

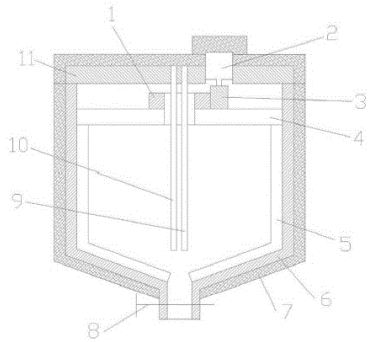

21: 2023/01253. 22: 2023/01/31. 43: 2023/04/19
51: A61G
71: AFFILIATED HOSPITAL OF WEIFANG MEDICAL UNIVERSITY
72: HUO Huixia, LIU Guiling

54: POSTURE FIXING AND CORRECTING PAD FOR THYROID AND BREAST SURGERY

00: -

The invention discloses a posture fixing and correcting pad for thyroid and breast surgery, which comprises a correcting pad main body, wherein the correcting pad main body is provided with an accommodating through hole and an accommodating groove; a neck pad is installed on the correcting pad main body; the neck pad and the accommodating groove are located at two sides of the accommodating through hole respectively; sliding plates are slidably connected in the accommodating through hole and the accommodating groove; an adjusting part for adjusting the position of the sliding plate is installed in the accommodating through hole; a chest limiting plate is installed at the top of the sliding plate located in the accommodating through hole; and a leg limiting plate is installed at the top of the other sliding plate. The invention is simple in structure, convenient to use, avoids turning over patients manually, and increases the convenience of operation.

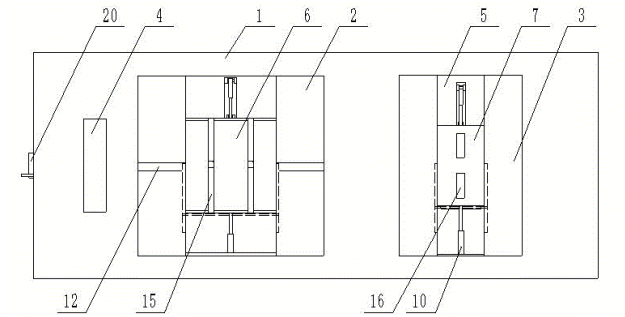

21: 2023/01254. 22: 2023/01/31. 43: 2023/04/25
51: C08K
71: Taiyuan University of Technology
72: Hongwei HE, Chen HAN, Feng GAO

54: PREPARATION OF EPOXY RESIN/SILICON OXIDE NANOCOMPOSITES BY CENTRIFUGAL ASSISTED METHOD MATERIALS

00: -

A method for the preparation of epoxy resin/silicon oxide nanocomposites by centrifugal assisted method belongs to the field of technology for the preparation of new materials and is characterised by a method for the preparation of epoxy resin/silicon oxide nanocomposites based on a centrifugal assisted method. The method involves treating the silicon oxide nanoparticles with an ethanol solution of a coupling agent under the combined effect of strong stirring and ultrasound to obtain the modified silicon oxide nanoparticles. The modified silicon oxide nanoparticles are then added to the already preheated epoxy resin, ultrasonicated followed by centrifugation, and finally true The modified silica nanoparticles are then added to the preheated epoxy resin, sonicated, centrifuged and finally vacuum defoamed and poured into the preheated mould. The mould is heated under vacuum until it is fully cured. Advantages of the invention The existing preparation methods are complicated, the dispersion effect is poor and the mechanical properties of the resulting The advantages of the present invention are: it solves the problems of complex operation, poor dispersion and poor mechanical properties of the composite material. The nano-silicon oxide has good dispersion and no agglomeration. dispersion,

no agglomeration phenomenon; simple process; the prepared composite material The composite material has high mechanical properties.

21: 2023/01255. 22: 2023/01/31. 43: 2023/04/19
51: G09B
71: Jilin Normal University
72: Shulian LI, Nan LI
54: A PSYCHOLOGICAL EDUCATION FOR UNIVERSITY STUDENTS WITH A HIGH MODULATING FUNCTION SANDBOX
00: -
The present invention relates to the field of psychological education technology, in particular to a sand table for psychological education of university students with height moderating function, including a base, a threaded rod, a vertical rod and a sand table, the upper part of the base is provided with a stepping motor, and the upper part of the base is also bolted with a support pillar and a support rod, the support pillar is inserted and fitted to a receiving plate. The upper part of the base is provided with a stepper motor, and the upper part of the base is also bolted with a support column and a support rod, the support column is inserted into a receiving plate, and a support block is clamped between the two said receiving plates, and the upper part of the support block is fixedly glued to a sandbox; the bottom of the support block is bolted with a vertical rod, and the bottom of the vertical rod is welded to a connecting block, and a bearing is fixedly glued in the inner circular hole opened in the connecting block, and a threaded block is fitted in the inner ring of the bearing; the threaded block is connected to the threaded rod, and the operation of the threaded rod is controlled by a stepper motor. Control stepping motor drive the operation of the shaft and belt, in the role of the connection of the vertical rod, will push the support block and the position of the sand table height upward, to play the purpose of the sand table position height adjustment.

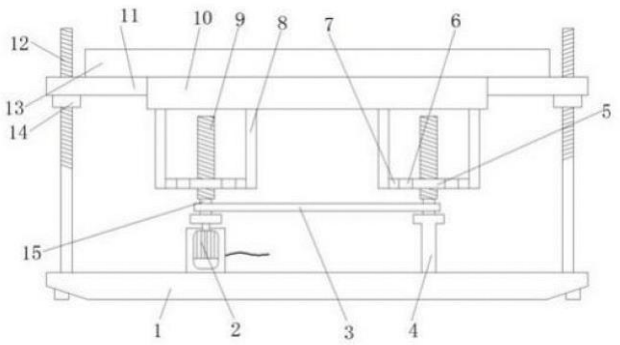

21: 2023/01256. 22: 2023/01/31. 43: 2023/04/19
51: G09B
71: Jilin Normal University
72: Shulian LI
54: A VIRTUAL REALITY TRAINING PSYCHOLOGICAL EDUCATION TEACHING SYSTEM
00: -
The invention relates to the field of virtual training technology, in particular to a virtual reality training psychological education teaching system, which solves the shortcomings of the inconvenience in psychological education training in the existing technology, including the data storage module, which is used for the storage of psychological education training information, as well as the storage of learning users' data and learning progress, and the experience terminal module, which is used for training user terminals. The user conducts training and learning through the experience terminal module. The output end of the data storage module is connected to the input end of the resource call module, and the output end of the resource call module is connected to the control module. The invention flexibly assists psychological education and training workers through virtual reality by setting the data storage module, the resource call module, and the experience terminal module.

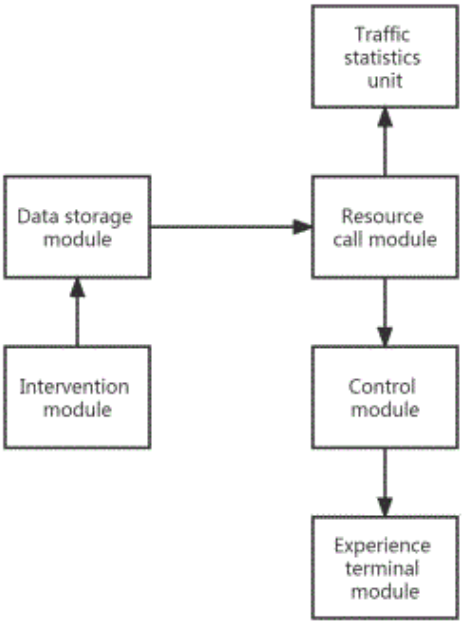

21: 2023/01257. 22: 2023/01/31. 43: 2023/04/19
51: A61K
71: Yanbian University
72: Yan ZHENG, Yanze ZHENG, Rihui LI, Jianpeng GUO, Yuling WANG, along ZUO, Xinyue ZHANG, Xiaoting LI, Cheng LI

54: A COMPOSITION FOR IMPROVING RENAL INSUFFICIENCY, BLACK GINSENG EXTRACT AND ITS PREPARATION METHOD AND APPLICATION

00: -

The invention provides a composition for improving renal insufficiency, belonging to the technical field of deep processing of Panax genseng C.A.Mey. The composition comprises the following raw materials by weight: 2~6 of ginsenoside Rg3, 1~5 of ginsenoside Rg5, 1~3 of ginsenoside Rk1. The composition of the invention participates in delaying the process of chronic renal interstitial fibrosis by inhibiting HK-2 phenotype differentiation, thus improving chronic renal insufficiency. After verification, the product can significantly improve the renal function of patients with chronic renal insufficiency CKD2-3.

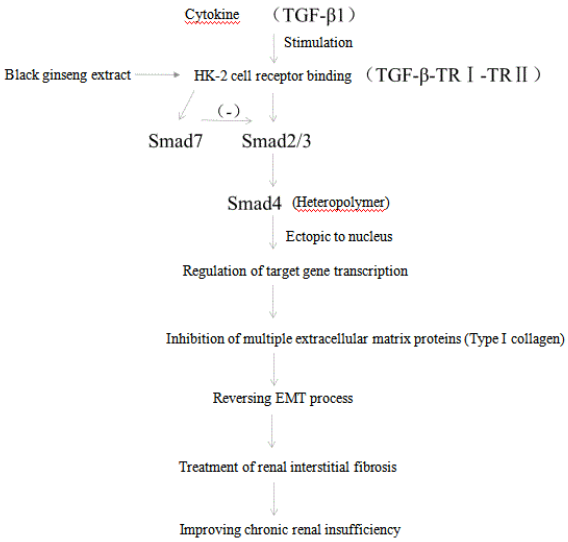

21: 2023/01258. 22: 2023/01/31. 43: 2023/03/10
51: G01N
71: Liupanshui Normal University
72: YIN Yue, ZHU Kun, KANG Shiju, WEN Shan, LI Mingjun, OUYANG Fahong

54: METHOD AND INSTRUMENT FOR MEASURING YOUNG'S MODULUS BY BEAM BENDING METHOD

00: -

The invention relates to the technical field of modulus measuring instruments. And the invention discloses a method and instrument for measuring Young's modulus by beam bending method. The instrument comprises a base, and the top of the base is provided with a measuring mechanism, the top of the base is provided with an observation mechanism located at the front side of the measuring mechanism; And the four corners at the bottom of the base are provided with height-adjustable foot pads; The front of the base is provided with a tension indicator, and the front and both sides of the base are fixedly provided with a levelling instrument. According to the method and the instrument for measuring Young's modulus by beam bending method, a detection plate to be measured passes through a copper frame, two sides of the detection plate are placed on the top of a supporting column, a continuous force is applied to the detection plate through a stretching steel cable, and the pulling force is read in real time, so that the error caused by shaking during the force application process is reduced, and the applied pulling force can be displayed by a display.

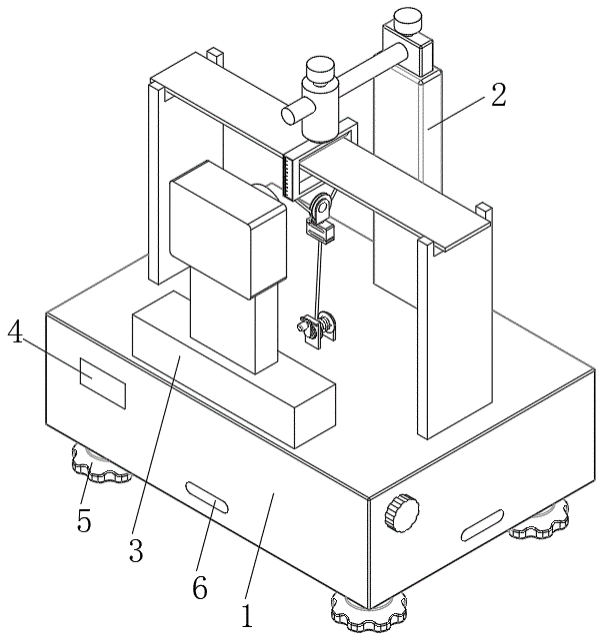

21: 2023/01259. 22: 2023/01/31. 43: 2023/03/10
51: G01B
71: Liupanshui Normal University
72: YIN Yue, KANG Shiju, ZHU Kun, LI Mingjun, WEN Shan, TU Shuang

54: TESTING DEVICE AND ANALYSIS METHOD FOR MAGNETIC DAMPING AND DYNAMIC FRICTION COEFFICIENTS

00: -

The invention discloses a testing device and analysis method for magnetic damping and dynamic friction coefficients, which comprises a bottom plate. And it is characterized in that the upper end of the bottom plate is fixedly connected with a transverse plate, the upper end of the transverse plate is fixedly connected with a slide rail; The inner side of the slide rail is rotatably connected with a guide rail, the upper end of the slide rail is slidably connected with a slide plate, and a rotating rod is rotatably connected between the guide rail and the sliding plate; The inner side of the guide rail is slidably connected with a magnetic slider; One end of the magnetic slider is fixedly connected with a connecting rope, and one end of the connecting rope is fixedly connected with a weight; The rear end of the guide rail is fixedly connected with a connecting plate, the front end of the connecting plate is fixedly connected with a crown block. The invention has the advantages that: the magnetic damping and dynamic friction coefficients of the slider are measured by a constant force traction method, and the experimental phenomenon is analyzed by using tracker software; As long as whether the slider moves at a uniform speed can be accurately judged according to the v-t image of the slider movement, the speed of the slider can also be intuitively calculated.

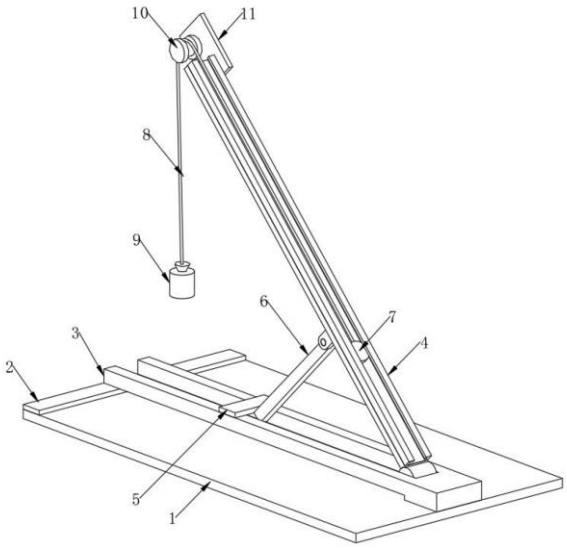

21: 2023/01260. 22: 2023/01/31. 43: 2023/03/10
51: G06K; G06N
71: Xi'an University of Technology
72: LI, Xiuxiu, WU, Shengjun, ZHUO, Wei, LIU, Xufeng, WANG, Chaoxian, WANG, Xiuchao, WANG, Rongchao
33: CN 31: 202210142018.X 32: 2022-02-16

54: METHOD FOR SIMILARITY MEASUREMENT OF HUMAN BODY ACTIONS

00: -

Disclosed is a method for similarity measurement of human body actions, including the following steps: step 1: extracting key action frames and action intervals on a to-be-tested video to obtain a data set; step 2: regularizing the data set using skeleton coordinate information to obtain a skeleton image data set; step 3: building a siamese neural network model; step 4: setting a to-be-tested template T and a reference template R, and performing similarity measurement on single-frame images in the to-be-tested template T and the reference template R using the trained siamese neural network model to obtain dissimilarity of the single-frame images; and step 5: calculating the dissimilarity of the single-

frame images obtained in step 4 using a DTW algorithm to obtain a final similarity measurement result. The method solves the problem that the similarity measurement accuracy is not high in the prior art.

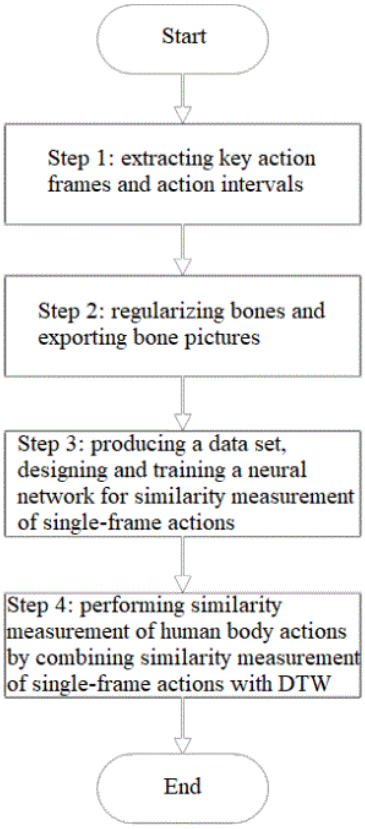

21: 2023/01262. 22: 2023/01/31. 43: 2023/03/10
51: H04L
71: Dr. G. Anand Kumar, Dr. B. Jagadeesh, Dr. B. Rajan, Dr. R.L.V. Renuka Devi, Dr. Binod Kumar Choudhary, Mr. Sumit Kumar Maitra, Dr. Karthik Chinnasamy, Dr. Siva Rama Krishna T., Mr. M. Praveen Kumar, Dr. Ashish Verma
72: Dr. G. Anand Kumar, Dr. B. Jagadeesh, Dr. B. Rajan, Dr. R.L.V. Renuka Devi, Dr. Binod Kumar Choudhary, Mr. Sumit Kumar Maitra, Dr. Karthik Chinnasamy, Dr. Siva Rama Krishna T., Mr. M. Praveen Kumar, Dr. Ashish Verma
54: A SELF-ADJUSTING, DYNAMIC SYSTEM WITH REAL-TIME INTELLIGENCE, MACHINE LEARNING, AND AUTOMATION TO ANALYSE CYBER RISKS IN HARSH SITUATIONS
00: -
The present invention relates to a self-adjusting real-time intelligent system for analysing cyber risks in harsh situations. The system comprises a data collection and pre-processing module communicatively linked to a cloud network and is configured to collect and pre-process real-time data from one or more sources and store in a memory unit. An artificial intelligence and machine learning (AI/ML) module coupled to a processing unit and is configured to analyse the real-time pre-processed data and identify potential cyber risk. An automation module is configured to facilitate suitable actions on the identified potential cyber risk. A real-time intelligence module configured to provide real-time information and alerts to security analysts, allowing the automation module to act quickly in the event of a cyber risk.

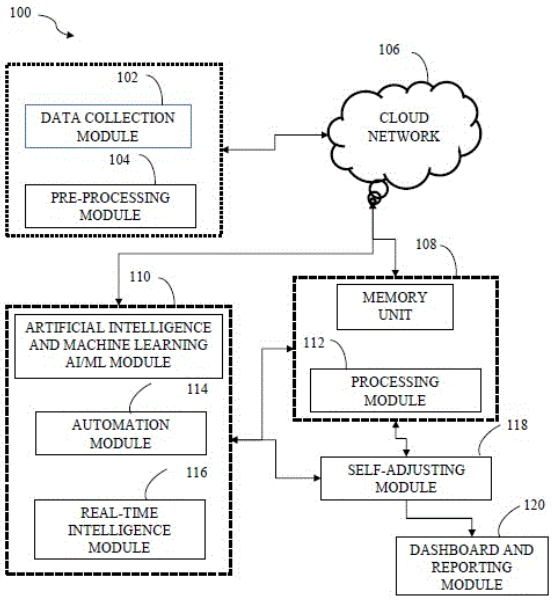

21: 2023/01264. 22: 2023/01/31. 43: 2023/03/10
51: G01V
71: The Third Institute of Qinghai Geological Prospecting
72: WANG Bing, He Shuyue, zhang aikui, Zhang yong, Dai wei, Dong ji en, Liu yongie, Liu zhigang, Mo Shengjuan
54: METHOD FOR SEARCHING FOR OROGENIC GOLD DEPOSITS
00: -
The invention discloses the method for searching for orogenic gold deposits. And the method mainly comprises the following steps: firstly, select an orogenic belt, then process remote sensing images and selecting area according to the selected orogenic belt, use FieldSpec Pro FR spectrometer to measure the spectrum of the known orogenic gold

deposit samples, and compare the known orogenic gold deposit samples with the typical altered mineral model, summarize their mineral assemblage and alteration characteristics; then establish spectral data sets of lithology and surrounding rocks of the known orogenic gold deposits, in addition, use FieldSpec Pro FR spectrometer to carry out on-the-spot spectral measurement in areas favorable for gold mineralization; then identify altered minerals and establish altered mineral zoning spectrum data set; what's more, the AI machine automatically selects prospecting target area of orogenic gold deposits; finally, use trenching to verify the spectrum of the prospecting target area and determine the orogenic gold deposits body. Through hyperspectral remote sensing combined with surface verification, the orogenic gold deposit can be quickly delineated within one year, the work cycle of prospecting and exploration can be greatly shortened, the production cost can be greatly reduced, a lot of manpower and material resources can be saved.

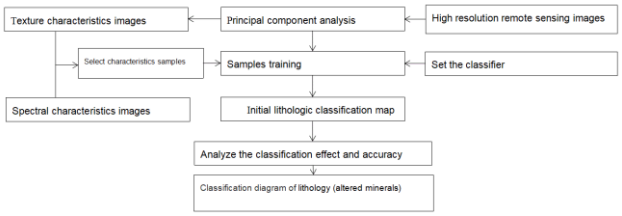

21: 2023/01274. 22: 2023/01/31. 43: 2023/03/10
51: A23N; C12M
71: ANHUI ZHENGDAYUAN FEED GROUP CO., LTD
72: PENG, Cheng, MENG, Linglin, ZHU, Huarong, SHI, Fenglei, WANG, Jiandong
33: CN 31: 202110786952.0 32: 2021-07-13

54: FERMENTATION DEVICE AND METHOD FOR PARTRIDGE CHICKEN FEED PROCESSING PROTEIN ADDITIVE

00: -

A fermentation device and method for a partridge chicken feed processing protein additive. Common feed processing needs fermentation of raw materials, and the raw materials entering the fermentation tank at different time points may cause the fermentation degree of the raw materials inside the fermentation tank to be varied, thereby affecting the finished products. Therefore, a fermentation device is provided, comprising a fermentation cylinder (1), and further comprising: a rotating structure, provided inside the fermentation cylinder (1); and fermentation tanks (27) and partition plates (17), wherein the fermentation tanks (27) are provided on the rotating structure by means of fixed snap-fitting structures; and a feeding structure, provided1 on one side of the fermentation cylinder (1); and a sealing structure, provided at top of the rotating structure; and a cover plate structure, provided on a side wall of the fermentation cylinder (1).

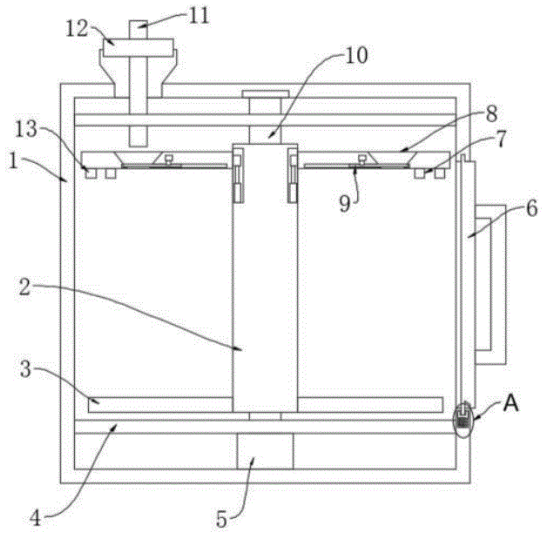

21: 2023/01290. 22: 2023/02/01. 43: 2023/04/19
51: G01N
71: China University of Geosciences, Beijing
72: WEI Siyuan, JIANG Zaixing, XUE Xinyu, HU Guangming, LIU Zhongbao
33: CN 31: 202310012792.3 32: 2023-01-05

54: EXPERIMENTAL RESEARCH METHOD OF INTEGRATION OF DEPOSITION PHYSICAL SIMULATION AND DEPOSITION NUMERICAL SIMULATION BASED ON SOURCE-SINK SYSTEM

00: -

The invention belongs to the field of sediment simulation and is particularly described an experimental research method of integration of deposition physical simulation and deposition numerical simulation based on source-sink system. The experiment applies geological data of a study area to complete multiple times of physical simulation and numerical simulation experiments. In the experiment process, high-precision forward experiments with different scales are completed through continuous analysis and correction of

experimental data. Finally, experiment result meeting the geological conditions of the study area are obtained. The experimental research method of the invention realizes the visualization of deposition phenomenon through physical simulation. Moreover, the visualization of quantitative parameters is realized by numerical simulation. The experiment results are diversified, and the scope of the study area is more complete, which can predict the sand body distribution analysis and sand body superposition style.

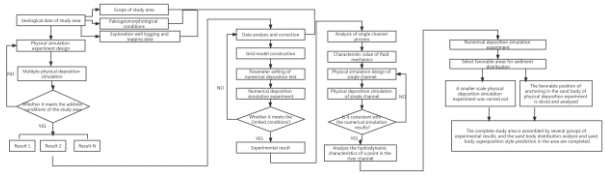

21: 2023/01291. 22: 2023/02/01. 43: 2023/04/19
51: E04B
71: Lu 'an Hengwei Sign Co., LTD
72: Weiwei Zhang
54: SPLICED NON-LOAD-BEARING BUILDING WALLS
00: -
The invention discloses a splicing type non-bearing building wall, which comprises a lower fixed track, an upper fixed track, a wall panel and a connecting component. The upper fixed track and the lower fixed track are horizontal arranged rectangular plate structure, and the upper fixed track is fixed on the ceiling and the lower fixed track is fixed on the ground. And the lower end face of the upper fixed track is provided with a sliding bulge, the upper end face of the lower fixed track is provided with a sliding bulge, the wall board is a vertical arrangement of the moment plate structure, the top of the wall board is provided with a sliding groove, the bottom of the wall board is provided with a sliding groove, the wall board is arranged along the length of the upper/lower fixed track the extension direction array is provided with a number of groups and the adjacent two groups of wall panels are connected by connecting components, The gap between the adjacent two groups of wallboard is provided with a covering board, covering board along its length direction of the two sides are provided with a mounting slot and the installation slot is provided with a mounting component, covering board through the installation component clamp is arranged in the gap between the adjacent two groups of wallboard.

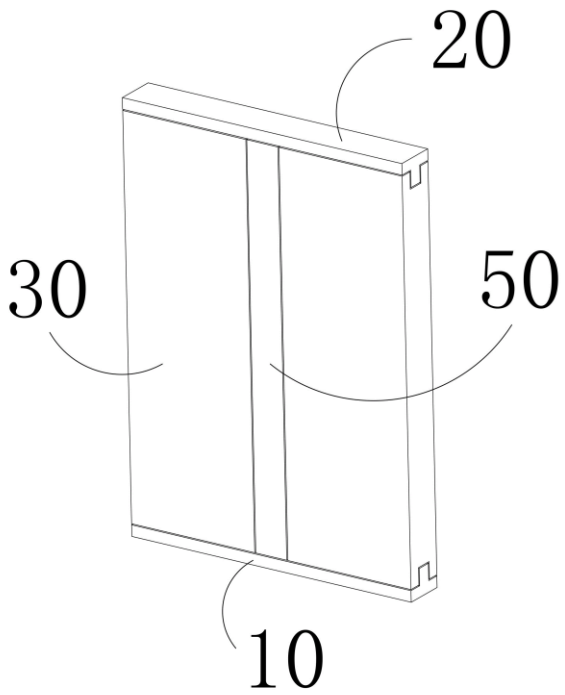

21: 2023/01292. 22: 2023/02/01. 43: 2023/04/19
51: E04G
71: Lu 'an Hengwei Sign Co., LTD
72: Weiwei Zhang
54: SPLICED BUILDING TEMPLATE FRAME
00: -
The invention discloses a splicing type building formwork frame, which comprises a building formwork, a connecting component and a lower fixing component. The connecting component is used to connect two adjacent groups of building formwork, and the lower fixing component is used to fix the building formwork on the ground. The two groups of large faces parallel to the length direction of the building formwork are installation face and smooth face respectively. The two groups of sides of the building template parallel to its own width direction are respectively connecting surface and clamping surface. The connecting surface of the building template is provided with a threaded hole, and the clamping surface of the building template is provided with a connecting groove, which is located at the same horizontal height with the threaded hole, and the part of the building template mounting surface near the threaded hole is provided with a

threaded hole. Thread hole two and thread hole is located at the same horizontal height, the part of the building template installation surface near the connecting groove is provided with a connecting groove two, the shape structure of the connecting groove two is consistent with the shape structure of the connecting groove one, the connecting groove two and the connecting groove one is located at the same horizontal height.

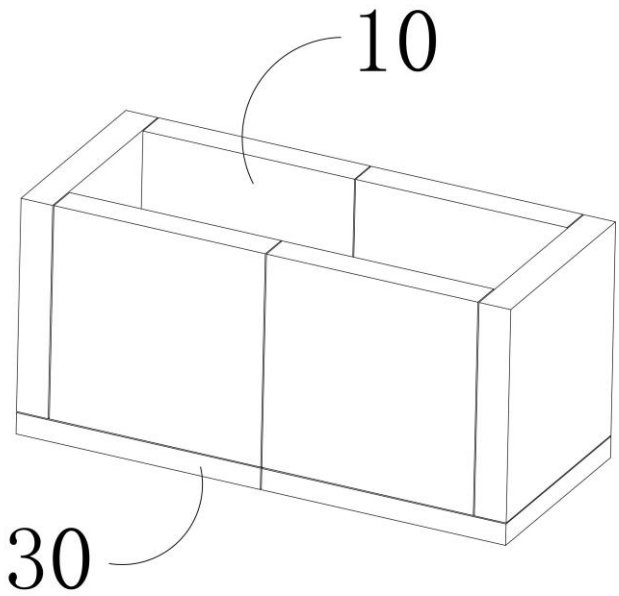

21: 2023/01293. 22: 2023/02/01. 43: 2023/04/19
51: B28C
71: Lu 'an Hengwei Sign Co., LTD
72: Weiwei Zhang
54: AUTOMATIC DUMPING CEMENT MIXING EQUIPMENT
00: -
The invention discloses an automatic dumping cement mixing device, which comprises a mounting frame body fixed on the ground, The mounting frame body is installed with a mixing tank, an mixing member used to stir the cement raw materials in the mixing tank, a driving member used to drive the mixing tank to rotate around its axis in the opposite direction of the mixing member, a tipping member used to drive the mixing tank to tilt 90 degrees to the ground and dump the cement out, and a mounting shaft is horizontally movable on the mounting frame body. The installation shaft is provided with two groups and the installation ring is fixed vertically between the two groups of installation shaft, the mixing tank is installed in the installation ring coaxial movement through the bearing, the upper end of the installation ring is provided with a fixed bracket and the mixing member is installed on the fixed bracket. The upper open end of the mixing tank is provided with a tipping nozzle and the tipping nozzle is used to guide the cement to fall down when the tipping member drives the mixing tank to be arranged in an inclined way and pours cement.

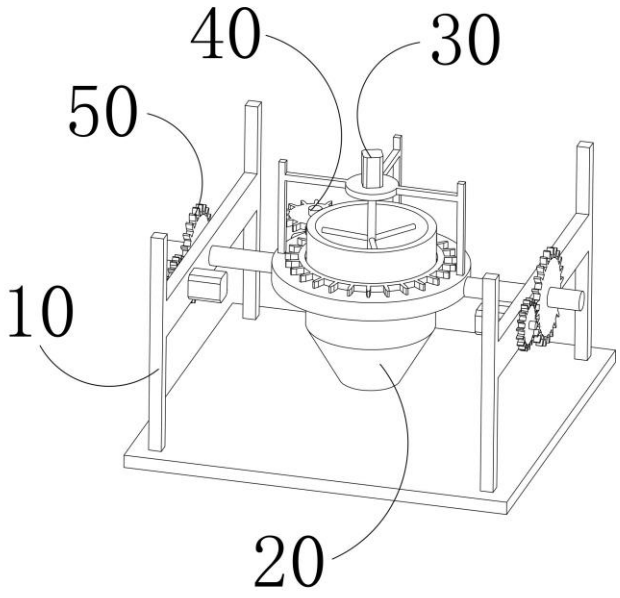

21: 2023/01294. 22: 2023/02/01. 43: 2023/04/19
51: B07B
71: Lu 'an Hengwei Sign Co., LTD
72: Weiwei Zhang
54: SAND AUTOMATIC SCREENING DEVICE
00: -
The invention discloses a sand automatic screening device, which comprises a support body fixed on the ground, a raw material conveying member and a sand screening member are arranged on the support body, a raw material conveying member is used for continuously conveying sand raw materials to a sand screening member, a sand screening member is used for filtering and screening sand raw materials, a raw material conveying member comprises a conveying shell, Conveying shell along the direction perpendicular to the ground can be divided into two parts and are respectively cylindrical segment, cylindrical segment is vertical arrangement and the upper and lower ends of the opening of the cylindrical shell structure and the cylinder segment is

fixed on the support body, circular segment is the upper and lower ends of the opening and the diameter of the opening end is greater than the diameter of the lower end of the opening of the circular shell structure. The open end of the round table segment is fixed between the open end of the cylindrical segment and the open end of the coaxial connection, the open end of the round table segment is provided with a coaxial conveying pipe, sand screening member is arranged in the raw material conveying member below.

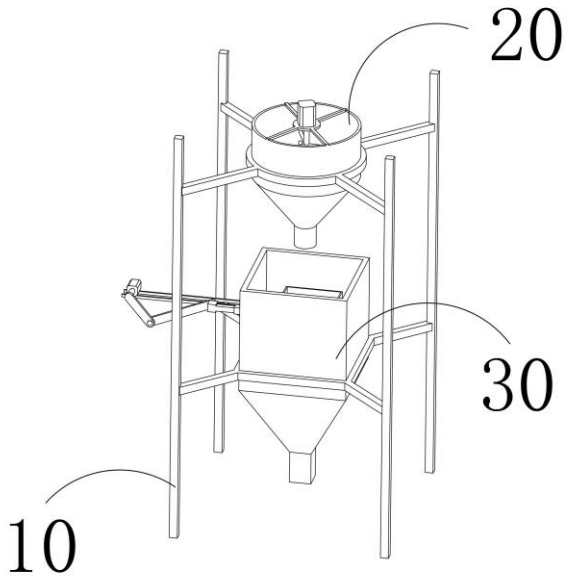

21: 2023/01295. 22: 2023/02/01. 43: 2023/04/19
51: E04G
71: Lu 'an Hengwei Sign Co., LTD
72: Weiwei Zhang
54: SPLICE BUILDING TEMPLATE
00: -
The invention provides a splicing type building template, which comprises a square plate body, and four rectangular accommodating slots are provided on the upper end face of the plate body, a port is formed between the accommodating slot and the end face of the plate body, and a rectangular shielding slide plate is arranged at the slot of the accommodating slot and inserted into the sliding slot, and a part of a connecting piece is arranged in the two accommodating slots arranged opposite. The connector comprises a stud arranged in the accommodating groove and is fixed connected with the bottom of the groove, and is provided with two and the axial direction is arranged along the depth of the accommodating groove, the stud is arranged near the port, is arranged in one of the accommodating groove of the two accommodating groove is arranged in the activity of two connecting rod is arranged on the stud, and the connecting rod is arranged at the bottom of the accommodating groove in the initial state away from the port. When the end faces of the two plates are aligned and spliced, the connecting rod can be rotated to be connected to the stud of the other plate body by 80 degrees, and the stud is provided with a nut.

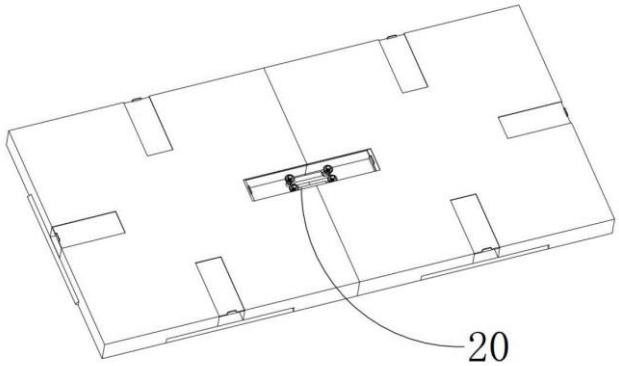

21: 2023/01296. 22: 2023/02/01. 43: 2023/04/19
51: B21F
71: Lu 'an Hengwei Sign Co., LTD
72: Weiwei Zhang
54: SMALL AUTOMATED REBAR CUTTING EQUIPMENT
00: -
The invention discloses a small automatic steel bar cutting device, which comprises a mounting component, a moving component and a cutting component. The moving component is used to clamp the steel bar and pull the steel bar forward to meet the required cutting length. The cutting component is used to cut off the steel bar. The support plate is fixedly connected with the base, a sliding member is arranged between the baffle and the base and the baffle is installed on the base through the sliding member, a bolt fastener is arranged between the base and the baffle, and the two are mounted detachable through the bolt fastener. The baffle is also provided with a sensor for sensing whether the steel bar contacts with the baffle and transmits the signal to the moving component and cutting component. The moving component is arranged between the support plate

one/two, and the cutting component is arranged between the support plate two and the baffle.

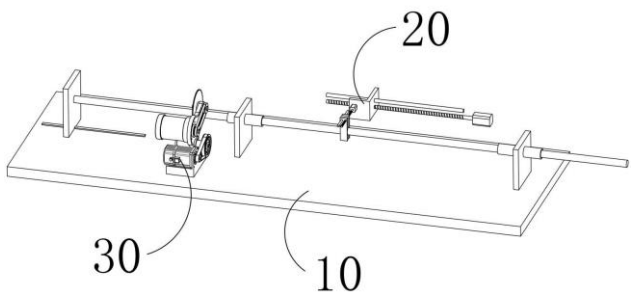

21: 2023/01297. 22: 2023/02/01. 43: 2023/04/19
51: G05B
71: Zhejiang International Maritime College
72: Feijun Guo
54: AN INTELLIGENT REMOTE MONITORING AND DIAGNOSIS SYSTEM FOR AGRICULTURAL GREENHOUSES
00: -
An intelligent remote monitoring and diagnosis system for agricultural greenhouses, comprising environmental data acquisition modules, a power supply module, an exhaust fan unit, a computer monitoring host and a signal conversion module. Its advantage is that it can be applied to the environment monitoring of agricultural greenhouses, can monitor the temperature and gas concentration of agricultural greenhouses, can give an alarm within the specified range and automatically open the exhaust devices. It has strong flexibility, expansion and innovation, easy operation and use, good safety monitoring effect, fast reaction rate of temperature and gas concentration collection, and is extremely economical and environmentally friendly, it can be widely used in remote monitoring of agricultural greenhouses. It can provide a scientific basis for automatic monitoring, automatic control and intelligent management of agricultural ecological information.

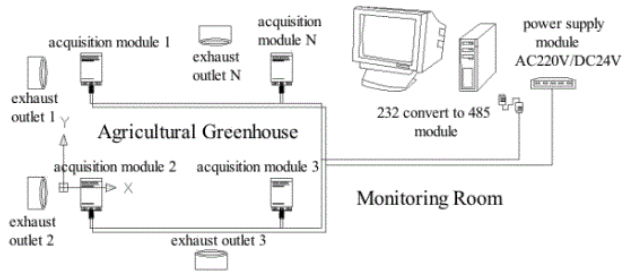

21: 2023/01298. 22: 2023/02/01. 43: 2023/04/19
51: G06Q
71: Chinese Academy of Surveying and Mapping
72: MA, Weijun, LU, Wenjuan, CHENG, Yao, MAO, Xi, WANG, Jizhou, GAO, Wujun, LIU, Aiguo
54: METHOD FOR DETERMINING SPATIAL DISTRIBUTION OF CARBON EMISSIONS
00: -
Disclosed is a method for determining a spatial distribution of carbon emissions. The method includes: on the basis of a point type carbon source computation model, determining carbon emissions of industrial and mining enterprises in a research area; on the basis of a plane type carbon source computation model, determining carbon emissions of resident living consumption in the research area; on the basis of a line type carbon source computation model, determining carbon emissions of traffic lines in the research area; and on the basis of the carbon emissions of the industrial and mining enterprises, resident living areas and the traffic lines in the research area, determining a spatial distribution of the carbon emissions of the research area. The present invention determines the carbon emissions of the industrial and mining enterprises, the resident living consumption and the traffic lines in the research area, and has strong applicability.

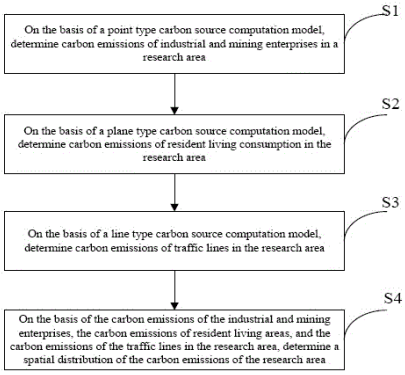

21: 2023/01299. 22: 2023/02/01. 43: 2023/04/19
51: E01D
71: Jinggangshan University
72: WANG, Zhenwu, LIAO, Xiaoling
33: CN 31: 202210210623.6 32: 2022-03-04

54: SUPPORT CARRIER FOR CIVIL ENGINEERING BRIDGE CONSTRUCTION

00: -

The present invention relates to a support carrier, and more particularly, to a support carrier for civil engineering bridge construction. The present invention provides a support carrier for civil engineering bridge construction with a long service life and high security. A support carrier for civil engineering bridge construction includes a connection frame; placing cases symmetrically connected at the bottom of the connection frame; a support plate slidably connected to and between the interiors of the two placing cases; a heightening mechanism provided at the bottom of the connection frame; a push-back mechanism connected between the connection frame and the placing cases. The present invention achieves the purpose of adjusting the height of the support plate by providing stacking plates that first push plates may push from discharge ports and feed ports into the placing cases, thereby realizing a high stability, long service life, and high security.

(Figure 1)

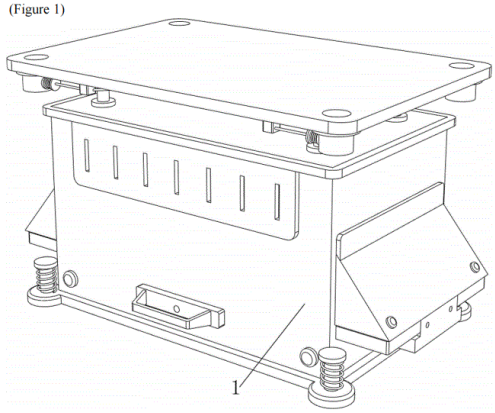

21: 2023/01300. 22: 2023/02/01. 43: 2023/04/24
51: B02C
71: Jinggangshan University
72: WANG, Zhenwu, LIAO, Xiaoling
33: CN 31: 202210236165.3 32: 2022-03-11

54: ENVIRONMENT-FRIENDLY CONSTRUCTION WASTE TREATMENT DEVICE FOR CIVIL ENGINEERING

00: -

An environment-friendly construction waste treatment device for civil engineering includes a main frame, a chopping frame, first fixing columns, a second fixing column, and a motor, etc. Both front and back of the left upper side of the main frame are provided with a first fixing column. The chopping frame configured to treat construction waste is arranged between the first fixing columns. The back of the left upper side of the main frame is provided with the second fixing column. The motor is arranged on the second fixing column. When the motor starts, the chopping wheels chop the construction waste, and the chopped waste falls onto the conveyor belt and moves to the filter plate. In this way, the waste is conveyed via the conveyor belt so as to prevent the device from clogging.

(Figure 1)

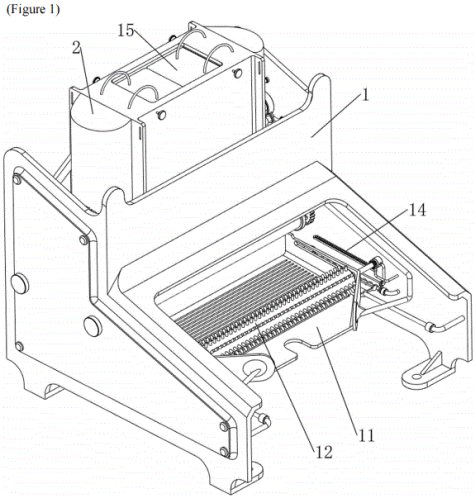

21: 2023/01301. 22: 2023/02/01. 43: 2023/04/19
51: B22F
71: Harbin Institute of Technology
72: YU, Guangbin, LU, Yanling, SUN, Yongguo, CHENG, Xu, YUE, Daxun, YE, Liang

54: ATMOSPHERE PROTECTION SYSTEM FOR LASER ADDITIVE MANUFACTURING AND LASER ADDITIVE MANUFACTURING EQUIPMENT

00: -

Provided are an atmosphere protection system for laser additive manufacturing and laser additive manufacturing equipment. The system includes a box body (1). A door plate (13) is mounted on a front side of the box body via hinges. A rubber sealing ring is arranged between the door plate and the box body. A lower annular pipe (3) is disposed fixedly at a bottom end of an inner wall of the box body. First through holes are evenly distributed on a top face of the lower annular pipe. One end of the lower annular pipe is connected to an inlet end of a vacuum pump (2), and the other end of the lower annular pipe is connected to an air inlet of a cyclone separator (6) via a first connecting tube (5). The present invention applies to the field of laser additive manufacturing.

(Figure 1)

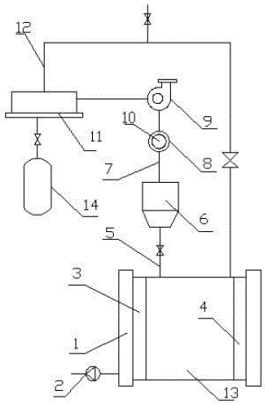

21: 2023/01302. 22: 2023/02/01. 43: 2023/04/19
51: G01N
71: Liupanshui Normal University
72: YIN Yue, KANG Shiju, ZHU Kun, WEN Shan, LI Mingjun, ZHANG Yuncheng

54: EXPERIMENTAL INSTRUMENT FOR MEASURING THE SURFACE TENSION COEFFICIENT OF LIQUID AND ITS MEASURING METHOD

00: -

The invention discloses an experimental instrument for measuring the surface tension coefficient of liquid and its measuring method, which belongs to the technical field of tension coefficient tests. And it comprises a packaging shell, a bracket, an HX711 pressure sensor, a control main board, a display module and a lifting platform; Wherein the bracket and the lifting platform are both arranged on the packaging shell, the HX711 pressure sensor is arranged on the bracket, and the HX711 pressure sensor is located right above the lifting platform; The display module is arranged on one side of the packaging shell, and the display module is electrically connected with the HX711 pressure sensor; The control main board is arranged in the packaging shell, and the packaging shell is provided with a button; The button is electrically connected with the control main board, and the control main board is electrically connected with the lifting platform. According to the invention, the HX711 pressure sensor is arranged, which has the characteristics of small measuring range, high precision and stable output, low use cost and simple operation.

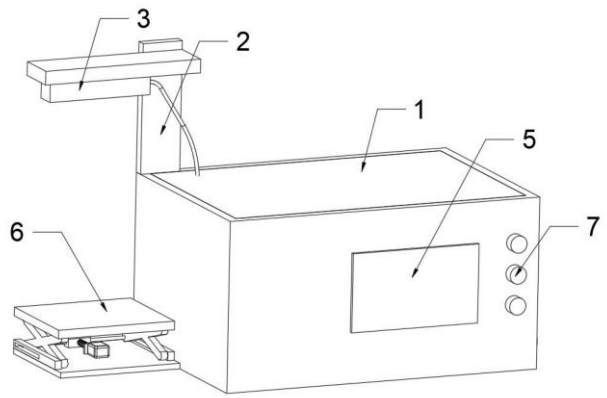

21: 2023/01303. 22: 2023/02/01. 43: 2023/04/19
51: A23N; B01F
71: Bright (Hangzhou) Feed Sci-tech Co., Ltd.
72: XU, Qiuwen, XU, Yingying, XU, Jian, DING, Jinbao, LOU, Lingling, JIN, Miaoren, YU, Xiaoying
33: CN 31: 202210804863.9 32: 2022-07-08
54: FEED PRODUCTION EQUIPMENT AND METHOD
00: -
Disclosed is a feed production equipment and method, including a case, where two stirring rollers are rotationally connected to an interior of the case, a side wall of the case is provided with a first motor for driving the stirring rollers to rotate, an additive feeding port is formed on the top of the case and a powder feeding port is formed on the side wall of the case, a material scattering mechanism is rotationally connected to an interior of the case, a dosing mechanism is arranged at the top of the case corresponding to the position above the additive feeding port, and a discharging mechanism is arranged at the bottom of the case corresponding to the position of a discharging port.

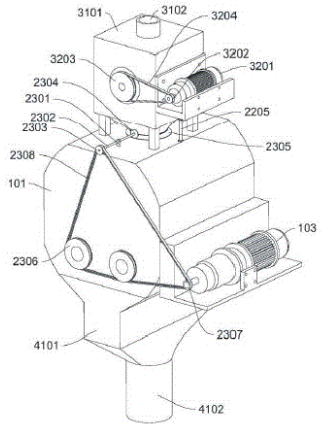

21: 2023/01304. 22: 2023/02/01. 43: 2023/04/19
51: B01D
71: Zhejiang Academy of Agricultural Sciences
72: Zheng Ni, Cun Zhang, Tao Yun, Liu Chen, Weicheng Ye, Jionggang Hua, Yinchu Zhu
54: AN INTELLIGENT IONIZATION PURIFICATION AND DUST-REMOVAL EQUIPMENT FOR LIVESTOCK AND POULTRY HOUSING
00: -
The invention relates to the technical field of livestock and poultry breeding, in particular to an intelligent ionization purification and dust-removal equipment for livestock and poultry houses. The invention comprises an air purification dust collecting ionization box, and one end of the air purification dust collecting ionization box is provided with a connecting frame. The inner ring surface of the connecting frame is fixed with a retaining ring, and the slot of the connecting frame is movable inserted with a ventilation mesh plate. A lifting cleaning part is installed inside the ventilation mesh plate, and a pull-out locking mechanism is arranged between the ventilation mesh plate and the connecting frame;
The beneficial effect of the invention is that the intelligent ionization purification and dust-removal equipment for livestock and poultry houses adopts a pull-out locking mechanism to complete the connection and fixing of the connecting frame and the ventilation mesh plate. The operation of the pull-out locking mechanism is simple and quick, and the loading and unloading efficiency of the ventilation mesh plate is improved. The lifting cleaning part is installed inside the ventilation mesh plate, and the pulling pull-out locking mechanism can clean the openings on the surface of the ventilation mesh plate.

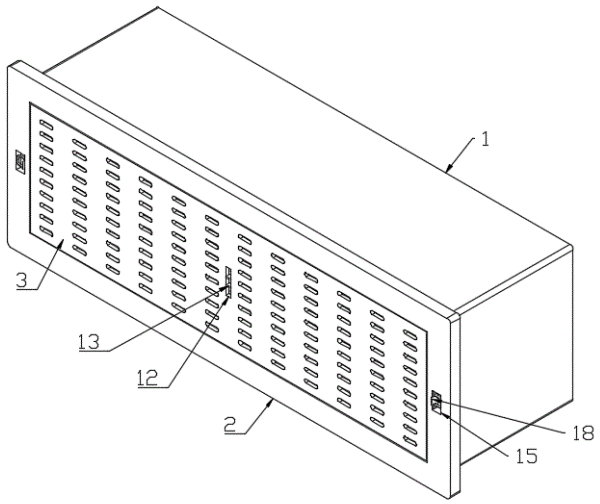

21: 2023/01305. 22: 2023/02/01. 43: 2023/04/19
51: A01N
71: Zhejiang University
72: Rao Jinpeng, Tian Shen, Qiu Feng, Feng Chun, Jin Fan, Jin Min

54: CLOSED CARRIER FOR HUMAN EMBRYO RAPID FREEZING

00: -

The utility model discloses a closed carrier for human embryo rapid freezing. The carrier device comprises an inner carrier rod and an outer sleeve, wherein the inner loading rod comprises a rod body and a slide for loading embryos; The rod body is made of silver; The rear end of the inner carrier rod is provided with a handle part, and the handle part and the inner carrier rod are detachably connected through a connecting part; An accommodating cavity for accommodating the inner carrier rod is arranged in the outer sleeve, the length of the accommodating cavity is longer than that of the inner carrier rod, the rear end of the outer sleeve is provided with an opening for the inner carrier rod to enter the accommodating cavity; And the opening is communicated with the accommodating cavity, and the opening seals the inner carrier rod and the slide in the accommodating cavity through sealant. According to the utility model, the accommodating cavity which can completely accommodate the inner carrier rod is arranged in the outer envelope. And the opening of the accommodating cavity is sealed by the sealant without heating. Therefore, the separation of the rod and sleeve and the partial expansion of the outer sleeve in the prior art will not occur, and the sealing performance is reliable. Thus, this utility model effectively solves the technical problem of unreliable sealing of the closed carrier in the prior art.

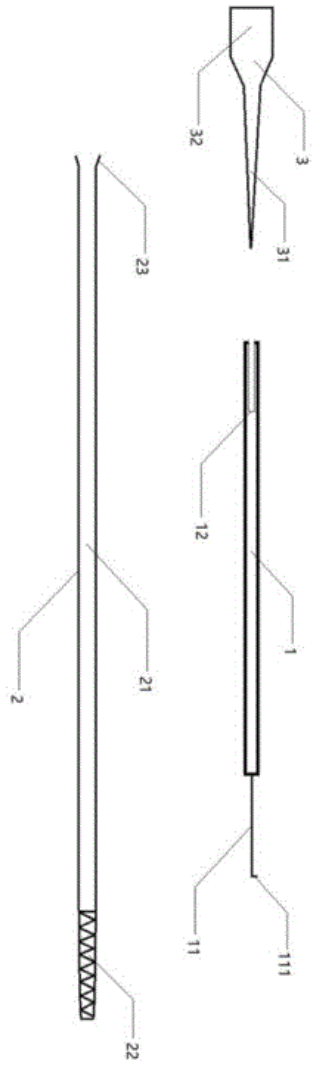

21: 2023/01306. 22: 2023/02/01. 43: 2023/04/19
51: A61K
71: Dr. Krishana Kumar Sharma, Samaresh Pal Roy, Dr. Rajnandini Singha, Dr. Midhun Mathew Kizhakethil, Sruthi Nair, Dr. Maheshwari Vengat, Dr. Hari Narayanan, Dr. Amirtha Tom, Dr. Haritha S. Nath, Dr. Liz Mathew
72: Dr. Krishana Kumar Sharma, Samaresh Pal Roy, Dr. Rajnandini Singha, Dr. Midhun Mathew Kizhakethil, Sruthi Nair, Dr. Maheshwari Vengat, Dr. Hari Narayanan, Dr. Amirtha Tom, Dr. Haritha S. Nath, Dr. Liz Mathew

54: A SYSTEM FOR PREPARING IPOMOEA PES-CAPRAE EXTRACT AND TREATING MELANOMA CANCER

00: -
The system comprises a Soxhlet for treating 100 g powdered material with petroleum ether followed by methanol thereby treating marc with lukewarm water for 24 h; a filter paper for filtering the solution with filter paper to prepare the aqueous extract thereby recovering the solvent from respective extracts at low temperature under reduced pressure; a mixture cum grinder for grinding fresh plant material and staining the paste with thick cotton cloth thereby keeping the extract overnight for sedimentation and decanting thereby drying at room temperature to get the I. pes-caprae extract (IPCE); a treatment device for treating at least two groups of subjects upon injecting 25 and 50 mg/kg I. pes-caprae extract (IPCE) respectively daily up to 40 days; and an analysis unit for concentration of malondialdehyde in the liver cell homogenate of each subject by treating 0.2 mL of cell homogenate with acetic acid, sodium dodecyl sulfate and TBA.

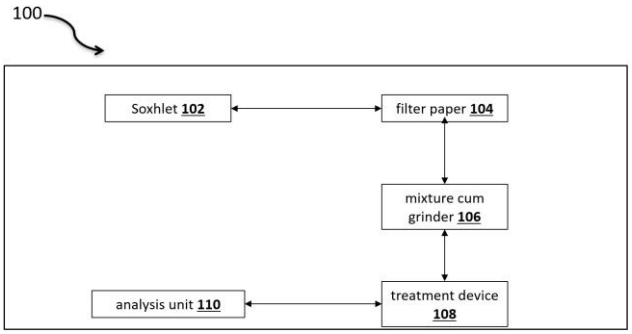

21: 2023/01307. 22: 2023/02/01. 43: 2023/04/19
51: C07K
71: Yashwant Kumar Rao
72: Yashwant Kumar Rao, Alok Raghav, Tanu Midha, Roshan Jacob

54: A METHOD FOR EVALUATING THE EFFICACY OF INDIGENOUS THERAPEUTIC FOOD IN MANAGING THE SEVERE ACUTE MALNUTRITION WITHOUT COMPLICATIONS

00: -
The present disclosure relates to a method for evaluating the efficacy of indigenous therapeutic food in managing the severe acute malnutrition without complication. In the present disclosure, a evaluating study at community level is carried out that determine the efficacy and safety of the prepared indigenous therapeutic food called AMRIT in the management of severe acute malnutrition without complications in children. For performing the study, various children are selected and then administrate with the prepared food and monitored every month for approximately 25 months. To evaluate the growth of the children, baseline anthropometric measurements and clinical examination are done. The obtained data are then analysed using software, and finally the results revealed significant improvement in growth parameters, and children has improved in terms of weight, height and MUAC.

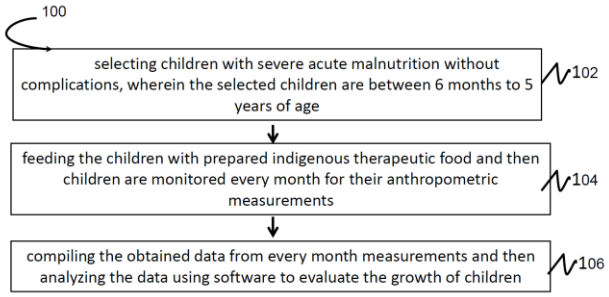

21: 2023/01308. 22: 2023/02/01. 43: 2023/04/19
51: C12N
71: Dr. Ashish Manigauha, Dr. Farhad F Mehta, Dr. Harish Shah, Neha Singh, Rabia Aqeel, Raj Kumar
72: Dr. Ashish Manigauha, Dr. Farhad F Mehta, Dr. Harish Shah, Neha Singh, Rabia Aqeel, Raj Kumar

54: AN IPOMOEA PES-CAPRAE EXTRACT COMPOSITION FOR TREATMENT OF MELANOMA CANCER AND ITS PREPARATION METHOD THEREOF

00: -
The present invention generally relates to a process for Ipomoea pes-Caprae extract for treatment of melanoma cancer comprises collecting powder extract of Ipomoea pes-Caprae plant; mixing 50-150 grams powdered material with petroleum ether followed by methanol in a Soxhlet; treating marc with lukewarm water for 24 h and then filtering it with filter paper to prepare the aqueous extract; recovering the solvent from respective extracts at low temperature (<40°C) under reduced pressure; grinding fresh plant material in a mixture cum grinder and staining the paste with thick cotton cloth; and keeping the extract overnight for sedimentation and decanting thereby drying at room temperature to get the swaras.

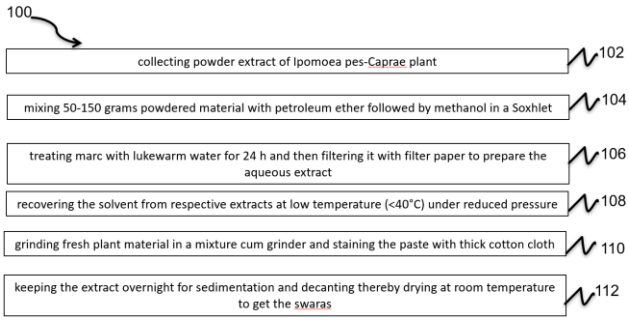

21: 2023/01415. 22: 2023/02/03. 43: 2023/04/03
51: B03C
71: KUNMING UNIVERSITY OF SCIENCE AND TECHNOLOGY
72: CAO, QIN BO, LI, YAN JUN, HU, FA LIN, YAN, WEN CHAO
33: CN 31: 202220419386.X 32: 2022-02-28

54: STRONG MAGNETIC SEPARATOR DEVICE WITH ULTRASONIC WAVE

00: -

The utility model discloses a strong magnetic separator device with ultrasonic wave, comprising a magnetic separator device body and an operation box; the magnetic separator device body comprises an ore feeding tank, a hopper, a concentrate bucket, a tailings bucket and a rotating ring; an input end of the hopper is connected with the ore feeding tank, and an output end is connected with the concentrate bucket and the tailings bucket respectively; the rotating ring is vertically arranged in the hopper and half is immersed in pulp; a magnetic medium is installed in a medium chamber of the rotating ring; an outer side wall of the rotating ring is provided with an ultrasonic transducer; the ultrasonic transducer is arranged close to the magnetic medium; a top end of the rotating ring is provided with an unloading water pipe; and the operation box is electrically connected with the magnetic separator device body. The utility model combines the magnetic medium with the ultrasonic transducer, and uses the vibration and cavitation generated by ultrasonic wave to produce a large number of micro jets, so as to prevent the magnetic agglomeration of the minerals in a magnetic field, achieve the effect of the concentrate for online cleaning of slurry, reduce the slurry content in the minerals and improve the recovery rate and grade of the concentrate.

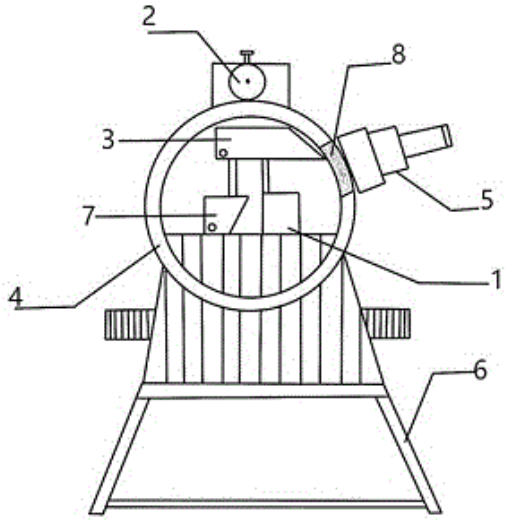

21: 2023/01416. 22: 2023/02/03. 43: 2023/04/03
51: G01N
71: KUNMING METALLURGY COLLEGE
72: LONG, JIAN, YAN, DAO, PING, PAN, HE, CHANG, SONG, WU, TING, LI JING, YONG, CHENG, JU, JIA FU, WEI, WU
33: CN 31: 202210118145.6 32: 2022-02-08

54: GROOVING SAMPLING DEVICE FOR GEOLOGICAL TUNNELS

00: -

The present invention discloses a grooving sampling device for geological tunnels, comprising a body; a back side of the body is rotatably connected with two cutting drill bits; a first driving motor for driving the two drill bits to rotate is installed in the body; a wire cutting device is arranged in the body; the wire cutting device comprises an installation platform, pulleys, a diamond cutting line, a reciprocating connecting bar and a second driving motor; the upper and lower ends of the installation platform are backward provided with two supporting bars; the front and back ends of the same side of each supporting bar are rotatably connected with the pulleys; the back side of the installation platform is rotatably connected with two turntables; the reciprocating connecting bar is rotatably connected to the eccentric places of the two turntables; both ends of the diamond cutting line are connected with both ends of the reciprocating connecting bar and bypass all the pulleys; the back side in the body is provided with a bar-shaped opening; and the body is internally provided with an electric telescopic device for driving the wire cutting device to move back and

forth. The present invention can cut a complete rock spline at one time, has no breaking and fragmentation of the rock spline, and is conducive to geological and mineral exploration research.

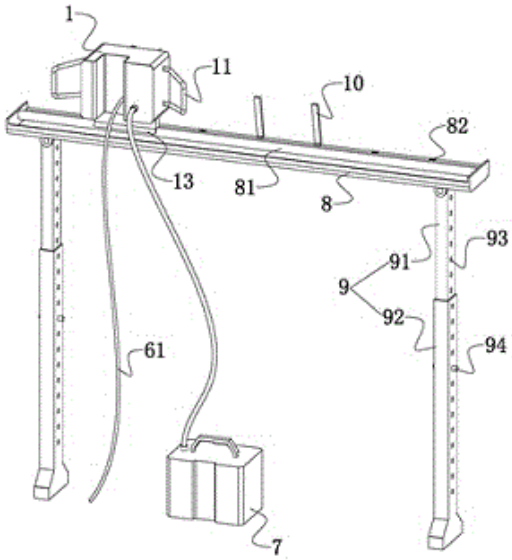

21: 2023/01417. 22: 2023/02/03. 43: 2023/04/03
51: G01C
71: KUNMING METALLURGY COLLEGE
72: PING, PAN, YAN, DAO, HE, CHANG, TING, LI JING, YONG, CHENG, WEI, WU, LUN, ZHANG XIAO, CONG, LIU, JU, JIA FU, JIA, LU, LONG, JIAN
33: CN 31: 202210135702.5 32: 2022-02-15
54: NOVEL INTEGRATED LINEAR GEOLOGICAL OCCURRENCE MEASURING DEVICE
00: -
The present invention discloses a novel integrated linear geological occurrence measuring device, which relates to the field of field formation occurrence measurement and aims at the existing problem that geological occurrence cannot be measured well in the condition of insufficient power. The following solution is proposed, which comprises a transparent support bottom plate; the upper part of the transparent support bottom plate is hinged with a compass body, the center of the rear side of the transparent support bottom plate is slidably connected with a stabilizing mechanism, the center of the compass body is rotationally connected with a rotating rod, the front side of the rotating rod is rotationally connected with a first pointer, and the front side of the rotating rod is rotationally connected with a moving rod. The present invention is provided with the compass body and a second pointer, and data measurement can be conducted through the second pointer, an inner value table and an outer value table; in addition to measuring plunge direction and plunge as well as pitch direction and pitch, the device can also be used for conducting geological exploration through a data recording and transmitting instrument.

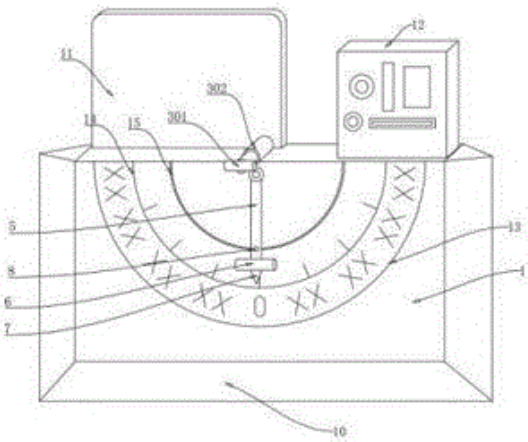

21: 2023/01418. 22: 2023/02/03. 43: 2023/04/03
51: G01C
71: KUNMING METALLURGY COLLEGE
72: LONG, JIAN, YAN, DAO, PING, PAN, HE, CHANG, TING, LI JING, YONG, CHENG, WEI, WU, JU, JIA FU, QI, YAO ZHI, YAO, PU XIN, MIN, WANG YAN, NING, JIANG MEI, RUI, SHI, XIANG, WANG YU, JIA, LU
33: CN 31: 202210217650.6 32: 2022-03-08
54: GYROSCOPE-BASED INTEGRATED LINEAR GEOLOGICAL OCCURRENCE MEASURING DEVICE
00: -
The present invention belongs to the technical field of geological prospecting equipment, and discloses a gyroscope-based integrated linear geological occurrence measuring device, which comprises a spud pile. The upper part of the spud pile is rotationally provided with an air resistance correcting body, the outer end of the air resistance correcting body is fixedly connected with electric valves, the upper part of the air resistance correcting body is fixedly provided with an electronic compass, and the lower end of the air resistance correcting body is rotationally hung with an elevation measuring instrument which can be rotated in the horizontal direction. In the present invention, the first piston moves along the inner wall of the first cylinder and

consumes kinetic energy by means of exhaust and suction of the first cylinder, the second piston moves back and forth along the inner part of the second cylinder and consumes kinetic energy, which avoids the angle error compared with consumption directly by friction, and the biaxial design of the air resistance correcting body and the use of the elevation measuring instrument as a plumb are convenient for the electronic compass to be automatically in the horizontal state.

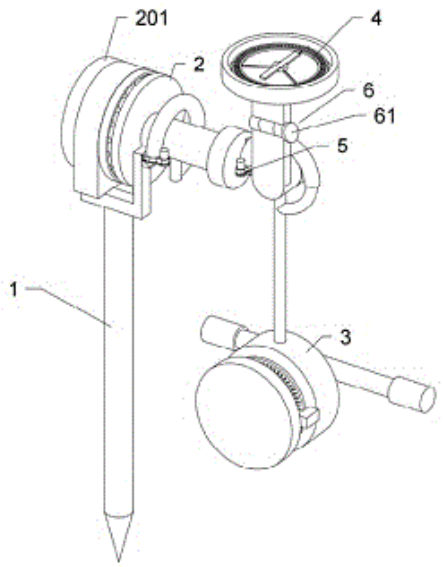

21: 2023/01436. 22: 2023/02/03. 43: 2023/04/25
51: G06Q
71: INNOVATIVE ROBOT DELIVERY GMBH
72: BORGER, Christian, MAYER, Boris, SCHARES, Christof
33: DE 31: 10 2020 214 660.8 32: 2020-11-20
33: DE 31: 10 2020 216 558.0 32: 2020-12-23
33: DE 31: 10 2020 216 560.2 32: 2020-12-23
33: DE 31: 10 2021 200 970.0 32: 2021-02-03
33: DE 31: 10 2021 201 155.1 32: 2021-02-08
33: DE 31: 10 2021 103 926.6 32: 2021-02-18
33: DE 31: 10 2021 104 973.3 32: 2021-03-02
33: DE 31: 10 2021 201 964.1 32: 2021-03-02
33: DE 31: 10 2021 207 617.3 32: 2021-07-16
33: DE 31: 10 2021 207 620.3 32: 2021-07-16

54: METHOD, DEPOT FACILITY AND SYSTEM FOR HANDOVER OF A PLURALITY OF PARCELS TO A PLURALITY OF RECIPIENTS AND/OR TO RECEIVE A LARGE NUMBER OF PARCELS FROM MULTIPLE DEPOSITORS

00: -

The invention relates to a method for transferring a plurality of packages, and is characterised in that: a common optimised transfer point for the transfer to the relevant recipients and/or deliverers within a specific transfer period is determined for a plurality of packages from a plurality of possible spatially separated transfer points taking into account at least one expenditure parameter of at least one relevant recipient and/or at least one relevant deliverer; at least some of the depot devices are designed as mobile depot devices for storing and providing a plurality of packages within a given transfer period at a location as a common optimised transfer point for transferring the plurality of packages to the relevant recipients and/or from deliverers of the plurality of packages; packages intended for transfer within the transfer period are transferred to the depot devices before the transfer periods; and the transfer to the recipients and/or from the deliverers takes place at the assigned common optimised transfer point within the given transfer period.

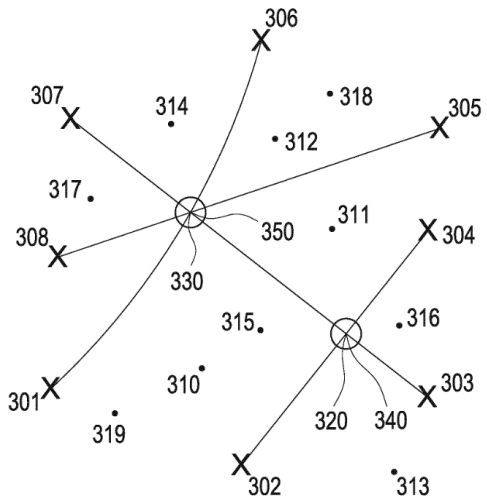

21: 2023/01464. 22: 2023/02/06. 43: 2023/05/02
51: A01N; C05G; C12R
71: Shanghai Jiao Tong University
72: CHEN, Jie, DING, Yi

54: PREPARATION AND APPLICATION OF PROBIOTIC FERTILIZER COATED WITH TRICHODERMA AND BACILLUS

00: -

Disclosed are preparation and application of a probiotic fertilizer coated with Trichoderma and Bacillus. The method includes the following operation steps: (1) preparing high-temperature-tolerant Trichoderma asperellum powder; (2) preparing Bacillus amyloliquefaciens powder; (3)

weighing a potassium sulfate compound fertilizer in which N: P2O5: K2O = 14: 16: 15; (4) adding 0.18 percent of an anti-blocking agent S1 in step (3); (5) after uniformly wrapping the potassium sulfate compound fertilizer with the anti-blocking agent, adding the Bacillus amyloliquefaciens prepared in step (2); and (6) adding the Trichoderma asperellum powder prepared in step (1), and uniformly mixing the components to obtain the probiotic fertilizer coated with Trichoderma and Bacillus. The Trichoderma and Bacillus coated fertilizer with a biocontrol function prepared by the present disclosure has a good prevention and control effect on crop diseases; and meanwhile, the utilization efficiency of the fertilizer is improved.

21: 2023/01465. 22: 2023/02/06. 43: 2023/05/02
51: E02D
71: Zhengzhou University of Aeronautics
72: WANG Jibing, CHEN Mengze, WEI Xiaogang, ZHAO Rui, YUE Pengwei

54: FOUNDATION PIT SLOPE PROTECTION AND REINFORCEMENT DEVICE FOR CIVIL ENGINEERING

00: -

The invention disclose a foundation pit slope protection reinforcement device for civil engineering, which comprise a plurality of guard plates, wherein a first chute is formed on one side of that guard plates; a first slider is fixedly connected to the side of the guard plates far away from the first chute; the first slider is in sliding connection with the first chute of an adjacent guard plate; a plurality of first positioning assemblies are installed on the first chute; and the first positioning assemblies are detachably connected with the first sliders on the adjacent guard plates; a base is arranged at the bottom of the guard plate, and a lifting assembly is installed on the base; the lifting end of the lifting assembly is hinged with the cylinder end of the cylinder; the lifting end of the lifting assembly is far away from the cylinder end; the piston end of the cylinder is hinged with the end face of the guard plate; and the piston end of the cylinder is located above the lifting end of the lifting assembly. According to the invention, the installation height and inclination angle of the guard plates can be adjusted, and the application range is wide; meanwhile, the connection between the guard plates is stable, so that the stability of the whole reinforced structure is improved, the operation is simple, and the construction efficiency is improved.

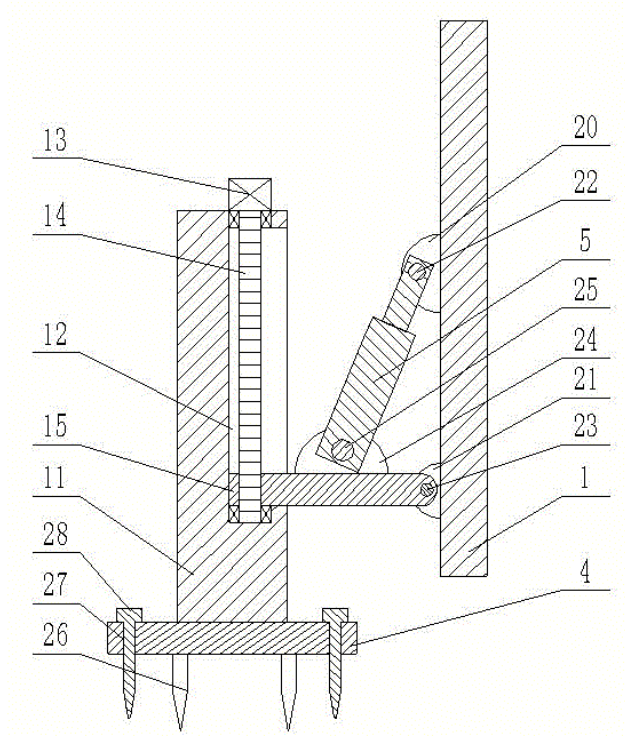

21: 2023/01466. 22: 2023/02/06. 43: 2023/05/02
51: F28F
71: Shenyang University of Technology
72: TANG, Henan, WU, Hao, MA, Jinyu, WANG, Miancai, CHEN, Zihui, LIU, Jialong, DUAN, Yuting, PAN, Li

54: A CLEANING ROBOT FOR GLASS CURTAIN WALL OF HIGH-RISE BUILDINGS

00: -

The invention relates to a high-rise building glass cleaning robot. The upper body plate and the lower body plate of the robot are fixedly connected up and down correspondingly, and the surroundings are sealed with protective shells around the fuselage. The upper body plate is equipped with a shell, and the upper body plate and the lower body plate. A plurality of crawling mechanisms are arranged symmetrically on both sides, a cleaning mechanism is arranged under the lower body board, a visual system is arranged on the top of the casing, a circuit board and a 24-way steering gear board are arranged inside the casing, and a power supply is fixed on the lower body board. The invention uses the vacuum adsorption mechanism at the end of the crawling mechanism to adsorb the cleaning robot on

the glass or wall, and then uses the mop tray in the cleaning mechanism to clean the glass curtain wall, which can continuously clean the wall while moving rapidly, and can solve the dangerous problem of the existing manual operation of glass curtain wall cleaning in high-rise buildings and the glass cleaning robot in the prior art is easy to fall off Technical problems such as poor cleaning effect and inability to overcome obstacles.

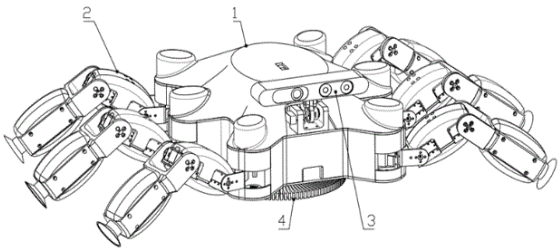

21: 2023/01467. 22: 2023/02/06. 43: 2023/05/02
51: E04B
71: Lu 'an Likang Sign Co., LTD
72: Siwen Gao
54: SYNCHRONOUSLY REMOVE AND INSTALL SPLICE TYPE BUILDING TEMPLATES
00: -
The invention provides a synchronous disassembly splicing type building template, which comprises a square plate body, a connecting rod threaded through the plate body, a transverse threaded hole between a pair of opposite surfaces and a longitudinal threaded hole between another pair of phase ground. The connecting rod comprises a coaxial fixed connection thread section, a butt head section and a butt tail section, and the thread section is located between the butt head section and the butt tail section. The connecting rod is inserted into the transverse thread hole and the longitudinal thread hole and is matched with the threaded connection. The connecting rod matched with the transverse thread hole is the x-axial connecting rod, and the connecting rod matched with the longitudinal thread hole is the Y-axial connecting rod. Butt first section is arranged into a cylindrical and its end position is arranged into a square groove of the wrench socket, butt tail section is arranged into a cylindrical and its end position is arranged into a quadrilateral prism with the size of the wrench socket, the connecting rod can be connected in the X axis or Y axis and the connecting rod in the adjacent plate body butt.

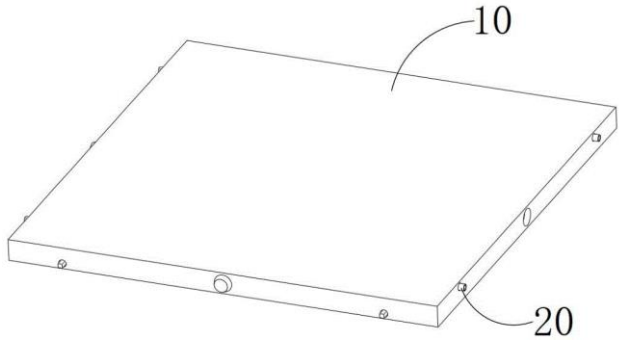

21: 2023/01468. 22: 2023/02/06. 43: 2023/05/02
51: E04B
71: Lu 'an Likang Sign Co., LTD
72: Siwen Gao
54: EASY TO OPERATE BUILDING TEMPLATE
00: -
The invention provides an easily operated building template, which comprises a plate body and a stud. One of the corners of the plate body is provided with a 45° chamfer and forms a chamfer face. The chamfer face is fixed with a square lug whose side length is equal to the width of the chamfer face, and the thickness of the lug is equal to 1/4 of the thickness of the plate body, which comprises a first plate body, a second plate body, a third plate body and a fourth plate body. Lug is arranged on the stud and can be moved up and down along the stud. Lug on the first plate body is arranged between the lower end face of the plate body and one quarter of the thickness side length, and lug on the second plate body is arranged between one quarter and two quarters of the thickness side length of the plate body. The lug on the third plate body is arranged on the plate body along the thickness of the side length of the two quarters to three quarters, the fourth plate body on the lug is arranged on the plate body along the thickness of the side length of three quarters between the top end, the lower end of the stud is provided with a bottom plate, the upper end of the stud is provided with a nut.

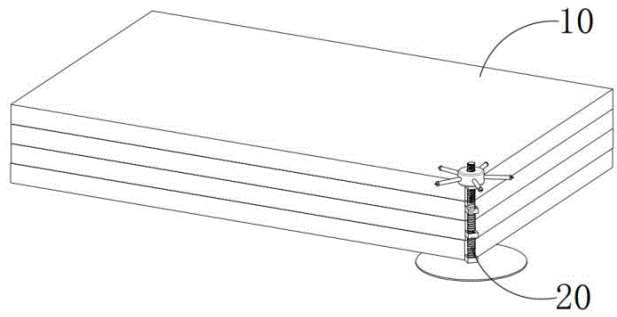

21: 2023/01469. 22: 2023/02/06. 43: 2023/04/12
51: E04B
71: Lu 'an Likang Sign Co., LTD
72: Siwen Gao
54: FOLDING BUILDING TEMPLATE
00: -
The invention provides a folding building template, which comprises a rectangular plate body and a connecting member. The plate body comprises a left end plate body, a right end plate body and a plurality of middle plates arranged to switch between a folded state and an expanded state. In the folded state, the left end plate body, the middle plate body and the right end plate body are laid layer upon layer, and the left end plate body is located at the bottom and the right end plate body is located at the top. In the unfolded state, the left end plate body, the middle plate body and the right end plate body are laid flat, and the left end plate body is located at the left end and the right end plate body is located at the right end. Under the state of expansion between the plate body and the side of the plate body is provided with a hinge and the hinge shaft is arranged along the length direction of the plate body, the connecting parts include the lug fixed on the end of the plate body along the length direction and through the stud in the lug, in the state of expansion, each lug threaded holes will be connected, rotate the stud and until the two lugs will be fixed connection, To realize the fixed connection between the plate body.

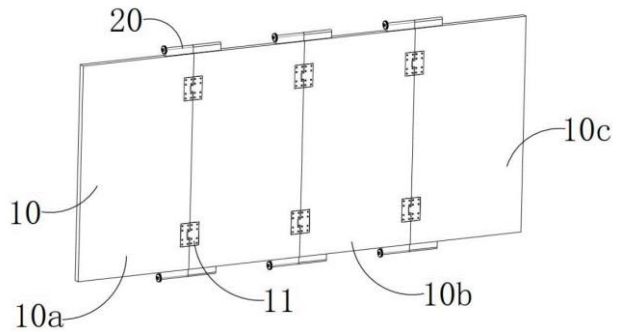

21: 2023/01470. 22: 2023/02/06. 43: 2023/04/12
51: E04B
71: Lu 'an Likang Sign Co., LTD
72: Siwen Gao
54: MULTIFUNCTIONAL BUILDING WALL
00: -
The invention provides a multifunctional building wall, which comprises a middle slab body, an outer slab body and a filling layer arranged between the middle slab body and the outer slab body. The middle slab body is provided with a rectangular stacking groove penetrating up and down. The stacking groove is arranged in a fireproof brick and the stacking of fireproof brick is exactly filled with the stacking groove. The end of the middle plate body is provided with a rectangular card groove and the cross section shape of the card groove is slightly smaller than the cross section shape of the middle plate body. The card groove is arranged along the thickness direction of the middle plate body to a partition board and the partition board divides the card groove into two equally large chutes. The end of the outer plate body is fixedly arranged with a bending plate which is bent 90 degrees toward its inner side. The end of the bending plate away from the outside plate body is fixed in the slide block toward the inside of the 90 degrees bending, the slide block is attached to the nearest side of the slide slot and along the thickness direction of the middle plate body to form a sliding guide, the filling layer can be set into a waterproof layer or insulation layer or noise reduction layer.

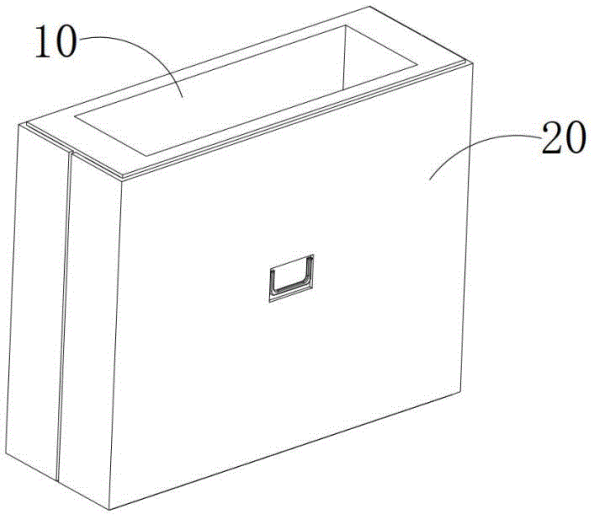

21: 2023/01471. 22: 2023/02/06. 43: 2023/04/12
51: E04B
71: Lu 'an Likang Sign Co., LTD
72: Siwen Gao
54: PREFABRICATED STEEL CONSTRUCTION WALL
00: -
The invention provides an assembled steel structure building wall, which comprises a rectangular steel base, a square-shaped steel frame and a wall plate. The steel base is fixed by pouring concrete on the foundation, and the L-shaped card plate is fixed on the end face of the steel base. The card plate is composed of an inner card plate and an outer card plate and the spacing between them is arranged. The L-shaped clamp groove is formed between the outer plate and the inner plate and the width of the clamp groove is equal to the thickness of the steel frame. The steel frame is arranged vertically and the corner of the lower end is clamped in the clamp groove between the inner plate and the outer plate. The steel frame is welded between the steel frame and the plate, and the side of the steel frame is arranged into a 45° inclined plane. Between the steel frame and the steel frame through the inclined plane is closely matched and welded along the combination of the two parts, the wall board and the size of the steel frame and the wall board are arranged around the steel edge, the edge and the inner side of the steel frame is closely matched and between the two through spot welding fixed connection.

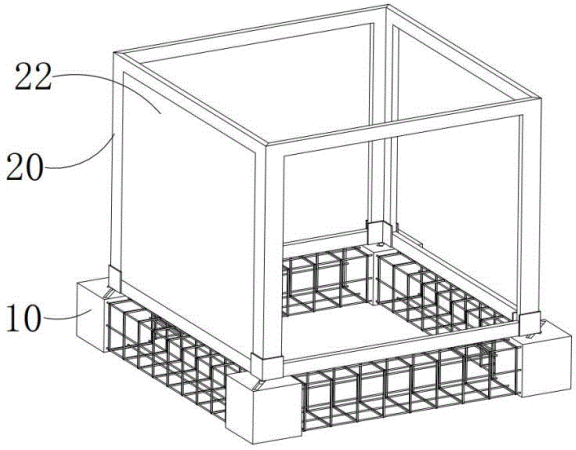

21: 2023/01474. 22: 2023/02/06. 43: 2023/05/02
51: A61K; C12N; A61P
71: Liaocheng University
72: SI, Zhenshu, WANG, Kaili, CHEN, Lele, LIU, Cheng, LI, Yubao, LU, Jianbiao, PEI, Lanying, CAO, Shengliang
54: FOWL ADENOVIRUS 4 STRAIN, VACCINE, VACCINE COMPOSITION AND MULTI-COMBINED VACCINE THEREOF, AND APPLICATIONS OF FOWL ADENOVIRUS 4 STRAIN, VACCINE AND VACCINE COMPOSITION
00: -
The present invention relates to the field of biomedicine, in particular to a fowl adenovirus 4 strain, a vaccine, a vaccine composition and a multi-combined vaccine thereof, and applications of the fowl adenovirus 4 strain, the vaccine and the vaccine composition. The preservation number of the fowl adenovirus 4 strain of the present invention is CGMCC No.45070.

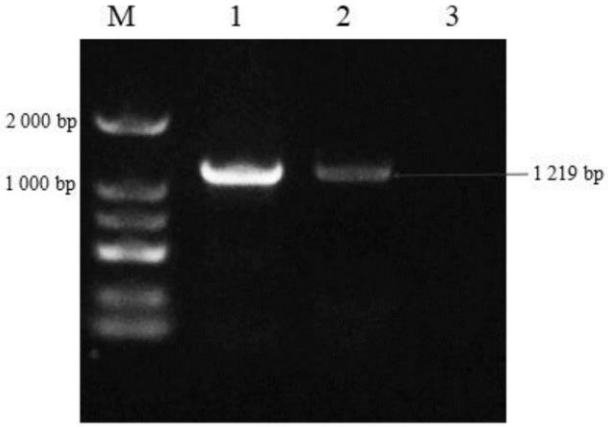

21: 2023/01476. 22: 2023/02/06. 43: 2023/05/02
51: G06F

71: Xinjiang Institute of Ecology and Geography, Chinese Academy of Sciences
72: Zhang Haiyan, Gao Yuting, Yang Jinhua, Wang Qingqing, Zhang Yinling, Liu Na, Yu Ruide
54: RETRIEVAL AND ANALYSIS METHOD, DEVICE AND MEDIUM FOR PRE-AUDIT INFORMATION OF ACADEMIC JOURNALS
00: -
The invention discloses a retrieval and analysis method, device and medium for pre-audit information of academic journals. The method comprises the following steps: extracting at least two keyword features in the pre-audit information of academic journals, and arranging and combining the at least two keyword features to form a plurality of retrieval matrices. Based on the retrieval matrix, searching in a database to obtain retrieval document data, wherein the retrieval document data comprises at least one retrieval document. Comparing the retrieved documents with the pre-audit information of the academic journals to determine the duplicate checking rate. Selecting the retrieval documents with duplicate checking rate higher than a preset threshold and the retrieval matrix corresponding to the retrieval documents to generate a retrieval analysis report. According to the invention, corresponding documents are retrieved by extracting keyword features and combining them into different retrieval matrices based on keyword features, and the pre-audit information of academic journals is compared with the documents one by one, so that the retrieval and analysis efficiency of the pre-audit information of academic journals is effectively improved.

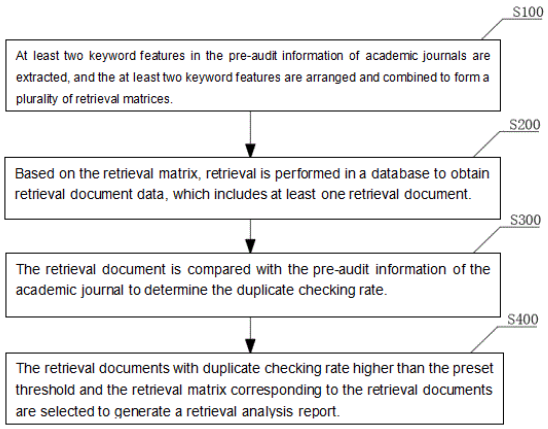

21: 2023/01480. 22: 2023/02/06. 43: 2023/04/12
51: A01K

71: Heilongjiang River Fishery Research Institute of Chinese Academy of Fishery Sciences, Yantai Jinghai Ocean Fishery Co.LTD, Yantai Jinghai Blue Seed Industry Research Institute Co.LTD
72: XU Gefeng, GUO Fuyuan, WANG Gaochao, CAO Xuebin, ZHANG Lili, GU Wei, ZHENG Longhua, HUANG Tianqing, DONG Fulin, LIN Jiliang, GAO Bin, LIU Xuemao, LIU Enhui
54: DEVICE AND METHOD FOR PREVENTING AND CONTROLLING SAPROLEGNIA BY OZONE IN RAINBOW TROUT FRY BREEDING PROCESS
00: -
A device and method for control Saprolegnia by ozone in rainbow trout fry breeding process. In the process of rainbow trout hatching, it is necessary to sterilize the Saprolegnia in the hatching water. The sterilization method adopted is to directly insert the ozone inlet pipe into the hatching water to sterilize the Saprolegnia. The sterilization effect of this method is not good, and the ozone introduced is inhomogeneous. The invention comprises a device tank, a rainbow trout egg hatching barrel, a vibration generator, an aeration device and a controllable flow water pump; the rainbow trout egg hatching barrel is located in the device tank, and the gap between the rainbow trout egg hatching barrel and the device tank is connected and fixed by an annular water leakage grille; the vibration generator and the aeration device are arranged on the water leakage grille; the bottom of the rainbow trout egg hatching barrel is provided with an egg isolation net and a controllable flow water pump. The invention relates to a device and a method for preventing and controlling Saprolegnia by ozone in rainbow trout fry breeding process.

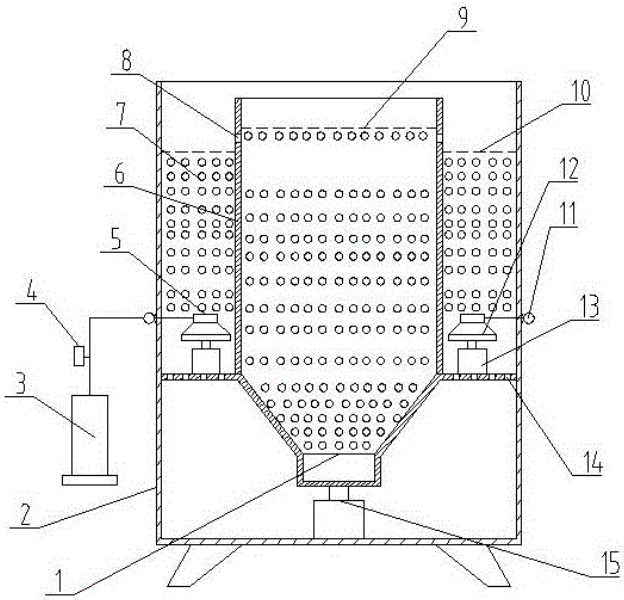

21: 2023/01481. 22: 2023/02/06. 43: 2023/05/02
51: A61H
71: Liu Huajun
72: Liu Huajun
54: A HEAT SOURCE BODY REHABILITATION PHYSIOTHERAPY BELT FOR CERVICAL AND LUMBAR VERTEBRAE
00: -
A heat source body rehabilitation physiotherapy belt for cervical and lumbar vertebrae, comprising a restraint belt body, the rear inner side of the restraint belt body is provided with a rear fixed pad; the middle part of the inner side of the rear fixed pad is provided with a graphene heat source body, the middle part of the inner side of the rear fixed pad is provided with a wrapping sleeve, and the wrapping sleeve wraps the graphene heat source body, the outer edge of the wrapping sleeve is fixedly connected to the rear fixed pad; the area between the outer edge of the rear fixed pad and the outer edge of the wrapping sleeve is evenly provided with physiotherapy magnets. The user wears this device on the waist or neck, and the rear fixed pad supports the back of the waist to provide a heat source for the user's waist, the device has good heating stability, and can perform far-infrared physiotherapy on the human body through the far-infrared wavelength generated by its heat energy, it has uniform heating, fast heating, fast heat dissipation, good stability, healthy and environmentally friendly.

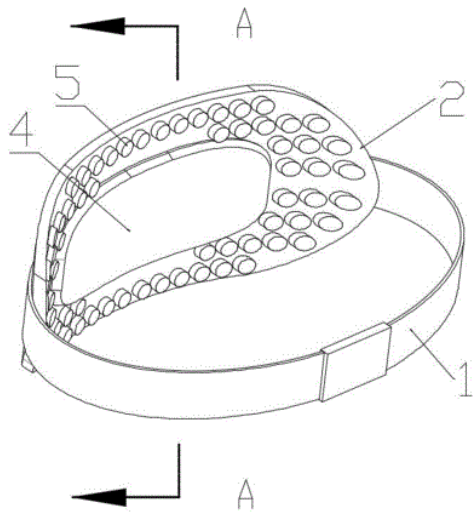

21: 2023/01484. 22: 2023/02/06. 43: 2023/05/02
51: F02M
71: Yee lian guey
72: Yee lian guey, Liu Xuemei
54: HIGH-EFFICIENCY FUEL ECONOMIZER FOR AUTOMOBILE ENGINES
00: -
The invention discloses a high-efficiency fuel economizer for automobile engines, wherein it comprises a helical main body; both ends of the helical main body are provided with oil pipeline fixing parts; the oil pipeline fixing part comprises an elastic band, and one end of the elastic band is fixedly connected to the end of the helical main body; the elastic band is provided with a Velcro loop part on the outside close to the connection between the elastic band and the helical main body, and the elastic band is provided with Velcro hook part on the inner side away from the connection between the elastic band and the helical main body. In the invention, the helical main body is sleeved on the oil pipeline, and then the elastic bands at both ends of the helical main body are wound on the oil pipeline, thereby realizing a more fixed fixation of the helical main body on the oil pipeline, and also ensuring that the helical main body does not slide on the oil pipeline. The invention has small size, does not take up space, is convenient to replace, is very easy to popularize and use, and has good fuel-saving effect.

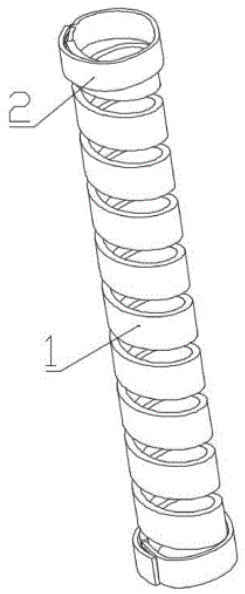

21: 2023/01485. 22: 2023/02/06. 43: 2023/05/02
51: C12N
71: Zhejiang Academy of Agricultural Sciences
72: Liu Chen, Cun Zhang, Zheng Ni, Tao Yun, Weicheng Ye, Jionggang Hua, Yinchu Zhu
54: A CONSTRUCTION METHOD OF DUCK ENTERITIS VIRUS WITH ENVELOPE GLYCOPROTEIN GG GENE DELETION
00: -
The invention relates to the technical field of recombinant virus, in particular to a construction method of duck enteritis virus with envelope glycoprotein gG gene deletion. The beneficial effect is as follows: a BAC mutant with gG gene deletion is constructed by using Red-mediated recombinant technology, and the corresponding recombinant virus is obtained by transfection of cells. The efficiency of constructing DEV virus mutants is improved. gG gene BAC mutants were transfected into CEFs cells to obtain recombinant virus, which could form obvious plaque. This suggests that gG is a nonessential gene for DEV replication. DEV gG gene was selected as the research object, and gG gene deletion virus was constructed, which will further carry out more detailed and systematic study on the biological characteristics of virus. This can elucidate the biological characteristics of gG and evaluate the feasibility of gG gene deletion virus as a gene deletion vaccine for duck enteritis virus.

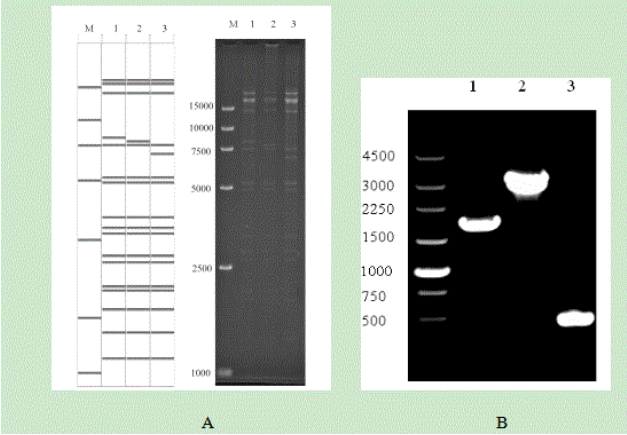

21: 2023/01491. 22: 2023/02/06. 43: 2023/05/03
51: H02J
71: Amar Kumar Barik, Subash Chandra Sahoo, Dulal Chandra Das
72: Amar Kumar Barik, Subash Chandra Sahoo, Dulal Chandra Das
54: A COORDINATED HYBRID MICROGRID SYSTEM WITH QUASI-OPPOSITIONAL SELFISH-HERD OPTIMIZATION
00: -
The present disclosure relates to a coordinated hybrid microgrid system with quasi-oppositional selfish-herd optimization. The system comprises of various bio-renewable power generation units. In the present disclosure two hybrid microgid systems are developed, one is isolated mode and the other is interconnected mode of two-unequal microgrids, and their frequency response with demand response support is investigated. The main aim of the present disclosure is to study the effective regulation of load-frequency oscillations due to the penetration of renewable generations in bio-renewable cogeneration based hybrid microgrids with demand response (DR) support considering optimal utilization of resources. Simulink model for each unit of the proposed system of microgrid is developed, modelling suitable DR strategies for both isolated and interconnected modes. A novel quasi-oppositional selfish-herd optimization algorithm in both the modes is also proposed. The results showed that the system frequency oscillations are regulated satisfactorily by DR support for both the modes.

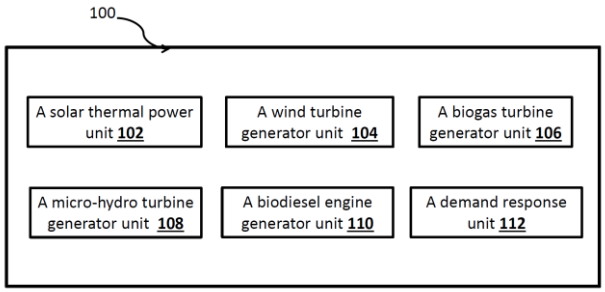

21: 2023/01492. 22: 2023/02/06. 43: 2023/05/03
51: G01N
71: DR. ABHAYA R. JOGLEKAR, DR. SARITA DUBEY, VIDEH NANDINI, PRATIBHA PRADHAN, POONAM PRADHAN, VARSHA HIRWANI
72: DR. ABHAYA R. JOGLEKAR, DR. SARITA DUBEY, VIDEH NANDINI, PRATIBHA PRADHAN, POONAM PRADHAN, VARSHA HIRWANI
54: A METHOD FOR ANALYZING LESSOR KNOWN TRADITIONAL RECIPES
00: -
The present disclosure relates to a method for analyzing lessor known traditional recipes from the region of Chhattisgarh and Odisha border, wherein multiple lessor known recipes are documented and prepared and further analyzed for their nutritive values. The aim of the present disclosure is to document and promote such health recipes that follow sustainable eco system, for the better health of next generation. The analysis showed similarities in the food culture of Odisha and Chhattisgarh where the recipes of Chhattisgarh is found to be heavily influenced by the food culture of Odisha.

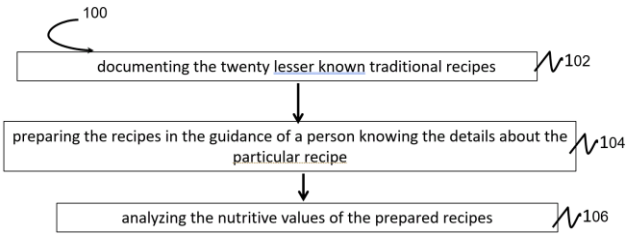

21: 2023/01493. 22: 2023/02/06. 43: 2023/05/03
51: H02J
71: Subash Chandra Sahoo, Dulal Chandra Das, Amar Kumar Barik
72: Subash Chandra Sahoo, Dulal Chandra Das, Amar Kumar Barik
54: A PROFICIENT FREQUENCY REGULATION SYSTEM FOR MICROGRID OPERATIONS
00: -
The present disclosure relates to a proficient frequency regulation system for microgrid operation. The current disclosure provides a unique frequency regulation method that uses the Green Leafhopper Flame optimization algorithm. GLFOA-tuned PID controllers have been investigated for two interconnected hybrid microgrids (hμGs), taking the 50 Hz frequency environment in India into consideration. Multiple renewable energy sources, including solar-thermal units, wind turbine generator units, solar photovoltaic units, biogas turbines, biodiesel generator units, and storage units, are used in the two interconnected hybrid microgrids (hμGs). The performance of the (hμGs) model is highly satisfactory. Maximum reported peak overshoot, undershoot, and settling time are, respectively, 0.01051 Hz, – 0.00764 Hz, and 14.15 s. This demonstrates the GLFOA-tuned PID controllers' ability to maintain system frequency under all conceivable unpredictable circumstances.

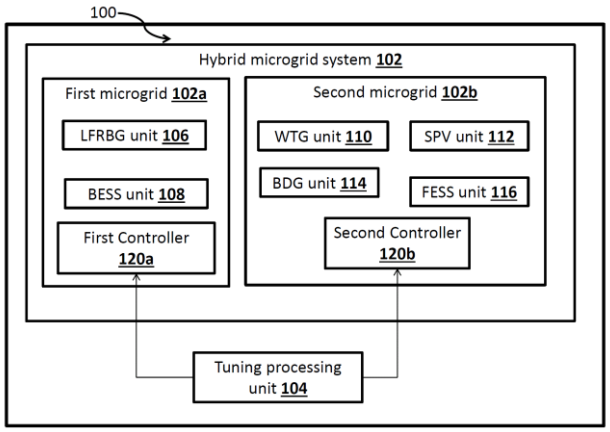

21: 2023/01495. 22: 2023/02/06. 43: 2023/05/03
51: G10L
71: Dr. Ram Chandra Barik, Dr. Rojalina Priyadarshini, Dr. Tusharkanta Samal, Dr. Debendra Muduli, Dr. Surendra Kumar Nanda, Dr. Dillip Khamari, Dr. Rashmikanta Pati
72: Dr. Ram Chandra Barik, Dr. Rojalina Priyadarshini, Dr. Tusharkanta Samal, Dr. Debendra Muduli, Dr. Surendra Kumar Nanda, Dr. Dillip Khamari, Dr. Rashmikanta Pati
54: A METHOD FOR TRANSLATION BY USING A SPEECH ASSISTED DICTIONARY AUTOMATION SYSTEM
00: -
The present disclosure relates to a method for translation by using a speech assisted dictionary automation system that is transliterated to English, Hindi, Odia using automatic speech recognition

(ASR). The invention relates to a word-based, phonologic feature-based audio and audio-visual speech recognition system for both short and big vocabulary employing phonetically spoken speech samples from speakers, even intended to be used for manual text entry on a personal computer. The speech recognition software converts spoken words into text and analyses their meaning by visually presenting their noun, synonym, or related word in English—even in Indian languages like Hindi and Odia.

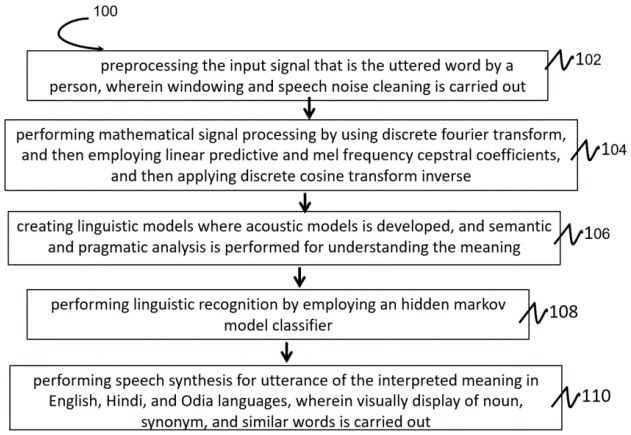

21: 2023/01496. 22: 2023/02/06. 43: 2023/05/02
51: A61N
71: Guangzhou Huangpu Aperture Targeted Photon Technology CO., LTD
72: Linqi, WU

54: LIGHT SOURCE COMBINATION FOR TARGETED CORRECTION OF VISUAL DISEASES RELATED TO FORM SENSES, LIGHT SENSES AND COLOR SENSES AFTER EYE GENE SEQUENCING

00: -

The present invention belongs to the technical field of correction of visual diseases, and specifically relates to a light source combination for targeted correction of visual diseases related to form senses, light senses and color senses after eye gene sequencing. Further disclosed is an application of the light source combination. The light source combination for correcting visual diseases related to form senses, light senses and color senses described in the present invention is developed on the basis of the principles of nutritional genomics, bio-photonics, optogenetics and fundus tissue functional protein (gene), and includes different light sources which can emit selected frequency-band wavelengths, such that monochromatic light with different frequency-band wavelengths or a monochromatic light combination is obtained. In this way, irradiation and light supplement are performed on a patient by using the light source combination, such that a monochromatic light combination spectrum with specific wavelengths, optical density and significant color difference may be supplemented to the eyes of the patient. By means of activating a light-dependent molecular pathway, targeted monochromatic spectrum induction is performed on light sensitive gene transcription factors, to preferably enhance opsin synthesis and the regulation of hyperpolarized transmembrane signal transduction functions in cells closely related to vision, so as to promote eyeball sub-tissue (retinal cell plexus, choroid, sclera, and the like) cells to achieve compensatory synergistic development and improvement of fundus tissue via photobiomodulation, cellular biochemical reaction and photodynamic pathways, thereby improving the form sense, light sense and color sense capabilities of the eyes. For people who do not have enough outdoor exercise and less exposure to natural light and who stay under an LED artificial light source lighting environment for a long time and use cell phones and computers for a long time, the light source combination has a remarkable effect on improving symptoms including dry eye syndromes, vitreous opacity of eyeballs and rapid growth of ocular axes, thereby effectively preventing, controlling and correcting myopia and amblyopia. For the correction of visual diseases caused by poor light environments, the light source combination for targeted correction of visual diseases related to form senses, light senses and color senses after eye gene sequencing in the present invention is safe, significant and lasting in correction effect, and has no side effects, such that the light source combination is suitable for clinical promotion.

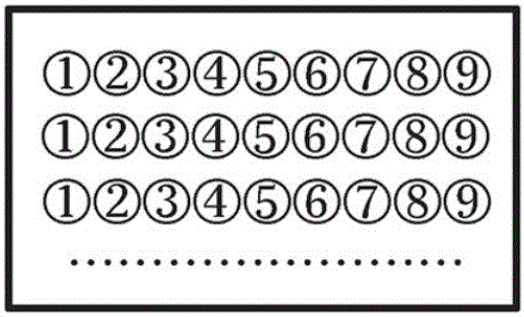

21: 2023/01501. 22: 2023/02/06. 43: 2023/05/02
51: C08K; C08L
71: LIMING VOCATIONAL UNIVERSITY
72: WANG, Jingyi, XIAO, Hui, ZHAN, Yingxu, ZENG, Feihu, ZHANG, Qinghai
33: CN 31: 202011371508.4 32: 2020-11-30
54: PREPARATION METHOD FOR EPOXY RESIN CLEANING ADHESIVE, AND APPLICATION THEREOF
00: -
Disclosed in the present invention is a preparation method for an epoxy resin cleaning adhesive, comprising four steps of preparing a base adhesive, preparing an oil material, preparing a kneaded adhesive, and preparing a cleaning adhesive. The swelling effect of an oligomer PTMEG on a cured epoxy resin is utilized; the swollen epoxy resin is subjected to penetration stripping in combination with high penetrability of small molecular alcohol amines; finally, by means of the adhesion effect of the base adhesive, the cured epoxy resin is removed and cleaned, and the cleaning effect is good. Also disclosed in the present invention is an application of the epoxy resin cleaning adhesive in cleaning of residual epoxy resin for molding and curing in a metal mold. The cleaning method is simple and convenient, an operation time window is long, the cleaning effect is good, and secondary contamination cannot be caused.

21: 2023/01512. 22: 2023/02/07. 43: 2023/05/02
51: G06F
71: BEIJING DASHENFENGHUA TECHNOLOGY CO., LTD.
72: LIU, Shangyuan, BAI, Wei, LIU, Wei
54: METHOD FOR ACCURATELY RETRIEVING AND POSITIONING PHOTOSENSITIVE FILM IMAGE INFORMATION
00: -
The present invention relates to the technical field of image marking, positioning, and retrieval of information recorded in a photosensitive film, and particularly relates to a method for accurately retrieving and positioning a photosensitive film image marker. The present invention provides a method for accurately retrieving and positioning photosensitive film image information, which takes advantage of technical characteristics of a digital imaging device related to the photosensitive film. In addition, on the basis of giving full play to software and hardware functions of a computer device, film content information may be accurately retrieved and positioned in low cost, with simplicity, and in various forms. With the present invention, retrieval and utilization efficiencies of information recorded in the photosensitive film are effectively improved, and human-computer interaction applications of information are achieved more conveniently.

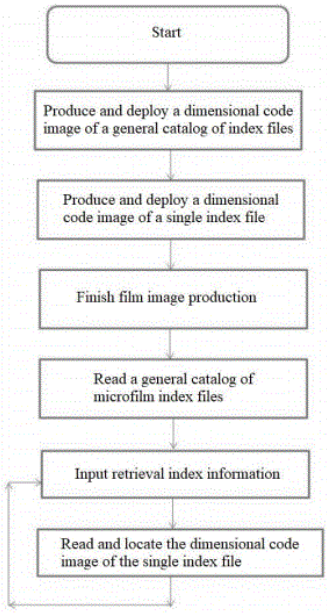

21: 2023/01513. 22: 2023/02/07. 43: 2023/05/02
51: G01N
71: Chinese Research Academy of Environmental Sciences
72: ZHANG, Qiuying, LI, Zhao, LIU, Jia, LIANG, Ming, GAO, Hongjie, LI, Fadong, QIAO, Yunfeng, LENG, Peifang
54: METHOD FOR DETERMINING AGE OF GROUND WATER AFFECTED BY POLLUTION
00: -
A method for determining age of ground water affected by pollution is provided. The method

includes: S1, determining the pollution effect of the ground water by analyzing a nitrate content of ground water; S2, introducing a carrier gas into a Freon detector by a first six-way valve disposed on a first carrier gas branch; S3, replacing gas in the ground water in a sample bottle by an on-off valve on a second carrier gas branch; S4, introducing the gas into an aeration pipe for treatment, and collecting Freon by cryogenic collection pipes and putting into the Freon detector via the first six-way valve. The present invention provides a method for determining age of ground water affected by pollution. The method is simple in structure and can obtain and detect the Freon content of ground water, thus obtaining the accurate age of ground water.

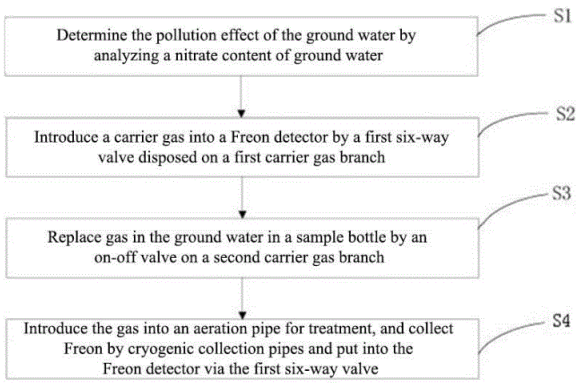

21: 2023/01518. 22: 2023/02/07. 43: 2023/04/12
51: G05B
71: HUAINAN NORMAL UNIVERSITY
72: ZHOU Yi, ZUO Hongkun, HUO Yuhong, GUO Xiangpeng

54: INTELLIGENT CONTROL METHOD FOR NONLINEAR VIBRATION OF PIEZOELECTRIC LAMINATED PLATES

00: -

The invention discloses an intelligent control method for nonlinear vibration of a piezoelectric laminated plate, which comprises the following steps: acquiring historical vibration data of the piezoelectric laminated plate, and performing parameter optimization on the historical vibration data of the piezoelectric laminated plate to generate optimized vibration data; Based on the compensation algorithm, the optimized vibration data are optimized and merged to generate a vibration data set; Constructing a neural network, inputting a vibration data set into the neural network for training, and generating a trained neural network model; Acquire real-time vibration data of a piezoelectric laminated plate, input that real-time vibration data of the piezoelectric laminated plate into a trained neural network model, and acquiring optimal vibration control parameter; According to the optimal vibration control parameters, the nonlinear vibration of piezoelectric laminated plates is intelligently controlled. The invention reduces the coupling effect of the piezoelectric laminated plate, intelligently controls the nonlinear vibration of the piezoelectric laminated plate at the same time, reduces the load of the piezoelectric laminated plate, and also reduces the plastic-like behavior of the force-displacement curve of the whole laminated plate.

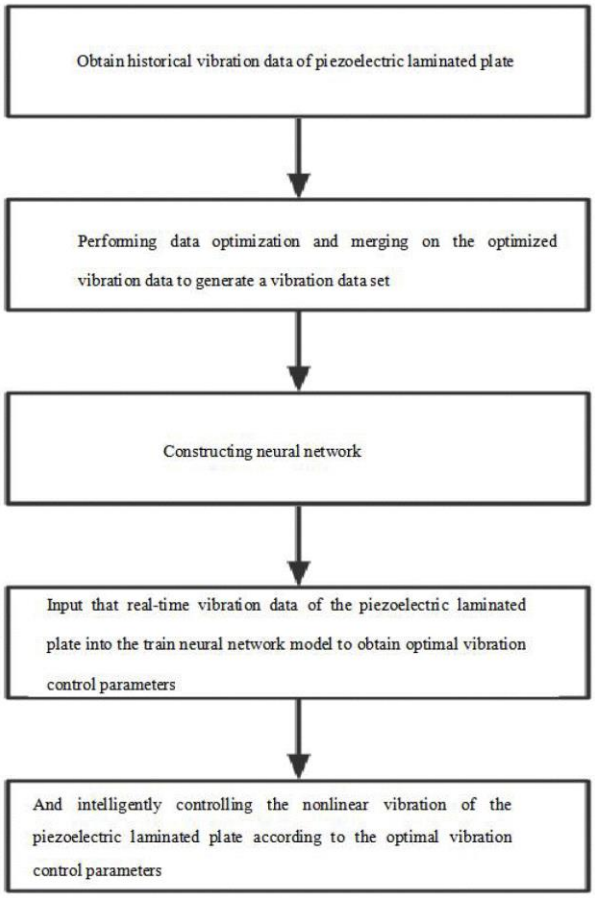

21: 2023/01519. 22: 2023/02/07. 43: 2023/04/12
51: E03F
71: AFFILIATED HOSPITAL OF WEIFANG MEDICAL UNIVERSITY
72: FENG Lingjun, HUO Huixia

54: ANTI-CLOGGING SELF-CLEANING NEGATIVE PRESSURE DRAINAGE DEVICE

00: -
The invention discloses an anti-clogging self-cleaning negative pressure drainage device, which comprises a drainage bottle, wherein the drainage bottle is communicated with a negative pressure chamber through a connecting pipe; the negative pressure chamber is communicated with a negative pressure machine through a negative pressure tube; the top end of the drainage bottle is communicated with one end of a drainage tube; the other end of the drainage tube is detachably connected with an anti-clogging drainage mechanism; a cleaning mechanism is rotatably arranged inside the drainage bottle; and a liquid discharge tube is communicated with the bottom of the side wall of the drainage bottle. The drainage device can prevent clogging in the drainage process and ensure the smooth drainage.

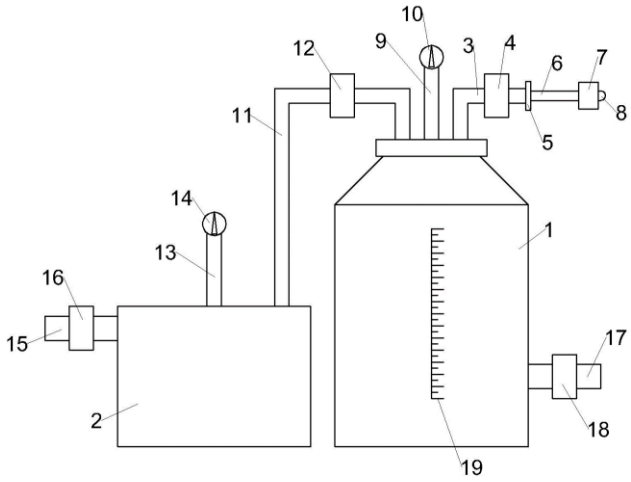

21: 2023/01522. 22: 2023/02/07. 43: 2023/04/12
51: C12Q
71: Dr. Ashish Kumar Sarangi, Dr. Amarendranath Choudhury, Mr. Dhilleshwara Rao Vana, Dr. Rudra Narayan Sahoo, Mr. Wishard la Vincent Barreto, Dr. Kumar Pratyush, Dr. Sushma Jaiswal, Mrs. Madhu Chhanda Mishra, Mr. Tarun Jaiswal, Dr. Kapil Paiwal
72: Dr. Ashish Kumar Sarangi, Dr. Amarendranath Choudhury, Mr. Dhilleshwara Rao Vana, Dr. Rudra Narayan Sahoo, Mr. Wishard la Vincent Barreto, Dr. Kumar Pratyush, Dr. Sushma Jaiswal, Mrs. Madhu Chhanda Mishra, Mr. Tarun Jaiswal, Dr. Kapil Paiwal
33: IN 31: 202231074077 32: 2022-12-20
54: A METHOD FOR DETECTING CANCEROUS CELLS IN ASYMPTOTIC PATIENTS USING MONOCLONAL ANTIBODY DRUGS
00: -
The present invention discloses a method of detecting cancerous cells in asymptotic patients using monoclonal antibody drugs. A procedure for determining a subject's biological sample, levels, and classifying the sample into one of three groups, with the first group consisting of no abnormal elevation, the second group consisting of abnormal elevation of the level but no abnormal elevation of the level of dm2, and the third group consisting of abnormal elevation of the level but no abnormal elevation of the level of dm2, is a procedure. The monoclonal antibody-based cancer therapy has emerged as one of the most effective therapeutic approaches for both hematologic and solid tumors. A number of groundbreaking clinical trials that paved the path for new generation antibodies and subsequent clinical success are produced as a result of the early merging of serological approaches for cancer cell surface antigen discovery with hybridoma technology.

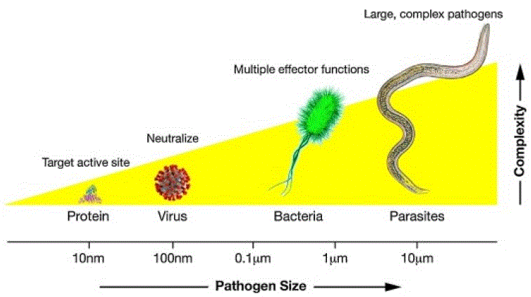

21: 2023/01552. 22: 2023/02/08. 43: 2023/05/02
51: C12Q
71: TECHNOLOGY CENTER OF DALIAN CUSTOMS
72: YANG, Aifu, SUN, Jiyang, ZHENG, Qiuyue, WAN, Chao, XU, Junyi, YANG, Chunhua, JIANG, Li, LIANG, Bing
54: PRIMER AND PROBE COMBINATION FOR SIMULTANEOUSLY DETECTING THREE COMPOSITIONS OF COARSE CEREALS, KIT AND METHOD
00: -
The present invention relates to the technical field of rapid detection of compositions of coarse cereals, and particularly relates to a primer and probe for simultaneously detecting chickpeas, quinoa and coix seeds based on multiple real-time fluorescent PCR amplification, a kit and a detection method. The content of the present invention includes primer pairs and probes based on multiple real-time

fluorescent PCR amplification, compositions and concentrations of a reaction kit based on multiple real-time fluorescent PCR amplification, reaction conditions based on multiple real-time fluorescent PCR amplification, applications of the kit in actual detection and the like.

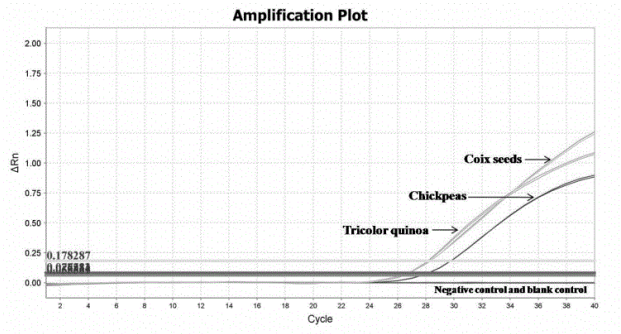

21: 2023/01553. 22: 2023/02/08. 43: 2023/05/02
51: A01C
71: Institute of Crop Cultivation and Tillage, Heilongjiang Academy of Agricultural Sciences
72: LIU, Youhong, TANG, Ao, DONG, Wenjun, MENG, Ying, ZHANG, Xijuan, WANG, Lizhi, LIU, Kai, JIANG, Shukun, YANG, Xianli, LV, Guoyi, LENG, Chunxu, LI, Kun, ZHANG, Guangchen, XIA, Tianshu, SUN, Bing, LI, Liang, SHANG, Quanyu, MA, Rui, LV, Yuping

54: RICE TRANSPLANTING DEVICE

00: -

Disclosed is a rice transplanting device. A water tank in the rice transplanting device is arranged on a dragging plate, a first end surface of a water pressing bucket in a water pressing device assembly is provided with a water input connector, a first end of a water suction pipe is connected to the water input connector, the water input connector is provided with a one-way valve plug, a second end of the water pressing bucket is an open end, a piston plate is slidably mounted in the water pressing bucket, a water output connector of the water pressing bucket is connected to a first end of a second water drainage pipe, a second end of the second water drainage pipe is arranged at a rice seedling sliding plate, and a force application end of a lever assembly is hinged to a rice transplanting handle.

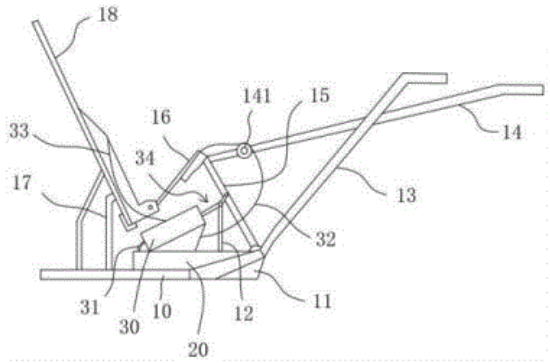

21: 2023/01554. 22: 2023/02/08. 43: 2023/05/02
51: B01J
71: Shanghai Polytechnic University
72: Wenyi YUAN, Qing HUANG, Mouyong HUANG, Fei LI, Lijun XU

54: A METHOD FOR PREPARING SIC/TIO2 BASED PHOTOCATALYST BY USING WASTE SOLAR PHOTOVOLTAIC PANEL AND A PHOTOCATALYST

00: -

The invention discloses a method and photocatalyst for preparing SiC/TiO2 based photocatalyst from waste solar photovoltaic panels, which includes the following steps: (1) preparing SiC from waste solar photovoltaic panels, (2) preparing TiO2 hydrosol from isopropanol and tetrabutyl titanate, (3) mixing SiC with TiO2 hydrosol, drying, and preparing SiC/TiO2 based photocatalyst through microwave heating. The structure of the SiC/TiO2 based photocatalyst is nano-sized fibrous SiC coated with TiO2. The method of the invention is simple in operation, can realize the in-situ recovery and recycling of waste photovoltaic silicon chips, and the prepared catalyst can also be used for the degradation of antibiotic organic pollutants in wastewater.

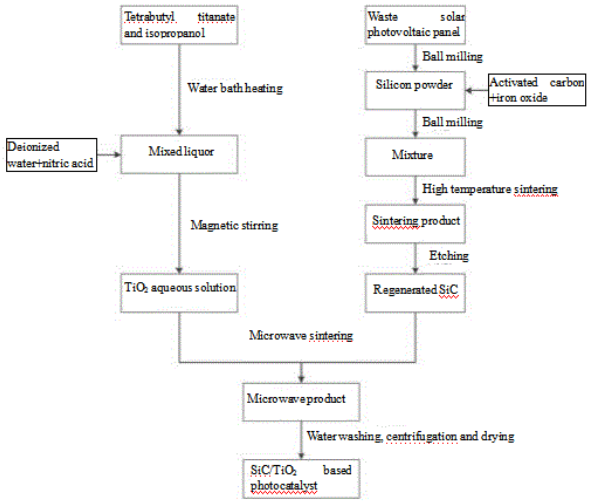

21: 2023/01555. 22: 2023/02/08. 43: 2023/05/02
51: G01N
71: Gansu Province Academy of Qilian Water Resource Conservation Forests Research Institute, Gaotai County Urban Landscaping Bureau
72: Wanqi ZENG, Xiumei YANG, Hongyan XU, Xingpeng ZHAO, Qiaoxia GUO
54: A HEAVY METAL CONTENT IDENTIFICATION DEVICE FOR FOREST ECOLOGICAL SOIL
00: -
The invention discloses a heavy metal content identification device for forest ecological soil, which comprises a box body and a rotating box cover arranged on the top of the box body. A detector body is arranged in the box body, a sample placing table is arranged in the box body and the corresponding position of the detector body, and the sample placing table above the box body is provided with an access port. The sample placing table comprises a positioning plate, an angular extrusion plate arranged vertically at the center of the positioning plate and an L-shaped clamping plate affixed to both sides of the angular extrusion plate. The bottom end of the L-shaped clamping plate is horizontally connected with the positioning plate, and the L-shaped clamping plate on both sides is connected with a tension spring. The invention adopts a heavy metal content identification device for forest ecological soil. When the sample bottle is placed on the angular extrusion plate, the angular extrusion plate moves down under the action of gravity of the sample bottle, and the L-shaped clamping plate grips the sample bottle. The clamping force is proportional to the gravity of the sample bottle, so as to avoid crushing the sample bottle with excessive holding force.

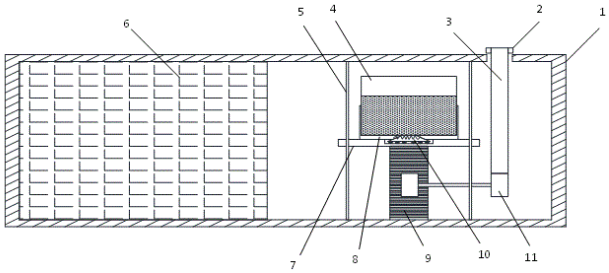

21: 2023/01556. 22: 2023/02/08. 43: 2023/05/02
51: G05B
71: Shanghai Polytechnic University
72: Wenhua ZHU, Yi ZUO, Xin LIU, Caifang ZHANG, Hongliang GU, Zhangchi SUN, Bao CAI
54: A VIRTUAL SIMULATION METHOD BASED ON PLC
00: -
The invention belongs to the field of virtual simulation digital transformation technology, which is a virtual simulation method based on PLC. The invention uses the Modbus communication mode to establish communication between PLC and the simulation engine, and performs virtual simulation according to the logic signal of PLC, to realize virtual simulation based on actual PLC. The method includes the following steps: the Portal attribute configuration, the PLC communication programming, the virtual simulation project configuration, the virtual simulation programming, and the PLC-based virtual simulation. The invention establishes a stable logical signal communication through the serial Ethernet communication protocol and solves the most critical communication problem based on physical PLC in a virtual simulation. The method is easy to understand and realize flexibly with strong application value.

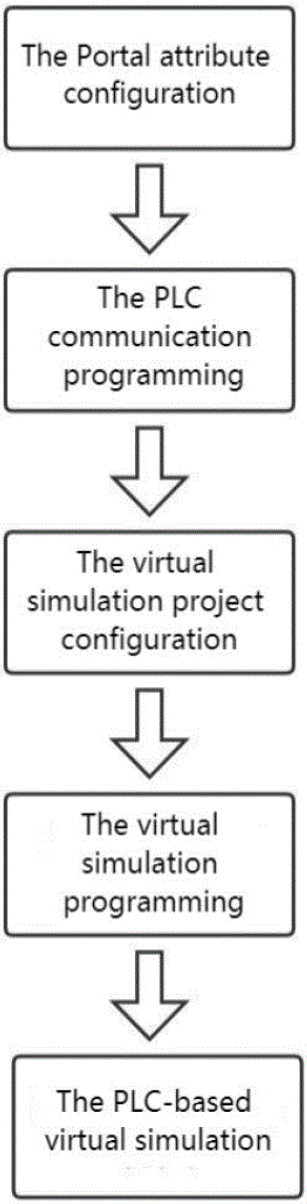

21: 2023/01557. 22: 2023/02/08. 43: 2023/05/02
51: G06F
71: YUNNAN ARTS UNIVERSITY
72: ZHU Guirong
54: INTELLIGENT DOCUMENT RETRIEVAL SYSTEM
00: -
The application discloses an intelligent document retrieval system, which comprises a keyword expansion module, a keyword processing module and a document interaction module, where the keyword expansion module is used for carrying out semantic expansion according to input keywords to obtain a semantically expanded keyword set; the keyword processing module searches and calculates according to the keyword set; the document interaction module obtains relevant documents according to the search and calculation results, and realizes document retrieval. In the application, translation is not needed in the retrieval process, thus avoiding the ambiguity of translation; And the related documents are sorted and displayed according to the calculation results, which improves the retrieval efficiency and the accuracy of cross-language document retrieval.

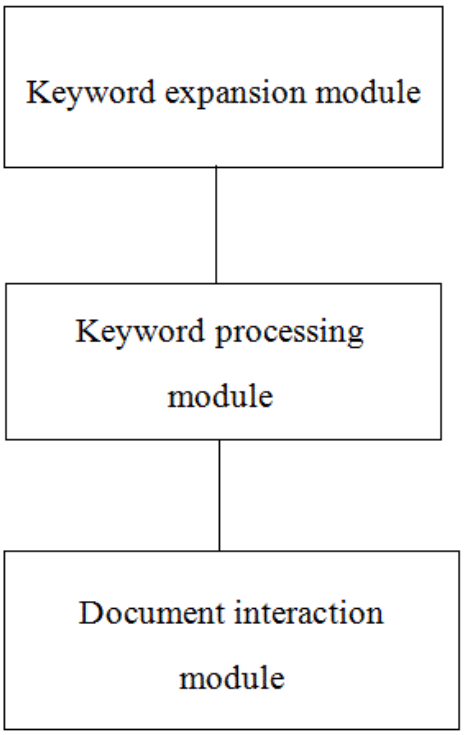

21: 2023/01558. 22: 2023/02/08. 43: 2023/05/02
51: G06F
71: YUNNAN OPEN UNIVERSITY
72: XIONG Jinquan
54: AN INTELLIGENT LIBRARY DATA MANAGEMENT SYSTEM
00: -
An intelligent library data management system comprises a book data management module, a reader data management module, an information query module and a data analysis module; the book management module is used for managing books and data; the reader data management module is used for managing the reader data; the information

query module is used for querying books and data and the reader data; the data analysis module is used to analyze the historical data of books and data inquired by readers, make statistical statements, and recommend books intelligently. Through the intelligent management of library data, this application optimizes the management of the library and makes it convenient for readers to borrow.

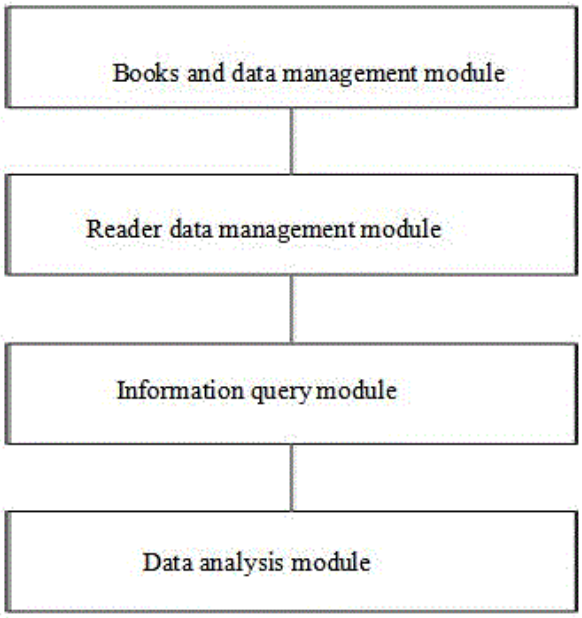

21: 2023/01559. 22: 2023/02/08. 43: 2023/05/02
51: E03B
71: Zhengzhou University of Aeronautics
72: Wei CHEN, Junfa WANG, Hongyu HAN, Yang SU, Lijuan ZHU
33: CN 31: 202320071142.1 32: 2023-01-10

54: ROOF WITH RAINWATER COLLECTION AND IRRIGATION STRUCTURE

00: -

A roof with rainwater collection and irrigation structure solves the problem that rainwater resources are wasted and easily cause rainwater to collect into puddles on the ground, bringing inconvenience to people's lives, as well as rainwater drainage pipes easily causing blockage, which includes a top platform, wherein a collection pool is buried in the top platform, a drainage pipe is fixedly connected at a bottom of the collection pool, a drainage hole connected with the collection pool is provided at a side of the drainage pipe, a positioning block is fixedly connected in the drainage pipe and is above the drainage hole, a collection tube vertically and slidingly connected to the drainage pipe is provided above the positioning block, a spring is fixedly connected between the collection tube and the drainage tube, a hollow multi-prism is connected at an upper end of the collection tube and is above the collection pool, a plurality of inlet holes is provided at a side of the hollow multi-prism, a collection main pipe is connected at a lower end of the drainage tube, and a rainwater filter and collection device is connected with at the lower end of the collection main pipe. The disclosure can avoid blockage of pipes, ensure smooth rainwater discharge, collect and reuse rainwater, avoid waste of resources and reduce the amount of rainwater on the ground.

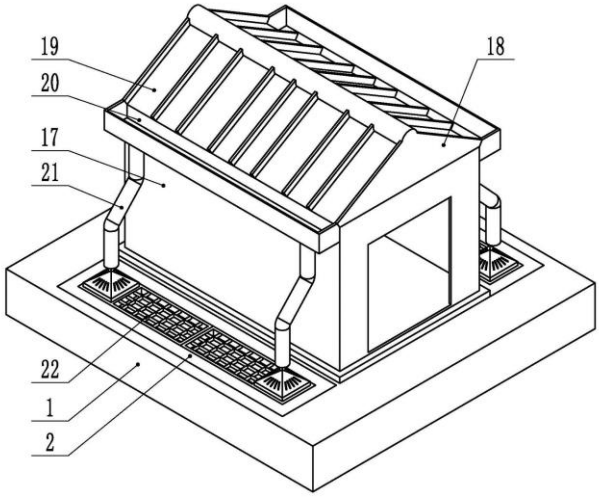

21: 2023/01560. 22: 2023/02/08. 43: 2023/05/05
51: C08J
71: Tianjin University of Science & Technology
72: ZENG Wei

54: METHOD OF PREPARING A HIGH TOUGHNESS AND HIGH RESILIENCE SILANE CROSS-LINKED POLYETHYLENE MATERIAL

00: -

The invention relates to silane crosslinked polyethylene, in particular to a method of preparing a high toughness and high resilience silane cross-linked polyethylene material. The material consists of grafting material A and catalytic material B; grafting material A comprises the following components in parts by weight: 80-90 parts of linear low density polyethylene, 10-20 parts of polyolefin elastomer, 0-5 parts of lubricant, 0.1-0.2 part of initiator, 1.0-2.4 parts of silane cross-linking agent

and 0.1-0.2 part of antioxidant, and catalytic material B comprises the following components in parts by weight: 100 parts of linear low density polyethylene, 1-2 parts of organotin, and 0.2 part of antioxidant. The material of the invention is mainly used for hot water pipes, so that the toughness and resilience of the hot water pipes are greatly improved, and excellent mechanical properties are maintained at the same time; and the processing technology and production process of the invention are relatively simple, and the production is easy to realize.

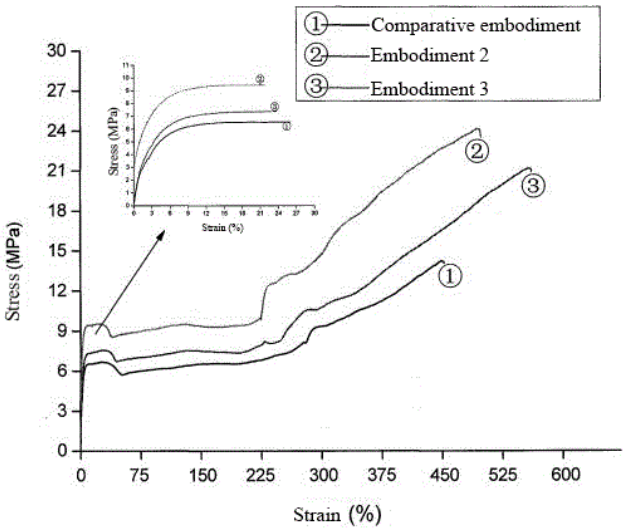

21: 2023/01561. 22: 2023/02/08. 43: 2023/05/02
51: G06K
71: Jiangsu Ocean University
72: Jinxue ZHANG, Yuxiang DOU, Tianchi ZHANG, Kai ZHOU, Huiru HAN, Yuting TANG, Linyi CHEN, Cheng SU, Jianchao YAO, Chengrong GE, Liu LIU

54: A VISUAL SCENE RECOGNITION METHOD BASED ON DEEP LEARNING

00: -

The present invention discloses a visual scene recognition method based on deep learning, comprising the following steps: step S1. obtain a scene image; step S2. input a comparison specific object image, obtain the specific object features in the scene image and its position by comparison; step S3. obtain the relationship between the specific object and the surrounding people by real-time behavior analysis The present invention uses the above-mentioned visual scene recognition method based on deep learning, using the ability of the scene image to detect and associate objects in the picture, improving the robot's understanding of the scene, which is conducive to making the robot focus on specific objects and problems in the scene.

21: 2023/01563. 22: 2023/02/08. 43: 2023/05/02
51: B07C
71: Dong Yangyang
72: Dong Yangyang

54: A CONVEYING DEVICE WITH DETECTION FUNCTION

00: -

The invention discloses a conveying device with detection function, which relates to the conveying field, including a pressing cylinder, a frame 1, and a conveying component. The pressing cylinder is fixedly connected to the frame 1, the output shaft of the pressing cylinder is provided with a sealing component, the lower part of the sealing component is provided with a conveying component, and both sides of the sealing component are provided with positioning clamping components for clamping the tank body; The sealing assembly includes a sealing cover, which is used to seal the barrel mouth. The sealing cover is equipped with an air inlet pipe and an air outlet pipe. Combining the detection function with the conveying assembly and the sorting assembly, the air tightness can be detected during the conveying process, which can better meet the requirements of automatic production; There is no need to use specific electronic sensors to detect during the detection process, and the sorting process after detection is linked with the detection, which saves the manual sorting process, has lower cost, low failure rate, and is convenient for later maintenance.

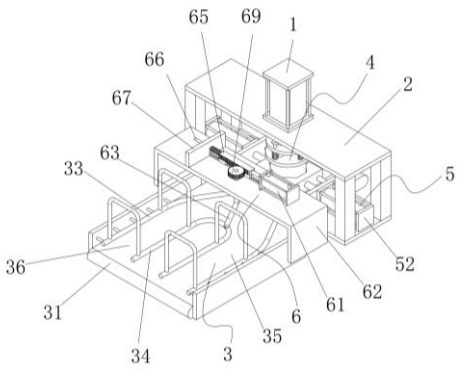

21: 2023/01564. 22: 2023/02/08. 43: 2023/05/02
51: G01N
71: Wu Helong
72: Wu Helong, Zhao Wenjuan
33: CN 31: 202211563496.4 32: 2022-12-07
54: A STRENGTH TEST DEVICE FOR ENGINEERING INVESTIGATION
00: -
The invention relates to the technical field of geotechnical detection devices, specifically a strength test device for engineering investigation, including: a base, the upper end of the base is fixedly connected with two support rods, the upper end of the support rod is fixedly connected with a driving device body, and the inner bottom wall of the base is fixedly connected with a bearing platform; A protective mechanism arranged on the surface of the base; The protective mechanism includes a protective component used to reduce personal injury during the experiment, a cleaning component is arranged at the inner side of the protective component, and a triggering component is arranged at one end of the cleaning component; By setting protective components in the device, the device can achieve the effect of protecting the operators during the test under the action of protective components, and protect the personal safety of the operators in the case of splashing of impurities in the sauce burning gravel.

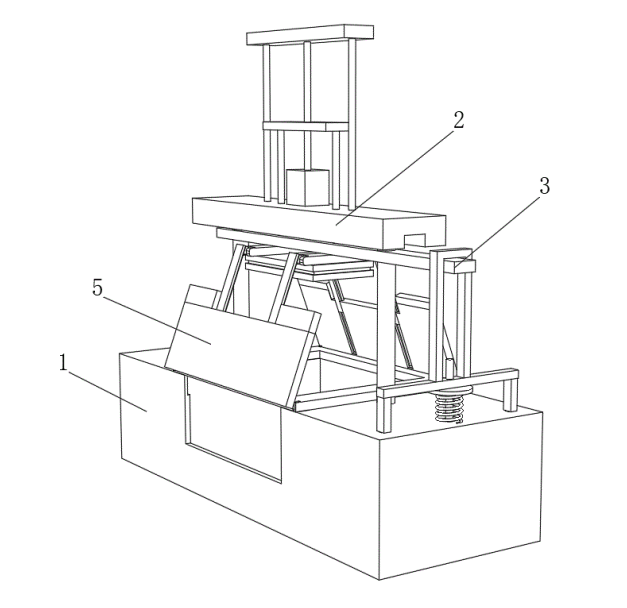

21: 2023/01565. 22: 2023/02/08. 43: 2023/05/02
51: B08B
71: Yang Lili
72: Yang Lili, Fu Lingling
33: CN 31: 202211624685.8 32: 2022-12-16
54: A METAL BUILDING MATERIAL PROCESSING FORGING FRAME
00: -
The invention discloses a metal building material processing and forging frame, which relates to the technical field of forging, including the lower base and cross beam. In the invention, the rear side of the vertical beam of the frame is provided with a side baffle, which can prevent the scale and dust diffusion range. The upper baffle set on the upper side of the dust inlet hole through the side baffle can limit the suction range of the dust suction pump, so that the dust suction pump can effectively absorb the scale and dust, The dust collection box is detachably connected to the lower base. It can take down the dust collection box when it is full, and pour out the oxide scale and dust in the dust collection box. It can collect and process the oxide scale and dust on the rack in time.

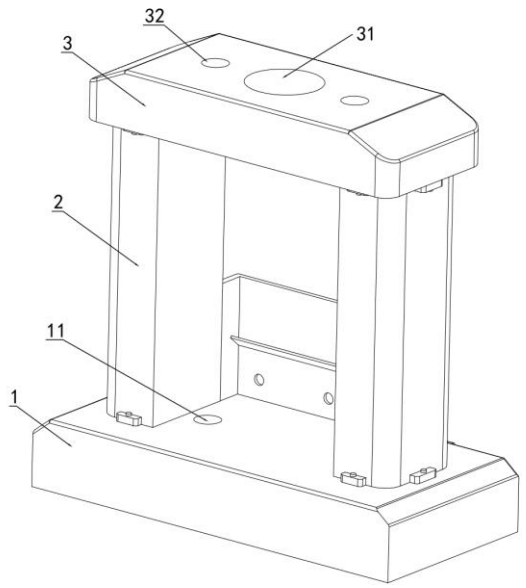

21: 2023/01566. 22: 2023/02/08. 43: 2023/05/02
51: B65D
71: Chuzhou Jincheng Metal Products Co., Ltd
72: Dai Linhui, Zhang Lei, Li Bangfu, Yang Shusheng, Ding Zhongjian
33: CN 31: 202211626897.X 32: 2022-12-16
54: A TELESCOPIC GUARDRAIL
00: -
The invention discloses a telescopic guardrail, which relates to the field of guardrail devices, including a fixed frame, a telescopic frame and a telescopic rod group. The outer side of the fixed frame is provided with a connecting component, the connecting component is connected to the external column and can automatically reset the fixed frame, the telescopic frame is connected in the fixed frame by sliding, and one end of the telescopic rod group is fixedly connected to the telescopic frame, The other end is slidably connected in the fixed frame. The position where the telescopic rod group is connected with the fixed frame is provided with a sealed sleeve. The sleeve is connected with an air blowing component. The air blowing component is used to clean the telescopic rod group. The outer side of the telescopic frame is also provided with a hook I and a hook II. The hook II is provided with a blocking plate component. The invention is intended to cooperate with the fixed frame by setting a retractable telescopic frame, The length of the guardrail can be adjusted within the scope, so that the same set of guardrail can meet the installation of more guardrail doors with different requirements.

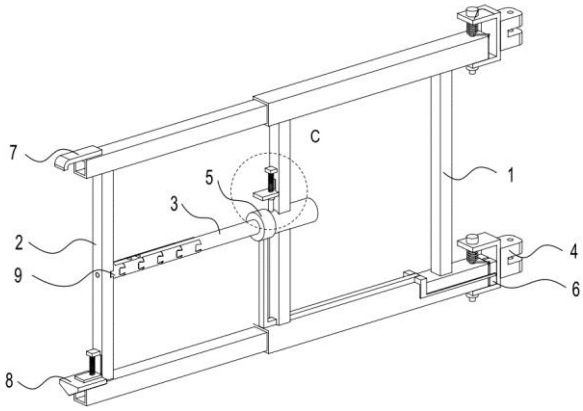

21: 2023/01567. 22: 2023/02/08. 43: 2023/05/02
51: G01N
71: Wu Helong
72: Wu Helong, Zhao Wenjuan
33: CN 31: 202211598151.2 32: 2022-12-12
54: A GEOTECHNICAL SAMPLING DEVICE
00: -
The invention relates to the technical field of soil sampling equipment, in particular to a rock and soil sampling device, which comprises: an electric soil sampler; Bulldozer, which can quickly push the rock and soil from the inside of the electric sampler, is installed on the upper end of the electric sampler, and the lower end of the bulldozer penetrates into the inside of the electric sampler; By setting the bulldozer, when the staff need to take out the rock and soil inside the electric sampler, the staff only need to connect the T-shaped adjusting rod with the piston rod through the connecting mechanism, and then the staff can unlock the positioning mechanism to make the piston rod lose resistance, the staff can push the piston rod down through the T-shaped adjusting rod, and the piston rod will push out the rock and soil inside the electric sampler, This not only enables the staff to take out the sampled rock and soil conveniently and quickly, but also does not disturb the samples, resulting in the mixing of rock and soil samples at different levels, so as to reduce the difficulty of subsequent detection.

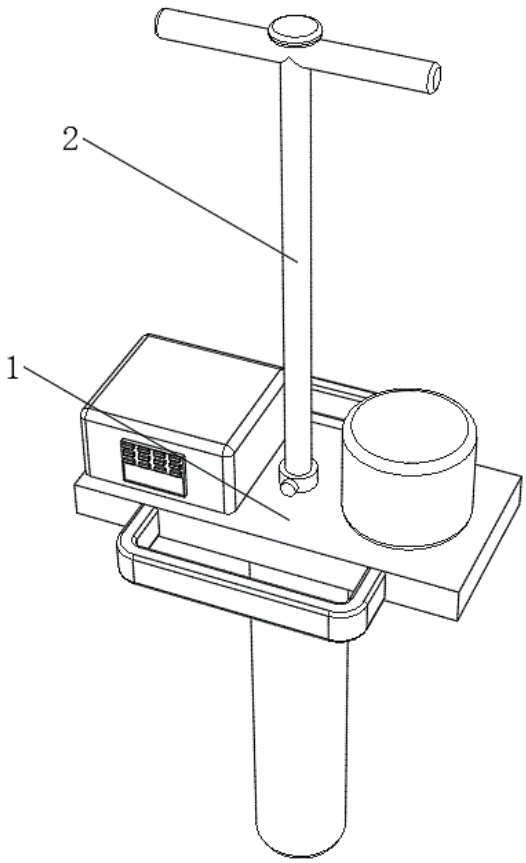

21: 2023/01568. 22: 2023/02/08. 43: 2023/05/02
51: B23K
71: Zhengzhou Research Institute of Mechanical Engineering Co., Ltd., China Academy of Machinery Ningbo Academy of Intelligent Machine Tool Co., Ltd., Jiangsu University of Science and Technology
72: Yuanxun Shen, Mingyuan Zhao, Jinfeng Geng, Xiupeng Li, Datian Cui, Quanbin Lu, Juan Pu, Shuiqing Wang, Yunfeng Chang, Long Fu
33: CN 31: 202211717355.3 32: 2022-12-29
54: A BRAZING MATERIAL FOR COPPER-ALUMINUM FLAME BRAZING, PREPARATION METHOD AND APPLICATION THEREOF
00: -
The invention belongs to the technical field of copper-aluminum dissimilar metal brazing materials, in particular relates to a brazing material for copper-aluminum flame brazing and a preparation method and application thereof. Brazing material for copper-aluminum flame brazing of the present invention consists of the following mass percentage components: 15-20% Al, 1-3% Mn, 0.5-1.5% Sr, and the allowance is Zn. The brazing material for brazing copper-aluminum flame brazing can improve the oxidation resistance of brazing filler metal and fine the brazing structure of brazing filler metal. Brazing material is used for copper-aluminum flame brazing, which can improve the oxidation resistance of brazing filler metal and refine the structure of brazing filler metal. It can effectively improve the mechanical strength of copper-aluminum dissimilar metal joints when used in flame brazing. The shear strength of brazed copper-aluminum joints is 95.2-105.3MPa. It has a good application prospect in the field of brazing copper-aluminum joint.

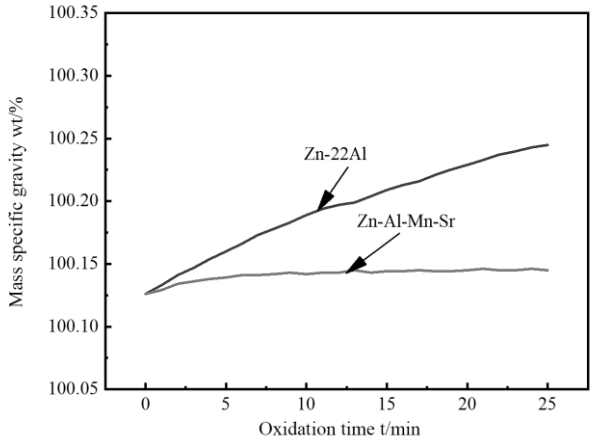

21: 2023/01571. 22: 2023/02/08. 43: 2023/05/02
51: C08B
71: Ningxia Wuxing Science and Technology Co. Ltd., North Minzu University
72: Jianbao Ding, Jin Yang, Xianjie Hou, Wenjun Zeng, Zhenyu Wang, Yanping Li, Hao Wang
54: METHOD FOR PREPARING ANTIOXIDATIVE EXTRACT OF FRUCTUS LYCII AND APPLICATION THEREOF
00: -
The present invention belongs to the technical field of natural drug extract preparation and relates to a method for the preparation of extract of fructus lycii and its application. In the present invention, the extract of fructus lycii is successfully prepared by crushing, water extraction, concentration, alcohol precipitation, recovery of ethanol and drying of fructus lycii. The method specifically comprises the following steps: adding water into the coarse powder of fructus lycii and extracting for 2-3 times at 70-90 °C and 2 h each time, filtering the extracting solution, and combining and concentrating the filtrate to 1.05-1.11°Bé (50°C); adding 95% ethanol to the

concentrated solution at a rate of 20-40 mL-1•min-1•kg-1 till the alcohol content reaches 50%, standing still at 10-30°C for 12-48 h, and separating the supernatant; and recovering ethanol from the supernatant and concentrating same to 1.05-1.14°Bé (50°C), and drying to obtain the fructus lycii extract. The extract has health-care functions of antioxidation, assisting in reducing blood sugar, immunity enhancement, and the like. The preparation method is simple, efficient and cost effective.

21: 2023/01574. 22: 2023/02/08. 43: 2023/05/02
51: C09K
71: Shandong Aipu Electric Equipment Co., Ltd. Jinan High-tech Branch, Shandong University
72: Renfeng YUE, Xuezhong FAN, Zhengfang WANG, Jing WANG, Shengli HAN, Yuanbin LIU, Yuhai ZHANG, Jinzhong ZHENG, Jianjun LIU, Bo LIU, Hequan LI

54: INTELLIGENT LEASING MANAGEMENT SYSTEM FOR BOX-TYPE SUBSTATION EQUIPMENT AND WORKING METHOD THEREOF

00: -

The present disclosure provides an intelligent leasing management system for box-type substation equipment and working method thereof. The system includes: a remote measurement and control terminal device, a 4G/GPRS wireless communication module and a client platform. The remote measurement and control terminal device is a key unit of the intelligent management system for the box-type substations, is installed in a substation site, and is mainly composed of an embedded system, an environment temperature sensor, an environment humidity sensor, an arc light detection sensor, a switch contact temperature detection sensor and a Beidou/GPS dual-mode positioning and timing module; the 4G/GPRS wireless communication module is connected with the remote measurement and control terminal device through an interface; and the client platform manages a plurality of box-type substations, and sends data or a control instruction to the remote measurement and control terminal device through the 4G/GPRS wireless communication module. The intelligent leasing management system of the present disclosure solves the problems that during leasing of the box-type substations, the equipment operates in an overload manner, users change use places at will, and the users do not return the substations in time in expiration of the lease.

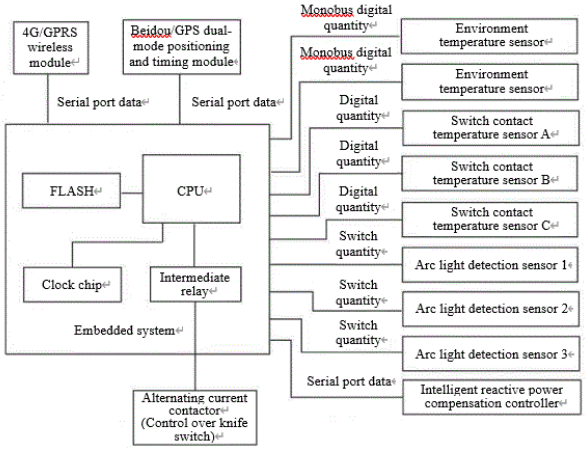

21: 2023/01597. 22: 2023/02/08. 43: 2023/04/13
51: G08B; G16H; H04W
71: SHENZHEN JUCIYUN TECHNOLOGY CO., LTD.
72: GUO, LINGYUN
33: CN 31: 202010684290.1 32: 2020-07-16

54: EMERGENCY WARNING AND ASSISTANCE PROVIDING SYSTEM AND METHOD

00: -

An emergency warning and assistance providing system and method. The system comprises a first user terminal, a guard platform and a second device terminal. The first user terminal automatically performs monitoring and raises an alarm, and can quickly provide the location of the first user terminal, the location of the second device terminal and information of first-aid devices and/or first-aid materials when an emergency occurs, such that people surrounding the first-aid devices know that someone nearby needs assistance. The guard platform unlocks the first-aid devices and/or the first-aid materials in the second device terminal and instructs the surrounding people to go to the site as soon as possible to provide assistance within a golden assistance period. By means of the system and method, the technical problem in the prior art of it not being possible to provide immediate assistance due to the poor timeliness and low accuracy of information transmission when an emergency occurs is solved.

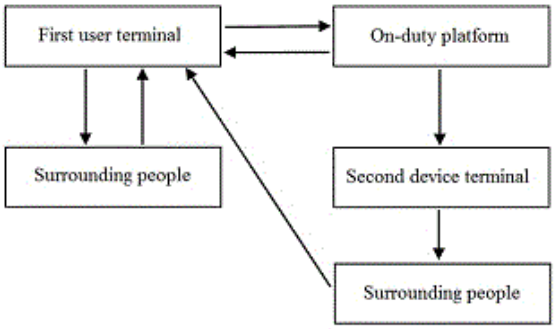

21: 2023/01598. 22: 2023/02/08. 43: 2023/04/13
51: G07C; G08B; H04N
71: SHENZHEN JUCIYUN TECHNOLOGY CO., LTD.
72: GUO, LINGYUN
33: CN 31: 202010684977.5 32: 2020-07-16
54: SMART MULTIFUNCTIONAL KEY DOOR VIEWER BOX AND SYSTEM
00: -
A smart multifunctional key door viewer box, comprising a box body, a warning module (1-1), an identification module (1-2), an instruction receiving module (1-3), a storage sensing module (1-4), an on/off module (1-5), an audio and video module, and a power supply module (1-8). The smart multifunctional key door viewer box is used for solving the problem in the existing technology in which current key boxes still focus on key storage, and smart key boxes are not convenient for rescuers in case of an emergency in the home. Further provided is a system comprising a smart multifunctional key door viewer box, and the system is used to solve a series of problems, such as people in the surrounding area not knowing when an emergency occurs in the home, and if only a patient is at home, even if rescuers arrive in time, the rescuers cannot enter smoothly because of a door lock, and breaking in also delays the rescue time.

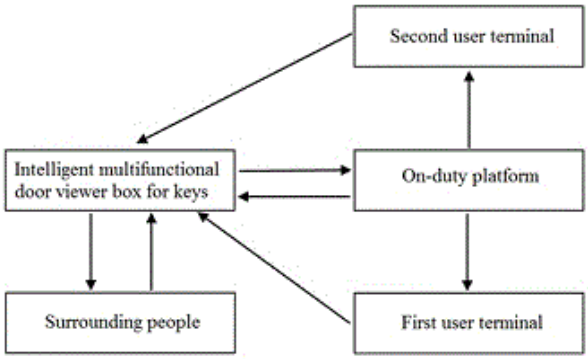

21: 2023/01599. 22: 2023/02/08. 43: 2023/04/13
51: H04W; G08B
71: SHENZHEN JUCIYUN TECHNOLOGY CO., LTD.
72: GUO, LINGYUN
33: CN 31: 202010686762.7 32: 2020-07-16
54: EMERGENCY RESCUE SYSTEM
00: -
An emergency rescue system, comprising: a user terminal, a device terminal, and a monitoring platform, wherein the user terminal is used for sending a rescue request to the monitoring platform when a carrier has an emergency. The rescue request comprises physical sign information and geographical location of the carrier. The monitoring platform is used for determining the type of the emergency on the basis of the physical sign information of the carrier after receiving the rescue request, selecting a device terminal according to the geographic location of the carrier, and sending a rescue instruction to the selected device terminal. The device terminal is used for prompting, after receiving the rescue instruction, that an emergency has occurred. By using the above-mentioned technical solution, when a patient cannot seek help by himself/herself, a rescue procedure is started to inform surrounding rescue personnel of the physical sign information and geographic location of the patient, open doors for the rescue personnel, and provide basic rescue guidance and task assignment for the rescue personnel, thereby making full use of the optimal period of time for critical care.

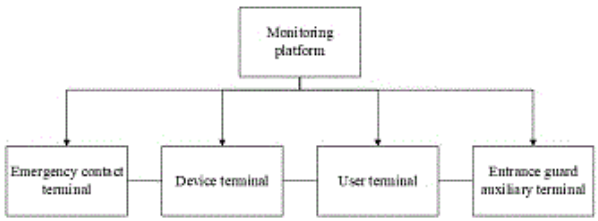

21: 2023/01611. 22: 2023/02/09. 43: 2023/05/02
51: G01N
71: Chinese Research Academy of Environmental Sciences
72: ZHANG, Qiuying, LI, Zhao, GAO, Hongjie, LIU, Jia, LI, Fadong, QIAO, Yunfeng, LENG, Peifang, TIAN, Chao
54: DETECTION SYSTEM AND METHOD OF GREENHOUSE GAS EMISSIONS OF SEDIMENT AND WATER BODY
00: -
Disclosed is a detection system of greenhouse gas emissions of sediment and a water body, including a closed sampling device, a constant-temperature control device and a mechanical arm running control device. The closed sampling device includes a TGA (Thermo Gravimetric Analysis) system, a sealed box and a sealing cover. The constant-temperature control device includes a constant-temperature water tank. A top of the sealed box is provided with an opening. An edge of the opening is provided with a flexible protective sleeve. A multi-parameter sensor and a gas inlet needle are arranged on the sealing cover. The gas inlet needle is connected to the TGA system. A gas extracting pump extracts gas in the sealed box into the TGA system for analysis. The mechanical arm running control device is connected toto the sealing cover and is used for controlling running of the sealing cover.

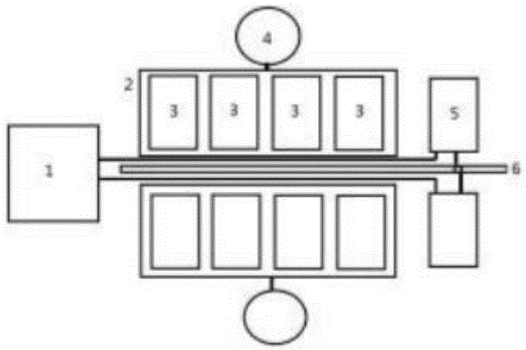

21: 2023/01612. 22: 2023/02/09. 43: 2023/05/02
51: E04G
71: Chuzhou Jincheng Metal Products Co., Ltd
72: Dai Linhui, Zhang Lei, Li Bangfu, Yang Shusheng, Ding Zhongjian
33: CN 31: 202211613303.1 32: 2022-12-15
54: A SPECIAL-SHAPED VERTICAL POLE
00: -
The invention discloses a special-shaped upright pole, which relates to the technical field of scaffold, including bearing square steel, cast steel joint and anti-twist component, bearing square steel is bolted up and down, cast steel joint is fixedly connected to the side end of bearing square steel, the side end of cast steel joint is provided with a slot, the cast steel joint is inserted with a pin, and the pin is provided with a rivet below the cast steel joint. In this invention, the torsional component is installed at the side end of the bearing square steel, and the cast steel joint with slots is arranged. In case of occasional cracking and disconnection, the torsional bearing square steel drives the cast steel joint at the side end to rotate within the range of the concave guide rail on the transition disc until the side end of the cast steel joint touches the corresponding convex position, blocking the continuous torsion of the bearing square steel trend, and ensuring the structural stability of the scaffold, Avoid potential safety hazards caused by chain distortion.

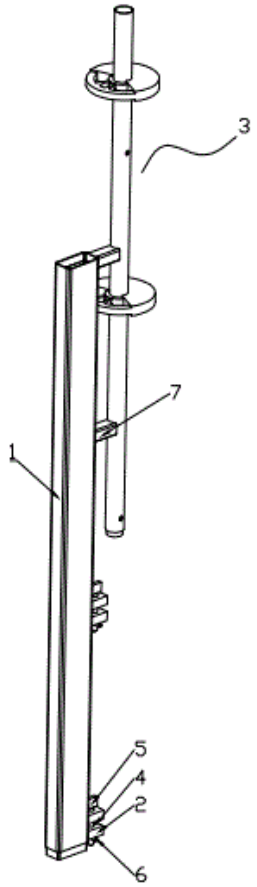

21: 2023/01613. 22: 2023/02/09. 43: 2023/05/02
51: C04B
71: Zhengzhou University of Aeronautics
72: ZHU Qian, LI Han, SHI Ke, GUAN Qiaoyan, XIE Xiaopeng
54: RECYCLED AGGREGATE CONCRETE AND PREPARATION METHOD THEREOF
00: -
The invention discloses a recycled aggregate concrete and a preparation method thereof, and relates to the technical field of concrete preparation. The raw materials of recycled aggregate concrete are composed of 165-170 parts of water, 250-280 parts of cement, 30-40 parts of carbide slag, 700-800 parts of iron tailings, 1,000-1,050 parts of waste concrete and 3-4 parts of water reducer. The aggregate of the invention adopts all industrial solid wastes, which can solve the problems of shortage of natural resources and storage of construction waste and industrial waste. Combining iron tailings with waste concrete and carbide slag can obtain concrete with higher strength and better high temperature resistance. The recycled aggregate concrete prepared by the invention is expected to be used in building structures with fire protection requirements, such as boiler rooms and steel mills. The raw material composition of the invention is simple, the process steps are simple, and the prepared recycled aggregate concrete has high strength and good high-temperature stability, which has a wide application prospect and is suitable for large-scale industrial production.

21: 2023/01614. 22: 2023/02/09. 43: 2023/05/02
51: F04B
71: Shenyang University of Technology
72: GUO, Zhongfeng, FU, Xiaohan
54: SELF-BALANCING MANIPULATOR
00: -
The invention relates to the technical field of production equipment and proposes a self-balancing mechanical arm. The utility model comprises a base and a first driving part arranged on the base. The boom mechanism is rotationally connected with the base, and the first driving part is used to drive the boom mechanism to rotate around the first axis. The boom mechanism includes a rotating shaft. The second drive component is used to drive the rotating shaft to rotate around the second axis. The jib mechanism comprises a mounting base, a second driving part and a four-link mechanism. The second driving part is used to drive the four-link mechanism to swing around the third axis. The counterweight mechanism and the jib mechanism are respectively located at both ends of the boom mechanism. The counterweight mechanism consists of a motor, a linear module and a counterweight block. The motor drives the linear module to move to adjust the position of the counterweight block. The controller is connected with the motor. The controller is used to control the motor operation according to the weight of the jib mechanism and the weight of the counterweight to adjust the position of the counterweight. This application can effectively reduce the vibration of the equipment during rotation, and improve the system stability and control accuracy.

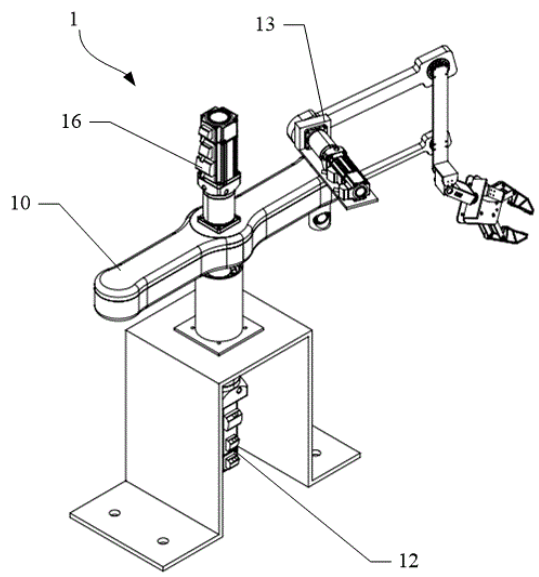

21: 2023/01616. 22: 2023/02/09. 43: 2023/05/02
51: A61K; C12N; A61P
71: Zhejiang University
72: WANG, Kai, XU, Yili, CHEN, Ran
33: CN 31: 202211400311.8 32: 2022-11-08
54: USE OF MICRO RIBONUCLEIC ACID (MIRNA) COMBINATION AS A BIOMARKER IN PREPARATION OF REAGENT OR KIT FOR DIAGNOSING LUNG CANCER AND/OR EVALUATING PROGNOSIS OF LUNG CANCER
00: -
The present disclosure provides use of a micro ribonucleic acid (miRNA) combination as a biomarker in preparation of a reagent or a kit for diagnosing lung cancer and/or evaluating prognosis of lung cancer, which belongs to the technical field of biochemistry. In the present disclosure, a lung cancer-related target miRNA is selected from miRNAs with an up-regulated expression level of lung cancer, and query is conducted using a miRmine miRNA expression database; meanwhile, miRNAs known to be highly expressed in the blood of the general population are excluded, and miRNAs with no or an extremely-low expression level in the blood of the general population are selected. Under the premise that targets are independent with a specificity of 100%, through the parallel combined detection of seven targets with an average sensitivity of 14.3%, 100% specificity and sensitivity can be achieved theoretically.

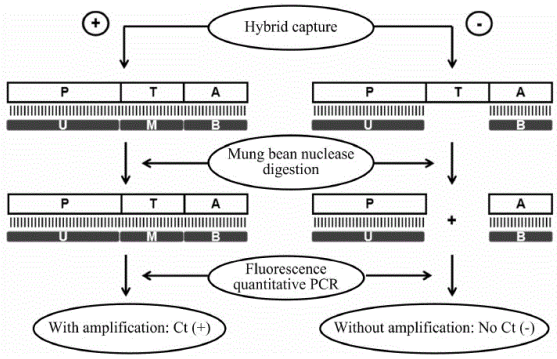

21: 2023/01617. 22: 2023/02/09. 43: 2023/05/02
51: C08J
71: Guizhou Yishengyuan Technology Co.
72: Wenjing ZHANG, Xiaonan LIU, Jinhui XIE, Yu XUE, Meng PEI, Daohai ZHANG, Yuhuan XU
54: PHOTOCONVERSION AGING RESISTANT FOG-DROP RESISTANT POLYETHYLENE FILM AND PREPARATION METHOD THEREOF
00: -
The invention relates to a photoconversion aging resistant and fog-drop resistant polyethylene film and a preparation method thereof, belonging to the field of thin-film materials. The photoconversion aging resistant and fog-drop resistant polyethylene film and its preparation method are, by weight, 80-100 copies of polyethylene matrix, 10-30 copies of metallocene linear polyethylene base material, 0.01-3 copies of red orange photoconversion agent, 0.01-3 copies of blue light conversion agent, 0.5-5 copies of doped nano titanium dioxide, 0.5-5 copies of lubricant, Glycerol monate 0.3-3 parts, antioxidant 0.1-5 parts, UV absorbent 0.1-1 parts. The photoconversion antiaging antifogging polyethylene film has the functions of light conversion, aging resistance, antifogging and so on, and regulates the various properties of the photoconversion antiaging antifogging polyethylene film.

21: 2023/01618. 22: 2023/02/09. 43: 2023/05/02
51: G02B
71: Guizhou FST Chemical Material Technology Co.
72: Wenjing ZHANG, Lei ZHANG, Jinhui XIE, Meng PEI, Yu XUE, Xiaonan LIU, Daohai ZHANG, Yuhuan XU
54: TRANSPARENT PET/PETG INFRARED ABSORPTION COMPOSITE MATERIAL, PREPARATION METHOD AND APPLICATION THEREOF
00: -

The invention relates to a transparent PET/PETG infrared absorption composite material and a preparation method thereof. In particular, it relates to a transparent and high-performance PET/PETG composite material and its products, which are composed of polyethylene terephthalate (PET), polyethylene terephthalate -1, 4-cyclohexane dimethyl ester (PETG), infrared absorbent smoothing agent, compatibilizer, nucleating agent and antioxidant. Transparent and high performance PTE composite products including bottles, packaging cans, bags, boxes and so on are prepared by processing technology. The product consists of polyethylene terephthalate (PET) 50-90wt%, polyethylene terephthalate -1, 4-cyclohexane dimethyl alcohol (PETG) 50-90wt%, infrared absorbent 0.5-5%, smoothing agent 0.01-5wt %, compatibilizer 1-10wt%, nucleating agent 0.5-5wt%, Antioxidant 0.1-1wt%.

21: 2023/01619. 22: 2023/02/09. 43: 2023/05/02
51: C08J
71: Guizhou Yishengyuan Technology Co.
72: Wenjing ZHANG, Xiaonan LIU, Daohai ZHANG, Meng PEI, Yu XUE, Lei ZHANG, Yuhuan XU
54: THE INVENTION RELATES TO A LOW-COST BIODEGRADABLE FILM AND A PREPARATION METHOD THEREOF
00: -
The invention relates to a low-cost biodegradable film and a preparation method thereof, belonging to the field of biodegradable materials. The low-cost biodegradable film and its preparation method are composed of 70-90 parts of biodegradable polymer matrix, 10-40 parts of food grade agricultural waste, 10-30 parts of quality modification agent, 1-10 parts of organic decomposition bacteria, 1-5 parts of nucleating agent and 0.1 to 5 parts of antioxidant by weight. The low-cost biodegradable film can be completely degraded, which solves the problem of plastic recycling. Various properties of the low-cost biodegradable film can be adjusted through the ratio of raw materials.

21: 2023/01620. 22: 2023/02/09. 43: 2023/05/02
51: C08L
71: Guizhou FST Chemical Material Technology Co.
72: Wenjing ZHANG, Lei ZHANG, Jinhui XIE, Meng PEI, Yu XUE, Yuhuan XU, Daohai ZHANG
54: GREEN LOW CARBON BRIGHT COLOR POLYESTER COMPOSITE MATERIAL AND PREPARATION METHOD AND APPLICATION THEREOF
00: -
The invention relates to a green low carbon bright color polyester composite material and a preparation method thereof, in particular to a green low carbon bright color polyester composite material made from PET resin, nucleating agent, antioxidant, carbonized docking titanium particle and polymer compound stabilizer. Through processing technology to prepare green low-carbon color bright polyester composite products including bottles, films, bags, boxes or packaging cans. The composite material of this product is composed of PET resin, nucleating agent, antioxidant, titanium particles of carbonization dock, polymer stabilizer, including PET resin 70-90wt%, nucleating agent 0.1-5wt%, antioxidant 0.1-1wt%, tungston-titanium carbide particles 0.05-1wt%, The stabilizer of polymer compound accounts for 0.01wt %-1% of the total amount of composite material.

21: 2023/01621. 22: 2023/02/09. 43: 2023/05/02
51: G01N
71: YELLOW SEA FISHERIES RESEARCH INSTITUTE
72: YANG Qian, QU Keming, ZHANG Yan, ZHOU Mingying, YANG Shu, SUN Yao
54: DEVICE CAPABLE OF DETERMINING HEAVY METAL CONTENT OF ATMOSPHERIC DEPOSITION IN SEDIMENTS BY LAYERS
00: -
The invention provides a device capable of determining the atmospheric deposition heavy metal content in sediments in layers, which comprises a supporting platform, a deposition column, a tray, a lifting device and a rubber pad, wherein both ends of the deposition column are open and vertically placed on the supporting platform, and the upper end of the deposition column is fixedly connected with the four corners of the supporting platform through deformable connectors; the tray is position at that lower part of the deposition column, the out diameter of the tray is equal to the inner diameter of the deposition column, and the lower part of the tray is fixedly connected with the lifting device; the lifting device is arranged below that supporting platform; a rubber pad is arranged between the lifting device and the ground. According to the invention, the

sediments in the deposition column can be layered, so that the layering is more accurate; the slow lifting instrument is connected to facilitate manual control of the layering, and the determination result can intuitively reflect the heavy metals in the sediments.

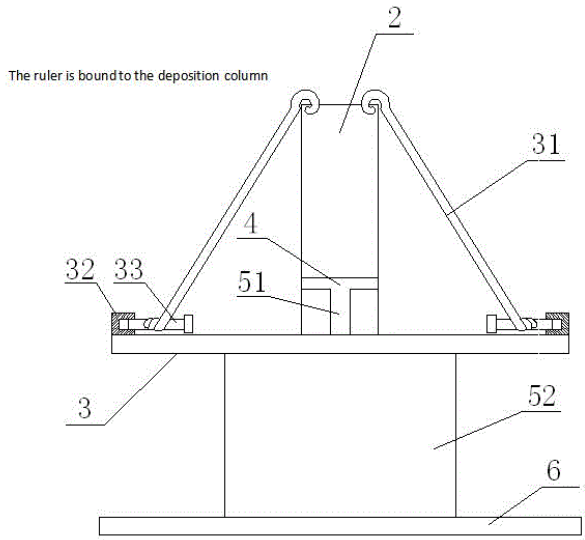

21: 2023/01622. 22: 2023/02/09. 43: 2023/05/02
51: A47K
71: Zaozhuang Vocational College
72: Hu Li, Rong Chen, Changyan Liu, Yingying Li, Xin Han, Liang Li, Fei Sun
33: CN 31: 202223318512.1 32: 2022-12-08
54: A PEDESTAL PAN DEVICE FOR THE ELDERLY WITH BUFFER FUNCTION
00: -
The invention provides a pedestal pan device for the elderly with buffer function, which relates to the technical field of the elderly daily articles. It relates to a pedestal pan device for the aged with buffering function. The utility model comprises a pedestal pan body, a toilet seat and a buffer component, the toilet seat is arranged at the opening of the pedestal pan body, the buffer component comprises a plurality of elastic expansion components, a plurality of elastic expansion components are evenly spaced between the toilet seat and the pedestal pan body, one end of any elastic expansion component is connected with the pedestal pan body, the other end is connected with the toilet seat. When the elderly use the toilet, sit down and stand up, the toilet that specially designed for elderly can effectively cushion the buttocks, can be more convenient for the elderly to use the toilet, can avoid sitting process is easy to the elderly hip and lumbar impact injury.

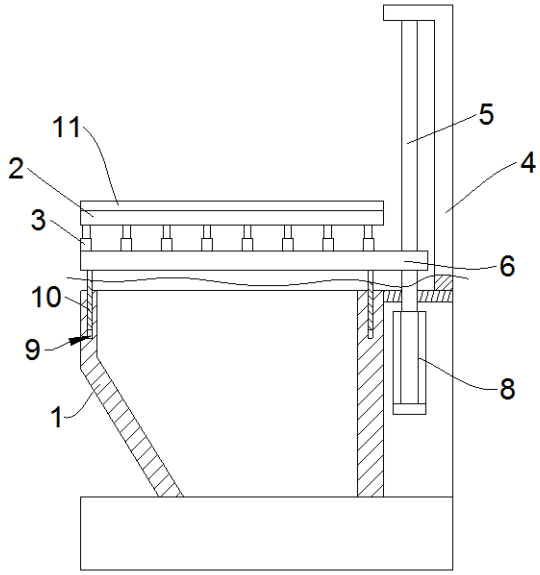

21: 2023/01630. 22: 2023/02/09. 43: 2023/05/12
51: G06Q
71: Dr. Suman Majumder, Dr. Krishnarti De
72: Dr. Suman Majumder, Dr. Krishnarti De
54: SUSTAINABLE ELECTRIC BUS BASED TRANSIT SYSTEM FOR MANAGING TRANSPORTATION AND SUPPLY POWER TO ELECTRIC BUSES
00: -
The present invention discloses sustainable electric bus based transit system (100) for managing transportation and supply power to electric buses, it including: a plurality of Electric Bus Stops (EBS) (102) including a Fuzzy Logic Controller (FLC) unit (104) and a plurality of control units (106), wherein the FLC unit (104) is configured to provide control signals to the plurality of EBS (102); a Transportation Communication Centre (TCC) unit (108) to connect the plurality of control units (106) to a communication network; a plurality of solar panels (110) to generate power from sunlight, wherein the plurality of solar panels (110) is connected to a plurality of batteries (114) through a distribution grid unit (112) for storing generated energy; and an array of sensors (116) to detect fault in the electric bus, location of the electric bus, battery status of the electric bus and temperature of the electric bus's battery.

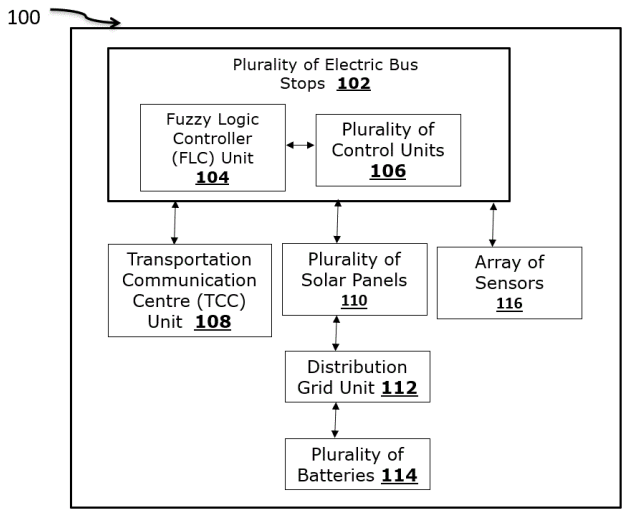

21: 2023/01631. 22: 2023/02/09. 43: 2023/05/12
51: B01F
71: Jilin jianzhu University
72: Zhu Fu, Tian Wei, Wang Yan, Zhang Wanxi, Dong Weizhi, Chai Yuan, Liu Hantao, Chen Guangyi, Zhang longfei

54: A RAW MATERIAL PREPARATION DEVICE FOR MIXING CHROMIUM FREE ZINC ALUMINUM ANTI-CORROSION COATING FOR TRAFFIC STEEL COMPONENTS

00: -

The invention relates to the technical field of raw material preparation devices, and discloses a raw material preparation device for mixing chromium free zinc aluminum anti-corrosion paint for traffic steel members.The utility model comprises a fixed base, a support base is arranged above the fixed base, the top of the support base is movably sleeved with a brewing box, the top of the brewing box is symmetrically and fixedly connected with two mounting frames, the inside of the two mounting frames are provided with a quantitative proportioning component, the quantitative proportioning component includes a feeding box, a first discharge pipe, a baffle plate, a second discharge pipe, two push rods and two through holes, and the bottom end of one side of the brewing box is fixedly connected with a discharge pipe, A mixing component is arranged between the fixed base and the brewing box.The raw material preparation device for the mixing of chromium free zinc aluminum anti-corrosive coating for traffic steel components, through the design of quantitative mixing component and mixing component, realizes the rotation in opposite directions between two stirring rod and the brewing box, avoids the problem of mixing dead angle in the brewing box, and ensures the mixing preparation effect.

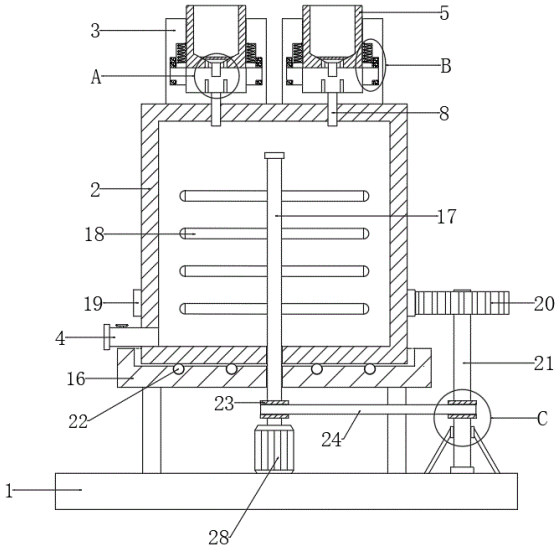

21: 2023/01632. 22: 2023/02/09. 43: 2023/05/12
51: G06K
71: Dr. Sujata Alegavi, Dr. Bhushankumar P. Nemade, Dr. Vinayak Ashok Bharadi, Dr. Archana Belge
72: Dr. Bhushankumar P. Nemade, Dr. Sujata Alegavi, Dr. Vinayak Ashok Bharadi, Dr. Archana Belge

54: A HYBRID SYSTEM FOR CLASSIFICATION AND RETRIEVAL OF HYPERSPECTRAL IMAGES

00: -

The present disclosure relates to a hybrid system for classification and retrieval of hyperspectral image. The system mainly includes two units, a training and label processing unit; and a testing and retrieval processing unit. The proposed system is implemented in MATLAB 2018 using hybrid MS-MA BT-MSCLBP, modified DeepIRDI (Image Registration Using Deep Convolutional Features and Dynamic Inlier Selection) algorithm with Deep Neural Network for feature extraction and classification using NVIDIA GPU with Compute Unified Device Architecture (CUDA). Maximum accuracy has been achieved as a result of the relevant feedback. The experimental findings from diverse datasets are analyzed to demonstrate that this technique can

achieve higher classification accuracy than other standard strategies.

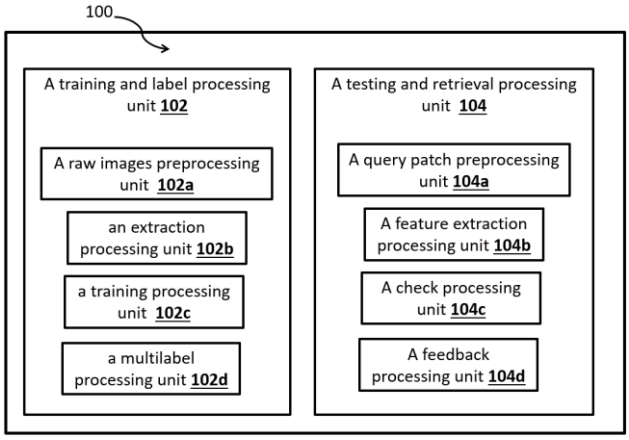

21: 2023/01633. 22: 2023/02/09. 43: 2023/05/02
51: A61K
71: Dr. Kumaraswamy Gandla, Dr. Anna Balaji, Dr. Neerugatti Dora babu, Lalitha Repudi, Dr. Archana S. Patil, Imad Raouf Zahreddine, Dr.Qutaiba Abdulkareem Qasim
72: Dr. Kumaraswamy Gandla, Dr. Anna Balaji, Dr. Neerugatti Dora babu, Lalitha Repudi, Dr. Archana S. Patil, Imad Raouf Zahreddine, Dr.Qutaiba Abdulkareem Qasim

54: SOLID LIPID NANOPARTICLES FOR TARGETTED DRUG DELIVERY

00: -

The invention discloses solid lipid nanoparticles for targeted drug delivery and method of preparation. The solid lipid nanoparticle comprises of a drug; glyceryl tripalmitate; and tyloxapol. The drug is clotrimazole. The present invention utilizes hot homogenization method for formulating solid lipid nanoparticle for targeted drug delivery, which improves the solubility and bioavailability of the drugs. The percentage of incorporated drug in the lipid matrix i.e. the entrapment efficiency was evaluated. Incorporation of clotrimazole as drug led to high entrapment efficiency. This can be attributed to its lipophilic character. The results of the in vitro release studies to evaluate controlled release of the drug indicated that release rate decreases for solid lipid nanoparticle with a higher lipid concentration. Figure 1 shall be reference figure.

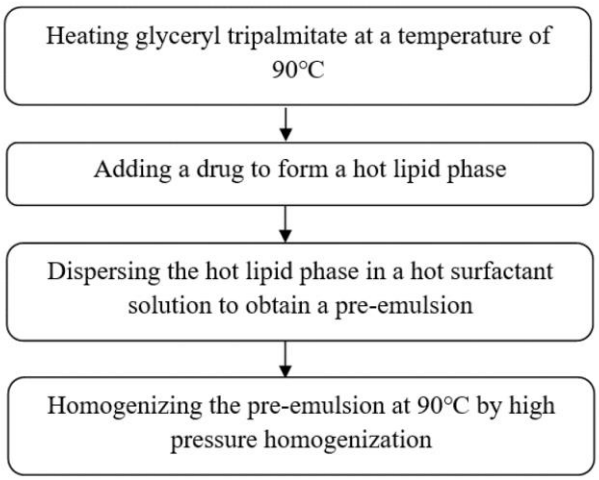

21: 2023/01652. 22: 2023/02/10. 43: 2023/04/12
51: E01D
71: Fujian University of Technology, Fuzhou Jingyan engineering technology co., ltd, Fujian Rongsheng Municipal Engineering Co.,Ltd.
72: LIN Shangshun, LIN Yongjie, JI Bangchong, YE Shiji, CHEN Zhixiong, GUO Xing, LIN Yulian

54: SPLICING STRUCTURE OF PREFABRICATED PIER

00: -

The invention discloses a splicing structure of prefabricated pier, which comprises a bearing platform and a prefabricated pier; a concrete-filled steel tube tenon is arranged on the platform of the bearing platform, and the concrete-filled steel tube tenon comprises a steel tube stiffening rib which is arranged around the bottom end of the concrete-filled steel tube tenon; the bottom of the prefabricated pier is provided with a mortise matched with a concrete-filled steel tube tenon, and the concrete-filled steel tube tenon extends into the mortise to connect the bottom of the prefabricated pier. The invention adds a concrete-filled steel tube tenon and a steel tube stiffening rib around the platform of the bearing platform, which can directly restrain and position the prefabricated pier during construction, prevent the prefabricated pier from suddenly tilting during construction, and improve the construction efficiency and safety.

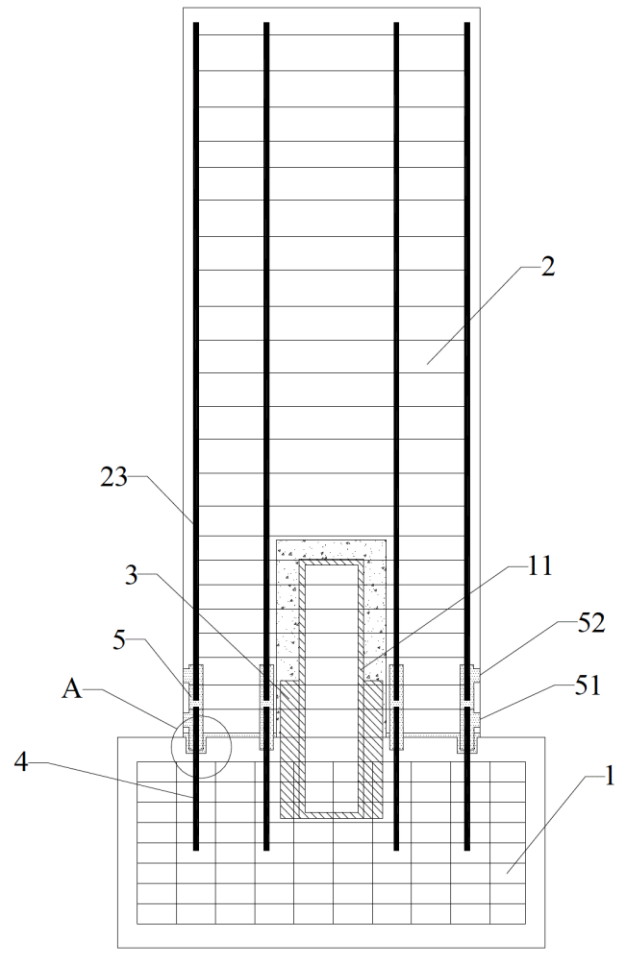

21: 2023/01662. 22: 2023/02/10. 43: 2023/04/12
51: E04B
71: Hunan City University
72: WANG Xinzhong, XIONG Bing, LIN Long, LI Yang, CHEN Shangkang, HE Wenjie, XU Qing
54: PVC PIPE-CONFINED BASALT FIBER CONCRETE COLUMN AND PREPARATION METHOD THEREOF
00: -
The invention discloses a PVC pipe-confined basalt fiber concrete column, which comprises a first PVC pipe, where a reinforcing cage is arranged in the first PVC pipe, and a first basalt fiber concrete layer is poured in the first PVC pipe; the second PVC pipe is sleeved outside the first PVC pipe, and a second basalt fiber concrete layer is poured between the inner wall of the second PVC pipe and the outer wall of the first PVC pipe; a plurality of reinforcing ribs penetrate that side wall of the first PVC pipe, one end of the reinforcing ribs is connected with the reinforcing cage, and the other end of the reinforcing ribs extends into the second basalt fiber concrete layer. The invention can achieve better bearing capacity performance through the restraint and protection of the PVC pipe on the concrete column, and at the same time, the PVC pipe is used to delay the fall of the protective layer of the steel bar of the concrete column, and the corrosion resistance of the PVC pipe itself and the crack resistance and corrosion resistance of basalt fiber concrete are used to improve the durability of the concrete column.

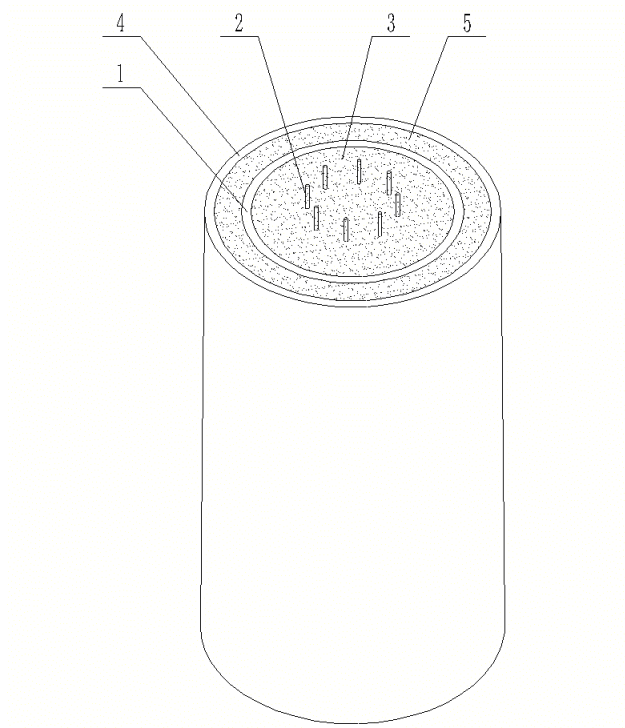

21: 2023/01666. 22: 2023/02/10. 43: 2023/04/12
51: E01D
71: Fujian University of Technology, Fujian Rongsheng Municipal Engineering Co.,Ltd., Fuzhou Jingyan engineering technology co., ltd
72: LIN Shangshun, LIN Yongjie, CHEN Zhixiong, GUO Xing, LIN Yulian, LIN Xin
54: PREFABRICATED ASSEMBLED PIER WITH TENON-MORTISE CONNECTION
00: -
The invention discloses a prefabricated assembled pier with tenon-mortise connection, which is characterized by comprising a prefabricated bearing platform and a prefabricated pier, wherein the prefabricated bearing platform comprises a plurality of steel bars which are vertically and horizontally distributed in the prefabricated bearing platform; the

top surface of the prefabricated bearing platform is provided with tenon on which steel pipes are installed; the peripheral surface of the extending end of the steel pipes is provided with a plurality of through holes; the steel bars penetrate through the through holes; and the bottom surface of the prefabricated pier is provided with a concave mortise. The tenon and concave mortise are matched. The two opposite sides of the tenon are also depressed inward to form sub-mortise; a sub-tenon matched with the sub-mortise is formed at the inner side of the concave mortise. Through the reasonable arrangement of tenon and concave mortise positions and the matching between them, the construction difficulty is reduced and the structural strength is improved; through the matching between the steel pipe of tenon and the steel bar of prefabricated bearing platform, the structural strength of tenon is ensured, and then the stability of the structure after tenon and concave mortise are ensured.

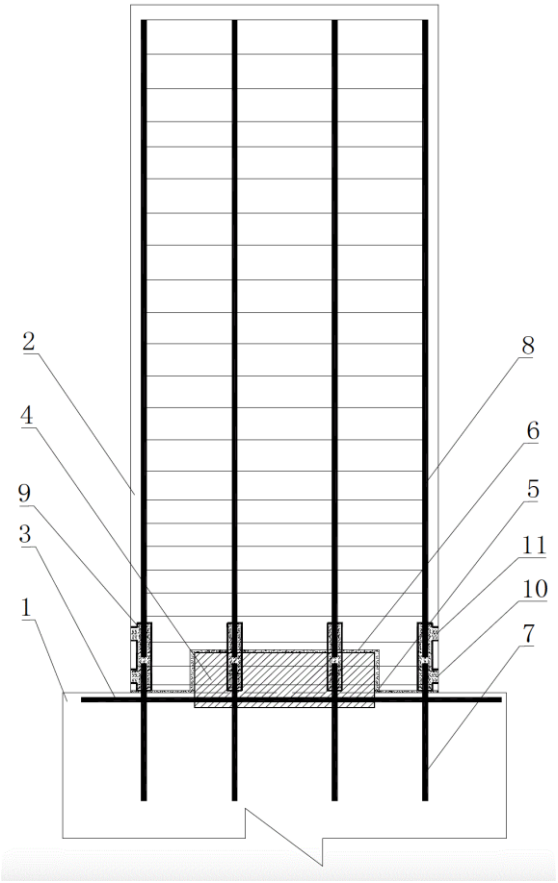

21: 2023/01712. 22: 2023/02/13. 43: 2023/04/12

51: G06F
71: Henan University of Urban Construction
72: DONG Zhaofeng, WANG Li, JIA Junli, ZHANG Xiaoyu, WANG Di, ZHANG Xiangyu, LI Bing

54: INTERACTIVE PRACTICE ROBOT FOR MEMORIZING WORDS

00: -

The application discloses an interactive practice robot for memorizing words, which comprises a humanoid robot shell, a biometric identification system, an interactive system and a teaching system; biometric identification system, interactive system and teaching system are integrated in the humanoid robot shell; the biometric identification system is used for acquiring the biometric information of the users and controlling the robot to wake up based on the biometric information; the interactive system is used for receiving user instructions and interacting based on the user instructions; the teaching system is used to provide word teaching and testing, and generate word test reports. The touch screen of that application can play the language teach video and test the word, the voice interactive module can receive and analyze the voice information of the user and make corresponding responses, and can also teach the word by playing foreign language audio and prompts, so that word teaching can be carried out in various forms, which can attract children's attention, better mobilize children's learning enthusiasm and further improve the quality of language teaching.

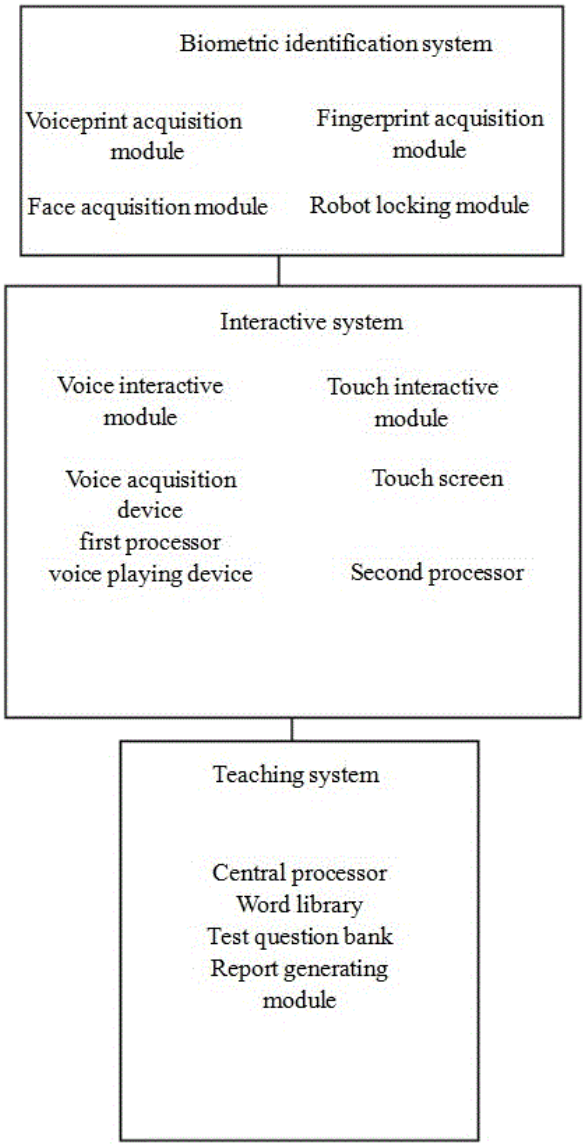

21: 2023/01721. 22: 2023/02/13. 43: 2023/04/12
51: C01B
71: TAIYUAN UNIVERSITY OF TECHNOLOGY
72: ZHANG Guojie, WU Xinyang, LIU Jun, LI Guoqiang, WANG Ying, ZHAO Yuqiong, ZHANG Yongfa, ZHANG Riguang, WANG Baojun, ZHANG Yunfei
54: FLUIDIZED BED MEMBRANE REACTOR FOR METHANE AUTOTHERMAL REFORMING WITH INTEGRATED CO2 CAPTURE
00: -
The invention discloses a fluidized bed membrane reactor for methane autothermal reforming with integrated CO2 capture, which comprises a reactor main body; an oxygen separation zone, which relates to a ceramic membrane module for oxygen separation; a methane combustion zone, divided into a combustion raw material mixing zone and an oxidation heating zone; a methane reforming zone, divided into a reforming raw material mixing zone and a reforming hydrogen production zone; a hydrogen separation zone, which relates to a palladium-based membrane module for hydrogen separation; it also includes gas conduits for conveying gas. The reactor uses the combustion of methane to provide heat for reforming reaction, which reduces the external heat supply. In addition, it uses membrane separation technology to produce high-purity hydrogen and capture high-purity carbon dioxide.

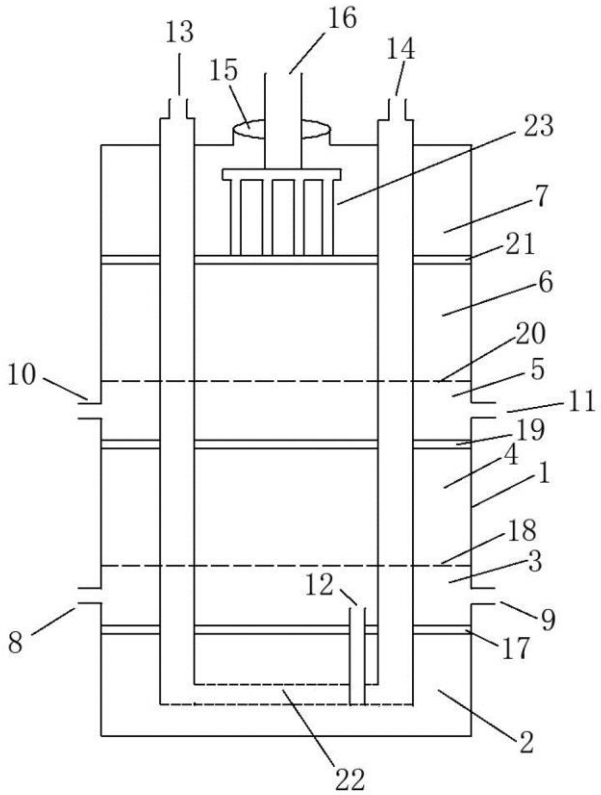

21: 2023/01722. 22: 2023/02/13. 43: 2023/04/12
51: G06F
71: XINJIANG INSTITUTE OF ECOLOGY AND GEOGRAPHY, CHINESE ACADEMY OF SCIENCES
72: YOU Yuan, ZHOU Na, WANG Yongdong
54: DESERT ECOLOGICAL ANALYSIS SYSTEM
00: -
The invention discloses a desert ecological analysis system, which comprises a data acquisition module,

a data monitoring module, a data evaluation module and a data trend prediction module; the data acquisition module is use for acquiring data of dominant environmental problem and characteristic data of ecological ontology; the data monitoring module is used for monitoring the dominant environmental problem data and the ecological ontology characteristic data to obtain an evaluation index; the data evaluation module is used for establishing a corresponding ecosystem evaluation system based on the evaluation index; the data trend prediction module is used to predict the future trend of the ecosystem according to the ecosystem evaluation system. The invention realizes intelligent remote sensing evaluation and future trend prediction of desert ecosystem, and the evaluation and trend prediction results are accurate and reliable, and can be repeatedly operated.

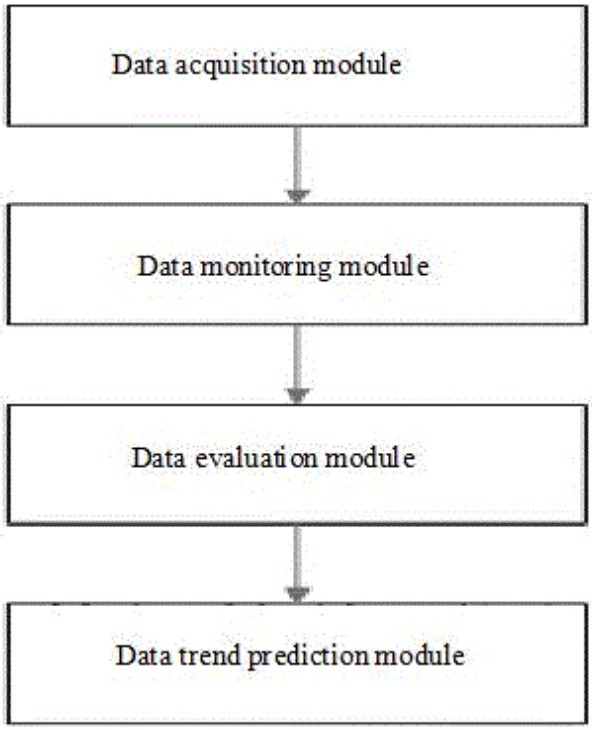

21: 2023/01723. 22: 2023/02/13. 43: 2023/04/12
51: F16J
71: Jiangsu Institute of Marine Resources Development(Lianyungang)
72: LIU Chengwen, BAO Encai, ZHANG Haitao, WANG Luyao, WANG Yanfeng, LIU Guoliang, DU Yuling
54: SEALING STRUCTURE
00: -

The invention discloses a sealing structure, which is arranged at the connection position between the box body and the box cover of an electric sealing box and is used for sealing the electric sealing box, and comprises an upper sealing ring, wherein the upper sealing ring is arranged in a rectangular structure and is matched with an upper annular groove formed on the bottom surface of the box cover; the two sides of the bottom of the upper sealing ring are respectively fixedly connected with sealing washers; the two sides of the bottom of the upper annular groove are respectively provided with sealing grooves; the two sealing washers are respectively matched with sealing grooves; the bottom surface of the upper sealing ring is provided with annular grooves; the lower sealing ring is arranged in a rectangular structure, and is matched with a lower annular groove arranged at the opening of the box body, the bottom surface of the lower annular groove is fixedly connected with an annular block, the bottom surface of the lower sealing ring is provided with a clamping groove which is matched with the annular block, the top of the lower sealing ring is provided with an annular protrusion, the outer wall of the annular protrusion abuts against the inner wall of the annular groove, and two sides of the lower sealing ring are respectively abutted with two sealing washers. The invention can increase the sealing area and improve the sealing effect.

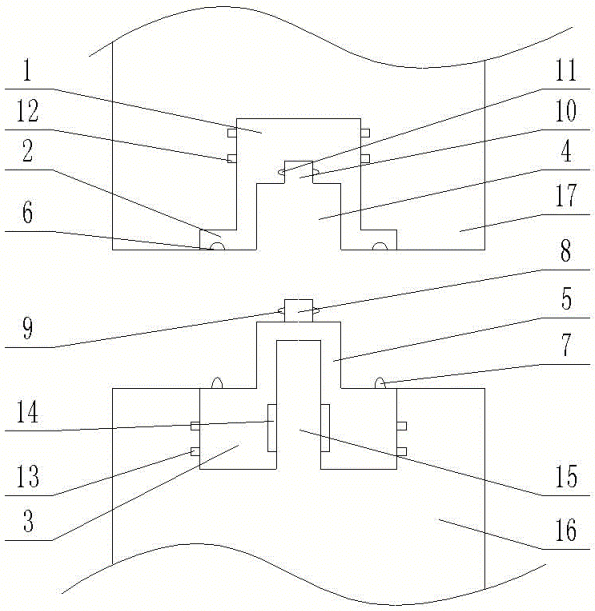

21: 2023/01727. 22: 2023/02/13. 43: 2023/04/12
51: B60S; G06Q
71: Shenyang University of Technology
72: TANG Fei
54: EMERGENCY SUPPORT SYSTEM FOR SPECIAL VEHICLES BASED ON DIGITAL TWIN TECHNOLOGY
00: -
The application discloses an emergency support system for special vehicles based on digital twin technology, which comprises a model building module, a data acquisition module, a model base management module, a three-dimensional model dynamic module, a digital twin model building module, a monitoring module and a decision-making module; the model building module is used for building a static three-dimensional model of the target special vehicle; the data acquisition module is used for acquiring real-time data of the target special vehicle; the model management library module is used for managing static three-dimensional models; the three-dimensional model dynamic module is used to realize dynamic modeling and dynamic display of the working process of the target special vehicle to obtain a dynamic three-dimensional model; the digital twin model building module is used for building a twin digital model based on the dynamic three-dimensional model and the target special vehicle; the monitoring module is used for real-time monitoring the target special vehicle based on the twin digital model to obtain the monitoring result; When the monitoring result is abnormal, the decision-making module is used to send alarm information and issue support instructions.

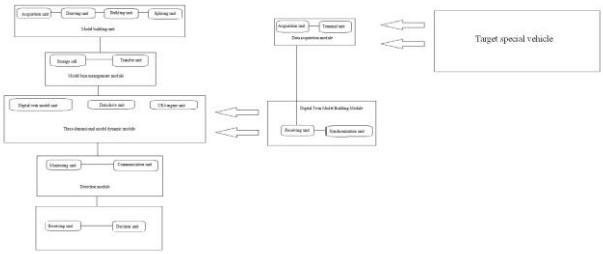

21: 2023/01761. 22: 2023/02/14. 43: 2023/05/05
51: C08L
71: Taiyuan University of Technology, Lvjian Sports Industry Technology (Shanxi) Co.
72: Yanlong MA, Jingxin ZHU, Wensen ZHAO, Lan JIA, Lingjie LIANG, Yaodong ZHANG
54: A KIND OF RUBBER FLOOR PAVING TILE AND ITS PREPARATION METHOD
00: -
The invention discloses a rubber floor paving tile and its preparation method, including polymer material residue and adhesive and curing agent; polymer material residue includes: ethylene propylene rubber particles, rubber residue strips after vulcanization, polyurethane elastomer residue strips, polyurethane anti-vibration material residue particles, one or more of waste rubber particles; adhesive is polyurethane polymerized from polyisocyanate, polyether diol, polyether triol prepolymer; the curing agent is water. The invention uses the above-mentioned rubber floor tile and its preparation method, using waste rubber particles as filling materials, reducing costs without reducing performance; all rubber particles are used, facilitating water permeability; the use of MDI is less toxic than TDI, the prepared adhesive is a solvent-free product, no VOC emissions, production and use of more environmentally friendly.

21: 2023/01762. 22: 2023/02/14. 43: 2023/05/02
51: B01F
71: AFFILIATED HOSPITAL OF WEIFANG MEDICAL UNIVERSITY
72: JI Yinghui, BAI Farui, LI Min
54: PORTABLE CLINICAL PHARMACY DISPENSING DEVICE
00: -
The invention discloses a portable clinical pharmacy dispensing device. A heating plate is fixedly connected in a box body, and the heating plate divides the box body into a stirring cavity and a liquid storage cavity; two groups of stirring components are rotatably connected in the stirring cavity; both the two groups of stirring components are connected with a driving component in a transmission way; the driving component is used to control the rotation of the stirring component; the driving component is fixedly connected with the top surface of the box body; the top surface of the box body is detachably connected with a liquid inlet component and a crushing component; the liquid inlet component is used for controlling the flow rate of liquid medicine; the crushing component is used for crushing solid pills; and the driving component is arranged between the liquid inlet component and the crushing component, and the outer wall of the box body is

rotatably connected with a handle. According to the invention, the flow rate of the liquid medicine can be controlled through the liquid inlet component, and the solid pills can be crushed through the crushing component, so that the crushed pills enter the stirring cavity, and at the same time, the mixed liquid medicine can be heated during the stirring process through the heating plate.

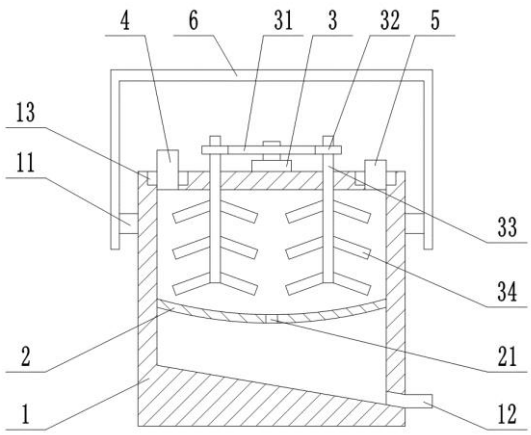

21: 2023/01763. 22: 2023/02/14. 43: 2023/05/02
51: E01C
71: Harbin Institute of Technology, Changchun Jianye Group Co.
72: Long WANG, Fengxia JIANG
54: A KIND OF ROAD INORGANIC BONDED BASE MATERIAL ANTI-SCOURING TEST EQUIPMENT AND EVALUATION METHOD
00: -
The present invention discloses a road inorganic bonded base material scour resistance test apparatus and evaluation method, including a cover plate, a base sink, a rotating blade, a motor and a test piece cover. The cover plate is pressed on the base sink. The cover plate is provided with an outer circular hole and a central circular hole. The body of the base sink is a hollow cylindrical sink. The upper end of the base sink is provided with an outer edge, and the inside of the base sink is provided with a test piece holding table. The test piece holding table is fixed to the base sink. The upper part of the rotating blade is connected to the motor, and the lower part of the rotating blade is fixed on the base sink. The motor is placed on the upper side of the central round hole of the cover plate, and the test piece cover is fixed on the cover plate. The present invention uses the above-mentioned a road inorganic bonded subgrade material anti-scouring test equipment and evaluation method to reduce the cost of the test device, conduct the test of multiple specimens at the same time, improve the test efficiency and compare the experimental results to increase the reliability.

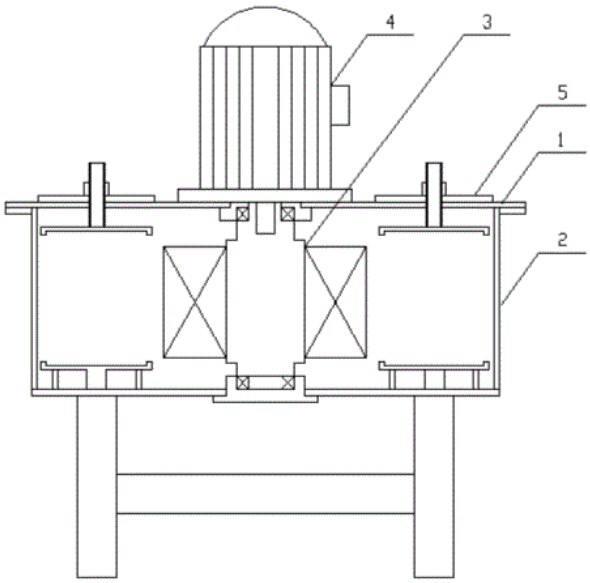

21: 2023/01764. 22: 2023/02/14. 43: 2023/05/02
51: E01C
71: Harbin Institute of Technology, Changchun Jianye Group Co.
72: Long WANG, Fengxia JIANG
54: A ROAD COMPACTION UNIFORMITY DETECTION AND EVALUATION METHOD BASED ON PFWD
00: -
The invention discloses a road compaction uniformity detection and evaluation method based on PFWD. The steps are as follows: road section selection and measurement point arrangement, using PFWD to track and test the road section to be evaluated, and get the Evdi of different testing points; calculate the mean value and standard deviation S of the deformation modulus of the evaluated section, and draw the three-dimensional surface of the plane position and Evd of each testing point; according to the statistical analysis results of Evd, calculate the upper and lower confidence interval boundaries of the deformation modulus Evd; take the upper and lower confidence interval as the reference plane, cut the three-dimensional surface of Evd, and project the Evd contour, calculate the area of qualified area Sh, area of all areas Sq, uniformity

t; according to the assessment criteria, make uniformity assessment; make a decision on the weak area of roadbed compaction, and make up compaction quickly according to the location of the weak area. The above-mentioned PFWD-based road compaction uniformity detection and evaluation method is used in the present invention to realize systematic, rapid and non-destructive evaluation of road compaction quality, and to change from "point" to "surface" evaluation.

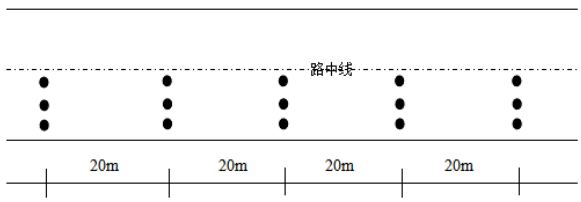

21: 2023/01765. 22: 2023/02/14. 43: 2023/05/02
51: G01N
71: North China University of Technology
72: ZHU Zhaoyang, ZHANG Bo, QIAN Wei, DAI Jian
54: DEVICE SUITABLE FOR SHORT-TERM ADHESIVE PERFORMANCE EXPERIMENT OF OLD TIMBER AND FRP SHEET
00: -
The invention relates to a device suitable for short-term adhesive performance experiment of old timber and FRP sheets, which belongs to the the field of restoration and reinforcement of timber structures of ancient buildings. The test piece for short-term adhesive performance is that the surface of FRP sheet is embedded in the old timber test block. The test piece is fixed by the limiting displacement bracket, and the extended FRP sheet in the specimen is firmly connected with the clamp. The clamp is dragged by the jack to slide slowly on the track composed of steel balls, so that the FRP sheet is pulled out of the old timber block, and the relevant force data is recorded simultaneously with the acquisition instrument.

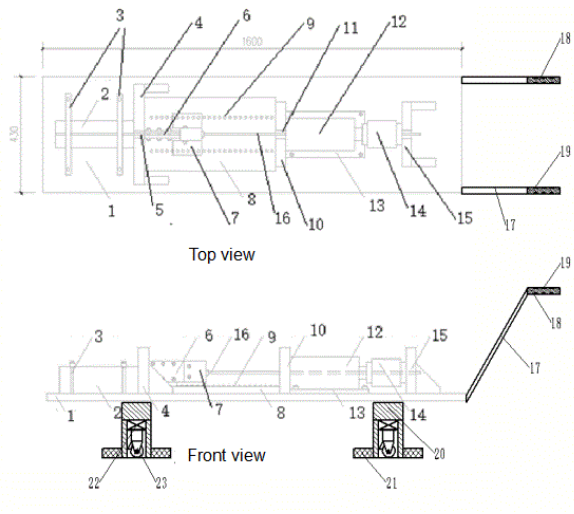

21: 2023/01767. 22: 2023/02/14. 43: 2023/05/05
51: G01B
71: Research Institute of Non-timber Forestry, Chinese Academy of Forestry
72: ZHAO, Han, ZHU, Jingle, LI, Hui, TANG, Jun, ZHOU, Zongshun, YANG, Xia, CHEN, Mengjiao, HUANG, Lin, QIN, Yue, ZUO, Siyu, LIU, Yaxin, ZHANG, Wan, QIAO, Yongsheng
54: METHOD FOR DISTINGUISHING QUERCUS VARIABILIS FROM QUERCUS ACUTISSIMA
00: -
A method for distinguishing Quercus variabilis from Quercus acutissima is provided.

(Figure 1)

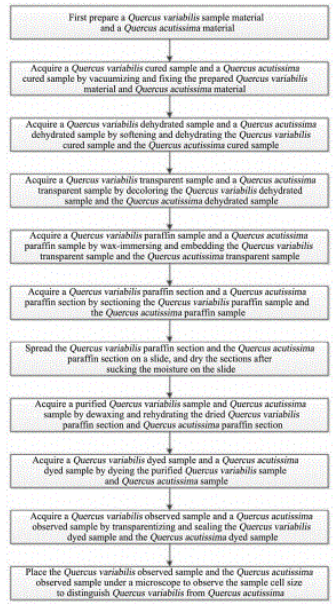

21: 2023/01768. 22: 2023/02/14. 43: 2023/05/05
51: A01G
71: Research Institute of Non-timber Forestry, Chinese Academy of Forestry
72: ZHAO, Han, ZHU, Jingle, ZHOU, Zongshun, FAN, Wei, ZHAI, Lihai, LI, Hui, HUANG, Lin, QIN, Yue, ZUO, Siyu, CHEN, Mengjiao, REN, Yue, NIU, Xinjiang

54: TREATMENT METHOD FOR IMPROVING REGENERATION EFFICIENCY OF QUERCUS ROBUR TISSUE CULTURE

00: -

The present invention provides a treatment method for improving regeneration efficiency of Quercus robur tissue culture.

(Figure 1)

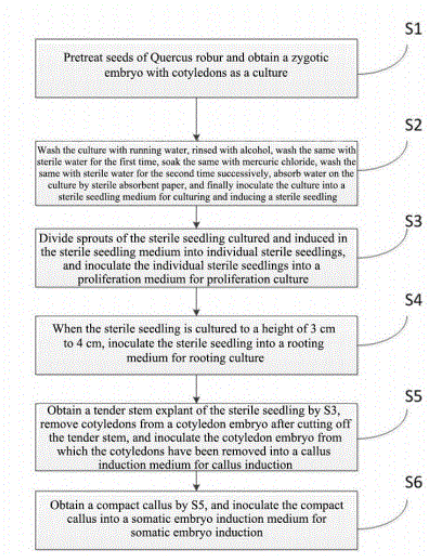

21: 2023/01769. 22: 2023/02/14. 43: 2023/05/05
51: D01D
71: Anhui Polytechnic University
72: ZHANG, Cuige, XU, Bo, XU, Maodong, ZHANG, Rongli

54: PREPARATION METHOD FOR DOUBLE-DRUG-LOADED CORE-SHELL STRUCTURE TYPE NANOFIBERS BASED ON ELECTROSTATIC SPINNING OF PICKERING EMULSION

00: -

The present invention provides a method for preparing core-shell structure type dual-drug-loaded nanofibers based on a self-assembled colloidal particle-stabilized Pickering emulsion, which belongs to the technical field of medical polymer materials. The present invention mainly includes the following steps: (1) self-assembling sodium carboxymethyl cellulose, lysozyme and hydrophilic drugs under weak interaction to prepare colloidal particles; (2) taking the colloidal particles as a particle emulsifier, gelatin as a spinning aid, and food oil containing hydrophobic drugs as an oil phase to prepare an oil-in-water emulsion; and (3) performing electrostatic spinning on the prepared emulsion under an action of high pressure to obtain the core-shell structure type double-drug-loaded nanofibers. The obtained double-drug-loaded nanofibers have good biocompatibility and biodegradability, and have a good application prospect in the fields of biological coatings, drug release, tissue engineering, etc.

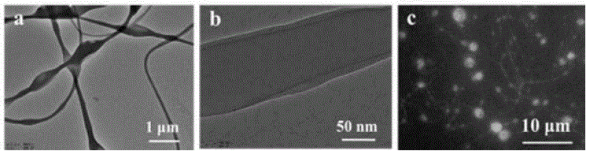

21: 2023/01770. 22: 2023/02/14. 43: 2023/05/05
51: F16H
71: Zhengzhou Research Institute of Mechanical Engineering Co., Ltd.
72: YU, Wentao, WANG, Feng, XU, Wenbo, LIU, Shijun, WANG, Dongfei, YANG, Shufeng, ZHAO, Hongfeng

54: METHOD FOR DETERMINING TEMPERATURE FIELD OF SPIRAL BEVEL GEAR

00: -

The present invention discloses a method for determining a temperature field of a spiral bevel gear, including: establishing a meshing model of the spiral bevel gear based on a gear meshing theory; performing loaded contact analysis based on the meshing model by adopting an analytical method based on a Hertz contact theory or a finite element method to obtain a gear bearing meshing characteristic parameter; calculating a friction coefficient according to the meshing characteristic parameter; calculating a heat flux according to the friction coefficient; calculating a convective heat transfer coefficient of each position of the gear according to a heat transfer theory; calculating a heat source by adopting an elliptical heat source model according to the heat flux; and determining temperature field distribution according to the heat source and the convective heat transfer coefficient.

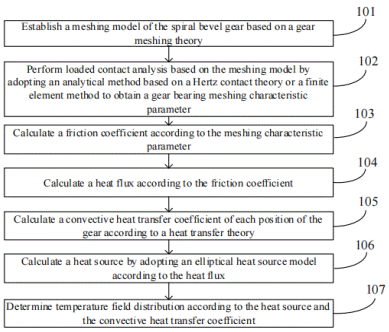

21: 2023/01771. 22: 2023/02/14. 43: 2023/05/05
51: G06Q
71: Northwest University
72: Wu Bailin, Sun Guoquan, Liu Chiyang, Zhang Xiaorui, Lin Zhouyang, Li Qi, Wang Miao, Liu Mingyi
54: METHOD FOR JUDGING LARGE-SCALE PARTICIPATION OF OIL AND GAS IN SANDSTONE URANIUM MINERALIZATION BY INCLUSION H-O ISOTOPE
00: -
The invention provides a method for judging large-scale participation of oil and gas in sandstone uranium mineralization by inclusion uranium mines, which relates to the technical field of sandstone uranium mining. A method for judging large-scale participation of oil and gas in sandstone uranium mineralization by inclusion H-O isotope comprises the following steps: S1, Firstly, collect carbonate alteration samples or calcite vein samples from the uranium mining area, and separate calcite or carbonate from them as required. The invention tests the H-O isotope of water in inclusion fluid of calcite of various alteration types in uranium mine, and then makes a comparative judgment. If the data in the ore is the most obvious, it is in line with the understanding that the uranium mine mineralization is affected by a large-scale of oil and gas, so that the uranium mine scale will not be small, and it has a good application prospect for prospecting

21: 2023/01773. 22: 2023/02/14. 43: 2023/04/13
51: C12Q; C12N
71: GUANGXI BOTANICAL GARDEN OF MEDICINAL PLANTS, GUANGXI ACADEMY OF FISHERY SCIENCES
72: JIANG, JIANPING, HUANG, GUANGHUA
33: CN 31: 2022102133750 32: 2022-03-04
54: SNP MARKER OF GP GENE AND ITS APPLICATION IN MACROBRACHIUM ROSENBERGII
00: -
The present invention disclosed a SNP marker with c.1491 T>C of GP (glycogen phosphorylase) gene in Macrobrachium rosenbergii, and provided the primers, kits and its application. The SNP marker can be used for screening dominant genotype (CC genotype) individuals, and carrying out molecular marker-assisted breeding on Macrobrachium rosenbergii, thus making genetic improvement on growth traits, and exerting wide application in cultivation of new species (strains) with high-yield in Macrobrachium rosenbergii.

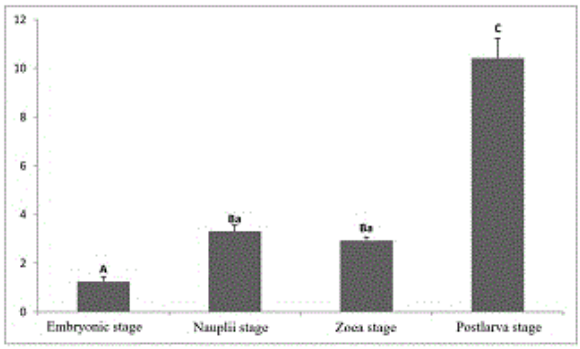

21: 2023/01774. 22: 2023/02/14. 43: 2023/05/02
51: A61G
71: Binzhou Boxing Zhichuang Digital Technology Co., Ltd.
72: Huichuan Shen
54: A NURSING ASSISTIVE DEVICES FOR CARDIOTHORACIC SURGERY
00: -
The invention provides a nursing aid for cardiothoracic surgery, belonging to the technical field of medical assistive devices. The nursing aid for cardiothoracic surgery comprises a mobile mechanism, a supporting structure and an auxiliary mechanism. The movable mechanism comprises a base and a sleeve, the internal base is provided with a first empty cavity, the threaded column surface thread is connected with a movable component, the support structure comprises a cylinder and a movable component, the cylinder is fixing on the top surface of the sleeve, the auxiliary mechanism comprises a transverse plate, a fixing block and a ring sleeve, the surface of the transverse plate is provided with a second chute. The fixing block is fixing on the surface of a connecting plate, the inner of the fixing block is provided with a second cavity,

the bottom of the sliding block is fixing with a connecting rod, the ring sleeve is fixing on the end of the connecting rod, the inner surface of the ring sleeve is installed with a lamp bead. In the process of transfer, the invention can be easily folded to reduce the occupied space, and the movement is more convenient.

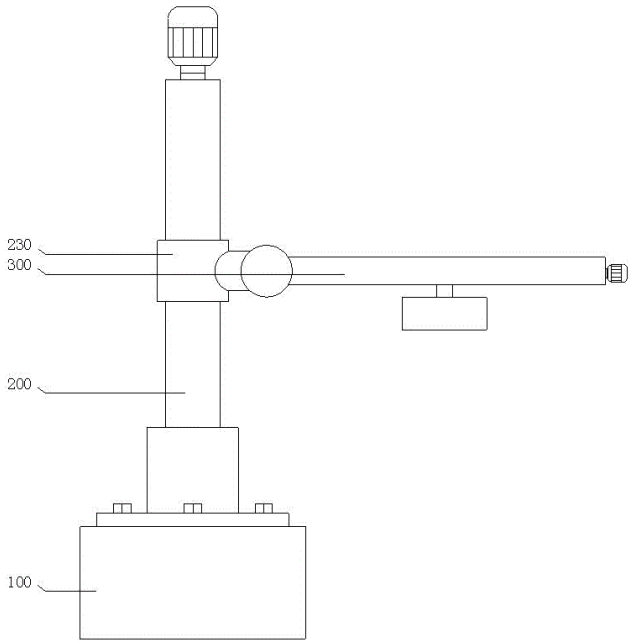

21: 2023/01775. 22: 2023/02/14. 43: 2023/05/02
51: A61K
71: GUANGXI MINZU NORMAL UNIVERSITY
72: YANG Jingjun, GAO Zequn, DUAN Aimei, JIANG Yusu, QIN Danfeng, GONG Yating, LI Cailian, LIANG Linying, DONG Sishi, XIE Luqi, HUANG Qiurong, DONG Guiying, LUO Chang
54: HIGHLAND BARLEY MORINGA OLEIFERA HEALTH WINE AND PREPARATION METHOD THEREOF
00: -
The invention discloses highland barley Moringa oleifera health wine and a preparation method thereof, and belongs to the technical field of health care products. The highland barley Moringa oleifera health wine is prepared by mixing highland barley extract, Moringa oleifera extract and rice wine according to the volume ratio of (0.5-1.5): (0.1-0.6): 100. According to the invention, the highland barley extract and Moringa oleifera extract are mixed in a proper proportion and added into rice wine as raw materials to prepare the health care wine, so that the health care efficacy of the health care wine is improved, the nutrition is more comprehensive and rich, and the consumption of raw materials is reduced.

21: 2023/01776. 22: 2023/02/14. 43: 2023/05/02
51: C12Q
71: General Hospital of the Western Theater Command of the PLA
72: Min Yang, Ting Luo, Yiling Sun, Tao Liu, Xingbiao Yang
54: A METHOD FOR PREDICTING THE GENETIC RISK OF SEVERE ACUTE MOUNTAIN DISEASE FOR NON-DIAGNOSTIC PURPOSES
00: -
The invention (Project that funded by Sichuan Provincial Natural Science Foundation (2023NSFSC0528)) relates to the field of medical technology, in particular to a method for predicting the genetic risk of severe acute mountain disease not for diagnosis and treatment purposes. It includes the following steps: factor logistic regression analysis; Construct multi-factor logistic regression model; Construction and verification of the prediction graph of SAMS prevalence; Its beneficial effects are: The prediction method of genetic risk of acute severe mountain disease for non-diagnosis and treatment purpose is provided. It is performed by drawing the subject operating curves of Testing1 (n=21), Testing2 (n=18), Testing3 (n=21), Testing4 (n=14), Validation group (n=31) (receiver operating curve characteristic, ROC) curve and calibration curve. This allows for the construction of joint models of internally and externally validated genes, which can predict whether a patient has SAMS.

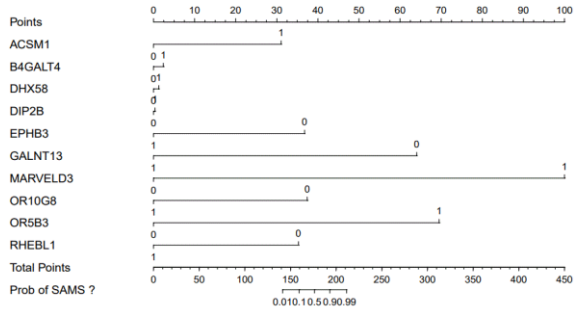

21: 2023/01777. 22: 2023/02/14. 43: 2023/05/02
51: A61M
71: Ruizhi Information Technology (Binzhou) Co., Ltd.

72: Zihua Wang

54: A SPUTUM SUCTION NURSING DEVICE FOR RESPIRATORY MEDICINE

00: -

The invention belongs to the technical field of sputum aspiration nursing apparatus, in particular to a sputum aspiration nursing apparatus for respiratory medicine. The existing soft rubber tube is connected with the suction head by threads, and both are of soft structure. Therefore, the sputum suction head in the patient's body, easy to rub with the patient's body, the sputum suction head is easy to be separated from the soft rubber tube, the sputum suction head will be left in the patient's body, causing harm to the patient. The following scheme is proposed, which comprises a sputum suction head and a connecting tube. The top of the sputum suction head is fixedly installed with an inserting ring, and the side of the two inserting rods close to each other is sliding in contact with the left and right side of the connecting tube respectively. The top of the connecting pipe is fixedly installed with a soft rubber tube. By pressing down the control frame, the sputum suction head can be separated from the soft rubber tank. When the inserting ring is inserted into the butt shell, the butt shell can double fix the inserting ring, so as to realize the stable butt joint between the sputum suction head and the soft rubber tube.

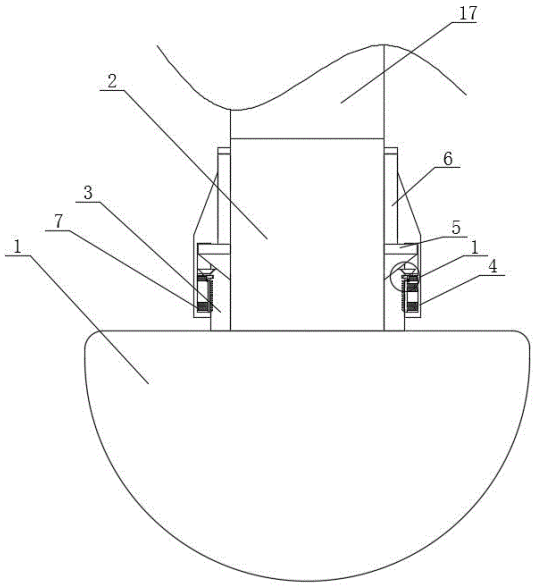

21: 2023/01778. 22: 2023/02/14. 43: 2023/05/02
51: A61G

71: Boxing Ruifeng New Materials Co., Ltd.
72: RuiFeng Han

54: A HEATING CHAIR FOR EMERGENCY TRADITIONAL CHINESE MEDICINE NURSING

00: -

The invention belongs to the technical field of traditional Chinese medicine nursing, in particular to a heating chair for emergency traditional Chinese medicine nursing. The function of existing chairs is relatively simple, often only with the function of riding and resting. With the development of society, people put forward higher requirements for chair design. The following scheme is proposed, which comprises a fixed base, the top of the fixed base is fixed with a chair, the top of the fixed base is fixed with a heating box. The heating box is provided with a drawer connected with the interior, and the bottom of the drawer is a grid. And a plurality of traditional Chinese medicine bags are placed on the grid, and the heating box is provided with a locking component for fixing the drawer. The heating box is provided with a heating component, and the invention has simple operation. By heating soaked Chinese medicinal materials volatilized into the human body, the chair has the effect of treating diseases. It facilitates the use of traditional Chinese medicine and has strong practicability.

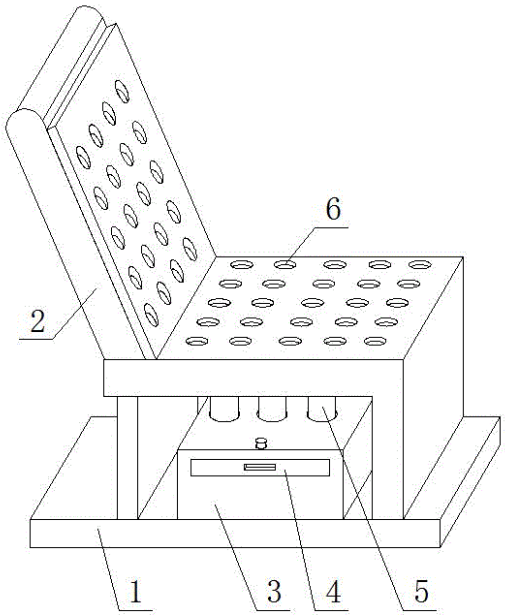

21: 2023/01779. 22: 2023/02/14. 43: 2023/05/08
51: A61B

71: Binzhou Luanfei Numerical Control Machinery Co., Ltd.
72: Zihua Wang
54: AN ADJUSTABLE THYROID POSITIONING PUNCTURE DEVICE
00: -
This application provides an adjustable thyroid location-based puncture device, which belongs to the technical field of thyroid location-based puncture. The adjustable thyroid positioning puncture device comprises a fixing component and an adjusting component, wherein the fixing component comprises a fixing clip, a threaded rod, a threaded sleeve and a connecting plate, and the adjusting component comprises a curved frame, a first locking component, a sliding block, a second locking component, a piercing needle and a locking knob. By setting the fixing clamp, threaded rod, threaded sleeve and connecting plate, the arc frame can be fixed connected to the bed side, at the same time, the threaded sleeve and connecting plate, can drive the arc frame up and down adjustment height. The different positions of the sliding block on the arc frame can be adjusted by setting the arc frame, the first locking component and the sliding block, and opening the sliding hole on the arc frame. By setting up a second lock, a needle and a locking knob, it can hold the needle in place, thus greatly reducing the hand labor of the medical staff while avoiding greater harm to the patient.

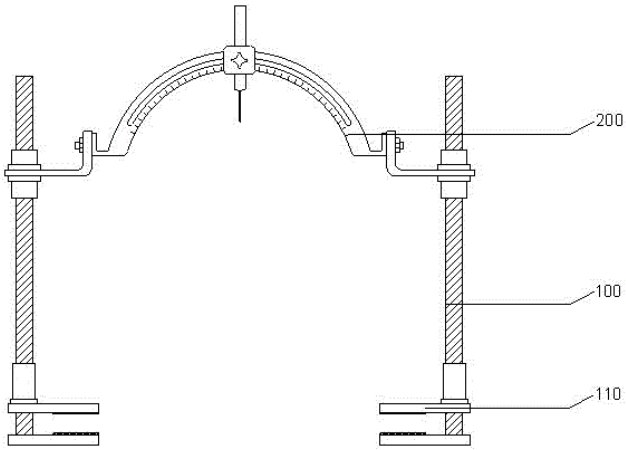

21: 2023/01780. 22: 2023/02/14. 43: 2023/05/08
51: H04W
71: China University of Mining and Technology
72: Baiyi Wang, Xinhua Liu, Dezheng Hua, Xiaoyang Liu, Mengya Hu, Xiaoqiang Guo, Yurui Shen, Lai Peng, Congmin Fang, Qiyu Wang

33: CN 31: 202211295394.9 32: 2022-10-21
54: TRAJECTORY TRACKING ALGORITHM FOR ASTEROID SURFACE SPACE EQUIPMENT BASED ON SPARROW SEARCH ALGORITHM
00: -
A trajectory tracking algorithm for asteroid surface space equipment based on sparrow search algorithm is disclosed in the invention, including space mining vehicle systems. The model for estimating the force between wheel and soil is established based on soil conditions on the asteroid surface. The models for the analysis of wheel dynamics vehicle dynamics are established respectively through kinematic analysis and dynamic analysis of the space mining vehicle system. Through the SSA-PID control model, the trajectory of the space mining vehicle in its current state is solved and outputed by the space mining vehicle system. The beneficial effect of the invention is that according to the complex surface environment of the asteroid, the change factor of effective radius of the wheel is considered and the possible influence of motion error is avoided in the process of dynamic modeling by the algorithm. The PID controller optimized by sparrow search algorithm is used to optimize the PID control parameters, which avoids the local optimal problem and enhances the trajectory tracking effect.

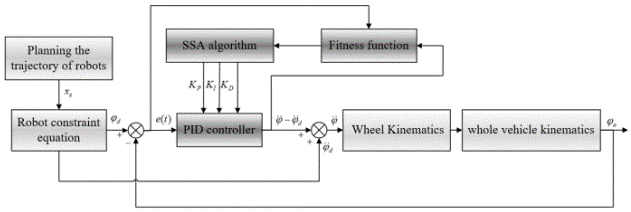

21: 2023/01781. 22: 2023/02/14. 43: 2023/05/08
51: A61J
71: Ruizhi Information Technology (Binzhou) Co., Ltd.
72: Zihua Wang
54: A RAPID DISSOLVING DEVICE FOR OBSTETRICS AND GYNECOLOGY CLINICAL AGENTIA
00: -
The invention discloses a rapid dissolution device for obstetrics and gynecology clinical pharmaceutical, which relates to the technical field of medical appliances. It comprises a round support platform, a fixed device barrel and a fixed block B, the round

support platform is provided with a battery, the bottom wall of the round support platform is fixed connected with a rotating motor, the rotating motor on one side of the outer wall is connected with a rotating screw B, one end of the rotating screw B is fixed connected with a rotating gear B, the outer wall of the rotating gear B is connected with a rotating table. The outer wall of the rotary table is sheathed with a fixing device barrel. The invention makes the reagent dissolve more quickly by rotating, thus reducing the preliminary work of the staff. This greatly increases the working efficiency of the staff. By pushing the pull off, the staff can open the rotating motor conveniently and quickly. By opening, the automation of the device is increased. And this saves the labor time of the staff, so that the dissolution of the drug more fully.

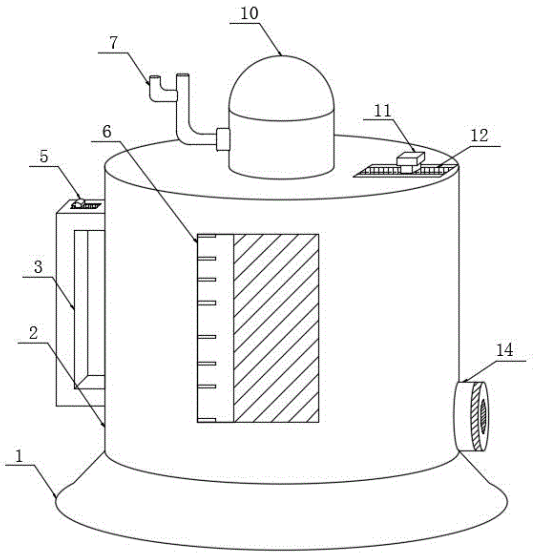

21: 2023/01782. 22: 2023/02/14. 43: 2023/05/08
51: A61N
71: Boxing Ruifeng New Materials Co., Ltd.
72: Ruifeng Han
54: A LIMITING FIXATION AUXILIARY MECHANISM SUITABLE FOR LIVER TARGETED DRUG THERAPY
00: -
The invention provides a limiting fixing auxiliary mechanism suitable for liver targeted drug therapy. It includes a lying plate, one side of the lying plate is hinged with a lying plate through the first hinge, the bottom of the lying plate is fixedly connected with a supporting leg around the corner, the bottom end of multiple supporting legs is fixedly connected with a universal wheel, and the middle side of two supporting legs is fixedly connected with a lifting mechanism. The front top of one of the supporting legs is fixedly connected with a single chip computer, the other edge of the top surface of the lying board is fixedly connected with an adjustable strap, and both sides of the lying board are provided with an auxiliary fixing mechanism, through which the arm of the patient lying on the lying board is fixed, and the leg of the patient is fixed through an adjustable strap. Furthermore, with the assistance of the fixation mechanism, the overall limit fixation of the patient's limb is completed, so as to avoid the violent reaction of the patient's limb during the injection, so as to achieve a better effect of the fixed injection time position of the patient.

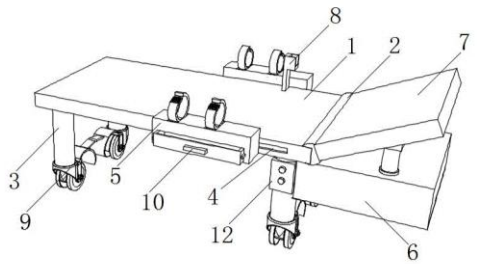

21: 2023/01783. 22: 2023/02/14. 43: 2023/05/08
51: A61G
71: Binzhou Boxing Zhichuang Digital Technology Co., Ltd.
72: Huichuan Shen
54: A THORACIC SURGERY MEDICAL CARE DISK
00: -
The invention discloses a medical nursing disk for thoracic surgery, which relates to the field of medical appliance. The utility model comprises a first tray, a second tray and a support rod, the bottom surface of the first tray is provided with a support card slot, the internal activity of the support card slot is connected with a support disk, the two sides of the first tray is fixed with a grip, the internal bottom surface of the first tray is fixed with a support rod, the top of the support rod is fixed with a suspension bar. In the invention, By fixing the lifting support rod connected at the top of the ultraviolet disinfection lamp, and the lifting sleeve rod connected with the outer wall of the lifting support rod thread, as well as the second rotary disk connected with the lifting sleeve rod top

activity, medical staff can not only control the distance between the first tray and the second tray. Moreover, it makes it easier for health care workers to reach supplies or medicines, while also disinfecting the medicines so that they do not infect bacteria that affect their effectiveness.

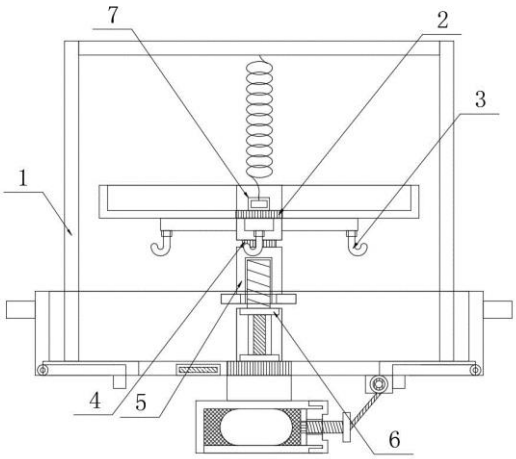

21: 2023/01809. 22: 2023/02/15. 43: 2023/05/11
51: A01N; C12N; C12R; A01P
71: Institute of Chinese Herbal Medicines, Hubei Academy of Agricultural Sciences
72: YOU, Jingmao, TANG, Tao, WANG, Fanfan, GUO, Xiaoliang, DUAN, Yuanyuan, GUO, Jie
54: PAENIBACILLUS TERRAE STRAIN FOR CONTROLLING BOTRYTIS CINEREA OF PARIS POLYPHYLLA AND APPLICATION THEREOF
00: -
The present invention relates to a Paenibacillus terrae strain for controlling Botrytis cinerea of Paris polyphylla and an application thereof. The Paenibacillus terrae strain provided by the present invention comes from the interior of Paris polyphylla leaves and has good compatibility with the own circulatory system of Paris polyphylla; the bacterial agent is simple in preparation, low in cost, non-toxic, harmless and free of environmental pollution, is conducive to the safe and effective control of Botrytis cinerea of Paris polyphylla and improvement of the yield and the quality of Paris polyphylla, and is also beneficial to green cultivation of Paris polyphylla, protection of a farmlandecosystem and promotion of sustainable development of the Paris polyphylla industry. The bacterial agent is beneficial to improving the planting soil of Paris polyphylla, increasing the diversity of microorganisms in the soil, and promoting the yield of Paris polyphylla.

21: 2023/01810. 22: 2023/02/15. 43: 2023/05/11
51: F16K
71: Dongbao Valve Co., Ltd.
72: CHU, Jiawei, ZHANG, Haizhang, LIU, Yu, LIU, Jiangtao, XIONG, Qiang, ZHANG, Qinghu, ZHU, Dailiang, ZUO, Weihui, MAO, Hongbo
54: FOUR-ECCENTRIC BUTTERFLY VALVE CONVENIENT TO REMOVE AND INSTALL
00: -
Disclosed is a four-eccentric butterfly valve convenient to remove and install, including a valve main body. The valve main body can be rotated and a snap ring is moved towards one side, so that the valve main body is disconnected from a mating pipe I; workers can directly pick up the valve main body to complete removal of the valve main body. After each end of the valve main body is aligned with the mating pipe I, the snap ring is rotated, and inclined blocks are extruded by the snap ring in the rotating process. As an elastic corrugated tube can stretch elastically, the mating pipe I is drawn close to the valve main body and extrudes an elastic seal ring, so as to ensure the sealing effect. The removing and installing process is simple, and the removing and installing efficiency during maintenance is greatly improved.

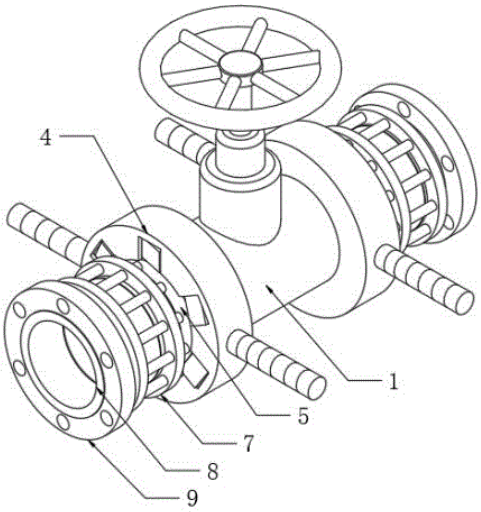

21: 2023/01812. 22: 2023/02/15. 43: 2023/05/08
51: A61K
71: GUANGXI MINZU NORMAL UNIVERSITY
72: YANG Jingjun, HUANG Xiangping, WEI Meili, WANG Xuanping, JIANG Xingwei, QU Bin, WANG Yinlan, QIN Siqi, WEN Dongyu, ZHANG Hongying
54: HIGHLAND BARLEY ROSA LAEVIGATA HEALTH-CARE WINE AND PREPARATION METHOD
00: -
The invention provides a highland barley Rosa laevigata health-care wine and a preparation method thereof, belonging to the technical field of health-care wine. The health-care wine prepared by the invention is mainly composed of highland barley and Rosa laevigata, and acanthopanax senticosus, Lycium barbarum, hawthorn, dendrobium, cassia seed, clove, Siraitia grosvenorii, carbonized Schizonepeta herb and American ginseng are added at the same time, so that the health-care wine prepared by the invention has the effects of reducing blood fat, tonifying middle energizer, invigorating qi, warming spleen and kidney, nourishing health care, enhancing immunity and resisting fatigue; and all the traditional Chinese medicines are harmless to human body, do not produce any side effects, are safe and reliable, have a simple preparation method and low cost, and are suitable for mass production; and drinking the product in a proper amount for a long time can have the effects of tonifying human body and promoting health.

21: 2023/01813. 22: 2023/02/15. 43: 2023/05/08
51: C01B
71: JIANGXI ACADEMY OF SCIENCES
72: LIU, Yuewei
54: METHOD FOR PREPARING NITROGEN-DOPED POROUS CARBON MATERIAL BY TAKING ZINC NITRATE AS ACTIVATOR
00: -
The present invention provides a method for preparing nitrogen-doped porous carbon material for carbon dioxide adsorption by taking zinc nitrate as activator. Agar is taken as a carbon source material which is activated with zinc nitrate after being carbonized. Meanwhile, nitrogen doping to a carbon material is realized by utilizing nitrogen contained in zinc nitrate. The method provided by the present invention simplifies the preparation steps of the nitrogen-doped porous carbon material and completes nitrogen doping in the process of the activating reaction. In the meantime, the prepared nitrogen-doped carbon material has developed porous structures, and as an absorbent material for carbon dioxide, the nitrogen-doped carbon material features good adsorption characteristic.

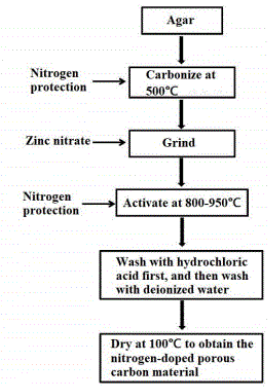

21: 2023/01814. 22: 2023/02/15. 43: 2023/05/08
51: E04H
71: Henan University of Urban Construction
72: LI Peng, NIU Jizhan, GENG Jinjun, MA Lin, WANG Lizhi, YOU Peibo, YANG Qingjie
54: PROTECTIVE THROWING NET FOR HIGH-RISE BUILDING
00: -
The invention belongs to the technical field of high-rise protective devices, in particular to a protective throwing net for high-rise building, which comprises at least two protective net frames, and the two protective net frames are connected through fixed columns; the bottom end of that fixed column is

fixedly connected to the ground, and the fixed column is fixedly connected with a plurality of locking pieces along the axial direction, and a plurality of fixed penetration holes are formed on the locking pieces at equal intervals along the circumferential direction, and the corresponding fixed penetration holes on different locking pieces are respectively located on the same axis; the fixed reinforcing bar is penetrated in the fixed penetration hole located on the same axis; the two sides of the protective net frame are respectively fixedly connected with a plurality of semicircular fixed chucks, and the semicircular fixed chucks correspond to the positions of the locking pieces. Using these structures, a protective throwing net for high-rise building can be realized, which can adapt to different angles and shapes of roofs, has good adaptability, is convenient for workers to install on the top floor, improves safety, and has high fixed strength.

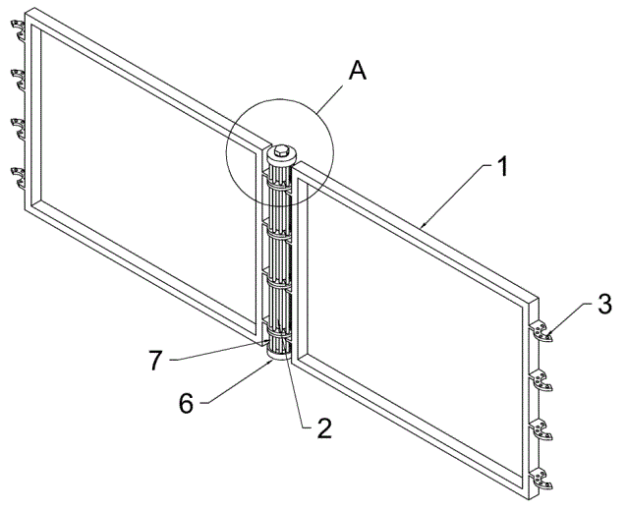

21: 2023/01816. 22: 2023/02/15. 43: 2023/05/08
51: A01D
71: Xinjiang Institute of Ecology and Geography of the Chinese Academy of Sciences
72: LIU Guojun, YANG Huabing, LI Shengyu, PEI Yuliang, LV Chaoyan, LI Congjuan

54: A METHOD FOR COLLECTING SEEDS OF WINGED FRUIT SHRUBS AND ESTIMATING PRODUCTION

00: -

The present invention relates to a method for collecting seeds of winged fruit shrubs and estimating production, which is accomplished using the steps of making a tree wrapping gauze fabric, selection of collection time, selection of wrapped plants, tree wrapping, seed collection, seed separation, and yield calculation. The advantage of the method of collecting shrub winged fruit seed production of the present invention is that this collection method has the advantages of being simple, convenient, fast and effective, with half the effort, and compared to the prior art, it is able to collect almost all winged fruit seeds of the whole plant and is a very feasible method for accurate estimation of seed production.

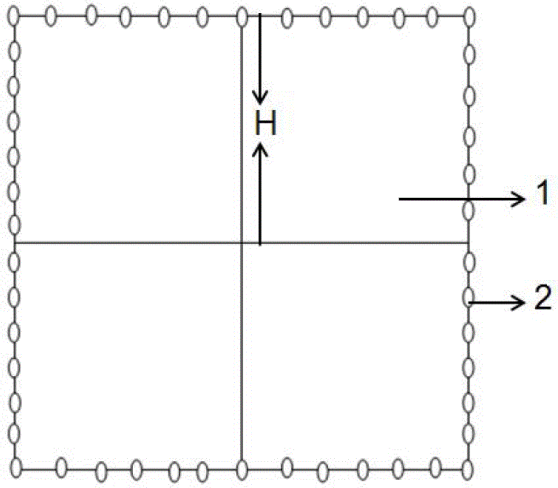

21: 2023/01817. 22: 2023/02/15. 43: 2023/05/08
51: B21D
71: Lu 'an Bi Qianwei Electromechanical Technology Co., LTD
72: HeNeng Wang

54: THE STEEL PLATE BENDING MACHINE IS CONVENIENT TO ADJUST THE BENDING ANGLE

00: -

The invention relates to the technical field of steel plate press bending machine, in particular to a steel plate press bending machine which is convenient to adjust the bending Angle, including a bottom plate, two support plates fixed at the bottom of the bottom plate and two fixed base plates fixed on the top surface of the bottom plate and symmetrical with each other. The top surface of the bottom plate is fixed near the left and right ends of the vertical plate, and the top of the two vertical plates is fixed with a horizontal plate, and also includes: The bending mechanism, arranged above the bottom plate, is used for bending the steel plate placed at the top of the two fixed seat;Then remove the mechanism, set above the bottom plate, used for the bending

mechanism in the lower pressure block limit;The bending mechanism can be used to press the steel plate placed between two guide plates, and the sliding bar and pressing block in the bending mechanism can be limited by the removable mechanism, and it is also convenient to replace the sliding bar and pressing block as a whole, so as to replace the pressing block with different camber of the bottom surface, and then it is convenient to adjust the Angle of pressing and bending.

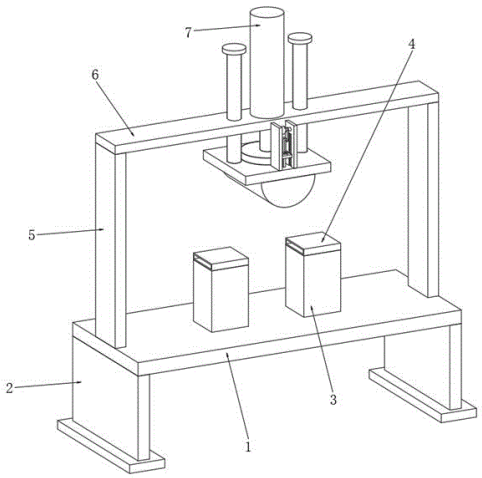

21: 2023/01818. 22: 2023/02/15. 43: 2023/05/08
51: B05C
71: Lu 'an Bi Qianwei Electromechanical Technology Co., LTD
72: HeNeng Wang
54: PE RELEASE FILM PRODUCTION WITH THE WIND RING COOLING DEVICE
00: -
The invention relates to the technical field of PE release film production equipment accessories, specifically, relates to an air ring cooling device for PE release film production, including an air ring, the shell of the air ring is provided with two mutually symmetric limit slots connected with the outside world, the air ring is provided with a finite position fixing device, the limit fixing device comprises two mutually symmetric hydraulic cylinders and two mutually symmetric limit pressing rods, and the air ring is provided with two mutually symmetric hydraulic cylinders and two mutually symmetric limit pressing rods. The telescopic shaft of the hydraulic cylinder is provided with a slide rail, two limiting compression rods close to each other at the center of the side fixed installation limited position card, the front end of the slide rail is fixed on the driving motor, the end of the output shaft of the driving motor is fixed on the downward screw, the end of the downward screw is fixed on the reverse screw.The invention is convenient for the fixed installation and disassembly operation, and brings convenience to the replacement and maintenance operation.

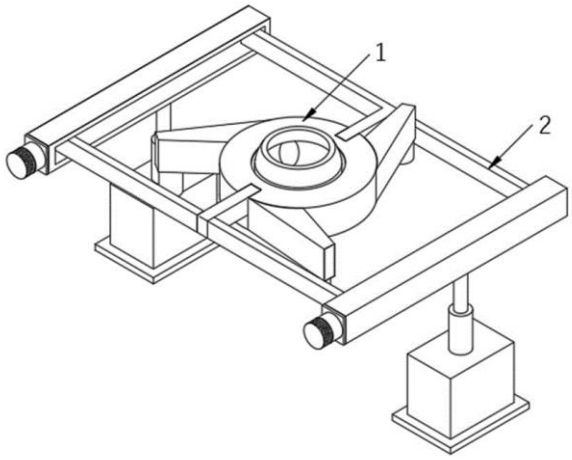

21: 2023/01819. 22: 2023/02/15. 43: 2023/05/08
51: B21F
71: Lu 'an Bi Qianwei Electromechanical Technology Co., LTD
72: HeNeng Wang
54: THE COARSE TYPE CABLE FAST TRUNCATION EQUIPMENT
00: -
The invention discloses a coarse cable fast cutting device, including a truncating machine body, the truncating machine body comprises a bottom platform and a fixed arm, the fixed arm is provided with a truncating mechanism, the truncating mechanism comprises a hydraulic cylinder, a knife seat, a threaded rod and a truncating blade, the bottom platform is provided with a flipping mechanism, the flipping mechanism comprises two fixed plates, movable seat, a press plate and a handle.By enabling the truncation blade on the truncation mechanism to move the position under the rotation of the threaded rod, the truncation point of the truncation blade can be changed, so that the complete blade part on the truncation blade can truncate the cable, and the service life of the truncation blade can be increased.

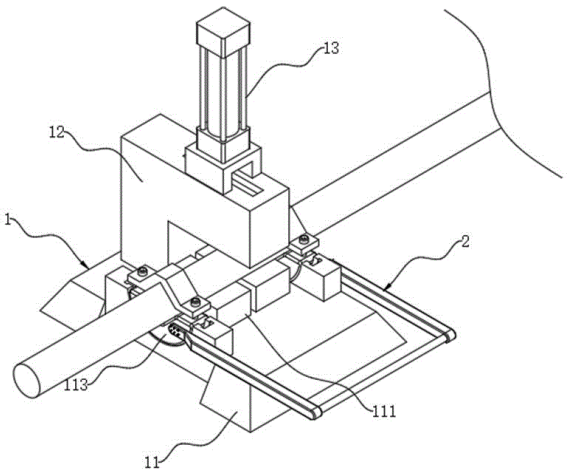

21: 2023/01820. 22: 2023/02/15. 43: 2023/05/08
51: H01G
71: Lu 'an Bi Qianwei Electromechanical Technology Co., LTD
72: HeNeng Wang
54: ELECTROLYTIC CAPACITOR TRANSPORT DEVICE
00: -
The invention relates to the technical field of electrolytic capacitors, in particular to a transport device for electrolytic capacitors, including a shell, the top of the shell is provided with a slot symsymically near the left and right sides, the center of the surface of the left and right sides of the inner wall of the shell is provided with a sliding groove, and the bottom of the inner box and the bottom of the inner wall of the shell are provided with an inner box. The bottom of the inner box wall is fixed with a sponge pad through glue, the inner box is symmetrically provided with a damping mechanism on both sides of the surface, the shell is provided with a pressing mechanism at the top;The electrolytic capacitor transport device, by setting the damping mechanism to reduce the electrolytic capacitor in the process of transportation by vibration and collision, by setting the pressing mechanism will be fixed electrolytic capacitor, avoid electrolytic capacitor displacement, thus avoiding damage to the electrolytic capacitor.

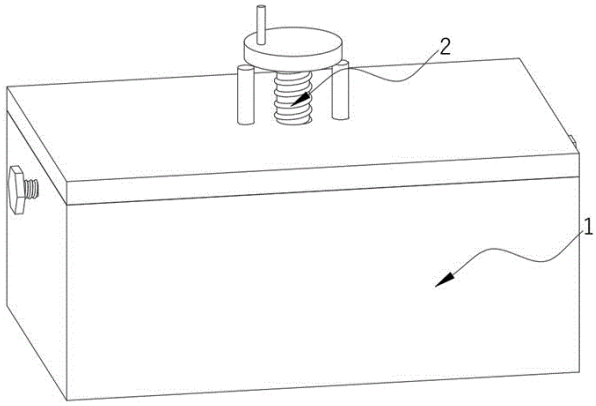

21: 2023/01821. 22: 2023/02/15. 43: 2023/05/08
51: H01H
71: Lu 'an Bi Qianwei Electromechanical Technology Co., LTD
72: HeNeng Wang
54: MULTI-PURPOSE CIRCUIT BREAKER
00: -
The invention relates to the technical field of circuit breaker, in particular to a multi-purpose circuit breaker, including a circuit breaker body, above which an ash cover is provided, and a light is provided at the lower end of the ash cover. The invention also includes: Lifting component, the lifting component of the rotating disk in a power source driven around a central point rotation, driving the ash cover to move along the vertical direction, to achieve the dual role of the circuit breaker to cover and lighting.The invention is provided with a lifting component, when the ash cover is close to the top of the circuit breaker body, the ash cover plays the role of covering the ash on the parts inside the circuit breaker body;When the moving rod and the ash cover move upward, the ash cover is far away from the top of the circuit breaker body, and the light at the bottom of the ash cover is moved out of the circuit breaker body. When the light is opened, it can play the role of lighting. When the circuit breaker body is in a dark environment, the use of the light is convenient for the staff to repair and operate the circuit breaker body.

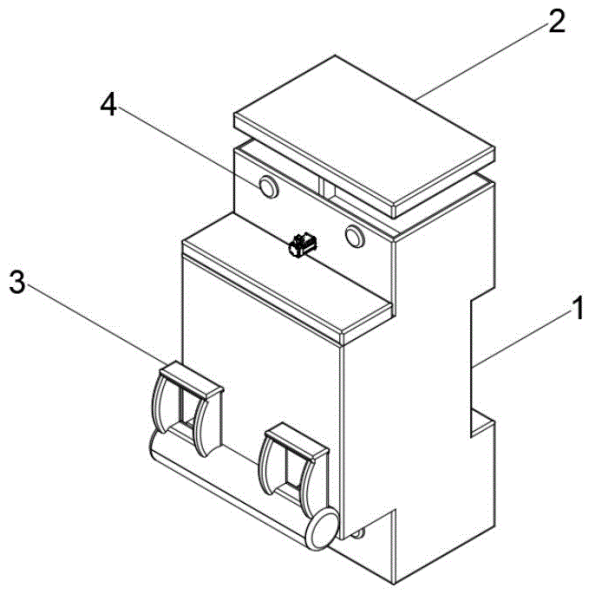

21: 2023/01822. 22: 2023/02/15. 43: 2023/05/08
51: B23Q
71: Lu 'an Bi Qianwei Electromechanical Technology Co., LTD
72: HeNeng Wang
54: STEEL STRUCTURE WELDING JIG
00: -
The invention relates to the technical field of steel structure processing, in particular to the welding fixture of steel structure, including a I-plate and two symmetrically distributed connecting plates, connecting plates are rotationally connected with the I-plate, the top of the connecting plate is provided with a rectangular plate for horizontal displacement, and the top of the rectangular plate is symmetrically provided with a clamping plate for clamping the steel structure. The clamping plate through the connecting block and its corresponding rectangular plate sliding connection, also includes: for adjusting the distance between the two clamping plate transmission component;A support component for improving the stability of the rectangular plate;Connecting assembly for fixing the Angle of connecting plate;A measuring square used to provide a reference basis for adjusting the Angle of the connecting plate.The invention is used to adjust the Angle between the connecting plate and the I-plate through the rotating connection between the connecting plate and the I-plate, so as to facilitate the adjustment of the Angle of the connecting plate and other components according to the Angle of the steel structure to be welded, and thus expand the scope of application, and has the advantages of simple structure and convenient operation.

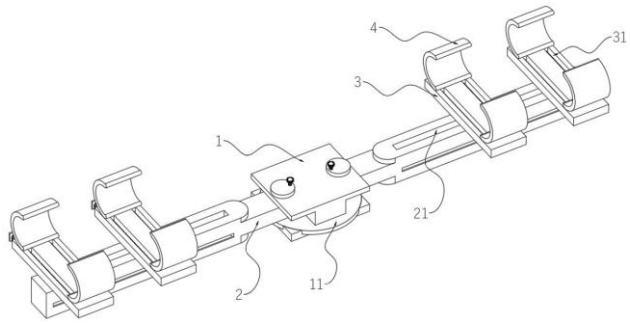

21: 2023/01823. 22: 2023/02/15. 43: 2023/05/08
51: G06K
71: Lu 'an Bi Qianwei Electromechanical Technology Co., LTD
72: HeNeng Wang
54: THE PRODUCT STATIC IMAGE RECOGNITION DEVICE
00: -
The invention discloses a static image recognition device for goods, including a shell, the front of the shell is hinged with a warehouse door, the upper surface of the warehouse door is installed with a scanning code payment machine, the interior of the shell is transversally installed with a plurality of partitions, the partition divides the interior of the shell into a plurality of independent storage bins, the middle of the top of the storage bin is installed with a camera, the top outside of the partition near the warehouse door is installed with a lighting mechanism. The lighting mechanism comprises a positioning plate.Multiple cameras of the product static image recognition device can take photos of each storage bin after the user takes the goods, and then compare with the photos before taking the goods, so as to read the items taken out by the user and ensure the accuracy of scanning. Besides, different items can be separated through the limit plate on the partition to avoid the stacking of items in use. It is not easy to take photos and scan, and the lighting mechanism can ensure that there is sufficient light in each warehouse, so that the photos are clear and convenient for scanning.

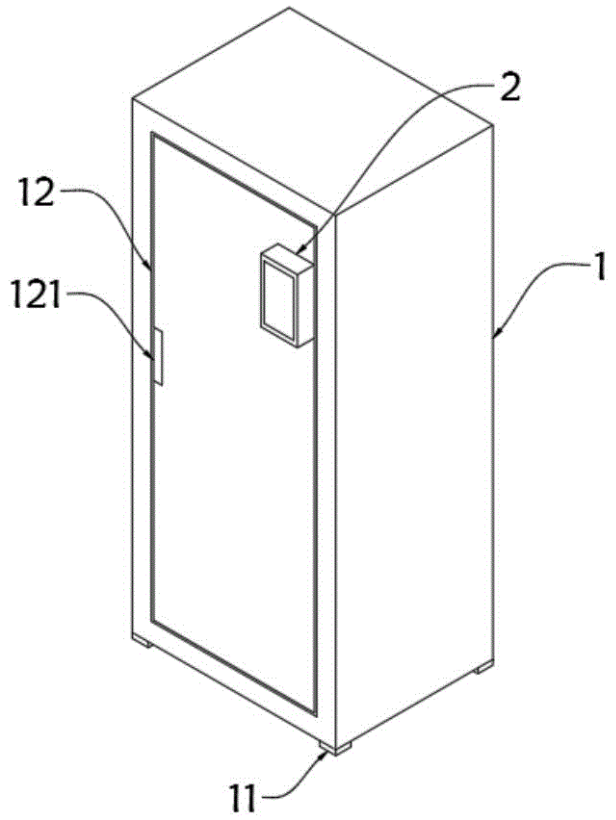

21: 2023/01824. 22: 2023/02/15. 43: 2023/05/08
51: A01N; C12N
71: Guangxi Academy of Sciences
72: WANG Xiaohu, ZHOU Liqin, WEI Shengbo, YE Liujian, ZHU Qixia, HE Shuang
54: APPLICATION OF BACILLUS VELEZENSIS
00: -
The invention relates to the technical field of microorganisms, and in particular to an application of Bacillus velezensis. The invention also provides an application of strain HS1 in planting alpine Shuijingui tea tree, wherein the strain HS1 is mixed with fish and fermented to extract supernatant to prepare amino acid foliar fertilizer. When sprayed on alpine Shuijingui tea trees, the amino acid foliar fertilizer significantly promotes the growth indexes of tea tree, such as germination density, weight of one bud, one leaf and one hundred buds, chlorophyll content of tea, and the quality indexes of tea such as soluble protein, soluble sugar, amino acid and tea polyphenol, indicating that amino acid foliar fertilizer effectively promotes the growth of Shuijingui tea tree and improves the quality of tea.

21: 2023/01825. 22: 2023/02/15. 43: 2023/05/08
51: G01N
71: Xinjiang Institute of Ecology and Geography of the Chinese Academy of Sciences
72: LIU Guojun, LI Shengyu, FAN Jinglong, ZHANG Shicong, ZHOU Zhibin, SONG Chunwu, YANG Huabing
54: A METHOD OF PLANTING CROPS IN A NARROW-ROW SHRUB ECONOMIC PROTECTION FOREST
00: -
The present invention relates to a method of planting crops in a narrow-row shrub economic protection forest, which is completed by the steps of land selection and preparation, planting layout, seedling transplanting, interplanting, irrigation, management and harvesting. Planting shrub protection forest in farmland can reduce the wind speed of farmland, play an effective role in protecting crops and bring ecological benefits; at the same time, shrubs, as economic trees, can give farmers increased income by harvesting their seeds and fruits.

21: 2023/01826. 22: 2023/02/15. 43: 2023/05/08
51: A01G
71: XINJIANG INSTITUTE OF ECOLOGY AND GEOGRAPHY, CHINESE ACADEMY OF SCIENCES
72: YOU Yuan, ZHOU Na, WANG Yongdong
54: SAND BARRIER FOR ECOLOGICAL RESTORATION AND DESERTIFICATION CONTROL
00: -
The invention discloses a sand barrier for ecological restoration and desertification control, which comprises two sand barrier assemblies arranged in parallel, wherein a plurality of bending sand blocking units are respectively arranged on the two sand barrier assemblies, the bending sand blocking units are located between two sand barrier assemblies, and the bending sand blocking units on either sand barrier assembly are arranged correspondingly to the bending sand blocking units on the other sand barrier assembly, and both the bending sand blocking units comprise two rotating sand blocking plates rotatably connected with the sand barrier assemblies. A sliding sand blocking plate is slidably connected in the rotating sand blocking plates, one end of two sliding sand blocking plates in the same bending sand blocking unit far from the rotating sand blocking plate is rotatably connected with a limiting sleeve, and two limiting sleeves in the corresponding two bending sand blocking units are inserted with U-shaped limiting rods. The invention has the advantages of simple structure, convenient installation, stable structure and good wind-proof and sand-fixing effects.

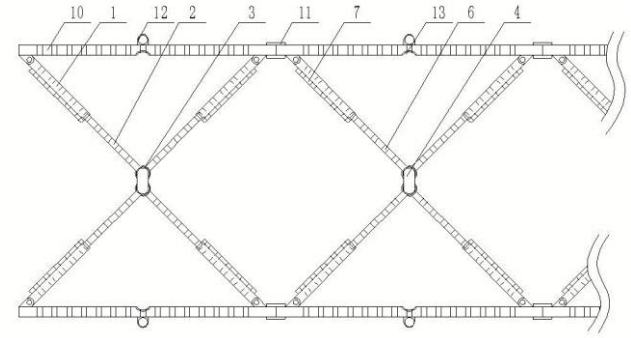

21: 2023/01827. 22: 2023/02/15. 43: 2023/05/08
51: A61K; A61P
71: Taizhou Central Hospital (Taizhou University Hospital)
72: Hairong Shu
54: A KIND OF CHINESE PATENT MEDICINE FOR TREATING VOCAL CORD LEUKOPLAKIA
00: -
A kind of Chinese patent medicine for treating vocal cord leukoplakia in the technical field of Chinese patent medicine, which comprises the following components: raw Radix Paeoniae Alba: 110g ~ 210g; Radix Scrophulariae: 110g ~ 210g, Glycyrrhiza uralensis Fisch.:10~21g, this kind of Chinese patent medicine for treating vocal cord leukoplakia uses the roots, stems, leaves, flowers, fruits, seeds, insects and minerals of the first-class pure natural Chinese herbal medicines to make pills, starting from the root cause of vocal cord leukoplakia in traditional Chinese medicine, developed according to the transformation of the principle of syndrome differentiation and treatment, it can enhance the vitality of vocal cord cells, promote the repair of vocal cord mucosa, remove accumulation of keratose, and restore vitality to diseased tissues, the medicine mainly focuses on nourishing yin and eliminating the nodules, benefiting yin and eliminating necrotic tissues, promoting blood circulation and removing blood stasis, cleansing lung and promoting the exhalation and inspiration of lung, invigorating spleen and benefiting lung, and resolving phlegm and eliminating the nodules, and comprehensively regulates various visceral organs related to the pathogenesis, adjusts the human body in all directions, reverses its pathological mechanism, and prevents the occurrence of complications, so as to enter into fundamental treatment and overall recovery, and treatment of both symptoms and root causes.

21: 2023/01828. 22: 2023/02/15. 43: 2023/05/08
51: G01N
71: Mudanjiang Normal University
72: QIAO Zhenglei, XUE Jukun, JIN Zhimin, LIU Zhu, JIN Zhe

54: METHOD FOR TESTING EARLY PREGNANCY OF FEMALE SIBERIAN TIGERS AFTER MATING

00: -

The invention relates to a method for testing early pregnancy of a female Siberian tiger after mating, which comprises the following steps: step 1, continuously collecting fresh urine of the female tiger during mating; step 2: continuously collecting the fresh urine of the female tiger in the first week after mating; step 3: sending all the urine collected in the above two steps for test, and measuring the progesterone level in the urine sample; step 4: comparing and analyzing the urine progesterone levels measured in mating period and the first week after mating by Statistical Product and Service Solutions (SPSS) statistical software. If the average level of progesterone in the urine of the female tiger in the first week after mating is significantly higher than that in the mating period, it can be judged that the female Siberian tiger is pregnant successfully. This method can make the Siberian tiger population more convenient to manage, and it is no longer necessary for tigers to mate twice to avoid fighting, and it is no longer necessary to pay attention to the female tiger's estrus again, and it can provide better dietary conditions for pregnant female tigers, and it is no longer necessary to judge whether the female tiger is pregnant successfully according to the external morphology, and the judgment effect is accurate.

21: 2023/01829. 22: 2023/02/15. 43: 2023/05/10
51: A01H
71: Zhejiang Academy of Agricultural Sciences
72: Wang Junmei, Cai Kangfeng, Yue Wenhao, Liu Lei

54: METHOD FOR BREEDING NEW BARLEY VARIETIES BY CHEMICAL MUTATION

00: -

The invention discloses a method for breeding new barley varieties by chemical mutation, which comprises the following steps: directionally select barley parents for mutagenesis, plant M1 generations with a large enough population, and harvest M2 seeds in a mixed manner, plant M2 seeds, and select according to ornamental characters to obtain the corresponding ornamental barley variety. The method of the invention combines the chemical mutagenesis method with systematic cultivation, so that the breeding period can be shortened, and at the same time, an ideal ornamental new barley variety can be bred by using the richness of variation.

21: 2023/01830. 22: 2023/02/15. 43: 2023/05/10
51: A61K
71: Li Zude
72: Li Zude

54: TRADITIONAL CHINESE MEDICINE PRODUCT SUITABLE FOR MEN TO IMPROVE IMMUNITY AND KILL CORONAVIRUS

00: -

The invention discloses a traditional Chinese medicine product suitable for men to improve immunity and kill coronavirus, wherein the traditional Chinese medicine product is made of 22 kinds of raw materials, specifically: honeysuckle, Atractylodes macrocephala, Astragalus, saposhnicovia divaricate, Forsythia, ophiopogon root, Schizonepeta, Mint, Polygonum multiflorum, Chinese yam, Rehmannia glutinosa, Lycium barbarum, Ginseng, Schisandra, Morinda officinalis, Eucommia ulmoides, mulberry fruit, cistanche, purslane, black sesame, ginger, and liquorice. The traditional Chinese medicine product is a special-effect product developed for men to prevent and kill the new coronavirus, omicron and various mutant viruses on the basis of improving immunity. This product can treat both the surface of the patient's illness and the root cause of the patient's illness; it

can not only treat a variety of difficult and miscellaneous diseases, but also kill the new coronavirus, omicron and improve the body's immunity and prolong life. The invention can prevent influenza, delay cell aging, and prolong life. It has the functions of consolidating the foundation and cultivating the essence, nourishing the marrow and essence, nourishing the kidney and strengthening yang, and detoxifying.

21: 2023/01831. 22: 2023/02/15. 43: 2023/05/11
51: C08L
71: xuzhou college of industrial technology
72: Weng Guowen, Wang Yanqiu
54: VULCANIZED RUBBER RECYCLED RUBBER AND MANUFACTURING PROCESS THEREOF
00: -
The invention discloses a neoprene vulcanized rubber recycled rubber, wherein the raw materials and parts by mass thereof are: 100 parts of waste neoprene vulcanized rubber, 0.2-2.0 parts of active agent 510 or active agent 480, 0.5-3.0 parts of rosin resin, 0.5-3.0 parts of terpene resin, 1-8 parts of Coumarone resin, 1-8 parts of petroleum resin (C5, C9), and 1-5 parts of improved rubber. The advantageous effects of the invention: the invention adopts internal mixer to process and mainly uses mechanical method to process, which has heat and chemical action concurrently, and the production efficiency is higher. The vulcanized neoprene rubber blocks are large in size and only need to be broken up without being made into finer rubber powder. Adding master rubber can improve the performance to have a high tensile strength and high elongation; the plasticity and fluidity of the rubber material are good, and the surface of the rubber material is smoother.

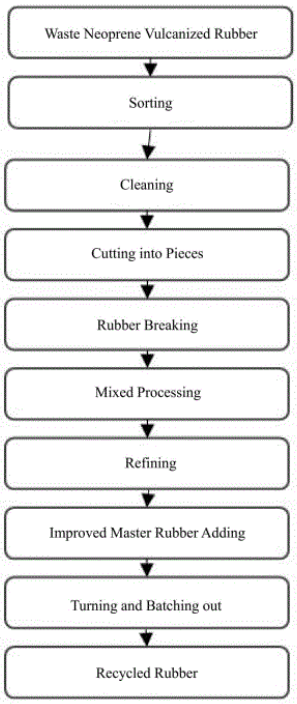

21: 2023/01832. 22: 2023/02/15. 43: 2023/05/08
51: B28C
71: Lu 'an YuanRongTing Electromechanical Technology Co., LTD
72: YongZhu Lu
54: CEMENT MORTAR GENERATING EQUIPMENT
00: -
The invention discloses a cement mortar generation device, which comprises a mixing mechanism, a cement conveying mechanism, a sand conveying mechanism and a water conveying mechanism. The mixing mechanism comprises a mounting bracket, a mixing tank and a mixing member. The mixing tank is vertically fixed on the mounting bracket, and the mixing member is used to stir the raw materials in the mixing tank. Cement conveying mechanism comprises installation bracket two, storage shell, conveying member, storage shell is fixed vertically on the installation bracket two, conveying member is used to receive the cement in the storage shell and transfer it to the mixing tank, sand conveying mechanism comprises installation bracket three, housing shell, transportation member, housing shell shape structure and storage shell shape structure is consistent. The shape structure of the transport component is consistent with the shape structure of the transport component. The connection

relationship between the installation bracket three, the housing and the transport component is consistent with the connection relationship between the installation bracket two, the storage shell and the transport component.

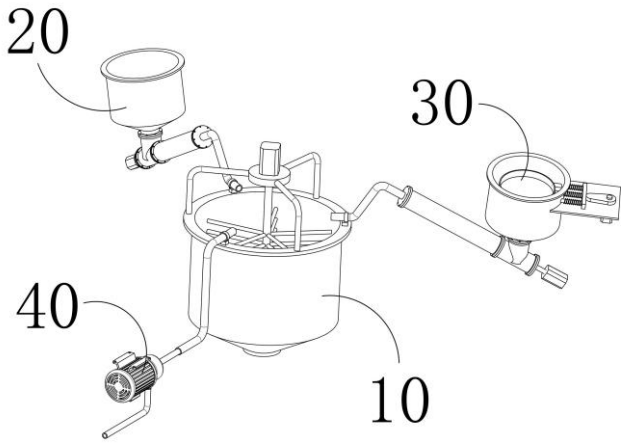

21: 2023/01833. 22: 2023/02/15. 43: 2023/05/08
51: E04B
71: Lu 'an YuanRongTing Electromechanical Technology Co., LTD
72: YongZhu Lu
54: SPLICE TYPE PARTITION WALL
00: -
The invention discloses a splicing partition wall, which comprises an upper fixed track, a lower fixed track and a wall panel, the upper fixed track is horizontally fixed on the ceiling, the lower fixed track is horizontally fixed on the ground, the wall panel is arranged between the upper/lower fixed track, the top of the wall panel is provided with an upper mounting chute, and the bottom is provided with a lower mounting chute, The side of the wall panel parallel to its own length direction is provided with a fixed groove one/two, the bottom of the groove is provided with a screw fastening hole connected with the upper installation groove, the groove of a fixed groove is provided with a covering plate, covering plate and a fixed groove groove wall is provided with a clamping piece and connected between the two through the clamping piece, A fixed groove is provided with two groups and are located on the installation of the chute along the width of the side of the wall panel, the structure of the fixed groove two and the structure of the fixed groove one, and the connection relationship between the fixed groove two, the lower installation chute and the connection relationship between the fixed groove one, the installation chute.

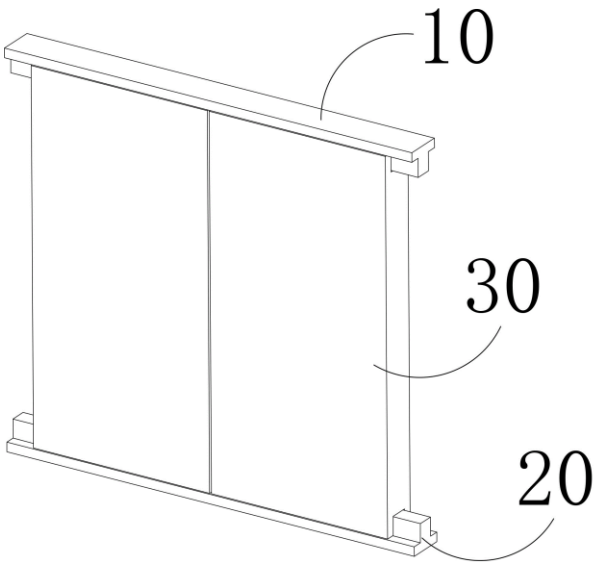

21: 2023/01834. 22: 2023/02/15. 43: 2023/05/08
51: E04B
71: Lu 'an YuanRongTing Electromechanical Technology Co., LTD
72: YongZhu Lu
54: BUILDING CURTAIN WALLS THAT ARE EASY TO CLEAN
00: -
The invention discloses a building curtain wall which is easy to clean, including a curtain wall panel and a cleaning mechanism, the curtain wall panel is vertically fixed on the outside of the building wall, the cleaning mechanism is arranged on the curtain wall panel and used for wiping and cleaning the dust on the surface of the curtain wall panel, the two sides of the curtain wall panel perpendicular to its own length are provided with a guide chute, and the two groups of guide chute are provided with a driving component. A driving component comprises a driving motor, a lead screw, a guide rod, a driving motor is fixed vertically in the guide chute, a coaxial connection between the lead screw and the driving motor, the guide rod is fixed vertically in the guide chute, the driving component is installed with a connecting bracket, connecting bracket and a movable connection between the guide rod and the two constitute a sliding guide, connecting bracket is installed on the screw outside through the wire mother, Cleaning mechanism is located on the side of the curtain wall away from the building wall and

cleaning mechanism is also installed between the two groups of connection support.

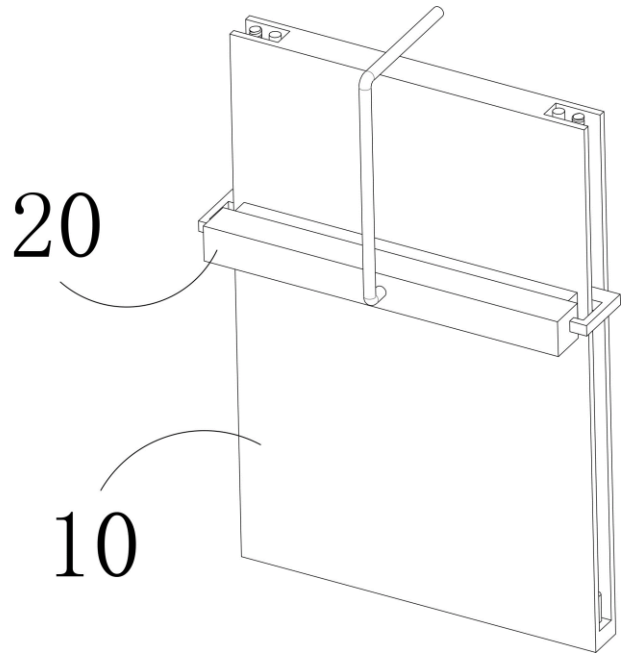

21: 2023/01835. 22: 2023/02/15. 43: 2023/05/08
51: B65H
71: Lu 'an YuanRongTing Electromechanical Technology Co., LTD
72: YongZhu Lu
54: THE STORAGE RACK OF THE DIGITAL TUBE
00: -
The invention relates to the storage technology field of digital tube, in particular to a storage rack of digital tube, including a cabinet body, the bottom of the cabinet body is connected with a pulley on the external bolt, the cabinet body is provided with three pumping cabinets, each pumping cabinet is provided with a placing rack assembly, each pumping cabinet is connected with a handle through screws;The invention is fixed on the digital tube by means of the placing rack assembly arranged in the pumping cabinet so that the digital tube will not have a collision, so that the tube body will be broken and affect the use. The placing rack assembly is also installed with a rectangular screen plate for placing desiccant, and the air hole on the hollow sponge board can ensure a dry atmosphere for the digital tube in the partition. Avoid the damage caused by poor reception due to the moisture generated by the sealing state when the digital tube is used, thus affecting the normal use.

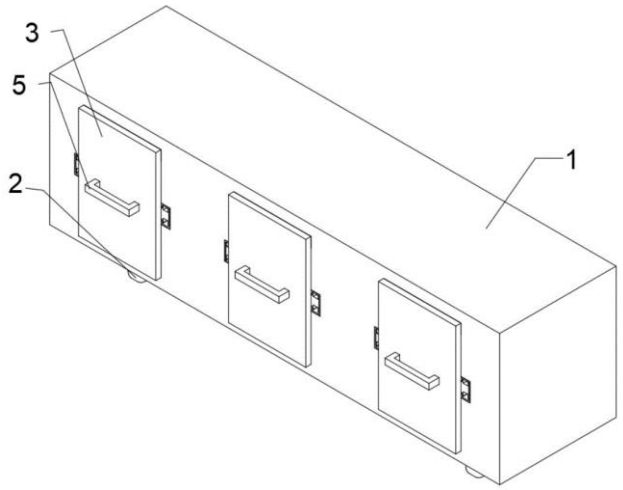

21: 2023/01836. 22: 2023/02/15. 43: 2023/05/08
51: H01Q
71: Lu 'an YuanRongTing Electromechanical Technology Co., LTD
72: YongZhu Lu
54: ANTENNA AUXILIARY STRUCTURE
00: -
The invention relates to the technical field of antenna, in particular to an antenna auxiliary structure, including a fixed plate, the front end of the fixed plate is provided with a U-shaped hoop near the upper and lower ends, and both ends of the U-shaped hoop are connected with nuts after passing through the fixed plate, and the curved surface of the inner ring of the two U-shaped hoop is connected with an antenna vertical rod. A fixing rod and a bolt fixing block are respectively arranged on both sides of the top side and the bottom side of the fixed plate after the end face, and the two fixed rods are connected with a movable plate through the first rotating shaft.The fixing plate is installed on an antenna vertical rod through a U-shaped hoop and nut, and the fixing plate is provided with anti-slip teeth, which is conducive to the fixing plate firmly installed on the antenna vertical rod. In addition, the length of the movable rod can be controlled by the movable rod with the limiting bolt and the bolt fixing block, and then the bottom end of the movable plate can be adjusted through the movable rod. So that the antenna body can receive signal sources or transmit signals more effectively.

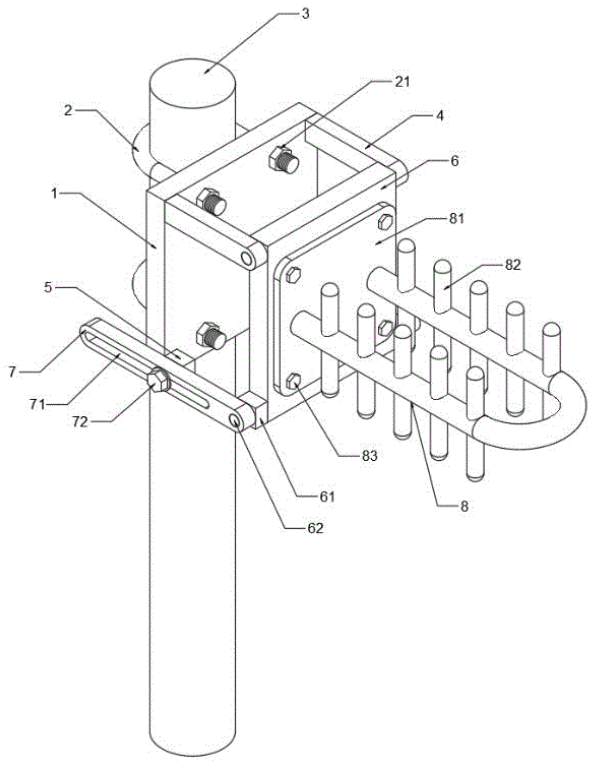

21: 2023/01837. 22: 2023/02/15. 43: 2023/05/08
51: E04B
71: Lu 'an YuanRongTing Electromechanical Technology Co., LTD
72: YongZhu Lu
54: HIGH STRENGTH ALUMINUM CLAD STEEL CURTAIN WALL
00: -
The invention provides a high-strength aluminum-clad steel curtain wall, which comprises a dragon skeleton, galvanized steel plate, curtain wall plate and connecting piece. The dragon skeleton is a rectangular frame structure and vertically arranged. The dragon skeleton is located between the curtain wall plate and the building wall and is perpendicular to the building wall and the curtain wall plate. The galvanized steel plate is located on the left side of the dragon skeleton and arranged into an L-shaped structure. One of the bending surface of galvanized steel plate is fitted with the left side of the dragon skeleton and is fixed by tapping screws, another bending surface of galvanized steel plate is fitted with the outside of the building wall and is fixed by expansion bolts, and the right side of the dragon skeleton is fixed connected with the curtain wall panel through connectors. The significance lies in that one end of the dragon skeleton is fixed connected with the curtain wall panel through the transverse frame material. The other end of the dragon skeleton is fixed by the longitudinal frame material and the transverse frame material, which increases the bearing section of the dragon skeleton to the curtain wall plate, improves the strength and interference of the dragon skeleton, enhances the deformation resistance, good economy and easy installation.

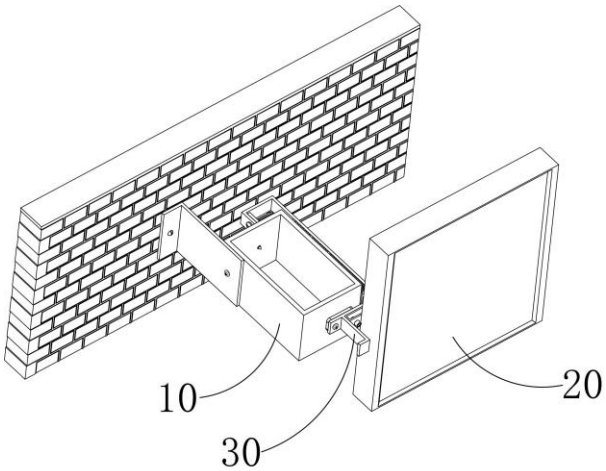

21: 2023/01838. 22: 2023/02/15. 43: 2023/05/10
51: B65B
71: Huainan Normal University
72: Shaohua Qiu, Yanfen Li
54: A MATERNITY, INFANT AND CHILD PRODUCT PACKAGING TABLE WITH A GUIDING MECHANISM
00: -
The invention relates to the technical field of infant and child product packaging, in particular to a pregnancy, infant and child product packaging table with a guiding mechanism. It comprises a workbench structure and a guide structure, the guide structure includes the left side of the workbench through the sliding slot, the upper end of the workbench before and after the sliding slot is fixed connected with a guide baffle, the lower end of the sliding slot is provided with a conveying structure, the upper end of the conveying structure through the sliding slot is connected to the upper end of the workbench. The beneficial effects are as follows: the invention is provided with a guiding structure, which can place the product from one end of the packing table, and transport the product to the operating station through the guiding structure, which can reduce the time for

the staff to take the product back and forth. It can reduce the labor of the staff, improve the work efficiency, and through the oriented structure of the product transport can also avoid product accumulation. It can avoid the problem of product damage caused by random falling, and it can also detect the product in the conveying process, and place the bad product on the placing plate for the subsequent unified collection and processing.

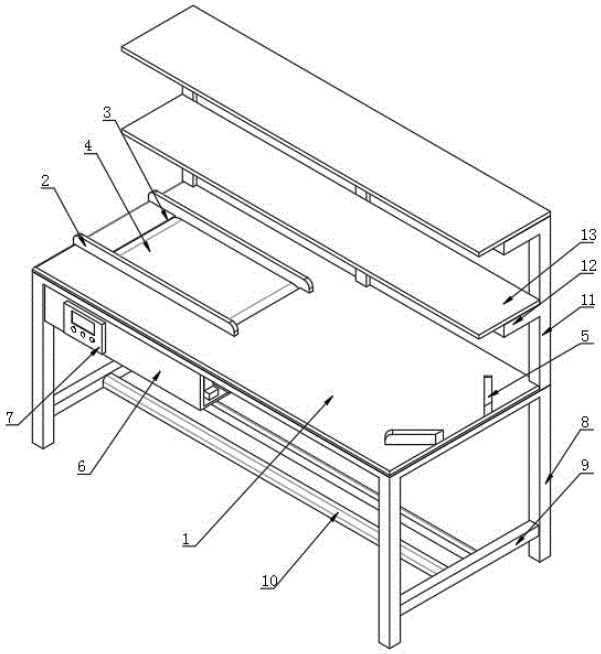

21: 2023/01839. 22: 2023/02/15. 43: 2023/05/10
51: C08B
71: JIAXING VOCATIONAL&TECHNICAL COLLEGE
72: HE Weiqiang, LIU Jun
54: METHOD FOR EXTRACTING POLYSACCHARIDE FROM STROPHARIA RUGOSOANNULATA
00: -
The invention relates to a method for extracting polysaccharide from Stropharia rugosoannulata, which comprises the following steps: cleaning the picked Stropharia rugosoannulata, freeze-drying, pulverizing, sieving, and collecting fine powder to obtain Stropharia rugosoannulata powder; adding ionic liquid-polyethylene glycol 2000 composite solution into Stropharia rugosoannulata powder, and then extracting by microwave-assisted method; filtering the extractive solution, and collecting filtrate to obtain Stropharia rugosoannulata polysaccharide extract. In the invention, the ionic liquid-polyethylene glycol 2000 composite solution is used as the extraction medium for the first time, and microwave-assisted method is combined to extract Stropharia rugosoannulata polysaccharide in a closed, high-temperature and high-pressure environment. Ions in ionic liquid-polyethylene glycol 2000 composite solution can accelerate the transmission of microwave energy, accelerate the rupture of cells and promote the release of intracellular polysaccharides. Ionic liquid-polyethylene glycol 2000 composite solution has high stability at high temperature, which is very suitable for microwave-assisted extraction in closed environment. In addition, ionic liquids with long alkyl chains have strong solubility for many inorganic and organic substances, and can extract fat-soluble and water-soluble polysaccharide compounds from Stropharia rugosoannulata. The method provided by the invention can improve the extraction rate of Stropharia rugosoannulata polysaccharide, shorten the extraction time, reduce the extraction cost, is environmentally friendly, and is beneficial to the subsequent separation and purification of Stropharia rugosoannulata polysaccharide.

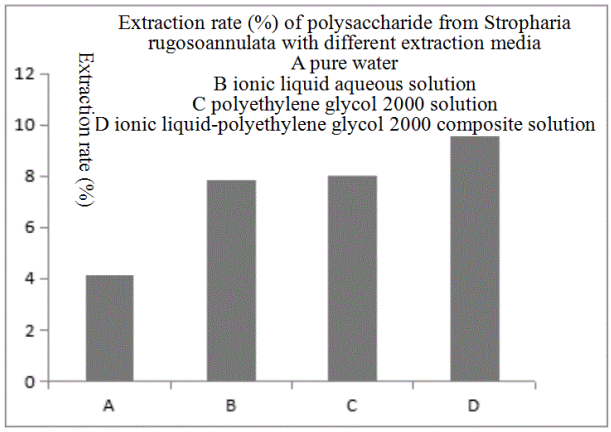

21: 2023/01840. 22: 2023/02/15. 43: 2023/05/11
51: G01S
71: Prof. K.Raja Rajeswari, Mrs.N.Roopa Vathi, Dr. B.Leelaram Prakash
72: Prof. K.Raja Rajeswari, Mrs.N.Roopa Vathi, Dr. B.Leelaram Prakash
33: IN 31: 202241075280 32: 2022-12-25
54: A SYSTEM FOR COMPOSITE WAVEFORM OF (GAUSSIAN AND RAYLEIGH) DISTRIBUTION FOR NLFM GENERATION AND METHOD THEREOF

00: -
The present invention discloses a system for providing composite Waveform of (Gaussian and Rayleigh) Distribution for Nonlinear Frequency Modulated (NLFM) waveforms Generation. In the present invention, the Composite waveform of (Gaussian and Rayleigh) Probability Distribution Function is brought out. The above two distributions are well known in the area of communications. Present innovation is composite of the above two distributions (waveforms) to have better performance mainly in the field of Radar and Sonar. This distribution function is used in the generation of NLFM (Non-Linear Frequency Modulated) waveform. In the text sometimes waveform is referred as signal.

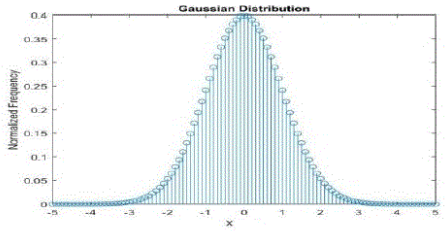

Fig1: The Gaussian Pulse

21: 2023/01841. 22: 2023/02/15. 43: 2023/05/11
51: C07D
71: Dr. K.Rajaganapathy, Dr. K. Masilamani, Dr. B. Senthilnathan, Dr. P. Panneerselvam, Mrs. M. Manoyogambiga, Mrs. K. Devi, Dr. R. Gowri, Mr. M.Vigneshwar, Dr. K. Manvizhi, Mr. M. Loganathan
72: Dr. K.Rajaganapathy, Dr. K. Masilamani, Dr. B. Senthilnathan, Dr. P. Panneerselvam, Mrs. M. Manoyogambiga, Mrs. K. Devi, Dr. R. Gowri, Mr. M.Vigneshwar, Dr. K. Manvizhi, Mr. M. Loganathan
33: IN 31: 202241072726 32: 2022-12-15
54: AN ANTI-CANCER HDAC INHIBITOR TO TARGET ALZHEIMER'S DISEASE BY INHIBITING HUMAN MMP-13 AND GLUTATHIONE S-TRANSFERASE
00: -
The present invention discloses an anti-cancer HDAC inhibitor to target Alzheimer's disease by inhibiting human MMP-13 and glutathione S-transferase. The method Based on the preliminary work furthermore, the project will concentrate on Towards Drug Repurposing of Panobinostat as an Anti-Cancer HDAC Inhibitor to Produce Inhibition of Human MMP-13 (Collagenase-3) and Glutathione S-Transferase for Targeting Alzheimer's Disease via In-Vivo Animal Model and Clinical Trial.

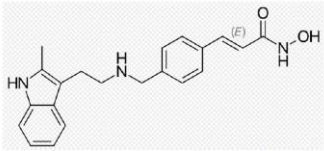

Fig-1 Chemical Structure of Panobinostat as on Anti-cancerous HDAC Inhibitor

21: 2023/01843. 22: 2023/02/15. 43: 2023/05/11
51: C02F
71: Nanchang Institute of Technology
72: Jinwen Xia, Lichao Zhang, Fan Ma, Xianghui Lu, Haina Zhang, Jianmin Zhao, Peilin Ge
54: A SOIL SLOPE ECOLOGICAL RESTORATION SYSTEM
00: -
The invention discloses a soil slope ecological restoration system, belonging to the technical field of slope restoration. The invention comprises a slope body, the slope body is arranged below the slope foot storage tank, the slope foot storage tank is arranged above the filter component. A planting tank is arranged above the slope body, and a spray component is arranged above the planting tank, and a protective component is arranged at one end above the slope body. The invention is convenient for the device to filter the water flowing into the slope foot storage tank when it is in use by providing a filter component. This improves the practicality of use. The invention provides a protective component. When the rolling stone slides down, the rolling stone is blocked by the protective frame. When the rolling stone crashes into the protective frame, the buffer plate moves inside the protective frame. The force of impact is buffered by the buffer spring i and the buffer spring ii, so that the device is convenient to block the rolling stone when it is in use, so as to prevent the rolling stone from sliding down and affecting the growth of plants.

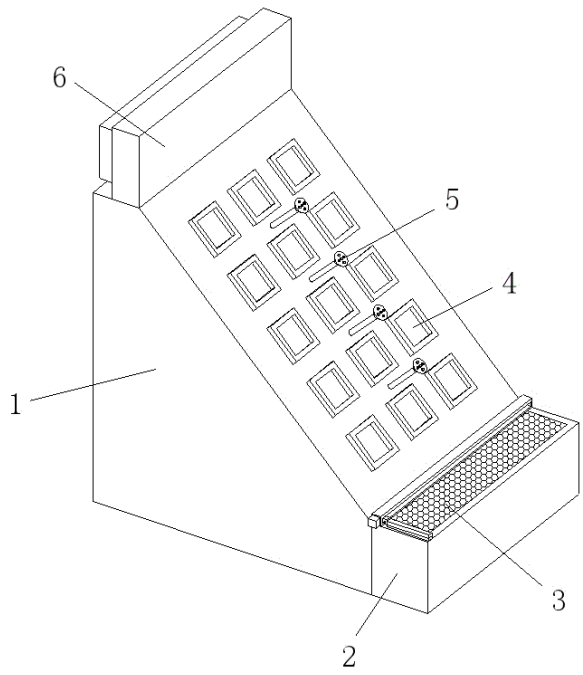

21: 2023/01844. 22: 2023/02/15. 43: 2023/05/11
51: C23C
71: Shenyang University of Technology
72: ZHANG, Hanfang, WANG, Rui, ZHANG, Chunhua, WANG, Tao, WU, Chenliang, ZHANG, Song

54: A POWDER AND METHOD FOR PREPARING HIGH HARDNESS CO-BASED COATING ON STAINLESS STEEL SURFACE

00: -

The invention involves a powder and method for preparing high hardness Co-based coating on stainless steel surface. The Co-based alloy powder is characterized by nominal composition in wt.%: 2.0-2.3 C, 12.0-12.2 Cr, 2.0-2.4 B, 1.2-1.25 Fe, 1.70-1.85 Si, 12.0-12.5 Ni, 34.8-35.0 W, 0.10-0.20 La and balance Co. A technical method for preparing high hardness Co-based coating on stainless steel surface: Step 1: vacuum smelting, gas atomization and sieving; Step 2: drying; Step 3: polish, clean and dry the 316L substrate, and then the powder is melted and deposited on the surface of the 316L substrate; Step 4: conduct plasma welding treatment. The Co-based coating prepared on 316L stainless steel by plasma welding technology is uniform, without pores or other defects, and has good metallurgical bonding with the 316L substrate. The microhardness of the coating is up to 1785 HV, which is nearly 9.4 times higher than that of the 316L substrate (~189HV).

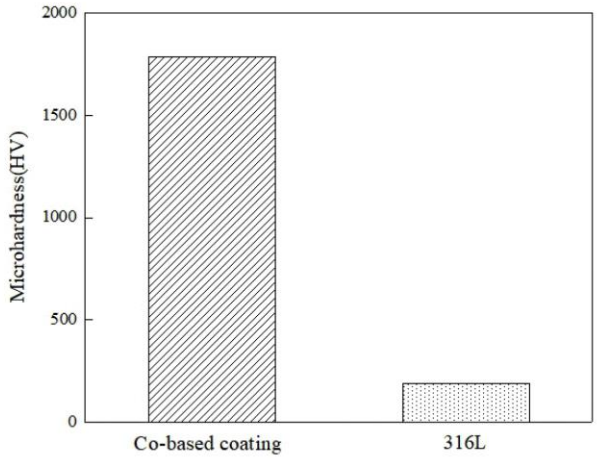

21: 2023/01845. 22: 2023/02/15. 43: 2023/05/12
51: G06Q
71: Dr. Anuradha Banerjee, Dr. Ashutosh Mishra, Dr. Rajiv Harris Peters, Dr Ratnesh kumar, Pragati Banwar, Dhiraj Rajesh Baghel, Dr. Karunesh Tiwari, Dr. Angesh K. Chandra, Dr Rashmi Jaiswal, Dr. (Ms.) Aradhana Dhanaraj, Preeti Nema
72: Dr. Anuradha Banerjee, Dr. Ashutosh Mishra, Dr. Rajiv Harris Peters, Dr Ratnesh kumar, Pragati Banwar, Dhiraj Rajesh Baghel, Dr. Karunesh Tiwari, Dr. Angesh K. Chandra, Dr Rashmi Jaiswal, Dr. (Ms.) Aradhana Dhanaraj, Preeti Nema

54: A METHOD FOR MATHEMATICAL MODELING OF THE RESPONSES OF FOCUS GROUP PARTICIPANTS

00: -

The present disclosure relates to a method for mathematical modeling of the responses of focus group participants. The objective with the present disclosure is to provide a technique for mathematically expressing the behavior of focus groups of people, wherein in the proposed technique first, the objectives are determined, followed by the creation of questions and the listing of responses. The responses are then evaluated using the suggested method, which combines cluster analysis with mathematical modelling of responses using Newton's interpolation method (Forward or Backward as applicable). When the values are multiplied by the weight assigned to each individual parameter, the effect of that parameter on the participant's overall opinion is determined.

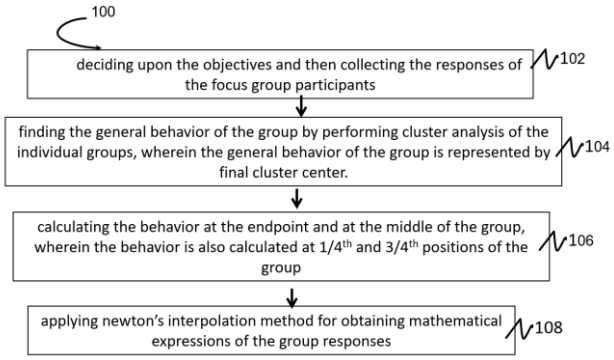

21: 2023/01846. 22: 2023/02/15. 43: 2023/05/12
51: H04W
71: Prabina Pattanayak, Jyoti Mohanty, Ajay Kumar Yadav, Pritam Keshari Sahoo, Yogesh Tripathi, Priyadarshi Kanungo
72: Prabina Pattanayak, Jyoti Mohanty, Ajay Kumar Yadav, Pritam Keshari Sahoo, Yogesh Tripathi, Priyadarshi Kanungo

54: A METHOD FOR PERFORMING EFFICIENT SCHEDULING FOR MULTI-INPUT MULTI-OUTPUT SYSTEM USING BINARY FLOWER POLLINATION ALGORITHM

00: -

The present disclosure relates to a method for performing efficient scheduling for multi-input multi-output (MIMO) system by using binary flower pollination algorithm. The implementation of binary FPA for effective antenna and user scheduling for MU MIMO broadcast channel is described in the current disclosure. In comparison to DPC, binary FPA has been discovered to achieve a significantly greater sum-rate with a significantly lower time cost and computing complexity. Additionally, the binary FPA demonstrated much greater system throughput as compared to the binary BA. These findings are supported by simulation results. As a result, the binary FPA method achieves a solution very quickly and well inside the coherence period for contemporary wireless data transmission. Thus, from the findings of the present disclosure it can be concluded that, binary FPA can be a potential alternative of DPC for scheduling.

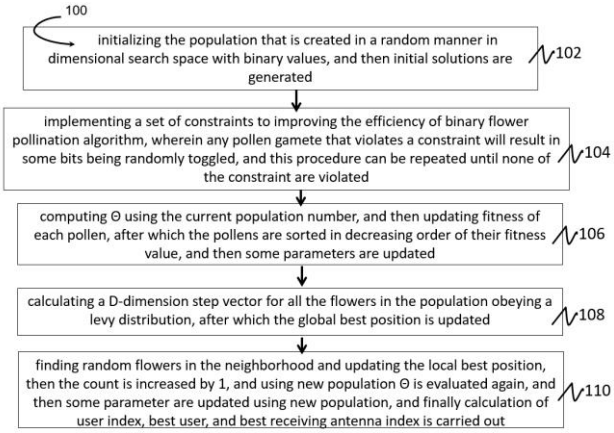

21: 2023/01847. 22: 2023/02/15. 43: 2023/05/12
51: C04B
71: Dr.Rathish Kumar Pancharathi, Dr. Nikhil Kumar Degloorkar, Dr Bhavishya Pancharathi, Dr. Pallavi Gouribatla
72: Dr.Rathish Kumar Pancharathi, Dr. Nikhil Kumar Degloorkar, Dr Bhavishya Pancharathi, Dr. Pallavi Gouribatla

54: A PROCESS OF PREPARING ORGANIC LIME-GGBS MORTARS USING ORGANIC FERMENTED WATER AND ITS COMPOSITION THEREOF

00: -

The present invention generally relates to a process for preparing organic lime-GGBS mortars using organic fermented water comprises mixing 0.5-1.5 wt% of Neredu powder (Syzygium cumini), 0.5-1.5 wt% of Maredu powder (Aegle marmelos), 0.5-1.5 wt% of Aloe vera powder (Xanthorrhoeaceae), 0.5-1.5 wt% of Kadukai powder (Terminalia chebula) and 0.5-1.5 wt% of Palm jaggery (Borassus flabellifer L) into 92.5-97.5% water thoroughly to prepare a solution; fermenting the solution upon leaving it for 3 to 10 days for procuring organic fermented water; and mixing 33 wt% of lime; 66 wt% of GGBS and sand at one time to three times the weight of binder is considered i.e., 100-300 wt% into procured organic fermented water for preparing organic lime-GGBS mortars.

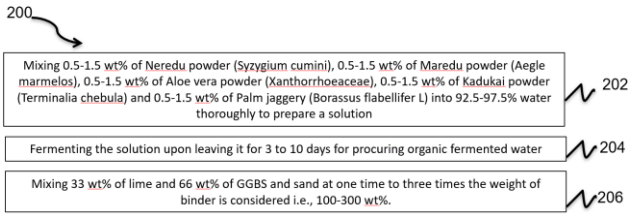

21: 2023/01848. 22: 2023/02/15. 43: 2023/05/12

51: G01N
71: SAYYAD SHAFIYODDIN, SANDIP ANPAT, ASHOK DONGARE, SHAIKH MUDASSAR, MANGESH KOLAPKAR, SANTOSH DUBAL, PATIL GANGADHAR, GAUS MOHIUDDIN SAYYAD, ARUNA MAHAROLKAR
72: SAYYAD SHAFIYODDIN, SANDIP ANPAT, ASHOK DONGARE, SHAIKH MUDASSAR, MANGESH KOLAPKAR, SANTOSH DUBAL, PATIL GANGADHAR, GAUS MOHIUDDIN SAYYAD, ARUNA MAHAROLKAR
54: A DIELECTRIC SPECTROSCOPY SENSOR SYSTEM FOR MEASURING LIQUID DIELECTRIC CONSTANT
00: -
The present disclosure relates to a dielectric spectroscopy sensor system for measuring liquid dielectric constant, wherein a microcontroller based system is employed. With the help of a function generator that produces the appropriate frequency, the suggested system uses the microcontroller's features to measure the dielectric constant of liquids. The function generator XR2206, the P89v51RD2 microprocessor with LCD display, and a specially developed dielectric cell are the components of the hardware design of the created dielectric spectroscopic sensor for detecting the dielectric constant of liquid using a microcontroller. The developed sensor system is cost-effective, lightweight, and simple to use without any programming expertise.

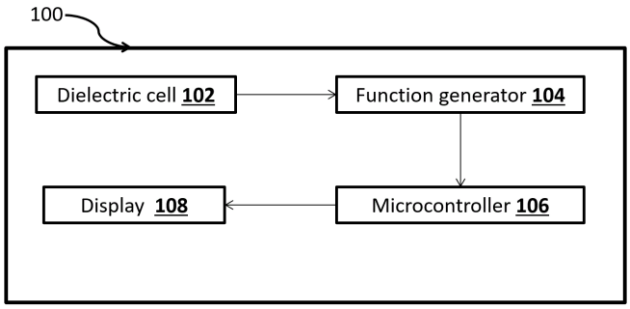

21: 2023/01872. 22: 2023/02/15. 43: 2023/05/12
51: F16K; F16L
71: PIPE TRANSFORMATIONS LTD
72: PATTERSON, Colin
33: GB 31: 2012710.6 32: 2020-08-14
54: IMPROVEMENTS IN PIPELINE NETWORKS
00: -
A pipeline network includes at least one housing comprising a riser and a pipeline connector, the housing adapted to receive a device configured to interact with fluid flowing through the pipeline connector. The riser is provided with a riser closure member that is attachable removably to the riser, and a seal adapted to provide a fluid tight seal between the riser and the riser closure member.

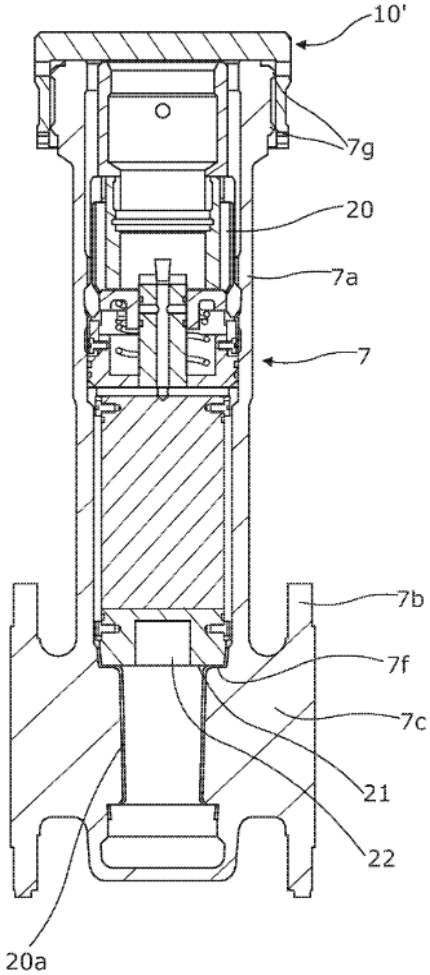

21: 2023/01876. 22: 2023/02/16. 43: 2023/05/09
51: A01N
71: Zhejiang University
72: Rao Jinpeng, Tian Shen, Qiu Feng, Feng Chun, Jin Fan, Jin Min
54: FREEZE-THAW DEVICE FOR GERM CELLS AND EMBRYOS AND ITS USE METHOD
00: -
A freeze-thaw device for germ cells and embryos and its use method. The lower surface of the gyratory oscillating tray is fixedly connected with the output shaft of the first motor, and the liquid outlet pipe slidably passes through the through hole and is fixed on the extension clip through the clamping component; The bottom end of the liquid outlet pipe

is provided with a liquid outlet, and the liquid outlet is located above the opening of the open slot; A driving part which can move up and down along the liquid outlet pipe for sucking or injecting the liquid is connected in the top end of the liquid outlet pipe. Under the joint action of the liquid outlet pipe and the gyratory oscillating tray, the invention makes the germ cells/embryos in an environment where the concentration of freezing and thawing medium is continuously gradually changed in the process of vitrification and thawing in vitro, and avoids the repeated operations such as sucking, blowing, transferring and stirring the embryos by operators, thus effectively reduces the influence of the in vitro environment and artificial operation on the germ cells and embryos, and could be beneficial to the long-term development of the embryos and the safety of offspring born to frozen embryo transfer. At the same time, it also lightens the work intensity of the operators.

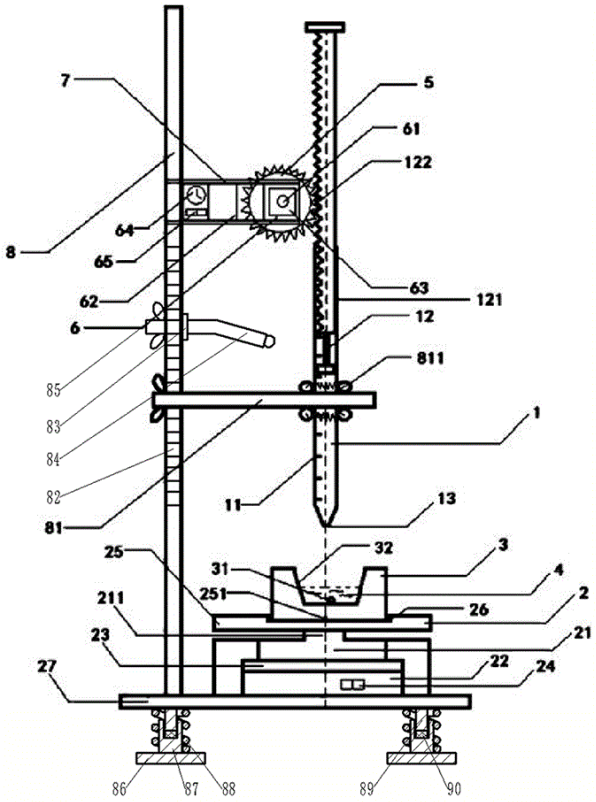

21: 2023/01877. 22: 2023/02/16. 43: 2023/05/09
51: C12N
71: Freshwater Fisheries Research Center of Chinese Academy of Fishery Sciences
72: LIANG, Hualiang, REN, Mingchun, XU, Pao, XU, Gangchun, HUANG, Dongyu

54: METHOD FOR CULTURING PRIMARY MUSCLE CELLS OF COILIA NASUS

00: -

The present invention provides a method for culturing primary muscle cells of Coilia nasus, which belongs to the technical field of cell culture. According to the present invention, sterile muscle tissue of the Coilia nasus is cut into fragments and placed in a culture bottle treated by I-type rat tail collagen, and culture is performed in a primary complete medium after digestion treatment by means of collagenase and trypsin to obtain migrated-out cells, namely the primary muscle cells of the Coilia nasus. The present established in the present invention can obtain high-quality Coilia nasus muscle cells and can perform passage, can be applied to molecular mechanism research related to the Coilia nasus muscle cells, and provides theoretical and technological support for the research.

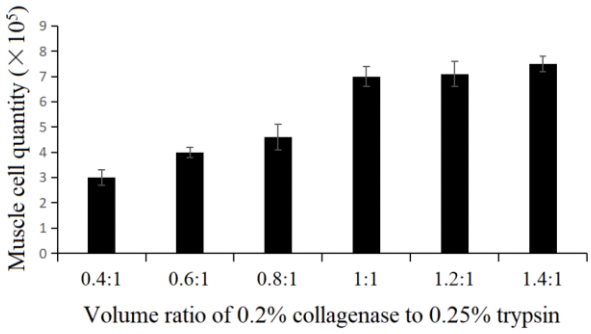

21: 2023/01880. 22: 2023/02/16. 43: 2023/05/09
51: C02F
71: Henan University of Urban Construction
72: ZHANG Zhiyuan, DONG Zhaofeng, ZHANG Lilin, ZHOU Hengtao, JU Rui, WEI Dong, SHAO Di, LI Xuhui, HAN Xiaolei, ZHANG Shaozeng, KONG Youfang, YOU Peibo, YANG Yilong, WANG Jing, LIN Haixia, YANG Qingjie, ZHU Ying

54: SLUDGE RECYCLING AND UTILIZING DEVICE

00: -

The invention discloses a sludge recycling and utilizing device, which comprises a thickening device and a digesting device, wherein the thickening device comprises a centrifugal cylinder, a filter cylinder and a sewage collection cylinder which are sequentially nested from inside to outside; the

bottom of the sewage collection cylinder is provided with a frame-type base, and the upper part is provided with a support rod fixedly connected with the filter cylinder; a rotary motor is arranged in the base; the rotary motor is connected with the bottom of the centrifugal cylinder through an output shaft; the output shaft passes through the sewage collection cylinder and the filter cylinder, and the periphery is provided with a protective sleeve which is fixedly connected with the sewage collection cylinder and the filter cylinder; a protective pad is installed in the protective sleeve, and the protective pad is attached to the inner wall of the protective sleeve. The lower side of the sewage collection cylinder is provided with a sewage outlet pipe, the upper end of the centrifugal cylinder is provided with two quick-loading interfaces which are respectively connected with a sludge inlet pipe and a first sludge outlet pipe, the first sludge outlet pipe is connected with a digesting device, the lower side of the filter cylinder is provided with a second sludge outlet pipe which passes through the sewage collection cylinder, and the second sludge outlet pipe is connected with the digesting device; the upper end of the digesting device is provided with a gas collector, and the lower side is provided with a discharge port. The invention improves the utilization rate of sludge through double filtration.

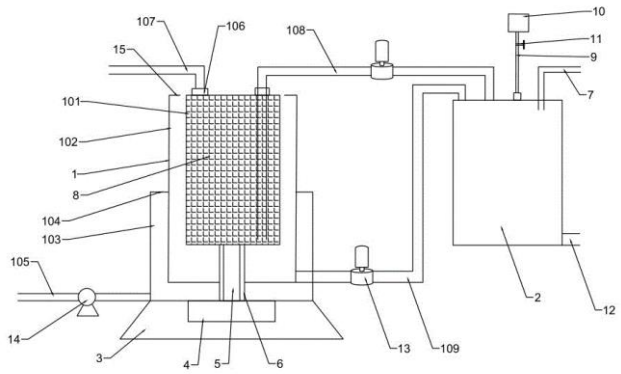

21: 2023/01881. 22: 2023/02/16. 43: 2023/05/09
51: C12N
71: Guangxi Academy of Sciences
72: WANG Xiaohu, ZHOU Liqin, HE Shuang, WEI Shengbo, YE Liujian, ZHU Qixia
54: METHOD FOR PREPARING PROTEASE WITH ANTIBACTERIAL ACTIVITY AND APPLICATION THEREOF
00: -
The invention relates to the technical field of microorganisms, and in particular to a method for preparing protease with antibacterial activity and application thereof.. The Bacillus amyloliquefaciens strain of the invention has a good inhibitory effect on bacteria, and the fermentation product is subjected to protein separation by using a protein separation column Superdextm7510/300GL; gamma-glutamyltransferase with antibacterial effect on Aspergillus is obtained at the No.1 peak, and glycerophosphodiester phosphodiesterase with good antibacterial effect on Salmonella is obtained at the No.5 peak. The further application of the metabolite is studied, and the experimental results show that the gamma-glutamyltransferase obtained from the No.1 peak has good antibacterial effect on food preservation

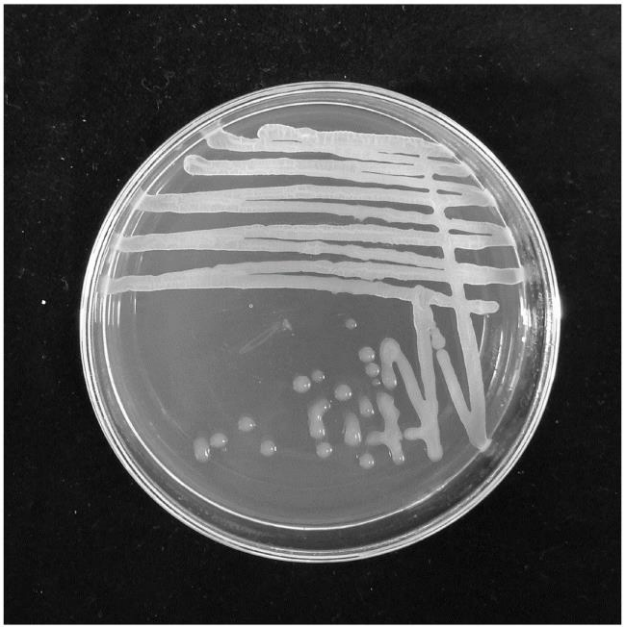

21: 2023/01882. 22: 2023/02/16. 43: 2023/05/09
51: A01G
71: Dryland Farming Institute, Hebei Academy of Agricultural and Forestry Science
72: WANG Bianyin, GUO Anqiang, LIU Binhui, ZHANG Wenying, CHEN Zhaoyang, WANG Qian
54: WATER-SAVING AND DROUGHT-RESISTANT DEVICE FOR AGRICULTURE
00: -
The invention discloses a water-saving and drought-resistant device for agriculture, which comprises a plurality of U-shaped plates, wherein the outer side walls of the U-shaped plates are fixedly connected

with a cover shell; the top of the cover shell is detachably connected with an obliquely arranged rain collecting plate; the end of the rain collecting plate far away from the cover shell is a low end; a gap is arranged between the low end of the rain collecting plate and the outer side walls of the U-shaped plate; and the U-shaped plates, the cover shell and the rain collecting plate are enclosed to form a water storage cavity; water inlet branch pipes communicated with the water storage cavity are installed on the rain collecting plate, and a plurality of water inlet branch pipes are respectively communicated with the water inlet main pipe; the bottom of the U-shaped plate is provided with a plurality of water outlet holes communicated with the water storage cavity, and a water outlet adjusting assembly is installed on the U-shaped plate. According to the invention, water can be directly poured around the root system of the plant, and can be directly and effectively absorbed by the root system of the plant; at the same time, the water outlet amount of the water outlet holes can be adjusted, so that the utilization rate of water resources is greatly improved, and the usage amount of water resources is reduced; moreover, sunlight can be prevented from directly irradiating the soil around the plant, and water evaporation is reduced.

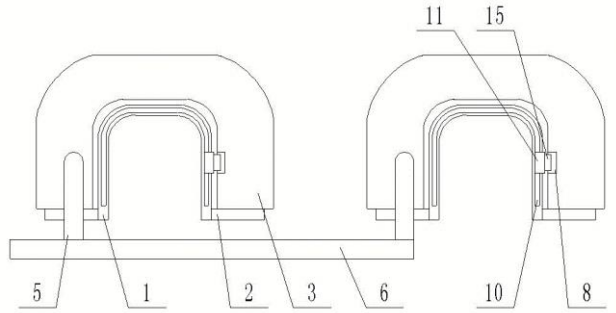

21: 2023/01884. 22: 2023/02/16. 43: 2023/05/09
51: C02F
71: Henan University of Urban Construction
72: ZHOU Hengtao, ZHANG Zhiyuan, JU Rui, ZHANG Lilin, KONG Youfang, DONG Shanshan, CHEN Honglin, WANG Xutao, FU Haoka, WANG Jing, LIN Haixia, LI Linjie, ZHUANG Zhijian
54: SLUDGE INTEGRATED TREATMENT DEVICE
00: -
The invention discloses a sludge integrated treatment device, which comprises a dewatering cylinder; a rotating cylinder is arranged in the dehydration drum; the wall of that rotating cylinder is a net structure; the top surface of that dewatering cylinder is communicated with a feeding pipe; the cent of that top surface of the dewatering cylinder is fixedly connected with a rotary motor; the output shaft of that rotary motor passe through the top surface of the dewatering cylinder and is connected with a rotating rod in a transmission way; the bottom surface of the rotating rod is fixedly connected with a rotating frame; the top of the outer wall of the rotating cylinder and the inner wall of the dewatering cylinder are provided with sealing rings; the bottom surface of the dewatering cylinder is open; the bottom surface of the rotating cylinder is in sliding connection with the bottom surface of the inner cavity of the dewatering cylinder; a drainage cavity is formed between the inner wall of the dewatering cylinder and the outer wall of the rotating cylinder; the bottom surface of the dewatering cylinder is communicated with a drainage pipe; one end of the drainage pipe is communicated with the drainage cavity; the other end of the drainage pipe is communicated with a heating mechanism; the bottom surface of the inner cavity of the dewatering cylinder is provided with a blocking mechanism; the bottom surface of that dewatering cylinder is provide with a drying shell; a drying mechanism is arranged in the drying shell; the side surface of the drying shell is provided with a combustion mechanism; the heating mechanism is arranged on the top surface of the combustion mechanism.

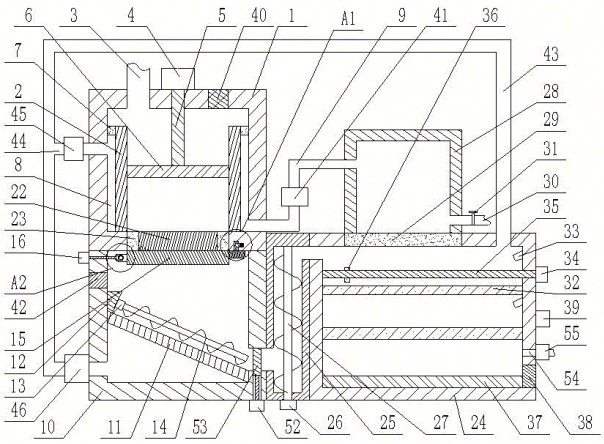

21: 2023/01885. 22: 2023/02/16. 43: 2023/05/09
51: E21D
71: Hunan City University

72: YANG Rihua
54: BRIDGE SUPPORT ADJUSTING DEVICE FOR BRIDGE CONSTRUCTION
00: -
The invention discloses a bridge support adjusting device for bridge construction, which comprises a base, wherein a plurality of supporting feet are installed at the bottom end of the base, walking assemblies are installed in the inner cavities of the supporting feet, and a plurality of ground nails are detachably connected to the supporting feet; a lifting mechanism, where lifting mechanism comprises a plurality of lifting rods fixedly connected to the top surface of the base, and a top plate is fixedly connected between the output ends of the lifting rods; an adjusting mechanism, where the adjusting mechanism comprises a plurality of supporting plates which are slidably connected to the top plate, and a plurality of locking assemblies are arranged between the supporting plates and the top plate. The invention has the advantages of simple structure, convenient use, flexible adjustment and high stability, and can quickly complete the support adjustment of bridge construction, reduce the support cost and improve the construction efficiency.

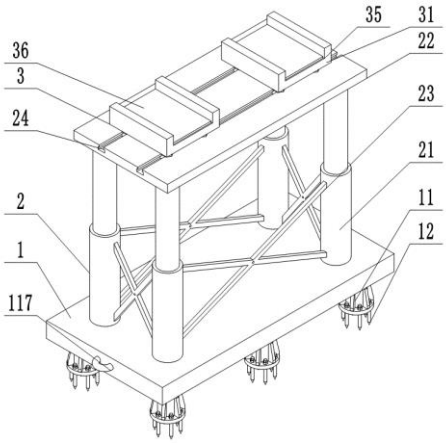

21: 2023/01886. 22: 2023/02/16. 43: 2023/05/09
51: B23P
71: Anhui Polytechnic University, Ningbo University of Finance & Economics, Zhejiang XCC Group Co., LTD
72: Yan Shuping, Zhang Yubin, Wang Fengtao, Yu Chunlan, Zhu Huomei, Wang Huafeng
54: BEARING ASSEMBLY DEVICE
00: -
The invention provides the bearing assembly device. And the bearing assembly device comprises a horizontal supporting plate, and the upper surface of the horizontal supporting plate is provided with a chute, and the upper surface of the horizontal supporting plate is provided with a side plate at the rear side of the chute. By designing spiral conduit, hose, bump and inclined horizontal support plate, the bearing lateral ring can automatically roll down to the designated position and automatically turn to horizontal, and the vertical speed of the ball is reduced to prevent the ball from falling. By designing the pushing device and adsorbing the magnet on the lower side, simplifying the structure of the device, reducing the moving distance of the bearing lateral ring, and the position of the bearing lateral ring can be quickly moved. And by designing the second motor, the second telescopic rod, the fourth telescopic rod and the third motor, the invention realizes that the device can quickly position the balls and install the limiting displacement block of the bearing, thus increasing the assembly efficiency.

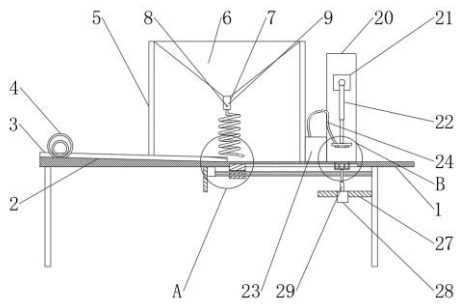

21: 2023/01887. 22: 2023/02/16. 43: 2023/05/09
51: G01N
71: Nanchang Institute of Technology
72: Jinwen Xia, Lichao Zhang, Xianghui Lu, Fan Ma, Haina Zhang, Jianmin Zhao, Peilin Ge
54: A SOIL LOSS MONITORING DEVICE
00: -
The invention discloses a soil loss monitoring device, belonging to the technical field of soil loss monitoring. It includes a retaining rod. A solar panel is arranged on the top of the fixing rod, and a rotating component is arranged between the bottom of the solar panel and the upper end of the fixing rod. One side surface of the middle section of the fixed rod is provided with a bearing box, and the upper end of the bearing box is provided with a rainproof component. The invention provides a rotating module, which enables the rotating shaft of the driving motor to drive the rotating disk to rotate,

thus driving the solar panel to rotate, so that the daylight surface of the solar panel is always perpendicular to the direction of sunlight incidence, and effectively improves the energy conversion efficiency of the whole system. The invention is provided with a rainproof component, the upper end of the bearing box is provided with a rainproof plate, so that the rain can be shielded, which can avoid the bearing box wet, which can play a good rainproof effect. And the UV protection layer on the surface of the rainproof board can play a sunscreen effect, which can avoid the internal temperature of the bearing box is too high in summer.

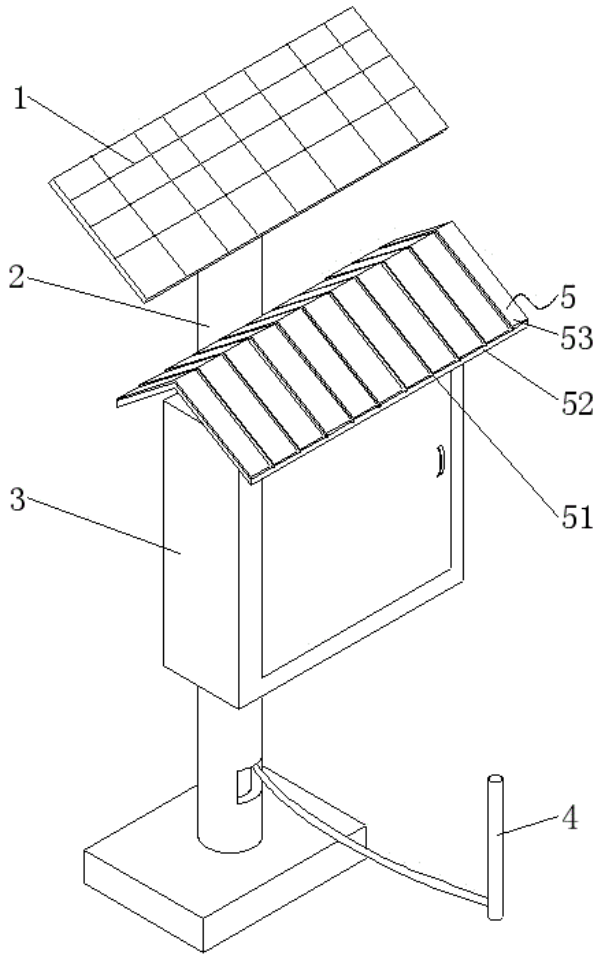

21: 2023/01888. 22: 2023/02/16. 43: 2023/05/09
51: E04B
71: Henan University of Urban Construction
72: YOU Peibo, WU Wanying, YANG Qingjie, WEI Dong, SHAO Di, LI Xuhui, HAN Xiaolei, ZHANG Shaozeng, ZHANG Zhiyuan, YANG Yilong, LI Peng, WANG Jing, LI Taifeng, LIN Haixia, ZHU Ying, LI Ying

54: STEEL PIPE COMPOSITE COLUMN AND CONSTRUCTION METHOD THEREOF

00: -

The invention relates to a steel pipe composite column and a construction method thereof. Comprise an outer steel pipe, an inn corrugated pipe and a plurality of connecting plates, wherein a plurality of first hanging strips are uniformly fixed on that inner circumferential surface of the outer steel pipe, the cross sections of the first hanging strips are C-shaped, the inner corrugated pipe and the connecting plates are made of fiber-reinforced composite materials, the corrugated grooves on the inner corrugated pipe are spiral, and the outer circumferential surface of the inner corrugated pipe is integrally fixed with second hanging strips which correspond to the first hanging strips one by one; the connecting plate includes two layers of corrugated plates and two inserting plates symmetrically connected at both ends of the two layers of corrugated plates. The connecting plate is respectively inserted between a group of corresponding first hanging strips and second hanging strips through the inserting plates. Fiber concrete is poured in the outer steel pipe, and the cavity in the outer steel pipe is filled through any upper and lower adjacent corrugated plates and through holes. It has in multiple directions, can effectively absorb vibration energy, avoid structural damage, and all parts of the group are tightly connected and are not easy to be separated.

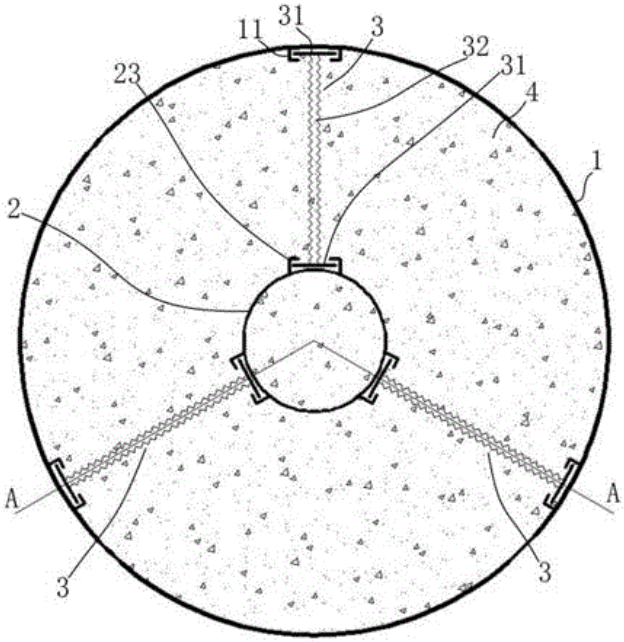

21: 2023/01891. 22: 2023/02/16. 43: 2023/05/09
51: D06F
71: Anhui Polytechnic University, Anhui Suli Technology Co., Ltd
72: WEI Yuhui, WAN Zihao, SU Zhaowei, ZHANG Zhenlin, WANG Peng, LING Xue, WANG Gangyu, ZHENG Chen, XIE Yuanyuan, QIU Wenbo, PAN Wei

54: CLOTHES WASHING AND DRYING DEVICE AND METHOD WITH SELF-ADAPTIVE REGULATION FUNCTION

00: -

The invention discloses a method for realizing personalized service and efficient washing and drying of clothes by using users' daily usage data as the adaptive regulation basis of washing and drying parameters of clothes washing and drying device, which belongs to the algorithm design technology of household appliances, and is used to solve the problem that the existing daily washing and drying equipment of clothes can't adjust and control the washing and drying equipment adaptively according to users' usage requirements or habits, and realize intelligent recommendation or intelligent matching of its personalized usage parameters, which leads to water consumption, energy consumption, time consumption and damage to clothes in the washing and drying stage, and it is difficult to meet users' personalized washing and drying. Specifically, the method comprises the following steps: acquiring user's usage habit data parameters with the help of intelligent clothing component identification module, clothing weight testing module, washing and drying process parameter monitoring module, and detergent dosage monitoring module, including washing parameters (water temperature, water volume, turn-stop ratio, rinsing times, main washing times, rotation speed, rotation direction, etc.) and drying parameters (heating wire power, wind speed, rotation speed, turn-stop ratio, etc.), and uploading them to a remote server for deep learning. This method is not only applied to household washing and drying equipment, but also to other types of machinery with washing and drying functions, such as industrial washing equipment or industrial drying fluidized bed drying equipment. At the same time, the invention does not involve any change of the internal components of the washing and drying equipment (internal construction and matching generally require a large R&D cost and time), only by adding various signal acquisition modules to obtain the washing and drying parameter information of the user's clothes, and transmitting it to the cloud server for deep learning, and then using the information to make personalized intelligent recommendation of the washing and drying parameters, thus achieving the purpose of high-quality washing and drying of clothes without increasing the cost of internal hardware changes of the washing and drying equipment of enterprises. At the same time, the uploaded washing and drying data of the cloud server can also provide a basis for washing and drying equipment manufacturers to optimize products and personalize services.

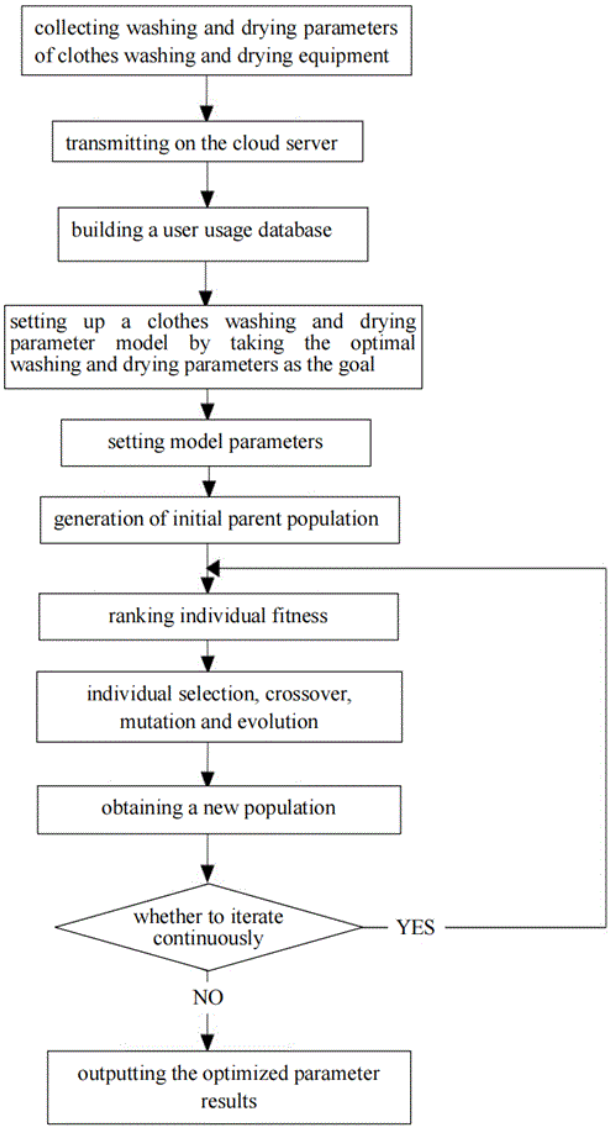

21: 2023/01892. 22: 2023/02/16. 43: 2023/05/09
51: G06K
71: Shenyang University of Technology
72: Ling ZHONG, Xinyue LIU, Tongtong GUAN, Yanhong MENG, Xinyi HAN, Yajie YU

54: AN IMAGE RECOGNITION METHOD BASED ON CNN FUZZY EVALUATION

00: -

The invention disclosures to an image recognition method based on CNN fuzzy evaluation which includes the following steps: S1. Select images that are not conducive to classification and pretreat them; S2. For different pretreatments, MCCNN is constructed respectively to obtain the optimal network structure for each pretreatments, and the optimal CNN structure corresponding to different pretreatment is integrated. S21. Determine the corresponding optimal CNN structure on the pre-treated training set, fix the number of batch samples, and observe the changes of recognition results under different conditions of convolution layer feature maps. S22. Each CNN is integrated to construct a MCCNN, and two CNN structures with the highest recognition rate are selected from each pretreated data set. S3. The MCCNN output is comprehensively evaluated by fuzzy matrix. The invention adopts the above image recognition method based on CNN fuzzy evaluation, which can effectively identify the images collected under different illumination, imaging conditions, occlusion, deformation and other influencing conditions.

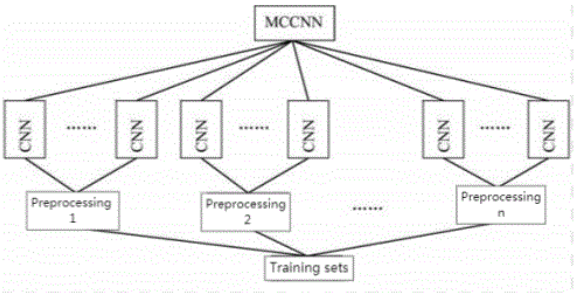

21: 2023/01893. 22: 2023/02/16. 43: 2023/05/09
51: B01D
71: Hainan Tropical Ocean University, Yazhou Bay Innovation Institute of Hainan Tropical Ocean University
72: WAN Wubo, SHI Yaqin, WU Chuntao, ZHONG Shengkui, WANG Zhizhen, HOU Xun

54: OIL-WATER SEPARATION MATERIAL, PREPARATION METHOD AND APPLICATION THEREOF

00: -

The invention discloses an oil-water separation material, a preparation method and an application thereof; the preparation method of the material includes: dissolving basic copper carbonate in alkaline solution to obtain mixed solution I; immersing a glass fiber mat in the mixed solution I to obtain CuO@ glass fiber mat; dispersing carbon nanotubes and sodium dodecyl sulfate in an organic solvent to obtain a mixed solution II; immersing the CuO@ glass fiber mat in the mixed solution II to obtain CuO@ glass fiber mat @ carbon nanotubes; dissolving polydimethylsiloxane in the organic solvent to obtain a mixed solution III; and immersing

the CuO@ glass fiber mat @ carbon nanotubes in the mixed solution III, and curing at high temperature to obtain the oil-water separation material. The prepared material has a good demulsification effect on various emulsified oils due to the super-high hydrophobic and oleophilic properties and the superposable combination mode, being widely applied to oil-water separation operations.

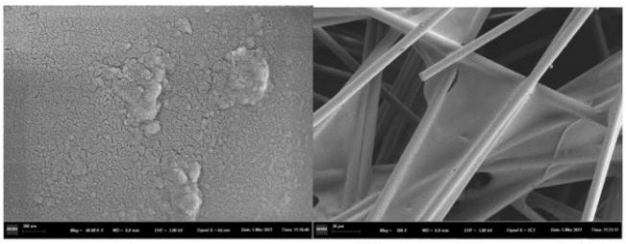

21: 2023/01894. 22: 2023/02/16. 43: 2023/05/09
51: A61B
71: The First Affiliated Hospital of Xinxiang Medical College
72: Junqiang Zhao, Guoan Zhao, Nan'ai Li, Fei Lin, Jinghang Zhang, Yuxi Wang, Ge Lei, Ningyu Li, Shiqin Wei, Yi Yu, Chang Wang, Zhanghong Zhao
33: CN 31: 202222538835.5 32: 2022-09-26
54: A VR HEART RATE INTELLIGENT DETECTION DEVICE
00: -
The invention discloses a VR heart rate intelligent detection device. It comprises a host frame, the host frame is fixed on the inside of the treadmill conveying components, both sides of the host frame are fixed with a supporting arm, two supporting arms are fixed between the display table, the display table is fixed on the internal circuit board; The invention relates to a VR heart rate intelligent detection device, which combines VR technology with a treadmill conveying component, so that users can randomly select exercise scenes according to their preferences in the process of exercise. In the process of exercise, it can let the user have the feeling of being in the scene, so as to make the process of exercise interesting, and it can relax the body and mind. This is conducive to improving the effect of exercise. Through Bluetooth interconnection, the heart rate monitoring wristband is connected to the exercise intelligent detection organization. This enables users to monitor their heart rate in real time in the process of exercise, which is conducive to scientific fitness management and improve the safety of fitness.

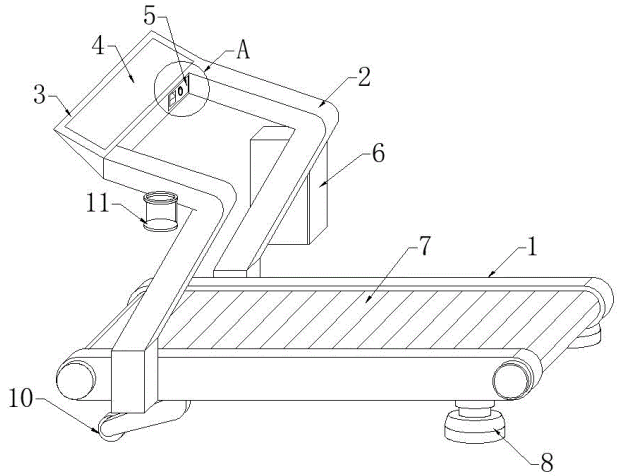

21: 2023/01895. 22: 2023/02/16. 43: 2023/05/09
51: A01H
71: Hunnan Cotton Science Institute
72: Li Yufang, Yang Chunan, Xiao Caisheng, Chen Tingzhou, Fu Lin, He Lu, Bu Yong
54: METHOD FOR RAPIDLY IDENTIFYING EARLY MATURITY OR EXTRA-EARLY MATURITY OF BRASSICA NAPUS
00: -
The invention provides a method for rapidly identifying early maturity or extra-early maturity of Brassica napus, which comprises the following steps: S1: Selection experimental rape varieties; S2: Early sowing of experimental rape varieties; S3: Delayed sowing of experimental rape varieties; S4: Treatment of different growth environments of experimental rape varieties; S5: Recording of rape growth data; S6: Recording of the flowering duration of rape growth; S7: Recording of the maturity time of rape siliques; S8: Observation of rapeseed yield and rapeseed appearance; And S9: Detection of oil content and components of rapeseed. According to the invention, the seeds of experimental rape varieties are sown in two batches, so that the influence of different sowing dates on rape growth can be identified through rape yield; Secondly, the preference of early-maturing rape growth environment is identified through the relevant data of differentiated rape growth environment; Then, by comparing the rapeseed harvested by the seeds of early-maturing rape varieties with those of medium-maturing rape varieties in various growth environments, the growth environment suitable for early-maturing rape can be selected.

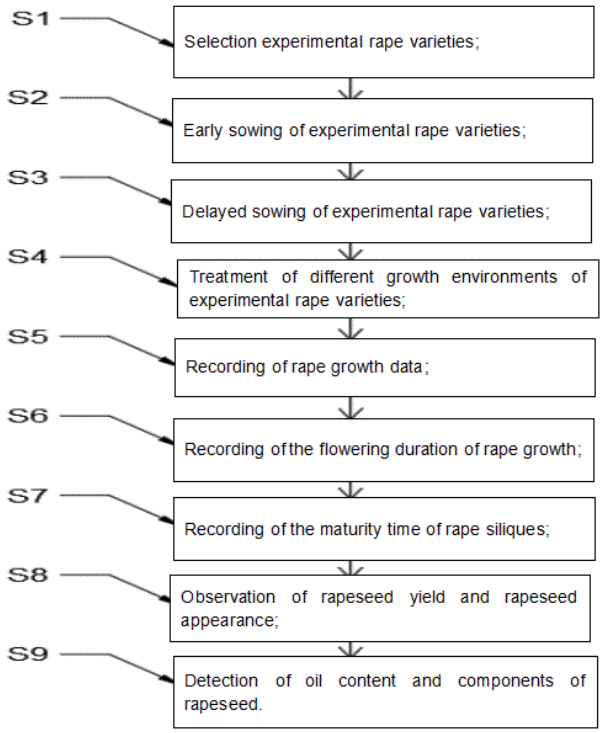

21: 2023/01896. 22: 2023/02/16. 43: 2023/05/09
51: A47G
71: The First Affiliated Hospital of Xinxiang Medical College
72: Junqiang Zhao, Fujun Zhou, Zongya Zhao, Jinghang Zhang, Yong Liu, Jianhua Zhao, Lu Wang, Nan'ai Li, Yuxi Wang, Yanbing Dun, Wu Ren, Ningyu Li
33: CN 31: 202223185761.8 32: 2022-11-30
54: A NEW SMART HEALTH MULTI-FUNCTIONAL PILLOW
00: -
The invention discloses a new smart health multi-functional pillow. It comprises a main body, the bottom of which is fixidly connected with a pillow base, the top of the pillow base is provided with a second middle filling layer, and the first electroencephalogram electroencephalogram acquisition device is installed inside the place where the first electroencephalogram acquisition device is placed. The first magnetic pulse therapy device is installed inside the place where the first magnetic pulse therapy device is placed, and the second electroencephalogram acquisition device is installed inside the place where the second electroencephalogram acquisition device is placed. The second magnetic pulse treatment device is installed inside the place where the second magnetic pulse treatment device is placed, and the top of the second intermediate filling layer is provided with the first intermediate filling layer. Both ends of the top of the main body are provided with side sleeping areas. The invention can monitor brain signals throughout the whole process, monitor whether the brain function is normal, predict brain diseases in advance, and record the trajectory of sleep recovery. It can form personalized sleep big data that can assess sleep quality, which can help patients with sleep disorders improve their sleep status.

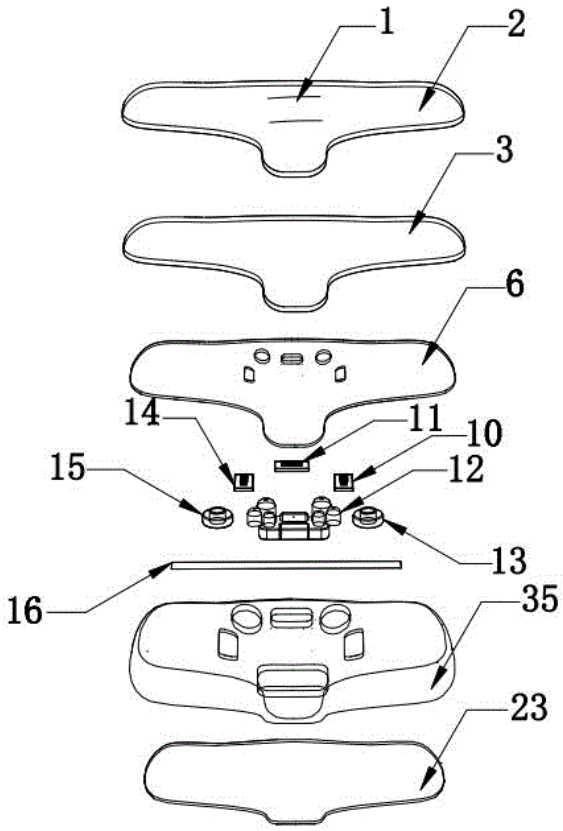

21: 2023/01897. 22: 2023/02/16. 43: 2023/05/09
51: G06F
71: Zhejiang Sci-Tech University
72: Jianyu RUAN, Yingtong WAN, Yuanqian MA
54: TWO-SIDED MATCHING DECISION METHOD OF ELECTRICITY SALES PACKAGE BASED ON DISAPPOINTMENT THEORY
00: -
With the deep reform of the power system, the requirements of power users and power selling companies for the power selling package are

increasing, which puts forward higher requirements for the power selling company to recommend the power selling package, and the existing recommendation methods are unable to make appropriate recommendations for the users with lack of preference information. Therefore, this paper proposes a two-sided matching decision method of electricity sales package based on disappointment theory. First of all, according to the incomplete fuzzy preference relationship provided by the power user and the electricity sales package, the respective priority weight vector is obtained, and then the subjective satisfaction matrix of the power user and the electricity sales package to each other is obtained; Next, the adjusted satisfaction matrix is calculated by adding the influence of the theory of joy and disappointment; Then, based on the adjusted satisfaction matrix, an optimization model aiming at maximizing the total satisfaction of power users and electricity sales packages is established, and the optimal stable matching model of power users and electricity sales packages is obtained; Finally, taking an industrial park in Zhejiang Province as an example, the matching results show the effectiveness and rationality of the two-sided matching decision method of electricity sales package based on the disappointment theory proposed in this paper.

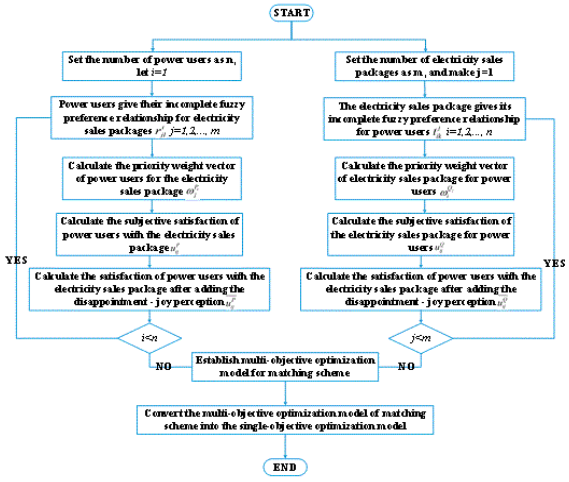

21: 2023/01898. 22: 2023/02/16. 43: 2023/05/09
51: G06F
71: Zhejiang Sci-Tech University
72: Yuhang LIU, Yuchen YIN, Yuanqian MA

54: METHOD AND DEVICE FOR INTEGRATED ENERGY DEMAND FORECASTING OF THE PARK BASED ON THE TRANSFORMER ALGORITHM

00: -

Accurate integrated energy demand forecasting will be the basis for regional integrated energy system scheduling and energy efficiency assessment. At present, in the aspect of integrated energy demand forecasting, there are many problems such as many influencing factors, complex design parameters, low calculation efficiency. Moreover, there is still much room for optimization in long series prediction. Therefore, this paper proposes an integrated energy demand forecasting method based on Transformer algorithm to deal with such problems. Firstly, the screening model of influencing factors of cooling, heating and electricity loads in the park is established, which provides a basis for screening appropriate influencing factors after data preprocessing. Secondly, a similar day method for integrated similarity selection based on Euclidean distance is established, which lays a foundation for the prediction of integrated energy. Then, establish the cooling, heating and electricity loads forecasting model based on Transformer algorithm, which can realize the prediction of integrated energy demand in the park. Finally, a park located in eastern China is analyzed, and the integrated energy demand of the park is predicted. the results show that the proposed prediction method can effectively improve the prediction accuracy.

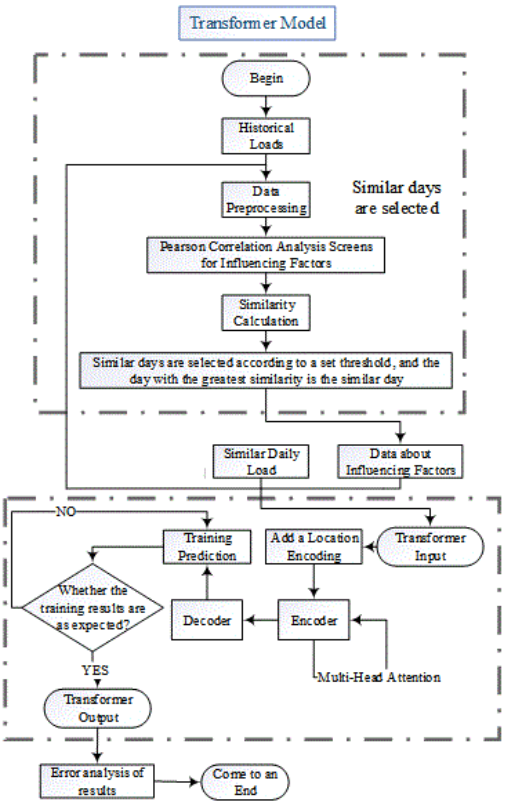

21: 2023/01899. 22: 2023/02/16. 43: 2023/05/09
51: A01G
71: Nanchang Institute of Technology
72: Lichao Zhang, Xianghui Lu, Haina Zhang, Jinwen Xia, Fan Ma, Jianmin Zhao, Rongxiu Xie, Peilin Ge, Hongmei Zhang, Song Guo
54: A SOIL AND WATER CONSERVATION ECOLOGICAL TREATMENT SYSTEM IN THE RARE EARTH TAILINGS AREA
00: -
The invention discloses a soil and water conservation ecological treatment system in the rare earth tailings area, belonging to the technical field of ecological control. The bottom plate comprises a bottom plate, the upper end of the bottom plate is provided with a supporting mechanism, one side of the supporting mechanism is provided with an anti-collapse plate, one end of the anti-collapse plate is provided with a positioning splicing component, the internal bottom of the supporting mechanism corresponding to the bottom plate is provided with a convenient fixed component; By setting a positioning splicing component, the invention can easily and stably splice and install several groups of anti-collapse plates, improve the quality of soil and water conservation of the anti-collapse plate on the rare earth tailings land, ensure the effect of ecological treatment, and adjust the use Angle of the anti-collapse plate along the hinge. This facilitates the enclosure of rare earth tailings land to ensure the quality of equipment use. By setting convenient fixed components, the supporting mechanism can be installed conveniently and quickly. This can improve the quality of anti-collapse plate contact, ensure the stability of equipment use, and can quickly replace the damaged supporting mechanism, save human resources.

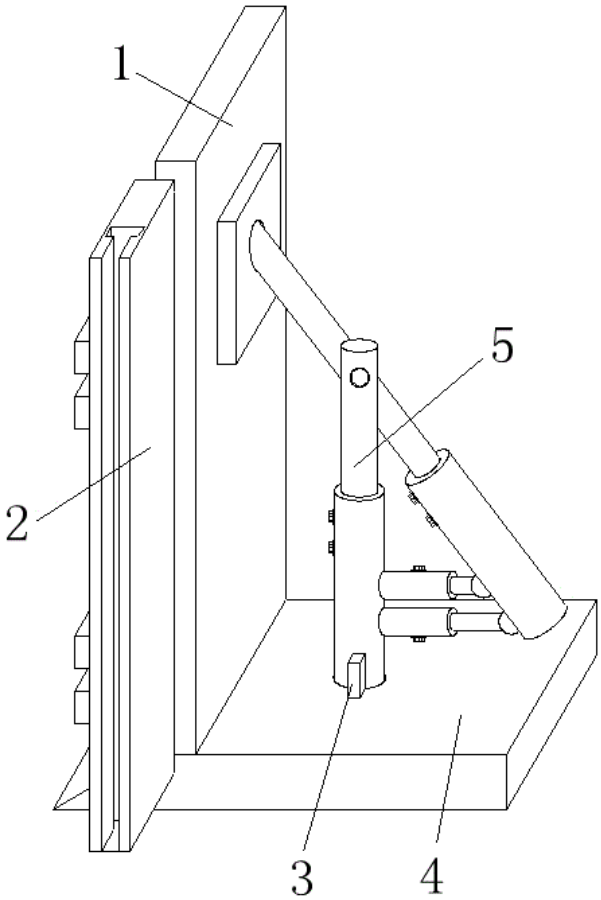

21: 2023/01900. 22: 2023/02/16. 43: 2023/05/09
51: B42C
71: Henan Institute of Economics and Trade
72: Duan Qiuyue, Wang Meng, Liang Shan, Du Xiaoping, Wang Yanfeng, Gao Bin, Liao Wen
54: A NON-INPUT SELF-COMMUTATION DRYING TYPE SECRETARIAL DATA SORTING MACHINE
00: -

A non-input self-commutation drying type secretarial data sorting machine, comprising a stable chassis, a non-input self-commutation drying storage mechanism, a self-centering support mechanism, a flexible buffer type rolling smoothing mechanism, and a launch type support mechanism and a limit transmission mechanism.

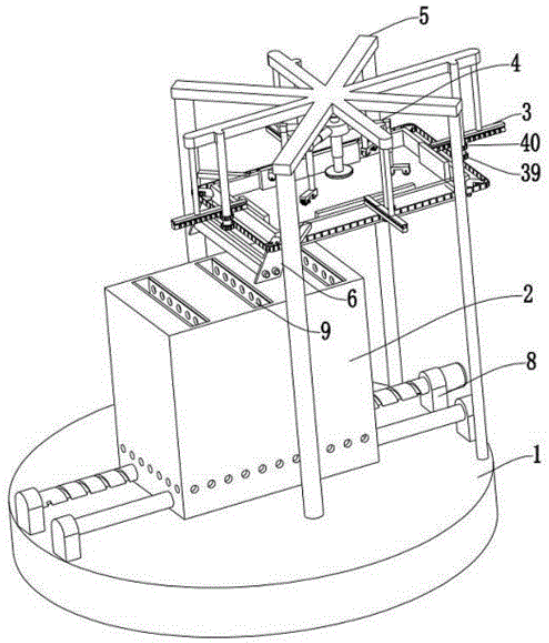

21: 2023/01901. 22: 2023/02/16. 43: 2023/05/09
51: G01N; G01P
71: Institute of Highland Forest Science, Chinese Academy of Forestry
72: Xiaobo Huang, Jiayan Shen, Ruiguang Shang, Shuaifeng Li, Wande Liu

54: A COMPREHENSIVE DETECTION DEVICE FOR INTERIOR ECOLOGICAL ENVIRONMENT OF FOREST

00: -

The invention discloses a comprehensive detection device for the interior ecological environment of a forest, including a protective shell, a height-regulating element, a monitoring component, a rainwater collection barrel, and a device for monitoring precipitation. Rainwater collection barrels, height-regulating elements, and precipitation monitoring devices are installed in the protective shell. An access door is located on the side wall of the protective shell. In the protecting shell, there is an access door at the hinge located at the access hole. A monitoring component is installed on the height-regulating element. On one side of the height-regulating element is installed the precipitation monitoring device. Rainwater collection barrels are installed on one side of the precipitation monitoring devices. At the upper opening of the roof, a rainwater collection barrel is installed. There is a scale line and a floating plate mounted on the side wall of the rainwater collection barrel. The invention pertains to the detection production technology field of the forest environment. Furthermore, it provides an integrated system for detecting the interior ecological environment of a forest. Using this device, the forest can be monitored in real time for precipitation in real time and the height of the monitoring can be conveniently adjusted, thereby ensuring that the data collected is accurate and abundant.

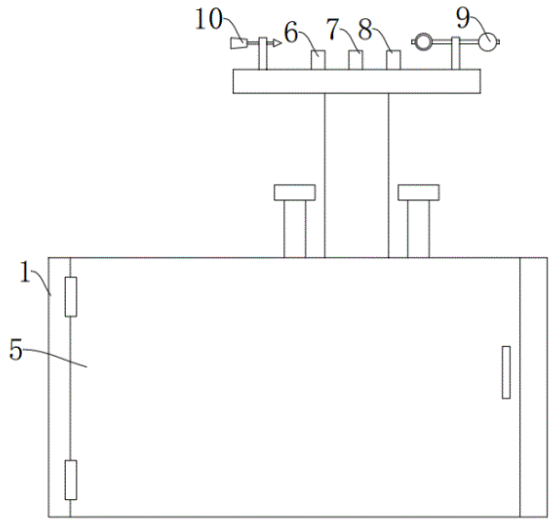

21: 2023/01902. 22: 2023/02/16. 43: 2023/05/09
51: A24B
71: China Tobacco Henan Industrial Co., Ltd.
72: Hongtao Shen, Xinling Yang, Sensen Zhao, Wenchao Zheng, Xiaohui Miao, Xinzhong Wang, Guangting Yin
33: CN 31: 202211680778.2 32: 2022-12-27

54: A PREPARATION METHOD OF CIGAR-FLAVORED PIPE TOBACCO

00: -

The invention belongs to the technical field of tobacco preparation, in particular relates to a preparation method of cigar-flavored pipe tobacco, including the following steps: Step 1: the tobacco leaves are cleaned by distilled water, and clean tobacco leaves are obtained; Step 2: Put the leaves

in the tobacco leaf into the silk cutter for cutting, with a width of 0.18-0.22mm; Step 3: Dry the tobacco, freeze dry it, and then stir fry it until it is coked to get the coked tobacco; Step 4: Soak the coke tobacco in the soaking solution for 2-5h, and then purge at a constant temperature for 20-30min to get the prefabricated tobacco. Step 5: Spray atomizing agent on the surface of the prefabricated tobacco and let it stand for 20-30min to get atomized tobacco; Step 6: Ferment the atomized tobacco to get cigar-flavored pipe tobacco. The invention solves the defect of the existing flavor bucket tobacco, and forms the cigar flavor of the bucket tobacco by means of in situ coke drying and spray penetration of the pipe tobacco, enriching the taste of the bucket tobacco and filling the gap in the market.

21: 2023/01903. 22: 2023/02/16. 43: 2023/05/09
51: E03F
71: Nanchang Institute of Technology
72: Lichao Zhang, Hongguang Liu, Xuhua Huang, Peilin Ge, Jinwen Xia, Yingchun Liao, Yi Ouyang, Yuejun Song, Minghao Mo, Yanxin Pan, Lei Lei
54: A NEW TYPE OF ECOLOGICAL GRASSED WATERWAY
00: -
The invention discloses a new type of ecological grassed waterway, which belongs to the technical field of rainwater management. The utility model comprises a green space, wherein the green space is provided with a grassed waterway, the grassed waterway is arranged at the lower end of the planting soil layer, the lower end of the planting soil layer is provided with an aquifer, the lower end of the aquifer is provided with a filter layer, and the middle position of the upper end of the planting soil layer is provided with an intercepting dam. The invention provides a filter component on the upper end of the overflow pipe, a filter screen is placed on the upper end of the overflow pipe, and then two bent levers are pulled. The bent lever drives the limit plate to move in the cavity, while the spring is compressed. Then the top cover is set at the upper end of the overflow pipe, the filter screen into the top cover slot, and then loosen the bent lever. The spring extends one end of the bent lever into the hole at both ends of the overflow pipe to achieve the effect of fixing the top cover and the filter screen. By setting the filter component, the water entering the overflow pipe can be filtered through the filter screen when the overflow pipe is in use. This prevents impurities such as leaves from entering the overflow pipe and clogging it.

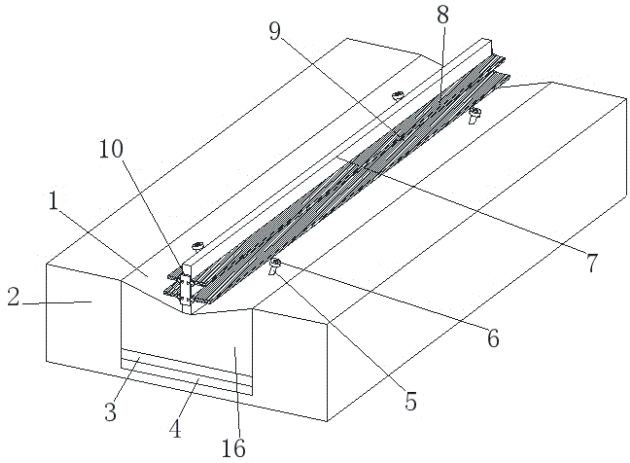

21: 2023/01904. 22: 2023/02/16. 43: 2023/05/09
51: G06K
71: Dr. Amit Sharma, Dr. Vikram Bali, Dr. Sonali Mathur, Dr. Sandeep Kumar
72: Dr. Amit Sharma, Dr. Vikram Bali, Dr. Sonali Mathur, Dr. Sandeep Kumar
33: IN 31: 202211065006 32: 2022-11-14
54: A DIGITAL PAYMENT SYSTEM FOR TRANSACTION OF MONEY THROUGH FACE RECOGNITION AND METHOD THEREOF
00: -
The present invention discloses a digital payment system for transaction of money through face recognition and method thereof, which comprises: a point-of-sale device installed at a check-cashing entity, the point-of-sale device configured to obtain data about one or more authenticating marks on a check associated with a proposed check transaction, the point-of-sale device further configured to obtain a front and back image of the authenticating mark; a database of information about authenticating marks; a computer processor configured to receive the data from the point-of-sale device and to compare the data with information stored in the database; a transaction instrument; a check authorization system set up to calculate a risk score based on the comparison, and then use that score as a factor in deciding whether or not to approve the check transaction; a camera for capturing images of a user; at least one sensor to detect the user; a processor for receiving information from the at least one

sensor; a memory for storing instructions executable by the processor; a database for storing, monitoring and accessing predefined information of the user; and a user interface.

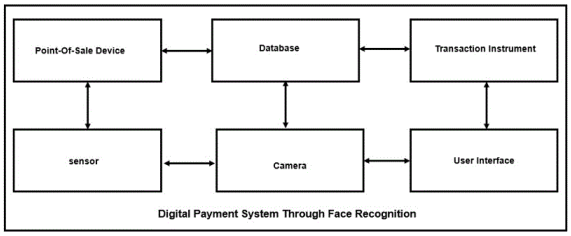

21: 2023/01908. 22: 2023/02/16. 43: 2023/05/09
51: A45B
71: DR. VISHWANATH KARAD MIT -WORLD PEACE UNIVERSITY, GUTTE, Vitthal, GUPTA, Mansi, LADDHA, Aditi, MISHRA, Yashasvi, CHOUHAN, Maahi, LILHA, Aayushi
72: GUTTE, Vitthal, GUPTA, Mansi, LADDHA, Aditi, MISHRA, Yashasvi, CHOUHAN, Maahi, LILHA, Aayushi
54: A HANDY OBSTACLES DETECTION SMART STICK
00: -
Our aim is to design a cost efficient and feasible smart stick that helps visually impaired people to walk readily on roads by receiving obstacle warnings and weather alerts, to make navigation secure by notifying the guardian of user's location by emergency button and to lessen user's reliance on other people or guide dogs.

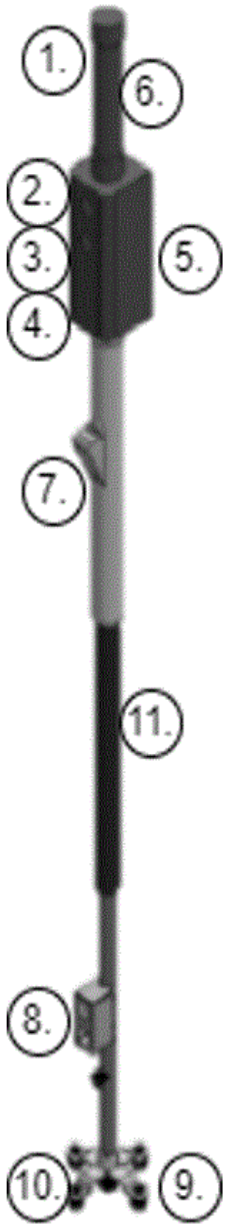

21: 2023/01909. 22: 2023/02/16. 43: 2023/05/09
51: G06F
71: Hebei University of Engineering, Zhangzhi River irrigation water supply Management Office of Handan City, South-to-north Water Diversion Middle Route Information Technology Co. LTD
72: Zhang Yinqin, Li Bin, Wu Wenfeng, Liu Meiyu, Wang Dong, Li Yulong, Cai Jinshan, Guo Jie, Luan Qinghua
33: CN 31: 202310082229.3 32: 2023-02-08
54: METHOD AND SYSTEM FOR CALCULATING RIVERWAY WIDTH BASED ON SATELLITE IMAGES
00: -

The invention is suitable for the technical field of riverway width measurement, and provides a method and a system for calculating riverway width based on satellite images, which comprises the following steps: receiving the uploaded satellite images, extracting the water body by using the water body index method NDWI(Normalized Difference Water Index), determining the riverway area, and calculating the average width of the riverway area to obtain the first riverway width; determining the riverway center line according to the riverway area, receiving the minimum dividing length, dividing the riverway center line into a plurality of sections, and simultaneously dividing the riverway area into a plurality of river sections; receiving the laser ranging width of a certain section of the river and the river section on the satellite image selected by the user, wherein the laser ranging width is the real width of the river section; determining the error ratio according to the laser ranging width and the first riverway width of the corresponding river section, the riverway area is corrected according to the error ratio to obtain a corrected riverway, and the average width of the corrected riverway is calculated to obtain the second riverway width. In this way, the corrected riverway is very close to the real riverway, and the second riverway width is basically equal to the real riverway width.

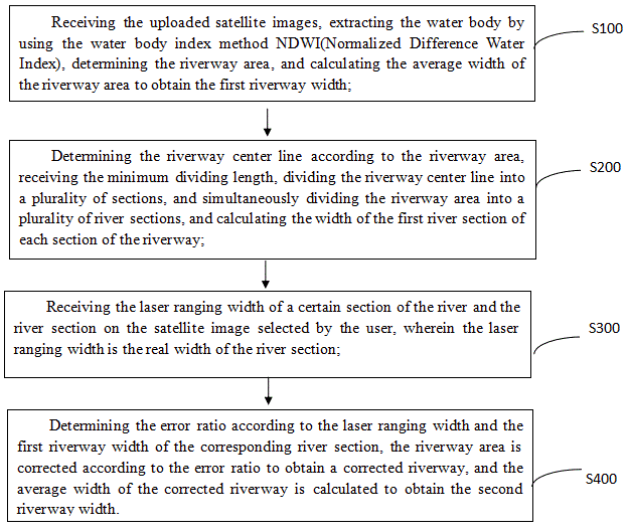

21: 2023/01910. 22: 2023/02/16. 43: 2023/05/09
51: C05G
71: Zhejiang Academy of Agricultural Sciences
72: Ma Jinchuan, Pan Jianqing, Tao Juanhua, Zou Ping, Ma Junwei, Wang Qiang, Sun Wanchun

54: FOLIAR FERTILIZER AND ITS APPLICATION METHOD FOR REDUCING CADMIUM ACCUMULATION IN RICE AND INCREASING YIELD

00: -

The invention relates to the field of agriculture, and discloses a foliar fertilizer for reducing cadmium accumulation in rice and increasing yield and an application method thereof. The foliar fertilizer comprises the following components in parts by weight: 40-80 g of NH_4HCO_3, 100-200 g of KH_2PO_4, 1.0-3.0 g of humic acid, 200-300 g of $NaSiO_3 \cdot 9H_2O$, 1.0-1.2 g of Na_2SeO_3, 1.0-1.5 g of Zn, 0.5-1 g of Fe, 1.5-2 g of Mg, 6.0-8.0 g of S, and 0.5-1.0 g of Ca. The foliar fertilizer of the invention can reduce the content of cadmium in rice and increase the rice yield. During the spraying process of the foliar fertilizer, an increasing concentration method is adopted, so that the damage of rice plants and yield reduction caused by early application of the foliar fertilizer with excessive concentration can be avoided. In the later stage, increasing the concentration of fertilizer can improve the effect of inhibition and control, and promote the maturity of rice.

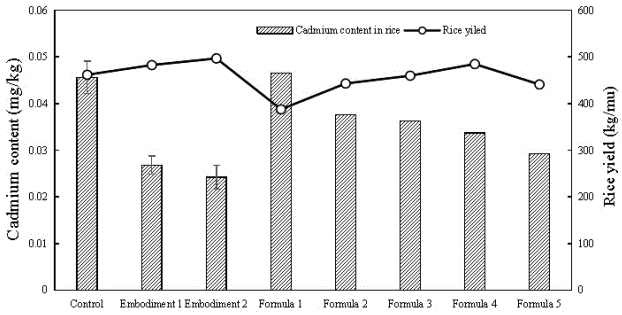

21: 2023/01943. 22: 2023/02/17. 43: 2023/05/09
51: C08F
71: Guang'an Vocational And Technical College, Sichuan Polyseed Polymer Materials Co., Ltd.
72: LI, Yuanpeng, WU, Xun, LI, Zhukai, TANG, Liping, REN, Yinguang, DUAN, Wenjiang

54: OPEN-CELL POLYVINYL FORMAL FOAM MATERIAL AND PREPARATION METHOD THEREOF

00: -

The present invention provides an open-cell polyvinyl formal (PVF) foam material and a preparation method thereof. The preparation method

includes the following steps: mixing and dissolving PVA with a high polymerization degree and PVA with a low polymerization degree, and reacting with formaldehyde in the presence of acid to yield an open-cell PVF foam material. The method does not require any cell-forming functional additive such as a foaming agent and a porogen and has the advantages of novelty, unique route, and preparation of PVF foam materials with good comprehensive performance.

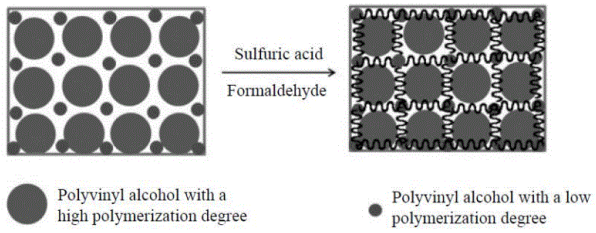

21: 2023/01944. 22: 2023/02/17. 43: 2023/05/09
51: H01R; H04L
71: Jiaxing Vocational and Technical College
72: WU, Rongsen, DAI, Shaoqing, CHEN, Shuangxi, GU, Guangbing, ZHANG, Huihui, YAO, Anyan, WANG, Saibo

54: MULTIFUNCTIONAL INTERNET OF THINGS SOCKET

00: -

Disclosed is a multifunctional Internet of Things socket. The multifunctional Internet of Things socket includes an upper lamp panel, a left bracket, a camera, a display screen, a left bracket switch, a connecting shaft, a lamp bracket, a lamp switch, sockets, socket holes, USB interfaces, socket switches, a base, a power cord, an audio and video storage module, an oxygen concentration sensor, a face matching module, a left bracket switch, a general microprocessor, a WIFI relay module, a SIM card communication module, a wireless communication module, a temperature sensor, a humidity sensor, infrared remote control modules, microprocessors, timing/time delay circuits and a brightness sensor. The present invention can realize LED lamp lighting, video chat and monitoring abnormal alarm, temperature and humidity detection, WIFI relay, and oxygen concentration detection and abnormal alarm. The upper lamp panel has functions of a handle and lighting, thus reducing a desktop space.

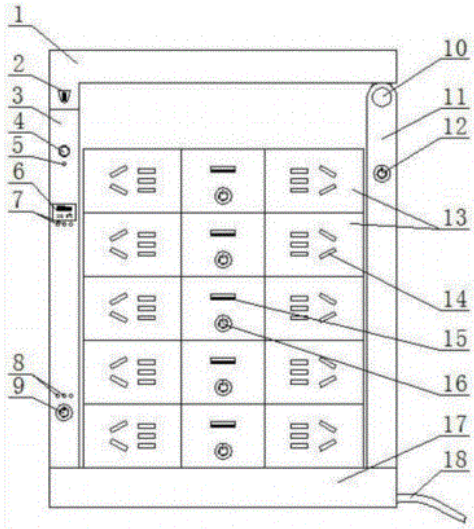

21: 2023/01946. 22: 2023/02/17. 43: 2023/05/09
51: A01K
71: Guangdong AIB Polytechnic College
72: YANG Zhi, ZOU Xinyao, LIU Yating, QIU Jiabao, CHEN Weihao

54: INTELLIGENT AGRICULTURAL BAIT AUTOMATIC FEEDING ROBOT

00: -

The invention disclose an intelligent agricultural bait automatic feeding robot, which comprise a feeding box and a weighing part, wherein that weighing part is arranged in the feeding box and communicate with the top end of the feeding box; the separate part is arranged below that weigh part, the feeding end of the separating part is communicated with the discharge end of the weigh part, and the separating part is rotatably connected with the inner wall of the feeding box; the throwing part is arranged below the separating part, and comprises a plurality of feeding pipes arranged in parallel, wherein the feeding pipes are fixedly connected with the inner wall of the feeding box, the feeding ends of the feeding pipes are communicated with the discharging ends of the separating part, and the discharging ends of the feeding pipes are correspondingly arranged with the fish pond; the air supply part is arranged outside the feeding box, and is communicated with a plurality of feeding pipes through a pressurizing part, and the pressurizing part is in transmission connection with the separating part. According to the invention, the feeding range of bait can be expanded, so that fish can eat conveniently; in addition, the fed bait can be weighed to meet the growth requirements of fish.

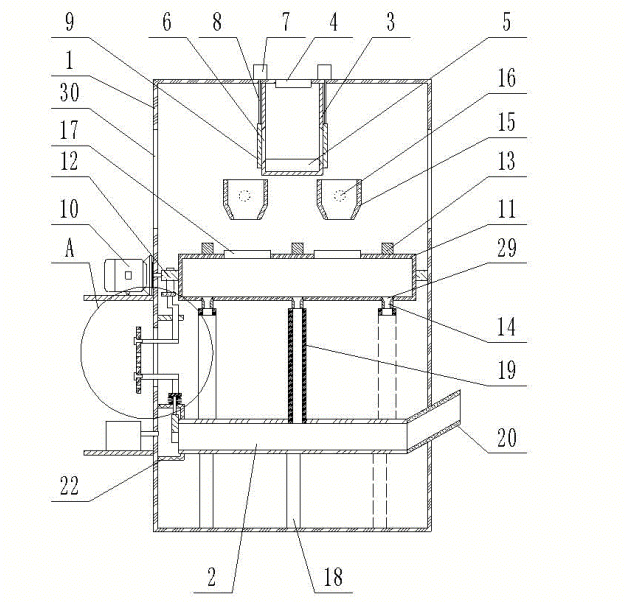

21: 2023/01948. 22: 2023/02/17. 43: 2023/05/09
51: B22F
71: Shenyang University of Technology, Fushun Dongyu Magnetic Material Co.
72: Zhijie LI, Xianyi XIU, Guimei SHI, Danna ZHAO, Lifu BAO, Hongwei ZHANG

54: AN APPARATUS AND METHOD FOR THE PREPARATION OF ALLOY NANOPARTICLES WITH TUNABLE PARAMETERS

00: -

The present invention discloses an apparatus and method for the preparation of alloy nanoparticles with adjustable parameters, where the upper part of the apparatus is a vapor phase deposition chamber, the vapor phase deposition chamber is connected to a sealing chamber, the outer wall of the vapor phase deposition chamber is provided with a heater, the vapor phase deposition chamber is connected to a water-cooled anode and a water-cooled ventilated cathode, and the lower part of the vapor phase deposition chamber is inserted into the trapping chamber through a conical trapping tank. The gas phase deposition chamber is connected to a molecular pump and a mechanical pump through a valve, and the mechanical pump, molecular pump and heater are connected to a power supply and a control cabinet. Alloy nanoparticles can be prepared continuously in large quantities; the arc shape can be controlled, the powder particle size distribution is narrow, and the content of generated alloy nanoparticles can be controlled; the structure of alloy nanoparticles is novel, and the operation is simple and effective; different elements can be prepared into alloy nanoparticles according to reason.

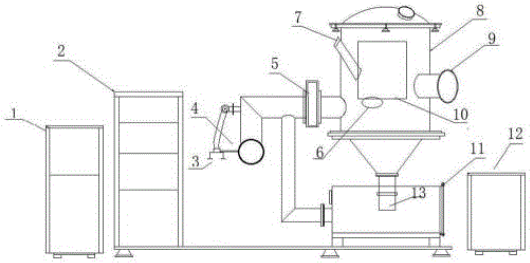

21: 2023/01949. 22: 2023/02/17. 43: 2023/05/09
51: C12N
71: Institute of Chinese Materia Medica, China Academy of Chinese Medical Sciences
72: WANG Yun, ZHANG Cun, GAO Ya, SONG Yanan

54: DIFFERENTIAL PROTEIN COMBINATION FOR ACUTE STROKE AND APPLICATION AND ANALYSIS METHOD THEREOF

00: -

The invention provides a differential protein combination for acute stroke, where the differential proteome 1 is a protein related to mitochondrial oxidative phosphorylation and ribosome pathway. When cerebral ischemia occurs, these proteins are first affected, and the occurrence of cerebral ischemia can be characterized by measuring the changes of their protein expression. Differential proteome 2 is related to complement system and HIF-1 signaling pathway, and differential proteome 3 is related to PPAR signaling pathway. When cerebral ischemia occurs, the complement system and HIF-1 signal pathway are activated, and a large number of active substances are produced, which increases the permeability of blood vessels and can characterize the characteristics of cerebral ischemia. When cerebral ischemia occurs, PPAR signaling pathway is also activated, which protects neurons in brain tissue. These three groups of differential protein combinations can be used as biomarkers for early detection of ischemic brain injury and cerebral ischemia, with high sensitivity and accuracy.

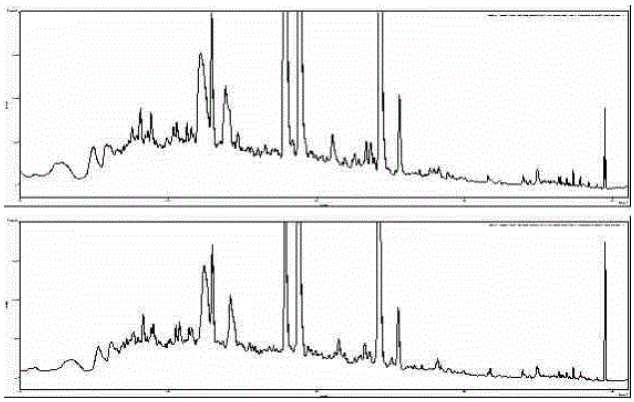

21: 2023/01950. 22: 2023/02/17. 43: 2023/05/09
51: C02F
71: Ningbo University of Finance & Economics, Ningbo Water Facilities Operation Management Center, Ningbo Irrigation Agricultural Technology Co., Ltd
72: Xu Jing, Zhang Yubin, Shen Jiani, Zhu Xinguo, Liu Tian, Feng Yimian
54: MOBILE MICRO NANO BUBBLES GENERATOR
00: -
The invention discloses a mobile micro nano bubbles generator, which comprises a bottom box, a pressure tank, a supporting frame, a universal wheel, a pushing rod, a water pump, an air inlet pipe, a water inlet pipe, a conveying pipe, a rotating motor, a rotating rod, a fan blade, a fine hole, a pressure gauge and a drain pipe. The invention has the beneficial effects that the connecting ends of the air inlet pipe, the water inlet pipe and the water drainage pipe are all provided with connecting threads, which are convenient for connecting with various externally connected pipes and improve the firmness of the connecting position; The bottom box pushes the pushing rod by external force to make the universal wheels at the bottom be in rolling connection with the bottom surface, which is convenient for users to operate and use; And the pipe bodies of the air inlet pipe and the water inlet pipe are both provided with filter screens, which can filter the gas and water entering the water pump, and prevent the use of the device from being affected by the inhalation of impurities with larger particles; And the fan blades are provided with a plurality of fine holes, and the fine holes are uniformly arranged on the fan blades, so that bubbles mixed in water can be broken and separated, thereby ensuring that a large number of micro nano bubbles can be generated.

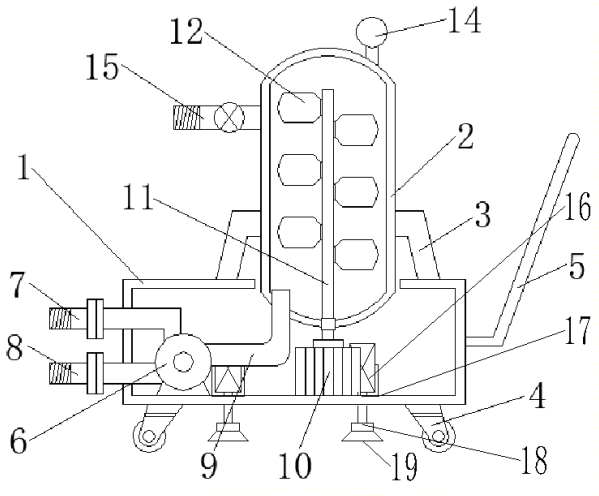

21: 2023/01951. 22: 2023/02/17. 43: 2023/05/09
51: C02F
71: Ningbo Water Facilities Operation Management Center, Ningbo University of Finance & Economics, Haishu District Water Conservancy Bureau
72: Zhu Xinguo, Liu Tian, Zhang Yubin, Wang Xupeng, Feng Yimian, Zhu Huomei
54: PHOTOCATALYSIS-BASED DRINKING WATER DISINFECTION DEVICE AND DISINFECTION PROCESS
00: -
The invention provides a photocatalysis-based drinking water disinfection device and the disinfection process, which relates to the field of air filters. The photocatalysis-based drinking water disinfection device and disinfection process comprise a box body, wherein a filtering cavity and a disinfection cavity are arranged in the box body; A filtering mechanism is arranged in the filtering cavity; The filtering mechanism comprises a stirring rod I and a pulling plate; The side surface of the stirring rod I is fixedly connected with a stirring blade I; And the inner side of the pulling plate is fixedly connected with a filter screen and an activated carbon screen; A disinfection mechanism is arranged inside the disinfection cavity. According to the invention, excessive impurities in the water can be intercepted through the filter screen and the activated carbon screen on the pull plate; And then the disinfected articles in the disinfection cavity of the box are mixed with the water, so as to eliminate toxic substances in

the water and realize the first disinfection; And finally, the water is disinfected for the second time through the ultraviolet lamps. The disinfection efficiency of the whole mechanism is higher through twice disinfection and impurity interception, thus improving the practicability of the device.

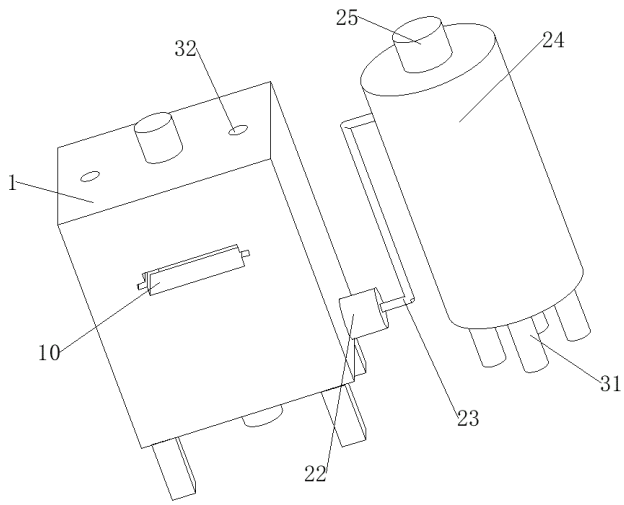

21: 2023/01952. 22: 2023/02/17. 43: 2023/05/09
51: E02F
71: China Railway Third Group No.2 Engineering Co., Ltd., China Railway Third Bureau Group Co., Ltd.
72: Ma Liang, Dong Jun, Zhang Ningjun, Liu Chenghong, Zhang Chao, Chen Yubo, Ma Linlin, Ding Hangying, Li Xuelei, Li Feng, Feng Jinxing
54: AN EARLY WARNING DEVICE FOR DIGGING GROOVE OF MILLING MACHINE
00: -
An early warning device for digging groove of milling machine, comprising a milling head, the milling head comprises a milling bur and a roller connected to one end of the milling bur, the other end of the milling bur is connected to the installation end of the excavator attachment, adjustment brackets are arranged on the external cylindrical surface of the milling bur, and the adjustment bracket is provided with a distance sensor, the distance sensor is used to detect the distance to the molding plate preset on the surface of the core soil, and sends the detected distance signal to the groove depth monitor, and the groove depth monitor takes an early warning action after receiving the distance signal. The invention can remind the operator when the milling machine is digging grooves to different groove depths, so as to avoid the phenomenon of over-excavation and under-excavation.

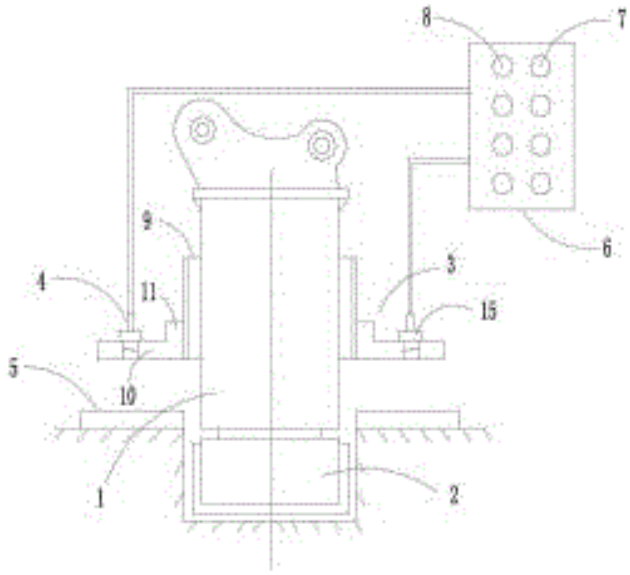

21: 2023/01953. 22: 2023/02/17. 43: 2023/05/09
51: G01B; G06T
71: Shenyang University of Technology
72: LIU, Huifang, JIANG, Shenhui, WANG, Wenguo, GAO, Yifei, LIU, Xiaojiang, CHANG, Yunlong
54: APPARATUS AND METHOD FOR DETECTING SHAPE PARAMETER OF ULTRAMICRO GLUE DROPLET BASED ON MACHINE VISION
00: -
The present invention provides an apparatus for detecting a shape parameter of an ultramicro glue droplet based on machine vision. The present invention can realize online detection of shape parameters of micro/nano, PL (10 -12 L)-FL (10 -15 L) ultramicro glue droplet and dynamic detection of a forming process of the glue droplet. Compared with other apparatuses for detecting shape parameters, the apparatus has good performance in real time, great precision, and high efficiency.

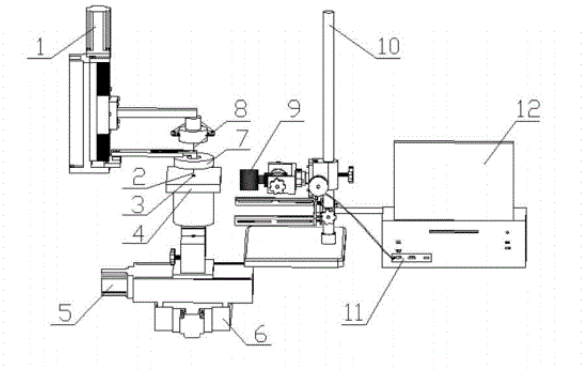

21: 2023/01954. 22: 2023/02/17. 43: 2023/05/09
51: H01G
71: GUILIN UNIVERSITY OF TECHNOLOGY
72: CAI, Gaotuo, LI, Ming, TANG, Tao, CHEN, Dinghan

54: ELECTRODE COMPOSITE MATERIAL OF FLEXIBLE SUPERCAPACITOR, AND PREPARATION METHOD THEREFOR

00: -

Provided are an electrode composite material of a flexible supercapacitor, and a preparation method therefor. For the electrode composite material, a one-step hydrothermal method is employed to achieve self-growth of molybdenum disulfide nanosheets, nitrogen-doped graphene quantum dots, and helical carbon nanotubes on a carbon cloth. The specific preparation method includes the following steps: S1, performing nitric acid pretreatment of a carbon cloth; S2, performing nitric acid modification of carbon nanotubes; and S3, preparing the electrode composite material: dissolving molybdate and a sulfur source in water, then adding nitrogen-doped graphene quantum dots and the helical carbon nanotubes, performing ultrasonic treatment for uniform mixing, then adding the carbon cloth pretreated by means of nitric acid, and performing a reaction at 180-220 degrees Celsius for 18-24 h to obtain the electrode composite material. The method is convenient to operate, high in efficiency, high in load rate, and cheap in raw materials.

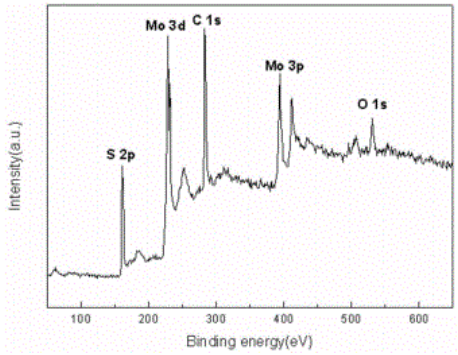

21: 2023/01955. 22: 2023/02/17. 43: 2023/05/09
51: C23C
71: GUILIN UNIVERSITY OF TECHNOLOGY
72: RU, Lu, XIAO, Jianrong, LIU, Jiajun, JIANG, Aihua

54: MICRO-NANO STRUCTURE LAYER AND METHOD FOR IMPROVING BONDING FORCE BETWEEN FLUORINATED DIAMOND-LIKE CARBON FILM AND STEEL SUBSTRATE

00: -

The present invention relates to the technical field of steel substrate film materials, and particularly relates to a micro-nano structure layer and a method for improving the bonding force between a fluorinated diamond-like carbon (FDLC) film and a steel substrate by utilizing the micro-nano structure layer. The micro-nano structure layer includes a steel modification layer, a steel-doped transition layer and a steel-doped FDLC film layer that are sequentially stacked on the surface of the steel substrate, where the steel-doped FDLC film layer contacts with the FDLC film. Each of the above three layers has a continuous steel structure, so that the steel is inserted into the whole micro-nano structure layer in a penetrating mode, and the above binding force is improved. Meanwhile, the steel-doped transition layer can prevent diffusion of carbon elements in the steel substrate and reduce an internal stress of the film.

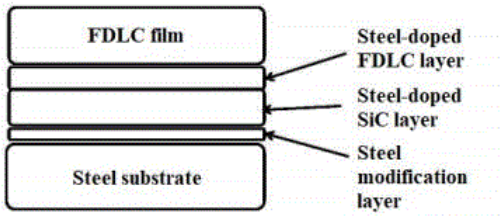

21: 2023/01956. 22: 2023/02/17. 43: 2023/05/09

51: B01J; C02F
71: GUILIN UNIVERSITY OF TECHNOLOGY
72: JIANG, Aihua, TAO, Simin, WANG, Yingru, XIAO, Jianrong
54: PHOTOCATALYTIC COMPOSITE FILM, AND PREPARATION METHOD AND APPLICATION THEREOF
00: -
The present invention relates to a photocatalytic composite film, and a preparation method and application thereof. The photocatalytic composite film includes molybdenum disulfide and copper nitride, where a mass ratio of the molybdenum disulfide to the copper nitride is (8-26):90. The photocatalytic composite film provided by the present invention has relatively high catalytic efficiency, and according to records of examples, the highest degradation rate can reach 99.9 percent after 30 min since photocatalytic degradation of methyl orange. The present invention further provides the preparation method for the photocatalytic composite film. The preparation method is simple to operate, good in repeatability, good in controllability, low in manufacturing cost, nontoxic in raw materials and high in utilization rate, performance of the film is convenient to control, and a production process is easy to achieve.

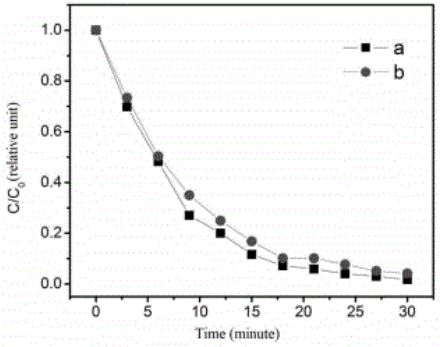

21: 2023/01957. 22: 2023/02/17. 43: 2023/05/09
51: C23C
71: GUILIN UNIVERSITY OF TECHNOLOGY
72: XIAO, Jianrong, ZHANG, Jianhui, JIANG, Aihua
54: POROUS CU-SIC COMPOSITE FILM AND PREPARATION METHOD THEREFOR
00: -
Provided are a porous Cu-SiC composite film and a preparation method therefor. The preparation method includes the following steps: S1, preparing a substrate; S2, mounting target positions; S3, preparing a Cu3N-SiC composite film; and S4, preparing a porous Cu-SiC composite film, and specifically placing the Cu3N-SiC composite film in an inert gas environment for annealing treatment to obtain the porous Cu-SiC composite film uniformly distributed. According to the present invention, a Cu3N thin film is decomposed into elemental copper and nitrogen, and double-target co-sputtering is performed, such that sputtering power of a copper target can be conveniently changed, a content of copper or SiC in the thin film can be effectively regulated and controlled, volume distribution, a particle size and metal components of the SiC in the composite film can be effectively regulated and controlled, and pore distribution of the Cu-SiC thin film is uniform.

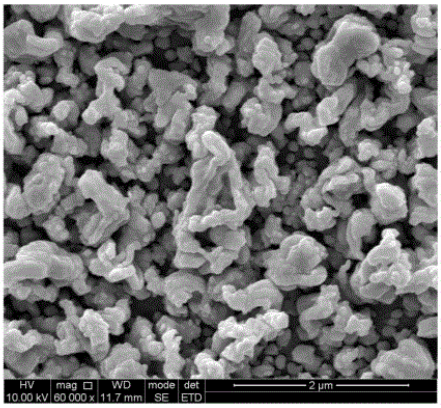

21: 2023/01958. 22: 2023/02/17. 43: 2023/05/09
51: B01J; C02F
71: GUILIN UNIVERSITY OF TECHNOLOGY
72: LI, Ming, XU, Ruizheng, TANG, Tao, CHEN, Dinghan
54: THREE-COMPONENT VISIBLE-LIGHT PHOTOCATALYTIC NANOCOMPOSITE AND PREPARATION METHOD THEREOF
00: -
Disclosed are a three-component visible-light photocatalytic nanocomposite and a preparation method thereof. The present invention belongs to the technical field of functional materials, including the following steps: S1, taking pyrene and nitric acid as raw materials for preparation of phosphorus-doped graphene quantum dots (P-GQDs), and preparing trinitropyrene; adding deionized water and a phosphorus source to the trinitropyrene, adjusting the pH value to 12, and performing hydrothermal reaction at 170 degrees Celsius to prepare P-GQDs; S2, preparing an aqueous solution of P-GQDs

prepared in S1, mixing it with titanium dioxide nanoparticles, silver nitrate and potassium iodide, filtering, and drying, to prepare the three-component visible-light photocatalytic nanocomposite. In a methyl orange solution, the prepared nanocomposite, under visible light irradiation, achieves a catalytic rate reaching up to 99.35 percent in 10 minutes, showing an excellent catalytic performance.

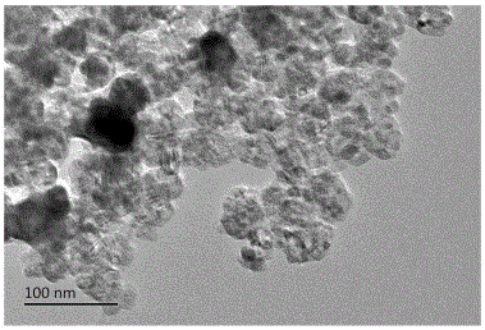

21: 2023/01960. 22: 2023/02/17. 43: 2023/05/09
51: G01N
71: Tianjin Chengjian University, China Railway Construction Group Co., LTD.
72: LIU Jinghong, LIU Zehao, LI Bingbing, ZHANG Yuxue, ZHANG Lingbo, LIU Yaoru, WANG Wenjie, JIAO Fengyu, WANG Taining

54: METHOD FOR MEASURING AND CALCULATING THE FRACTAL DIMENSION OF ROCK CONCRETE MATERIALS BASED ON ACOUSTIC EMISSION TIME SERIES

00: -

The invention provides a method for measuring and calculating the fractal dimension of rock concrete materials based on Acoustic Emission time series, which relates to the field of rock concrete failure precursor measurement. And the invention is used for calculating the fractal dimension of rock concrete materials, so as to judge the damage degree of rock concrete materials. Based on the Acoustic Emission experiments, the Acoustic Emission time series of rock concrete specimen is obtained, the fractal dimension calculation model of Acoustic Emission parameters is established by using fractal theory, and the fractal characteristics of Acoustic Emission experiment signals of rock and concrete under uniaxial compression are analyzed.

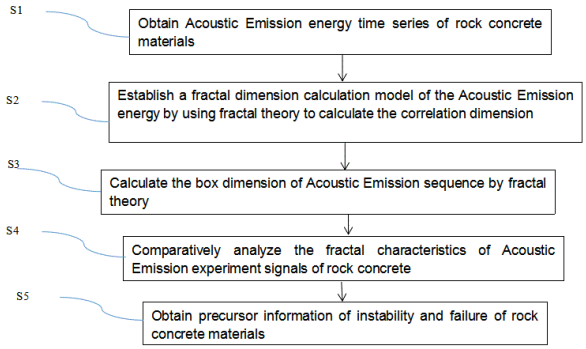

21: 2023/01961. 22: 2023/02/17. 43: 2023/05/09
51: E02D
71: China Railway Third Group No.2 Engineering Co., Ltd., China Railway Third Bureau Group Co., Ltd.
72: Zhang Yuanzheng, Xue Haiwei, Zhao Haibo, Liu Chenghong, Ma Liang, Chen Yubo, Wang Lei, Wang Yingmei, Ma Junsheng, Chang Huijun

54: SUPPORT DEVICE AND CONSTRUCTION METHOD FOR CAST-IN-PLACE PILES IN KARST CAVE AREAS

00: -

Disclosed are supporting device and construction method for cast-in-place piles in karst cave areas, including fixed piles, four sets of fixed piles are provided, all of which are in the shape of a quarter ring, and the ends of the fixed piles are respectively welded with insertion rods and insertion sets, the insertion rods and insertion sets are fixed by a locking mechanism, and the middle of the side wall of the fixed pile is welded with an ear block, and a steel pipe fixing plate is installed on the ear block through a cylindrical pin, and a second foot plate is movably installed on the steel pipe fixing plate, the top of the fixed pile is vertically welded with a fixed ring, the fixed ring is provided with a jack, and a positioning column is inserted in the jack, and a reinforcement device is installed on the positioning column. The fixed piles provided by the present invention is a ring plate used for splicing, and are spliced and fixed through a pull rod, a insertion cylinder and a locking mechanism, so that the diameter of the fixed pile can be changed, and it is convenient to adjust the radius of the fixed piles according to the diameter of the cast-in-place piles, so that the fixed piles can meet the construction requirements of the cast-in-place piles with different diameters.

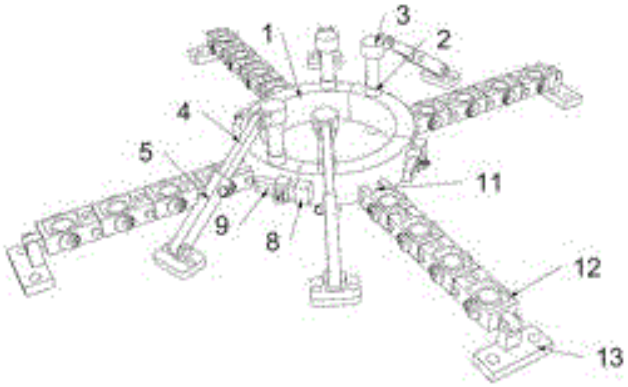

21: 2023/01962. 22: 2023/02/17. 43: 2023/05/09
51: A63B
71: Loudi Vocational and Technical College
72: ZHU, Qing
54: AUTONOMOUS CONTRAST TYPE REHABILITATION EXERCISE DEVICE FOR ELDERLY NURSING
00: -
The present invention provides an autonomous contrast type rehabilitation exercise device for elderly nursing, including a base, a treading mechanism and a lubricating mechanism, wherein the lubricating mechanism is communicated with the treading mechanism and driven to lubricate the treading mechanism in the working process of the treading mechanism. By using the device, the rehabilitation exercise of legs of the elderly is achieved and the training effect of legs is improved.

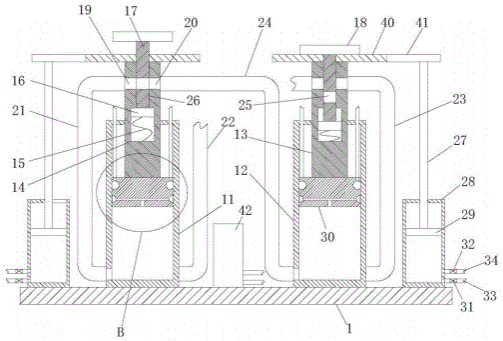

21: 2023/01963. 22: 2023/02/17. 43: 2023/05/09
51: A01N
71: Institute of Microbiology, Jiangxi Academy of Sciences (Jiangxi Institute of Watershed Ecology)
72: GUO Jianjun, WANG Tong, ZENG Jing, YUAN Lin
33: CN 31: 202211569315.9 32: 2022-12-08
54: LOW POLYLACTIC ACID, PREPARATION METHOD AND APPLICATION THEREOF
00: -
Disclosed is a low polylactic acid, a preparation method and application thereof, and relates to the technical field of plant growth regulation. The invention takes lactic acid as a monomer, tin lactate as a catalyst and ethoxylic acid as an initiator to generate the low polylactic acid through polymerization. The low polylactic acid may be used as a plant growth regulator to break the dormancy of seeds and improve the germination rate of seeds; promote the growth of plant roots and increase the root-shoot ratio; effectively accelerate the accumulation of dry matter and promote the growth and development of plant roots and leaves.

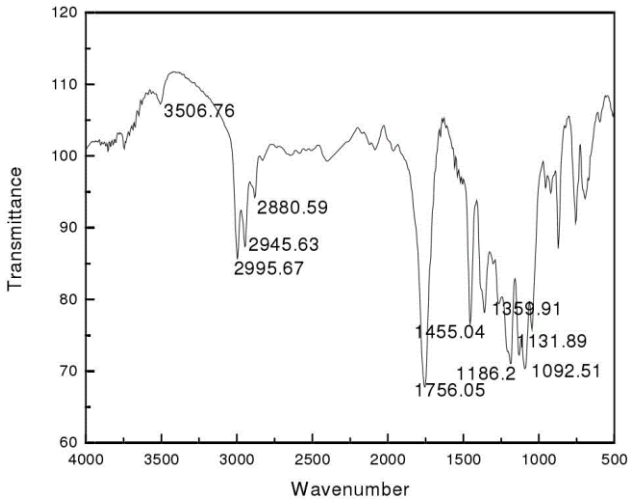

21: 2023/01964. 22: 2023/02/17. 43: 2023/05/09
51: A61B
71: Henan Provincial Hospital of Traditional Chinese Medicine (the Second Affiliated Hospital of Henan University of Traditional Chinese Medicine)
72: Wang Songhui, Lu Yan, Xue Shuina
54: WEARABLE BLOOD PRESSURE DETECTION BRACELET
00: -
The invention relates to a wearable blood pressure detection bracelet, which effectively solves the problems of inconvenient use, complicated operation and single function of the existing blood pressure detection bracelet; The technical solution includes: the blood pressure detection bracelet in this solution has an expander with the same function as the air bag in its watch strap. When performing blood pressure detection, it can be directly inflated and inflated by the micro air pump in the bracelet to complete the blood pressure detection process.

When the temperature is high in summer, the expander is in a concave state, which can directly form a channel for air circulation on the watch strap and wrist surface skin, In order to achieve the effect of timely and rapid outward drainage of sweat.

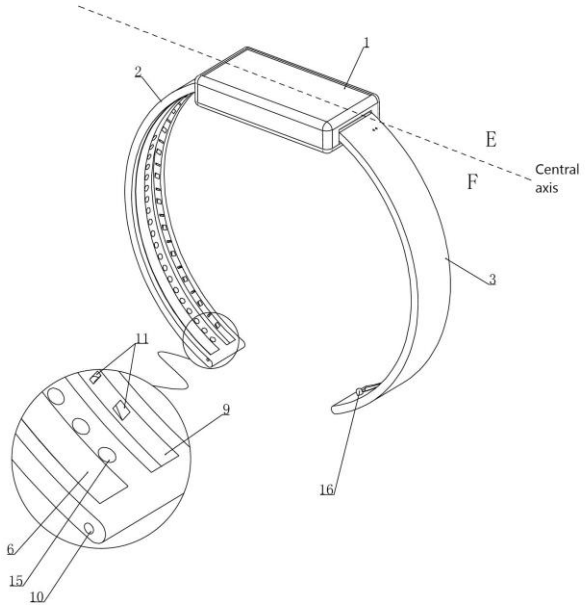

21: 2023/01965. 22: 2023/02/17. 43: 2023/05/09
51: G01D
71: Hainan University, Shijiazhuang Tiedao University
72: Peng XIE, Huchen DUAN, Zurun YUE, Haijia WEN, Shaokun MA, Bo CHEN, Runkun LIANG, Zhaoting LI, Lu JIANG, Yuantao WANG, Yuxuan YANG, Jing XIE, Bingyang LIU, Shaolong JIE, Jingjing FU, He QIU
54: A QUANTITATIVE METHOD OF BEARING CAPACITY OF LIMESTONE ROOF OF CONCEALED KARST CAVE
00: -
The invention discloses a quantitative method for the bearing capacity of limestone roof of concealed Karst cave. The method is as follows: Step 1: construct a spatial axisymmetric calculation model for the stability analysis of the limestone roof of concealed Karst cave; Step 2: Solve to obtain a complete solution that can reflect the spatial stress distribution characteristics of the concealed Karst cave limestone; Step 3: The mathematical expression for calculating the bearing capacity of limestone roof of concealed Karst cave is derived; Step 4. Complete the determination of roof bearing capacity. The invention adopts the above quantitative method of the bearing capacity of limestone roof of concealed Karst cave, which has the advantages of comprehensive consideration, high accuracy and reliability of the calculation results, and can provide a scientific basis for the prevention and control work of the ground collapse. The operation is simple and has the feasibility of practical project popularization.

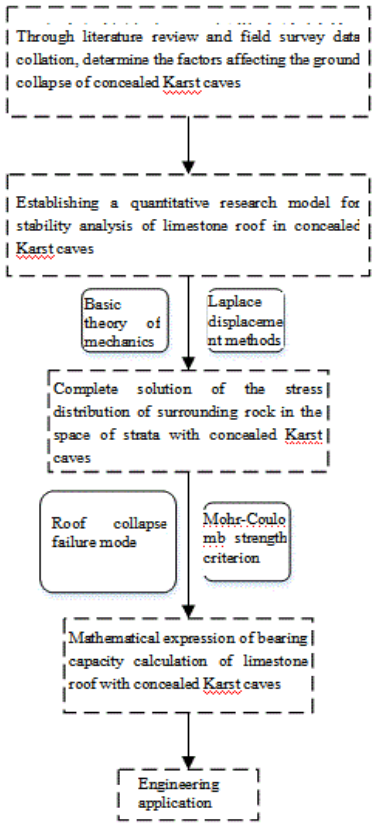

21: 2023/01966. 22: 2023/02/17. 43: 2023/05/09
51: A01J
71: Shandong Shengdafeier Biotechnology Development Co., Ltd.
72: Weifeng CHEN, Weifeng CHEN, Lulu CAO, Zhaoxiang HAO, Fupeng XUE, Juanjuan SUN
54: A CHEESE STRETCH-FORMING DEVICE OF CHEESE FORMING MACHINE
00: -
A cheese stretch-forming device of cheese forming machine, including a shell, a feeding inlet component, a feeding outlet component, the first stretching component, the second stretching component, the cooling component, and the cutting component; the first stretching component and the

second stretching component are arranged on the first stretching cabin and the second stretching cabin. The cooling component is set above the feeding outlet component along the feeding direction; the cutting component is set at the discharge part of the feeding outlet component; The first stretching component and the second stretching component are set in this invention, the cheese is extruded from multiple directions to achieve the purpose of stretching through the cooperation of the upper extrusion plate and the lower extrusion plate, the eccentric roller and the bulkhead of the second stretching cabin, so that the stretching is uniform, sufficient and effective; It also sets the feeding component to cooperate with the cooling component and the cutting component to complete the cooling and setting in the process of circulating feeding, which is simple in operation and good in setting effect.

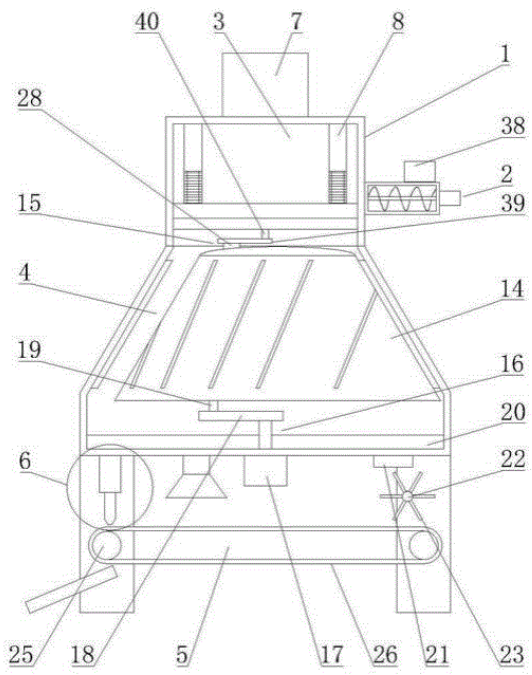

21: 2023/01967. 22: 2023/02/17. 43: 2023/05/09
51: A23C
71: Shandong Shengdafeier Food Co., Ltd.
72: Weifeng CHEN, Weifeng CHEN, Lulu CAO, Zhaoxiang HAO, Fupeng XUE, Juanjuan SUN
54: MELTING POT EQUIPMENT FOR CHEESE POWDER PROCESSING
00: -

Melting pot equipment for cheese powder processing, including a drying box, a cooling box, the first feed pipe, a heating pipe, the first heating element, a water pump, a connecting pipe, a stirring barrel, the second feed pipe, a stirring mechanism, an atomizing pump, the second heating elements, and a material box; The cooling box and stirring barrel are set on the drying box; the first heating element is set at the upper end of the cooling box; one end of the heating pipe runs through the first heating element and is located inside the cooling box. The first feed pipe is set at the other end of the heating pipe; the water pump is set in the cooling box, one end of the connecting pipe is set on the water pump, and the other end of the connecting pipe is set inside the stirring barrel. The second feed pipe is set on the stirring barrel. The atomizing pump is set at the bottom of the stirring barrel, and the output end of the atomizing pump is connected to the inside of the drying box. Several second heating elements are provided and set inside the drying box; the material box sliding is set at the bottom of the drying box, and the material box is in a detachable connection with the drying box. The invention performs pasteurization through the first heating element and stirs the raw materials through the stirring mechanism to improve the quality of the finished product.

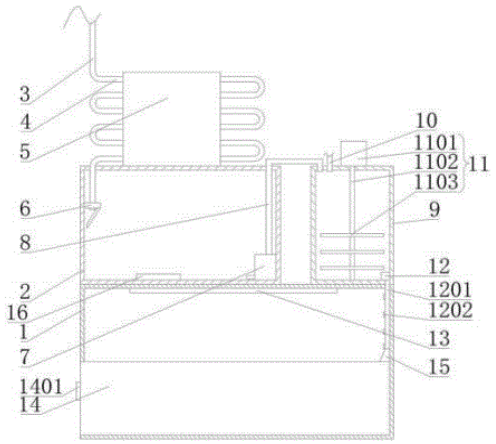

21: 2023/01968. 22: 2023/02/17. 43: 2023/05/09
51: A61J
71: Henan Provincial Hospital of Traditional Chinese Medicine (the Second Affiliated Hospital of Henan University of Traditional Chinese Medicine)
72: Wang Yuping, Huang Mingqi

54: AN ORAL DRUG FEEDER FOR CANCER PATIENTS

00: -

The invention relates to a tumor patient soup medicine feeder; The technical solution includes a medicine storage chamber, the lower end of which is connected with a medicine feeding hose, the upper end of which is coaxial with a cylinder, the medicine storage chamber is equipped with a first piston, and the cylinder is equipped with a second piston. The first piston and the second piston are fixed as a whole through the connecting rod, the part of the connecting rod placed in the cylinder is covered with a spring, and the upper end of the second piston is fixed with a pull rod whose upper end extends out of the cylinder, The second piston and the upper half of the cylinder form a closed chamber, the closed chamber is connected with a one-way valve, the closed chamber is also connected with an air inlet pipe, and the air inlet pipe is equipped with a press-type air inlet valve; The invention stores energy by means of spring force storage, and the patient can automatically control the dosage of the liquid medicine through the patient's self-held press-type air inlet valve. In the process of self-feeding, the patient's self-control can effectively prevent the liquid medicine from choking.

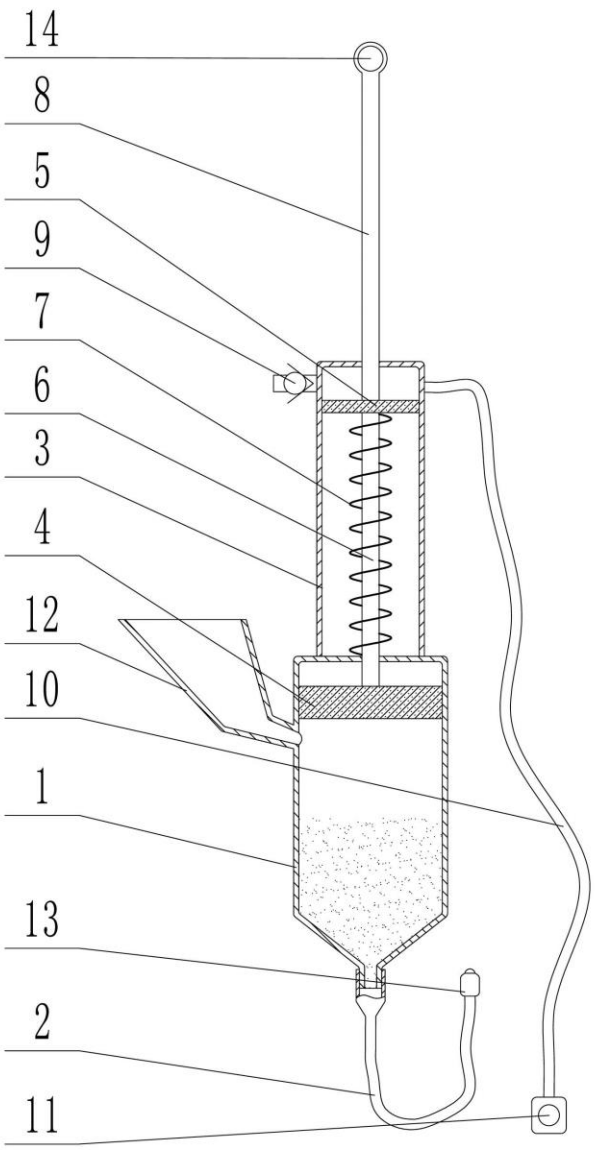

21: 2023/01971. 22: 2023/02/17. 43: 2023/05/09
51: B01D
71: Nanchang Institute of Technology
72: Lichao Zhang, Song Guo, Hongguang Liu, Jinwen Xia, Peilin Ge, Yi Ouyang, Yingchun Liao, Fangfang Shen, Minghao Mo, Yuejun Song, Hongmei Zhang, Yanyan Li, Kongzhong Xiao

54: A SOIL AND WATER CONSERVATION SAND SETTLING TANK FOR SMALL WATERSHED TREATMENT

00: -

The invention discloses a water and soil conservation sand settling tank for small watershed control, belonging to the technical field of water and soil conservation, including a sand settling tank, wherein a fine sand filter net is installed inside the

sand settling tank, a dredging component is arranged on one side of the fine sand filter net, and a sand discharging component is arranged on the surface of the sand settling tank. The motor drive screw rotation can make the push plate move in the upper limit of the screw, driven by the fixed rod synchronous movement of the side plate can make the sediment tank side notch open, push plate can be deposited sediment from the side notch, easy to take out the sand so as to make the sand removal operation more convenient; By setting the dredging component and pulling the control lever to drive the brush plate to move, the brush plate can dredge the blocked mesh of the fine sand filter, so that the fine sand filter can be stable and the filtering effect is better. Under the elastic force of the spring, the brush plate can be close to the surface of the fine sand filter, so that the cleaning and dredging effect is better.

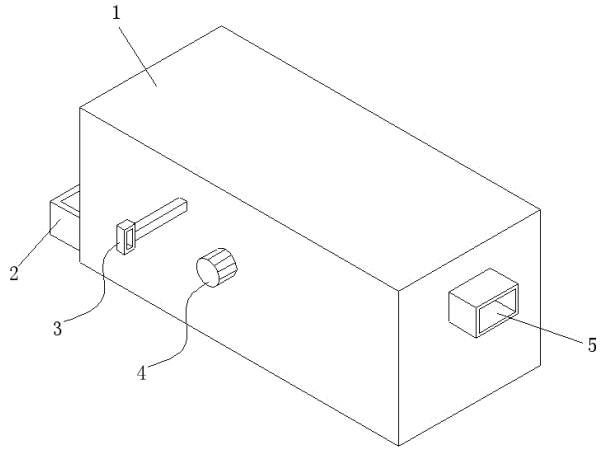

21: 2023/01972. 22: 2023/02/17. 43: 2023/05/09
51: G01N
71: Nanchang Institute of Technology
72: Lichao Zhang, Haina Zhang, Xianghui Lu, Mei Li, Yuyin Guo, Yucheng Ye, Ji Feng, Peilin Ge, Hong Cheng, Liying Xiao, Jinwen Xia, Zhiping Deng

54: A SOIL SAMPLE SAMPLER FOR RIVER, LAKE AND RESERVOIR WATERFRONT ZONE

00: -
The invention discloses a soil sample sampler for river, lake, reservoir and waterfront belt, belonging to the technical field of soil sampling. It comprises a sampling cylinder, the sampling cylinder is embedded inside the sampling tube, the sampling tube is provided with an internal groove. A sampling component is embedded in the inner slot, and a sampling component is connected to the top of the sampling tube. By setting the sampling component, the motor drives the bevel gear to rotate two times so that the screw drives the sampling tube to move down the limit and insert it into the soil to be collected, and then the motor drives the sampling tube to move up and pull out, and the sample soil will be taken out together in the inner slot of the sampling tube to complete the sampling. Electric control drive can make sampling operation more labor-saving and simple; By setting a sampling component, the control block is controlled to slide inside the sliding groove, and the control block drives the sliding block to move synchronously to push the pusher plate under the connection of the connecting rod. The pusher plate sliding downward inside the inner slot can push out the sample soil, which is convenient for sampling and thus makes the device have better use effect.

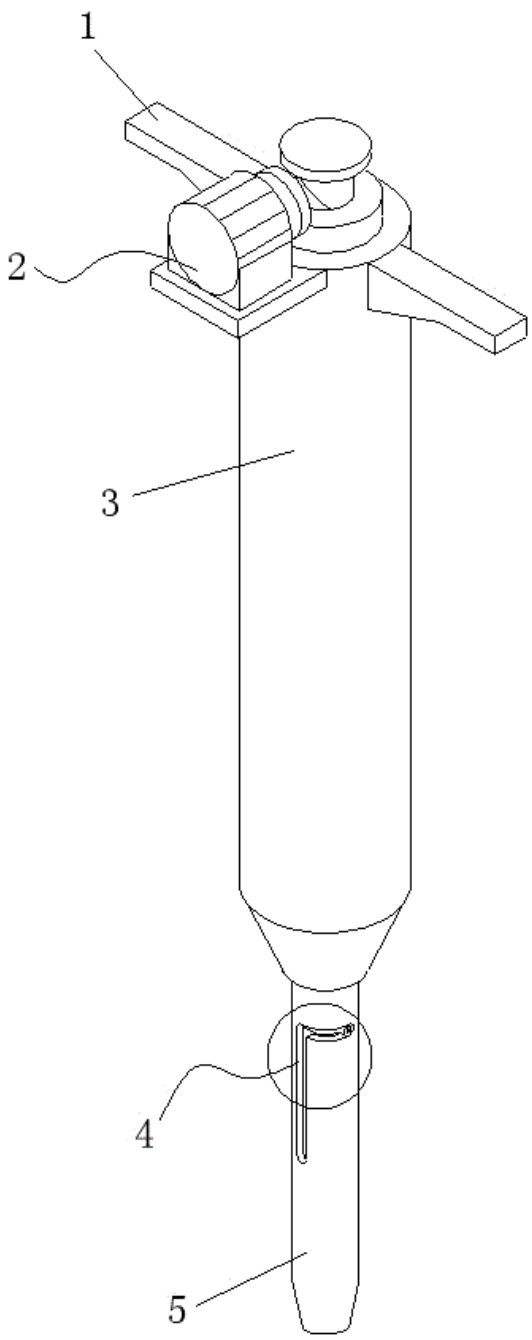

21: 2023/01974. 22: 2023/02/17. 43: 2023/05/09
51: A24B
71: China Tobacco Henan Industrial Co., Ltd.
72: Feng Bai, Weidong Duan, Xinling Yang, Guangting Yin, Hongtao Shen, Xiaohui Miao, Zhuangzhuang Wei
33: CN 31: 202310019399.7 32: 2023-01-06
54: A PREPARATION METHOD OF CIGAR-FLAVORED CHEWING TOBACCO
00: -

The invention belongs to the technical field of chewing tobacco preparation, in particular relates to a preparation method of cigar flavored chewing tobacco, including the following steps: Step 1: Adding hydrated lime to glycerin at constant temperature for 20-30min to obtain a solution, then adding butter, sweetener and flavoring agent, and stirring at temperature for 1-2h to obtain a mixture; Step 2: Add cigar flavor and tobacco extract into the mixture, stir at constant temperature for 1-2h, and then add hydroxypropyl- β -cyclodextrin for 1-2h microwave reaction to get the pretreatment mixture; Step 3: Xanthan gum and caramel were added into the pre-treated mixture and stirred at constant temperature for 20-30min to obtain prefabricated chewing tobacco. Step 4: Soften the rubber matrix at constant temperature, and then add the prefabricated chewing tobacco. After forming, aging, coating and polishing, chewing tobacco is obtained. The invention solves the gap of the existing chewing tobacco, and uses the cigar flavor combined with hydroxypropyl-β-cyclodextrin to achieve stable and slow release effect, which not only provides the cigar chewing tobacco with mellow taste, but also improves the sustained taste of chewing tobacco with a slow release structure.

21: 2023/01978. 22: 2023/02/17. 43: 2023/05/09
51: A61F
71: Inner Mongolia Medical University
72: Hongdan Fu, Daihe Li
54: A 3D-PRINTED ORTHOPEDIC SUPPORT DEVICE FOR CHILDREN'S LOWER EXTREMITY TORSION DEFORMITY
00: -

The invention relates to the technical field of orthopedic support, in particular to a 3D-printed orthopedic support for children's lower limb torsion deformity. The first leg fixing component is set as the first fixing support on the outside and the first fixing ring on the inside. Through the coordination of the first rack and the first gear, the first fixing ring can be rotated internally or externally relative to the first fixing bracket to correct the internal and external rotation deformity of the tibia. The second leg fixing component has the same principle; In addition, the first leg fixing component and the second leg fixing component can rotate freely with respect to the adjusting device. This can ensure the normal walking of children, the adjustment device through the third rack and the third gear can adjust the distance between the first leg fixing component and the second leg fixing component according to the

specific situation of children. The precision and personalized customization of different children through 3D-printed technology can make the equipment more comfortable to wear, so as to achieve the best orthopedic effect.

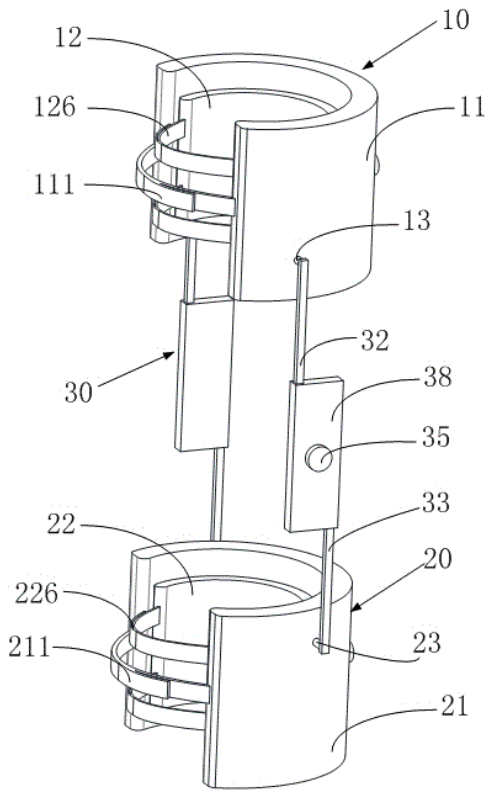

21: 2023/01979. 22: 2023/02/17. 43: 2023/05/09
51: H04N
71: Zhengzhou University of Aeronautics
72: LIAO, Xin, WANG, Lele, DONG, Sheng
33: CN 31: 202210977125.4 32: 2022-08-15
54: IMAGE RECOGNITION DEVICE BASED ON DIGITAL TWIN TECHNOLOGY
00: -
The present invention relates to the technical field of intelligent recognition, and discloses an image recognition device based on digital twin technology, which includes a recognition table and an image recognition device body. The recognition table is provided with a passing groove at the top. A fill light located in an inner cavity of the passing groove is fixedly mounted on an inner wall of the recognition table. A back side of the recognition table is provided with a position fine-tuning mechanism. A support plate is fixedly mounted on a front side of the recognition table. The circulation pump is controlled to work to pump cooling water from the inside of the water storage tank, so that the cooling water floods into an inner cavity of the hollow tube through the extending connecting pipe, and then flows through an inner cavity of the triangular heat exchange tube. During the flowing process, air in an inner cavity of the accommodating box will be heat-exchanged and cooled through the entirety of the heat-exchange triangular tube. At the same time, the internal circulation fan is controlled to work to drive the air in the inner cavity of the accommodating box to perform internal circulation, that is, to achieve the function of water cooling protection for the image recognition device body and prolong the service life of the image recognition device body.

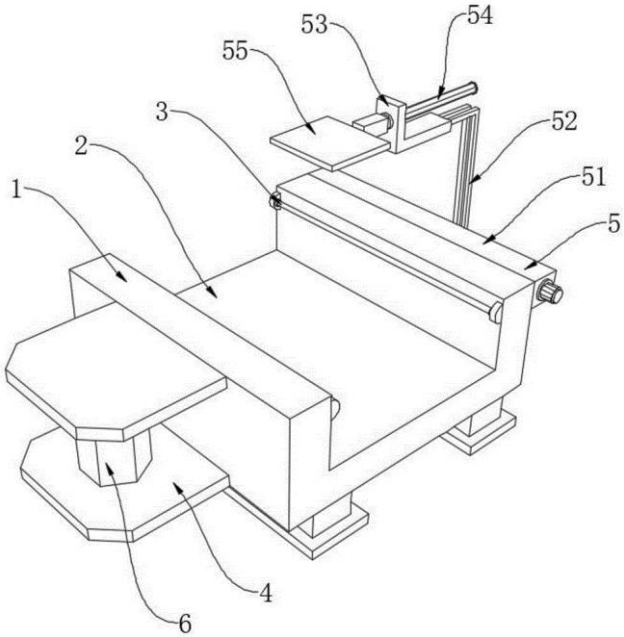

21: 2023/01981. 22: 2023/02/17. 43: 2023/05/12
51: A61L
71: Dr. Nayan Ashok Gujarathi, Dr. Bhushan Rajendra Rane, Dr. Raj Kumar Keservani, Dr. Rajeshwar Kamalkant Arya, Sheetal Baban Gosavi, Dr. Prashant Kumar, Dr. Deepak Sharma, Dr. Dheeraj Chitara, Dr. Amit Kishor Srivastava, Sweta Rai, Dr. Manish Jaimini, Dr. Farhad F Mehta
72: Dr. Nayan Ashok Gujarathi, Dr. Bhushan Rajendra Rane, Dr. Raj Kumar Keservani, Dr. Rajeshwar Kamalkant Arya, Sheetal Baban Gosavi, Dr. Prashant Kumar, Dr. Deepak Sharma, Dr. Dheeraj Chitara, Dr. Amit Kishor Srivastava, Sweta Rai, Dr. Manish Jaimini, Dr. Farhad F Mehta
54: PH-SENSITIVE POLYELECTROLYTE COMPLEX COMPOSITION FOR SUSTAINED

DELIVERY OF ACID-SUSCEPTIBLE DRUGS AND ITS PREPARATION METHOD THEREOF

00: -

The process for preparing pH sensitive polyelectrolyte complex for sustained delivery of acid susceptible drugs comprises preparing 2-5 wt% of aqueous Carbopol solution by dissolving the O-CMC powder in deionized water and stirring for 6 h at room temperature; mixing the 2-5 wt% of O-CMC solution homogenously with equal volumes of an aqueous Carbopol solution; fabricating the cross-linked polyelectrolyte beads by dropping the interpolymer solution into 2-5 wt% of gently stirred calcium chloride solution, which is accomplished through a syringe needle, at a dropping rate of 1.0 ml/min; allowing the prepared beads to harden in CaCl2 solution for 1 h; filtering, and washing the prepared beads with distilled water several times for removing unreacted CaCl2, and thereby drying at 37 ◦C for 24 h; and weighing rabeprazole sodium and adding to an initial aqueous O-CMC solution with continuous stirring thereby treating for preparing rabeprazole loaded O-CMC–carbopol beads.

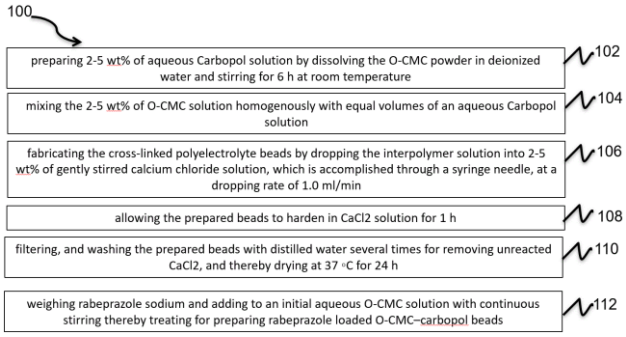

21: 2023/02007. 22: 2023/02/20. 43: 2023/04/26
51: A01G; C05G
71: Soybean Research Institute of Heilongjiang Academy of Agricultural Sciences
72: REN, Honglei, ZHANG, Fengyi, WANG, Jiajun, ZHANG, Bixian, LI, Jinrong, ZHEN, Shanji, LIU, Xiulin, WANG, Xueyang, ZHAO, Kezhen, SUN, Mingming, LI, Zhiyuan, ZHU, Xiao, ZHANG, Xin, HE, Wenjin

54: METHOD FOR PLANTING SOYBEAN IN SALINE-ALKALI SOIL

00: -

The present invention provides a method for improving adaptability of a soybean to saline-alkali soil. The method includes: before sowing, soaking a seed in a rare earth lanthanum-salicylic acid mixture; and spraying brassinolide on leaves and a stem of the soybean at a stage of ternately compound leaves of the soybean. In the present invention, by jointly soaking seeds in rare earth lanthanum and salicylic acid, the germination capacity of the soybean seeds in the saline-alkali soil is improved, and a germination rate, germination potential and a germination index are improved; by spraying the brassinolide, a saline-alkali resistance of the soybean is improved, activities of superoxide dismutase (SOD), peroxidases (POD) and catalases (CAT) are increased, and the content of malondialdehyde (MDA) in soybean seedlings is decreased; and a yield and quality of the soybean planted in a saline-alkali environment is guaranteed.

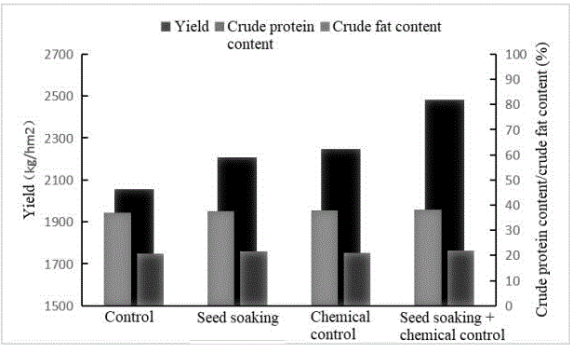

21: 2023/02008. 22: 2023/02/20. 43: 2023/04/26
51: B08B
71: Shanxi Lu'an Photovoltaics Technology Co., Ltd.
72: YANG, Feifei, LIU, Donglin, ZHANG, Bo, LI, Xuefang, ZHANG, Yunpeng, LV, Tao, QIU, Erbo

54: POST CLEANING METHOD FOR N-TYPE CRYSTALLINE SILICON PASSIVATED CONTACT CELL

00: -

The present invention relates to the field of solar cell texturing. A post cleaning method for N-type crystalline silicon passivated contact cell. The post cleaning method includes two cleaning steps with alkaline corrosive liquid before single crystal texturing of the first cleaning step with the alkaline corrosive liquid, and the rapid cleaning with high-concentration alkaline solution; a second cleaning step with the alkaline corrosive liquid, and slow cleaning with a mixed solution of a medium-concentration alkaline solution and hydrogen peroxide. According to the present invention, the two-step alkaline cleaning step is used after pre-cleaning, such that oil stains on a cell can be effectively removed; after texturing is completed, the

oil stains can be thoroughly cleaned by alkaline cleaning and acid cleaning anew, which effectively reduces a proportion of EL black spots in a subsequent production line.

21: 2023/02009. 22: 2023/02/20. 43: 2023/04/26
51: H01L
71: Shanxi Lu'an Photovoltaics Technology Co., Ltd.
72: ZHANG, Bo, ZHAO, Caixia, ZHAO, Junlong, YANG, Feifei, LIANG, Ling, YANG, Xubiao, QIU, Erbo
54: FRONT SURFACE PASSIVATION PROCESS MATCHED WITH ALKALINE POLISHING SELECTIVE EMITTER
00: -
The present invention relates to the field of single crystal PERC back etching and alkaline polishing processes. A front surface passivation process matched with an alkaline polishing selective emitter. In an oxidation process before an alkaline polishing process, depositing an oxide layer with high-temperature hot oxygen and a slow cooling rate are combined, that is, process conditions of depositing the oxide layer are as follows: deposition temperature is 790-810 degrees Celsius, pressure is 100-120 mbar, an oxygen flow rate is 3000-3500 sccm, time is 25-35 min, a cooling process is divided into three steps, and then unloading a boat out of a tube uses an existing process; and in a coating process of the alkaline polishing process, a silicon-rich film layer is added separately, that is, the first silicon-rich film layer is deposited with PECVD.

21: 2023/02010. 22: 2023/02/20. 43: 2023/04/26
51: H01L
71: Shanxi Lu'an Photovoltaics Technology Co., Ltd.
72: ZHANG, Bo, ZHAO, Caixia, ZHAO, Junlong, YANG, Feifei, LIU, Donglin, LV, Tao, YANG, Ting
54: NEW BACK ETCHING METHOD FOR CRYSTALLINE SILICON CELL
00: -
Provided is a new back-side etching method for a crystalline silicon cell, including the steps: back-side removal of the PSG, specifically, removing the PSG formed after the back-side diffusion of a silicon wafer by using a hydrofluoric acid aqueous solution under the condition that the front side of the silicon wafer is protected by a water film;; performing the back-surface alkaline polishing, throughout which the weight loss of the silicon wafer is controlled within 0.2 ± 0.01 g, and the alkaline polishing process includes pre-cleaning, alkaline polishing, alkaline cleaning and acid cleaning, where the pre-cleaning uses a potassium hydroxide and hydrogen peroxide solution for cleaning, the alkaline polishing uses a chemical auxiliary agents for polishing, the alkaline cleaning uses a mixed solution of potassium hydroxide and hydrogen peroxide solution for cleaning, and the acid cleaning uses a mixed solution of hydrofluoric acid and hydrochloric acid for cleaning.

21: 2023/02011. 22: 2023/02/20. 43: 2023/04/26
51: H01H
71: Shanxi Lu'an Photovoltaics Technology Co., Ltd.
72: YANG, Feifei, LIU, Donglin, ZHANG, Bo, ZHAO, Kewei, ZHAO, Junlong, YANG, Ting, SHEN, Kaiyu
54: NEW BACK PASSIVATION PROCESS FOR BIFACIAL CRYSTALLINE SILICON CELL
00: -
Provided is a new back passivation process for a bifacial crystalline silicon cell, first directly preparing a silicon oxynitride layer on the back-surface crystalline silicon substrate, followed by annealing, and finally preparing a silicon nitride layer, where the silicon oxynitride layer is a single-layer film and deposited through PECVD, with parameters being: a pressure of 1,500 - 2,000 mTorr, a temperature at 450 – 500 degrees Celsius, a power of 8,500 - 12,000 W, a pulse switching ratio of 1:10 - 1:16, the introduced SiH4/NH3/N2O = 1.65/1/4 - 2.5/1/5, the total flow of the three gases SiH4, NH3 and N2O being greater than 7,000 sccm, and the time of 40 - 60s. The present invention not only effectively reduces the manufacturing cost of the back passivation of bifacial cells, but also creatively solves the problem that the passivation effect turns worse after the passivation SiON film layer becomes thinner.

21: 2023/02012. 22: 2023/02/20. 43: 2023/04/26
51: G06Q
71: BAICHENG NORMAL UNIVERSITY
72: ZHANG, Xihua
54: UNIVERSITY TALENT CULTIVATION METHOD BASED ON EXTENSION DATA MINING
00: -
The present invention provides a university talent cultivation method and establishes extension rules

for employment-talent cultivation based on extension data mining to identify problems related to enterprise recruitment, graduate employment and talent cultivation. According to different input weights of colleges and universities, an employment-talent cultivation model is established by using extension reasoning and extension transformation, so as to obtain dependent relationships among colleges and universities in talent cultivation, and provide colleges and universities with strategies capable of solving the problems of recruitment, employment and talent cultivation.

21: 2023/02013. 22: 2023/02/20. 43: 2023/04/26
51: C08J
71: Guangdong Ocean University, MA Xingbin, LIU Zijie
72: MA Xingbin, LIU Zijie, JU Xianghong, YONG Yanhong, LI Youquan
54: ALKALOID MOLECULARLY IMPRINTED POLYMER AND ITS PREPARATION METHOD AND APPLICATION
00: -
The invention discloses a “Class specificity” molecularly imprinted polymer and its preparation method and application, which uses highly active 4-hydroxy-2 (3H) benzoxazolinone and 2-benzoxazolinone as double templates, aminoated titanium dioxide nanoparticles as scaffolds, methacrylic acid as functional monomer, ethylene glycol dimethacrylate as a cross-linking agent and acetonitrile as pore-forming agent. Benzoxazolinone alkaloid molecularly imprinted polymers (MIPs) were synthesized by precipitation method. The invention discloses benzoxazolinone-type alkaloid molecularly imprinted polymer. It has good adsorption performance and selectivity. As a solid phase material, it is applied to the separation and purification of solid phase extraction, which has a rapid, simple, and efficient beneficial effect. It has good application for the determination, separation, and extraction of benzoxazolinone alkaloids in Acanthus ebracteatus Vahl.

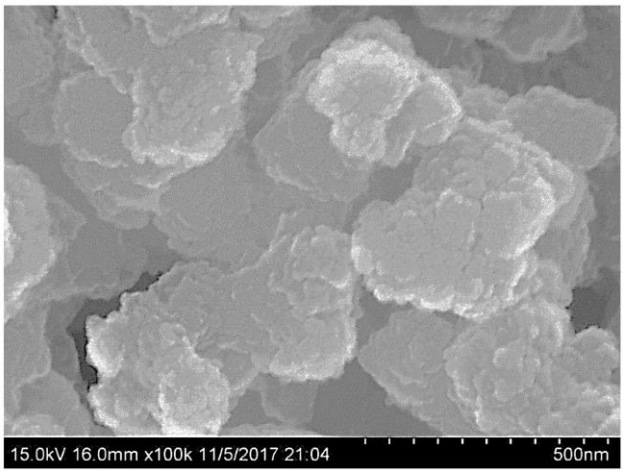

21: 2023/02014. 22: 2023/02/20. 43: 2023/04/26
51: A47B
71: Zhengzhou University of Aeronautics
72: CHEN Yanqiu, KONG Lingfu, ZHANG Runjia, YANG Wenjing, ZHANG Yumin, ZHANG Guizhou, MU Yanyan
54: MULTIFUNCTIONAL TEACHING DESK FOR MENTAL HEALTH EDUCATION
00: -
The invention discloses a multifunctional teaching desk for mental health education, which relates to the technical field of teaching tables. The invention comprises a teaching desk body, wherein the top end of the teaching desk body is fixedly connected with an operation box, the front surface of the operation box is provided with two installation holes for installing operation gloves, and a mental education sand table is arranged in the operation box, and the bottom end of the mental education sand table collides with the top end of the silica gel anti-skid pad. The invention can be operated and used by the user through the operation gloves through the operation box, so that the service life of the mental education sand table is prolonged; the sand scattered during use is collected through the sand collecting groove, the connecting belt and the elastic fixing belt; and meanwhile, the mental education sand table is heated through the mutual cooperation of the guide fan and the electric heating tube, so that the internal sand is prevented from being wet.

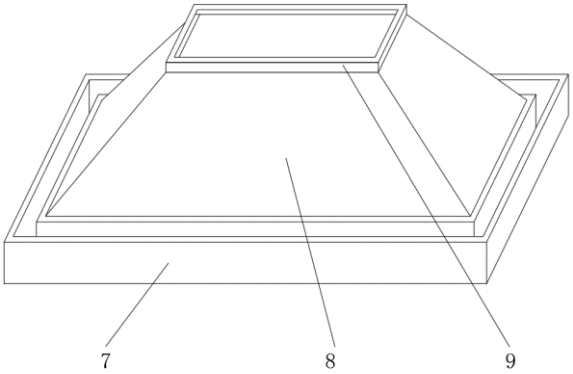

21: 2023/02015. 22: 2023/02/20. 43: 2023/04/26
51: A61K
71: Peking Union Medical College Hospital, Beijing Chest Hospital, Capital Medical University
72: HU Jin, ZHANG Xuan, SHI Jianquan
54: SUSTAINED-RELEASE PREPARATION FOR TREATING SYSTEMIC LUPUS ERYTHEMATOSUS
00: -
Disclosed is a medicine for treating systemic lupus erythematosus, including a nano sustained-release carrier, a therapeutically effective amount of active medicines, wherein the nano sustained-release carrier is poly (3-hydroxybutyric acid-3-hydroxyvaleric acid-3-hydroxyhexanoic acid trimer), the active medicines are mycophenolic acid and its derivatives. In the invention, MPA is successfully loaded on the PHBVHHx nano-carrier, and compared with the original medicine MPA and the control MPA-PLA nano-particles, the MPA-PHA nano-particles are not easy to be excreted by the kidney, and may be effectively accumulated in the spleen. During the in vivo experiments of SLE mice, MPA-PHA nanoparticles significantly reduce the concentrations of urine protein, IgG, anti-dsDNA and ANA in SLE mice, and have relatively little histological or hematological toxicity.

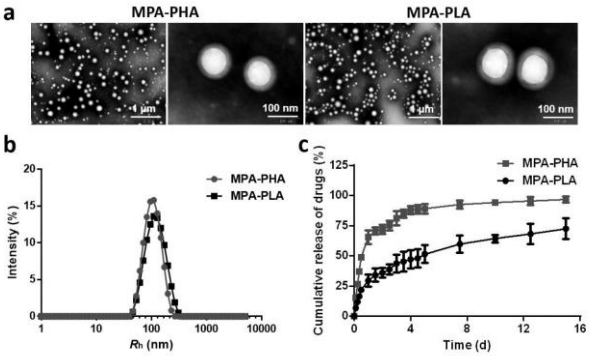

21: 2023/02016. 22: 2023/02/20. 43: 2023/04/26
51: C08F; C09K
71: SINOPETROLEUM TECHNOLOGY INC
72: ZHAO Baoshun, LI Yongkang, WANG Xiaofen, YIN Shuanshuan, HE Kuan, XIE Hongshun
54: DOUBLE-BASE NANO VISCOSITY REDUCER FOR HEAVY OIL AND EXPLOITATION METHOD THEREOF
00: -
Disclosed are a double-base nano viscosity reducer for heavy oil and an exploitation method thereof, and relate to the technical field of viscosity reduction of heavy oil. The double-base nano viscosity reducer includes an organic-inorganic emulsion, amphiphilic nanosheets, an accelerator and water, wherein the organic-inorganic emulsion is prepared from a polymer surfactant, an alkane organic solvent, water and a first emulsifier, and the amphiphilic nanosheets are associated with the polymer surfactant; the double-base nano viscosity reducer system for heavy oil continuously carries the polymer surfactant into heavy oil through the strong permeability of the amphiphilic nanosheets, enhancing the internal dispersion of heavy oil to break up the internal structure of heavy oil, thus achieving the objective of viscosity reduction from the inside out.

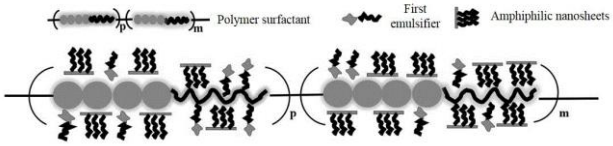

21: 2023/02017. 22: 2023/02/20. 43: 2023/04/26
51: G09B
71: Tonghua Normal University
72: Yan Ren, Shuaichen Jin, Yanyan Zhang, Qingling Zhang, Xiaowei Jin, Sheng Ren

54: A PORTABLE ENGLISH TEACHING BOARD
00: -
The present invention discloses a portable English teaching board, which belongs to the field of teaching aids technology. ta comprises a backplate, the interior of the backplate is provided with a drive mechanism, one end of the drive mechanism is provided with a base, and the inside of the base is provided with an adsorption component; The present invention is provided with an adsorption component, when the base is in contact with the ground and the drawing board reaches a suitable height, stop the operation of the driving mechanism, and then turn the cover plate, the cover plate rotates to drive the thread cylinder to rotate out of the threaded hole, and then take out the extraction cylinder from the inside of the placement groove, and then open the sealing cover, and connect the extraction cylinder with the extraction pipe. The vacuum suction cup is vacuumed by the use of the pumping cylinder and the suction tube, so that the vacuum suction cup is adsorbed to the ground of the place of use, and under the adsorption action of the vacuum suction cup, the stability of the connection between the base and the ground of the place of use can be improved, and the stability of the whole device can be improved.

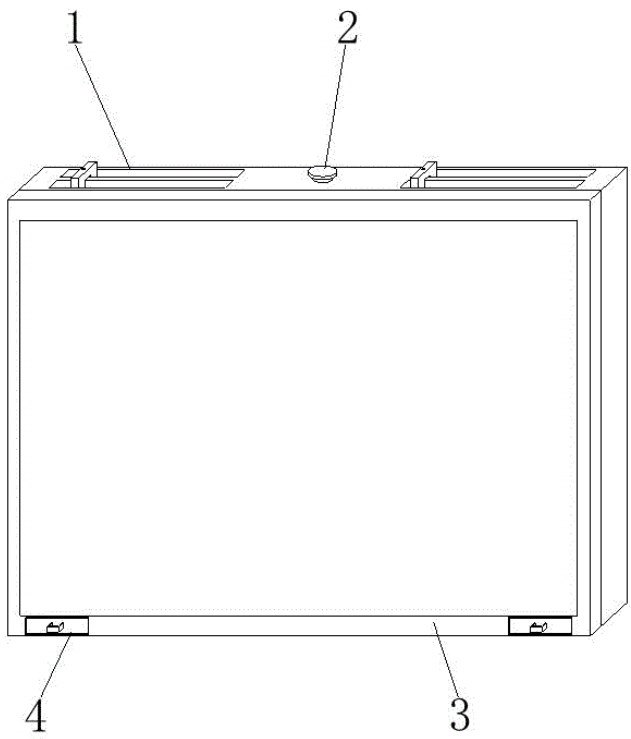

21: 2023/02018. 22: 2023/02/20. 43: 2023/04/26
51: A61K; A61P
71: Hongsheng Yang
72: Hongsheng Yang
54: A PRESCRIPTION FOR TREATING THE PROSTATE
00: -
The invention relates to a prescription for treating the prostate, in particular to the technical field of traditional Chinese medicine. The prescription for treating the prostate consists of the following weights: Bull penis 5-10 servings; Donkey penis 5-10 servings; Cartialgenous 4-8 servings; Oysters 15-20 servings; Marca 15-20 servings; Allium tuberosum rottler 20-30 servings; Songaria cynomorium herb 3-5 servings; Psoralea corylifolia Linn 3-5 servings; Safflower 1-3 servings; Ginger 10-15 servings; Jujube 30-40 servings. The invention provides a prescription for treating the prostate, which has the effect of improving male and female sexual function, solving male impotence and premature ejaculation, and female uterine cold.

21: 2023/02019. 22: 2023/02/20. 43: 2023/04/26
51: B07C
71: Chuzhou University
72: Yinping Zhang, Shuangjie Zhu
33: CN 31: 202210222352.6 32: 2022-03-09

54: A CLASSIFICATION SYSTEM AND METHOD OF HERICIUM ERINACEUS BASED ON MACHINE VISION

00: -

The invention discloses a classification system and a classification method of hericium erinaceus based on machine vision, belonging to the technical field of non-destructive classification of agricultural product processing and intelligent detection. It especially refers to A Classification System and Method of Hericium erinaceus Based on Machine Vision. It includes a hardware module, a feature parameter extraction and analysis module and a quality classification module controlled by an industrial controller. The hardware module mainly includes: hericium erinaceus belt conveying arrangement device, CCD industrial camera, ring light source, rotatable circular grading transmission device, corresponding grade transmission channel, industrial computer, anti-slip shield, fixed bracket, image acquisition card and corresponding connection and assembly basic parts. This grading method determines the grade of hericium erinaceus through image processing and feature parameter extraction. The invention can automatically classify the quality of hericium erinaceus objectively, accurately and efficiently, make up for the deficiency of manual rating, and realize the online nondestructive rapid detection and classification of hericium erinaceus grade.

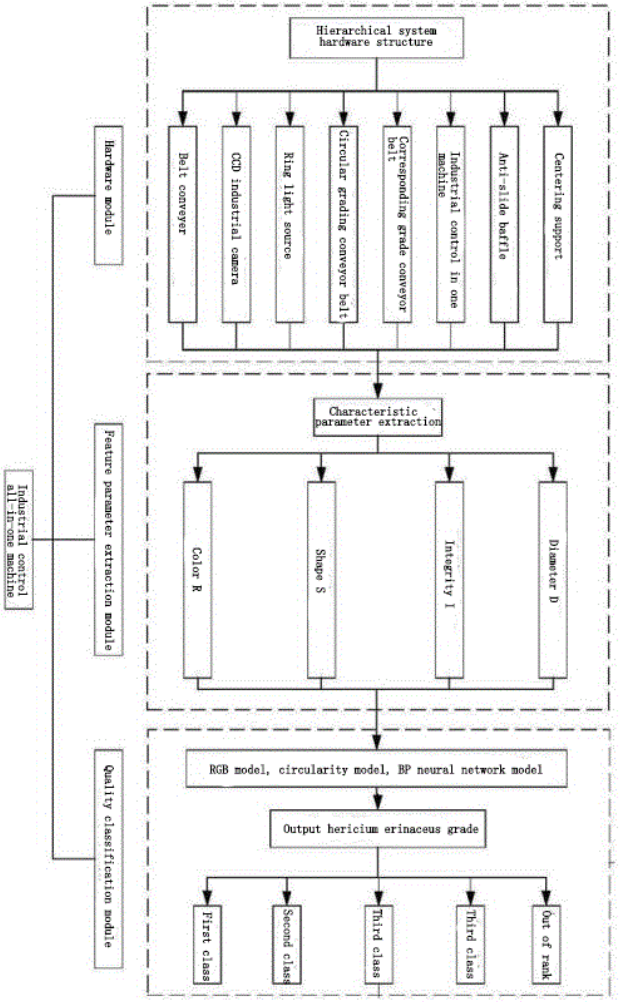

21: 2023/02020. 22: 2023/02/20. 43: 2023/04/26

51: G09B

71: Tonghua Normal University

72: Yan Ren, Shuaichen Jin, Yanyan Zhang, Qingling Zhang, Xiaowei Jin, Sheng Ren

54: A CREATIVE TRAINING CARD FOR TRAINING WRITING THOUGHT

00: -

The invention discloses a creative writing thinking training card, which belongs to the technical field of thinking training equipment; It comprises a training board, one side of the training board is provided with a card drawing box, the card drawing box is provided with an internal adjustment component; The invention realizes the adjustment of the inner space of the card drawing box by setting an adjustment component, which avoids the inability of the card drawing box to store the first card of different sizes. The application scope of the card drawing box is small, which leads to the small application scope of

the training card. By expanding the application scope of the card drawing box, the application scope of the training card is expanded. It is provided with a pressing component, which realizes the pressing of the second card inside the card bag, which avoids the second card easy to fall from the card bag, affecting the stability of the second card extraction. By pressing and fixing the second card to prevent it from falling in the rotation process, thus improving the stability of the second card drawing.

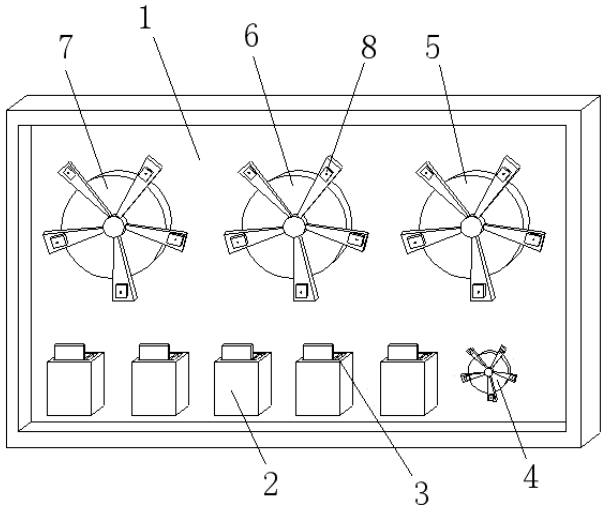

21: 2023/02021. 22: 2023/02/20. 43: 2023/04/26
51: G09B
71: Tonghua Normal University
72: Yan Ren, Shuaichen Jin, Yanyan Zhang, Qingling Zhang, Xiaowei Jin, Sheng Ren
54: AN ELECTRONIC TRANSLATOR DEVICE
00: -
The present invention discloses an electronic translator, which belongs to the technical field of translators; including an electronic translator body, the electronic translator body is provided with a first pillar on one side, a second pillar is provided at the lower end of the first pillar, and a base is provided at the lower end of the second pillar; The present invention by setting the height adjustment component, to achieve the height adjustment of the electronic translator, to avoid the electronic translator can not adapt to the use of different heights of personnel, the electronic translator scope of application is small, so that the electronic translator can adapt to the use of different heights of personnel, and then expand the scope of application of the electronic translator, by setting the angle adjustment component, to achieve rapid adjustment of the angle of the electronic translator, to avoid the electronic translator angle adjustment is more cumbersome, affecting the work efficiency of the situation, By speeding up the angle adjustment of the electronic translator, the efficiency of the work is improved.

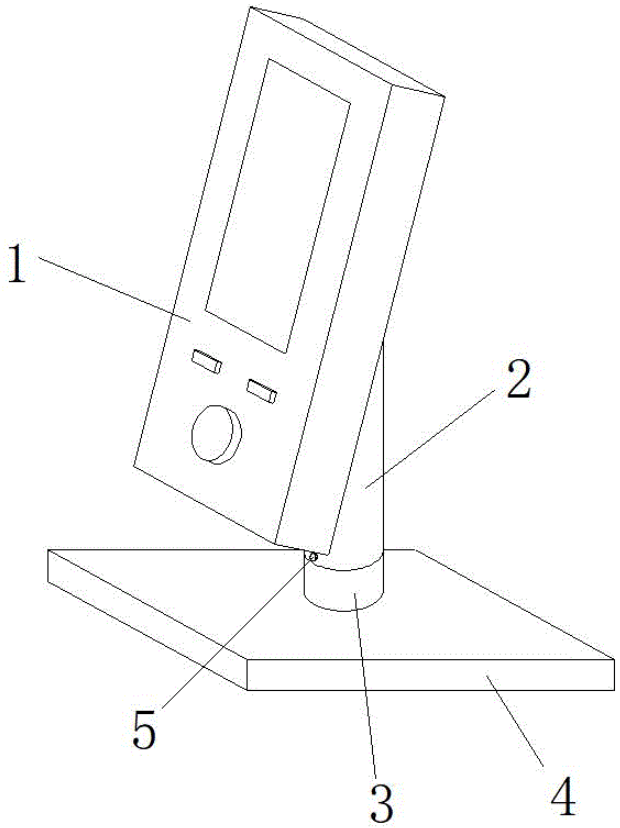

21: 2023/02022. 22: 2023/02/20. 43: 2023/04/26
51: H04R
71: Tonghua Normal University
72: Yan Ren, Shuaichen Jin, Yanyan Zhang, Qingling Zhang, Xiaowei Jin, Sheng Ren
54: AN INTELLIGENT PLAYBACK SPEAKER FOR TEACHING
00: -
The invention discloses an intelligent playback speaker for teaching, belonging to the field of teaching technology. It comprises a speaker body, the speaker body is provided with a buffer component at the bottom, the buffer component is provided with a fixed component on both sides of the speaker body surface is provided with a loudspeaker window, the upper side of the loudspeaker window is provided with a touch screen. The invention provides

a buffer component, and when the main body of the sound box is placed, the deformation of the first damping rod and the first damping spring plays a transverse damping effect, and the deformation of the second damping rod and the second damping spring plays a longitudinal damping effect. This makes the main body of the sound box is not easy to knock and shake, played a good buffer effect; The invention is provided with a fixed component, so that the pressure plate rotates on the surface of the connecting shaft until the silicone sucker is fitted with the surface of the placing surface, and the suction generated can play a good fixing effect on the sound box, so that the sound box is stably placed and not easily moved, the operation is convenient and the structure is not easily damaged.

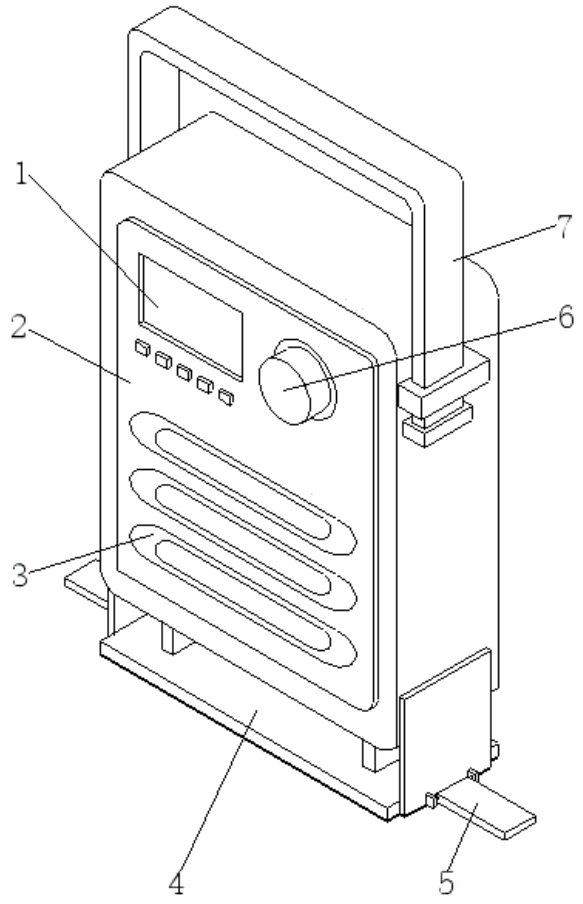

21: 2023/02023. 22: 2023/02/20. 43: 2023/04/26
51: B43L
71: Tonghua Normal University
72: Yan Ren, Shuaichen Jin, Yanyan Zhang, Qingling Zhang, Xiaowei Jin, Sheng Ren

54: AN AUTO-WIPING WHITEBOARD FOR ENGLISH TEACHING

00: -

The present invention discloses an automatic wiping whiteboard for English teaching, which belongs to the field of English teaching technology; It comprises a whiteboard body, and a fixed board is provided below the whiteboard body; The present invention realizes the adjustment of the direction of the English teaching whiteboard by setting the rotary adjustment component, avoiding the situation that the English teaching whiteboard can not rotate and adjust the teaching direction, and it is inconvenient to carry out teaching work in different directions, so that the English teaching whiteboard is convenient to adjust the teaching direction, and it is convenient to adjust the height to adapt to the use of teaching personnel of different heights, thereby expanding the scope of application of the English teaching whiteboard, and realizing the convenient movement of the English teaching whiteboard by setting the mobile component. It avoids the inconvenience of moving the English teaching whiteboard to different places for teaching work, and the practicality of the English teaching whiteboard is poor, which is convenient to move the English teaching whiteboard to different places for teaching work, thereby improving the practicality of the English teaching whiteboard.

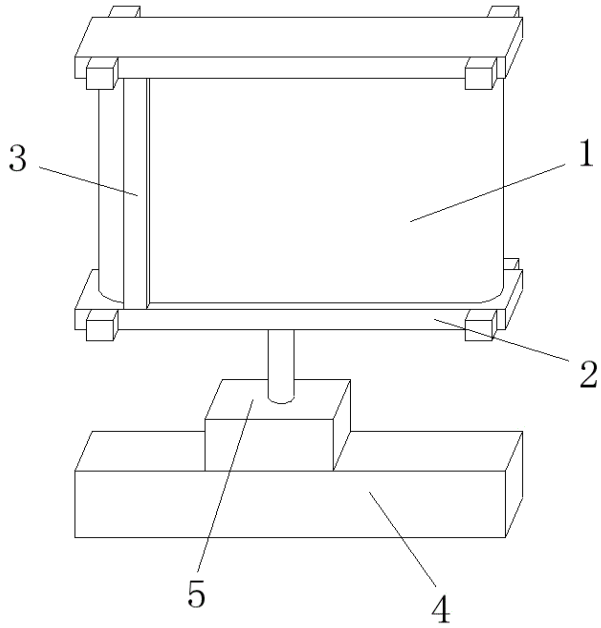

21: 2023/02024. 22: 2023/02/20. 43: 2023/04/26
51: G09B
71: Tonghua Normal University
72: Yan Ren, Shuaichen Jin, Yanyan Zhang, Qingling Zhang, Xiaowei Jin, Sheng Ren
54: AN INTERACTIVE TEACHING DEVICE FOR ENGLISH TEACHING
00: -
The present invention discloses an interactive teaching device for English teaching, belonging to the technical field of English teaching equipment, including a base, the middle above the base is provided with an adjusting component, the side above the base is provided with a storage component, the upper side of the adjusting component is provided with a teaching equipment body, one side of the teaching equipment body is provided with a clamping component, the present invention realizes the effect of facilitating the height adjusting of the device according to the needs of use by setting the adjusting component, so that the device is used when used. It is convenient to adjust the height of the device according to the needs of use, the present invention by setting up a storage component, to achieve the effect of convenient storage and storage of teaching tools, when used, through the storage box to store teaching tools, the partition plate is convenient for the inside of the storage box to separate the use, so that the device in use, convenient for the teaching tools to be stored and stored, improve the practicality of use.

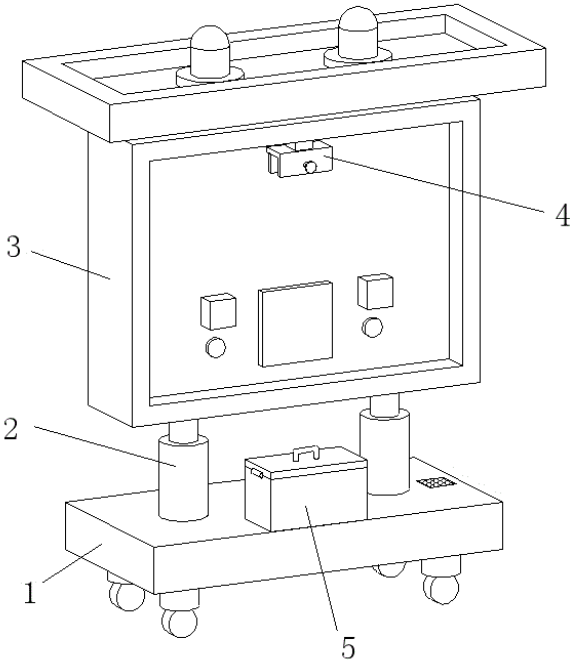

21: 2023/02025. 22: 2023/02/20. 43: 2023/04/26
51: B43L
71: Tonghua Normal University
72: Yan Ren, Shuaichen Jin, Yanyan Zhang, Qingling Zhang, Xiaowei Jin, Sheng Ren
54: AN ENGLISH TEACHING SCRIBER DEVICE
00: -
The present invention discloses an English teaching scriber, which belongs to the field of English teaching technology; including a fixed plate, the lower part of the fixed plate is provided with a moving plate, a slider is provided between the mobile plate and the fixed plate, a handle is provided on one side of the mobile plate, a scribing component is provided on the side away from the handle of the mobile plate, and a dust removal component is provided inside the fixed plate; The present invention by setting the scribing component, to achieve a uniform distribution of the scribing spacing, to avoid the difficulty of ensuring uniform scribing spacing, affecting the scribing effect of the occurrence, by making the scribing spacing evenly distributed, thereby improving the scribing effect, by setting the dust removal component, to achieve the reduction of dust in the scribing process, to avoid the dust produced in the scribing process endangering human respiratory health, by absorbing the dust during the scribing process, thereby reducing the

content of dust in the air, in turn, the human respiratory health is guaranteed.

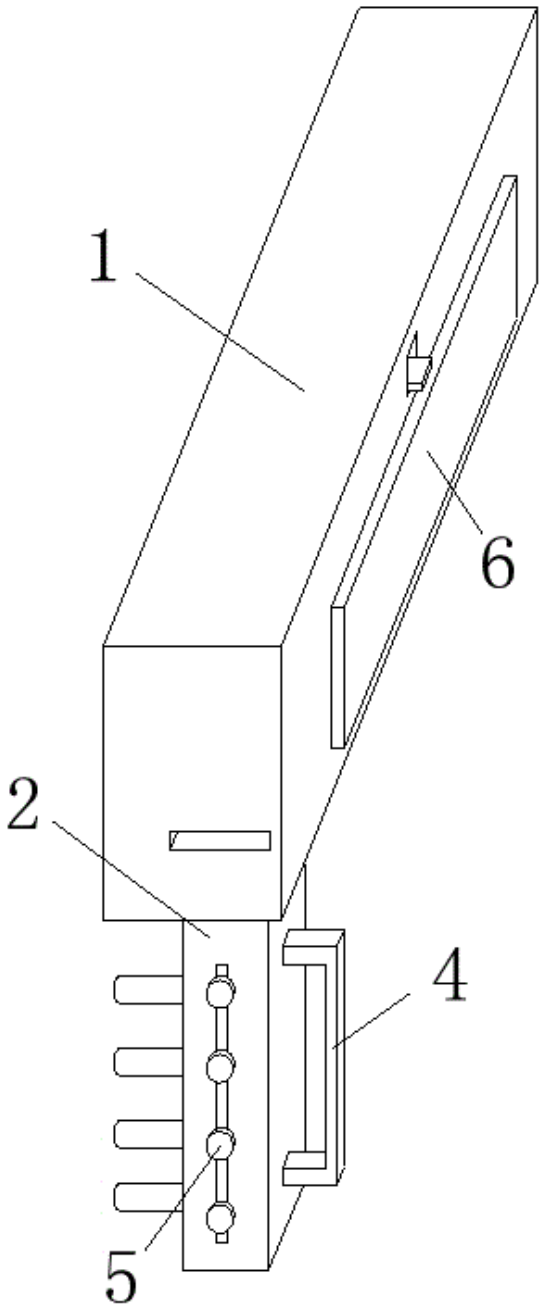

21: 2023/02026. 22: 2023/02/20. 43: 2023/04/26
51: A47F
71: Tonghua Normal University
72: Yan Ren, Shuaichen Jin, Yanyan Zhang, Qingling Zhang, Xiaowei Jin, Sheng Ren

54: A DEVICE FOR DISPLAYING LITERARY WORKS

00: -

The invention discloses a literary works display device, belonging to the technical field of display device, including a base, the top of the base is installed with a supportinging component, the surface of the supportinging component is covered with a display unit, the inner side of the display unit is installed with an adjusting component, the side of the display unit is installed with a transparent window, the side of the transparent window is provided with a display component, the invention by setting a display component. Firstly, put the literary works in the transparent protective frame, and then insert the transparent protective frame into the display unit, the literary works in the tiled state can be better displayed for people to see, the transparent protective frame in the sealed state can make the protective effect of the literary works better, and avoid oxidation and moisture damage; By setting the adjusting component and rotating the control lever, the positioning block can slide on the internal limit of the adjusting base, and the height of the display unit can be adjusted by inserting the positioning block with positioning slots of different heights, so as to make the display effect of the device better.

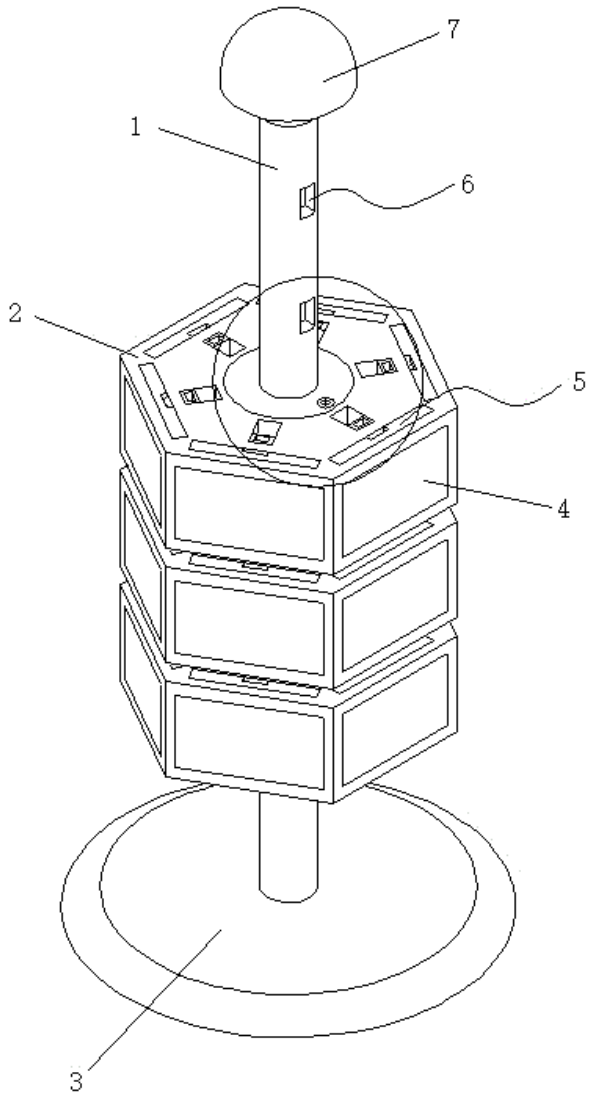

21: 2023/02027. 22: 2023/02/20. 43: 2023/04/26
51: G09B
71: Tonghua Normal University
72: Yan Ren, Shuaichen Jin, Yanyan Zhang, Qingling Zhang, Xiaowei Jin, Sheng Ren
54: A CONVERSATION TRAINING DEVICE FOR ENGLISH TEACHING
00: -
The present invention discloses an English teaching conversation training device, which belongs to the field of English teaching technology. It includes a bottom plate, the bottom plate is provided with a display screen above, the upper end of the display screen is provided with a dust-proof component, the dust-proof component is provided with speakers on both sides, the speaker surface is provided with a microphone, and a lifting component is provided between the display screen and the bottom plate. The present invention is provided with dust-proof components, so that the internal rotation shaft of the installation box rotates to drive the dustproof cloth to unwind, and is fixed by velcro, so that the dustproof cloth can cover the display screen, avoid a large amount of dust deposited on the surface of the display screen when the device is not used for a long time, and play a good dust-proof effect; The present invention provides a stabilization component, so that the supporting rod slides inside the supporting sleeve, and the supporting spring can apply thrust to the supporting rod, so that the supporting rod and the supporting sleeve cooperate to play a good supporting limit role at both ends of the display screen, so that the display screen structure is more stable.

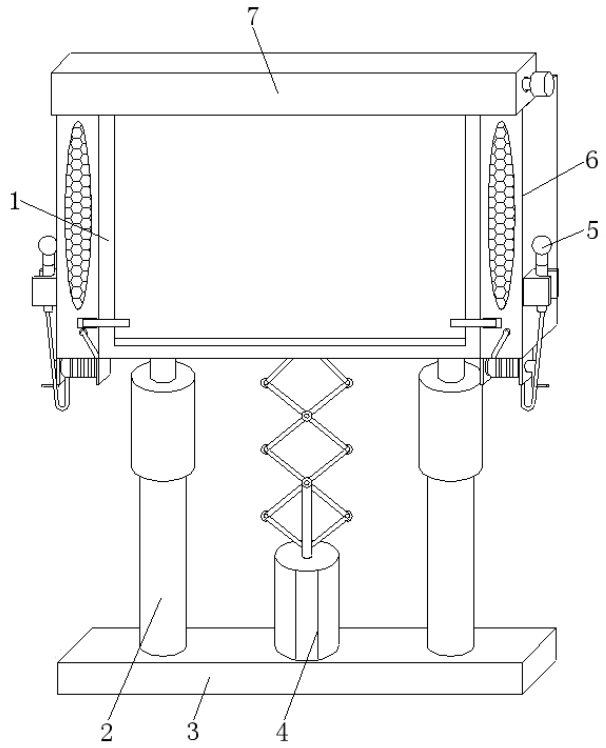

21: 2023/02028. 22: 2023/02/20. 43: 2023/04/26
51: G09B
71: Tonghua Normal University
72: Yan Ren, Shuaichen Jin, Yanyan Zhang, Qingling Zhang, Xiaowei Jin, Sheng Ren
54: A DEVICE FOR DISPLAYING LITERARY WORKS
00: -

The invention discloses an English and Chinese language and literature comparative explanation board, which belongs to the technical field of explanation board. It includes the explanation of the board body, the explanation of the board body is provided with a telescopic component, the explanation of the board body is provided with an adjustment component, adjustment component is provided with a lifting component, lifting component is provided with a base, the base is provided with a mobile component. By setting a telescopic component, the invention realizes the effect of adjusting the length of the explanation board according to the number of explanation contents, making the device convenient to adjust the length of the explanation board according to the number of explanation contents, and improving the practicability of use. The invention realizes the effect of adjusting the angle of the explanation board according to the position of students by setting an adjusting component, which makes the device convenient to adjust the angle of the explanation board according to the position of students when in use, and improves the practicability of use.

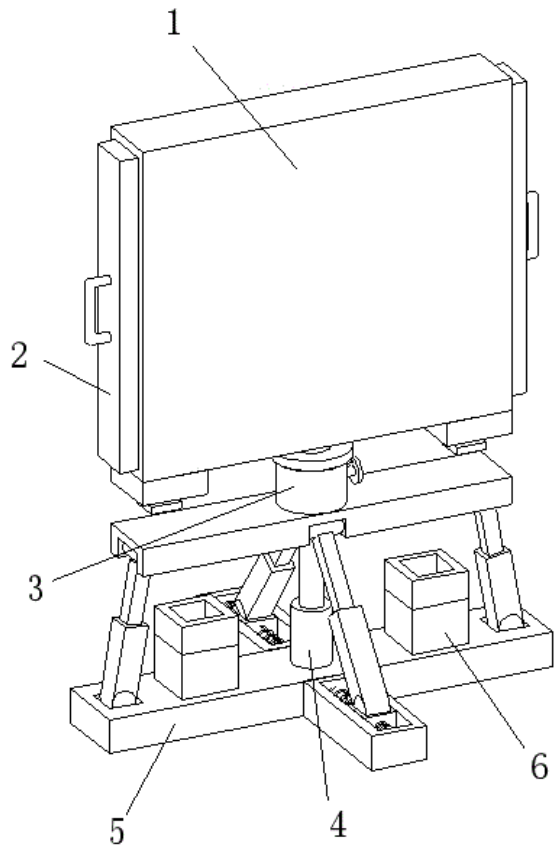

21: 2023/02029. 22: 2023/02/20. 43: 2023/04/26
51: F04B
71: Shenyang University of Technology
72: GUO, Zhongfeng, CAI, Chengrong
54: MECHANICAL MECHANISM
00: -
The invention relates to the technical field of production equipment, and proposes a mechanical mobile phone structure, which comprises: a first drive part; Install and erect the output shaft of the first drive part, and the mounting frame includes the first mounting position and the second mounting position; The mechanical arm assembly is arranged at the first installation position, and the mechanical arm assembly can rotate around the first axis; The counterweight assembly is arranged at the second installation position, and the counterweight assembly includes a connecting seat, a second drive part, a third drive part and a counterweight block; The output shaft of the second driving element is connected with the connecting base; The counterweight is connected with the output part of the third drive part, which is used to drive the counterweight to move to adjust the position of the

counterweight; The controller is used to adjust the rotation angle of the connecting seat and the position information of the counterweight at the connecting seat according to the position information of the centroid of the mechanical arm assembly. By adjusting the rotation angle of the counterweight assembly and the position of the counterweight block, the overall rotational inertia of the manipulator mechanism during rotation is reduced, and the rotational vibration is reduced.

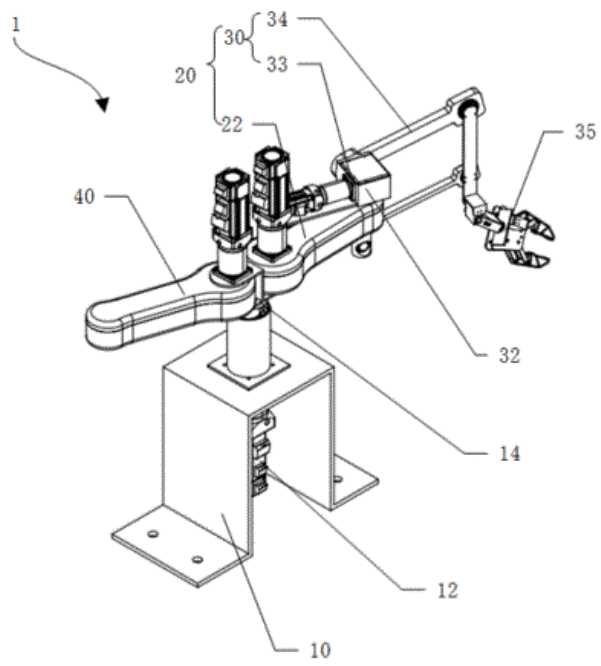

21: 2023/02030. 22: 2023/02/20. 43: 2023/04/26
51: A61F
71: Shenyang University of Technology
72: GUO, Zhongfeng, LIU, Jian
54: A VIBRATING SPINE REHABILITATION BED
00: -
The invention relates to a vibration spine rehabilitation bed for rehabilitation of patients with scoliosis, which comprises a bed body, a mattress, a vibration part, a moving part, a control part, a folding backrest armrest and a visual detection part; The mattress is placed on the bed board. The mattress is divided into four parts. Each part is connected by zipper, which is easy to remove and replace each part of the mattress; The vibration part is set under the bed, and the crank rocker mechanism is used to drive the vibration pad to move in the vertical direction, so as to carry out vibration rehabilitation for the scoliosis spine; The moving part is fixed under the bed and connected with the vibration part to drive the vibration part to move along the patient's spine; The control department is connected with the bed body through the telescopic support, and can realize the control functions of starting power, starting/stopping, vibration intensity selection, position adjustment, folding backrest armrest control, visual detection, etc; The folding backrest armrest is connected to both sides of the bed through the rotation axis, which can prevent the patient from rolling off the bed and facilitate the patient to get up. During the treatment of the patient, it can extend and clamp to the patient's direction to prevent the dislocation of the spine and the vibration part of the patient during the treatment. The folding backrest armrest has a handle above it, which conforms to the ergonomics, and can be held by the patient during the rehabilitation process, so as to keep the body stable, It can be turned over and placed under the bed body when the patient gets on and off the bed; The vision detection department is fixed on the top of the bed through the camera carrier, which is used to detect the position of the patient's upper torso and analyze the shape of scoliosis. Data transmission is carried out through Ethernet and the control department. The vibration spine rehabilitation bed has compact structure and perfect functions, which has good rehabilitation effect for patients with scoliosis.

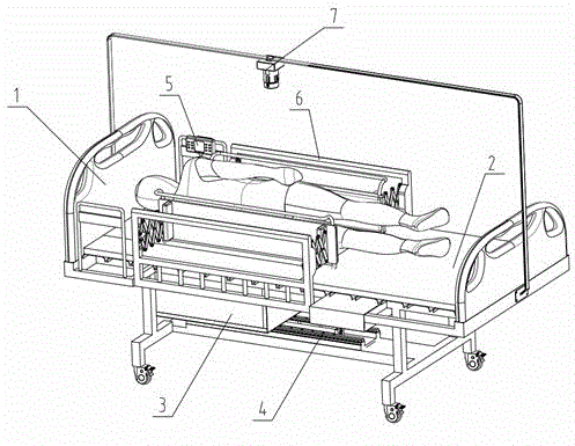

21: 2023/02031. 22: 2023/02/20. 43: 2023/04/26
51: B22F
71: Shenyang University of Technology
72: ZHANG,Song, WANG,Tao, HAN,Xue, WANG,Rui, WU,Chenliang, ZHANG,Chunhua

54: A PROCESS METHOD FOR IMPROVING THE PROPERTIES OF GRADIENT ALLOY STEEL BY LASER MELTING DEPOSITION

00: -

The invention provides a heat treatment process method for improving laser melting deposition gradient material, namely improving the performance of gradient alloy steel. The powder to improve the performance of laser melting deposition gradient alloy steel is composed of 12CrNi2 powder and a new wear-resistant stainless steel powder in a certain proportion. The invention adopts laser melting deposition technology to manufacture gradient material for nuclear emergency camshaft, and carries out post-heat treatment on it, and this can bring gradient modified material with excellent comprehensive properties. The invention adopts laser melting deposition technology to manufacture gradient material for nuclear emergency camshaft, and carries out post-heat treatment on it, the microstructure of stainless steel is obviously refined, and it has high hardness and excellent corrosion resistance, meets the service performance of the camshaft of nuclear power emergency diesel engine, further improves the safety of nuclear power and has significant economic and social benefits.

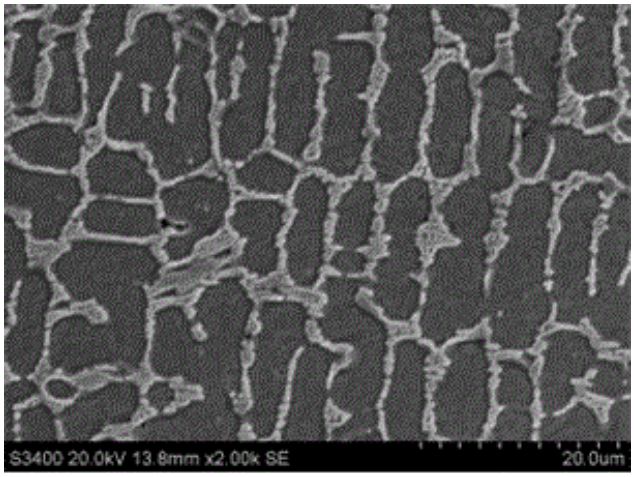

21: 2023/02032. 22: 2023/02/20. 43: 2023/04/26
51: C22C
71: Shenyang University of Technology
72: WU, Hao, ZHANG, Song, CAO, Bosheng, WANG, Rui, WU, Chenliang, ZHANG, Chunhua

54: A METHOD OF LASER CLADDING WEAR-RESISTANT HIGH ENTROPY ALLOY COATING DOPED WITH RARE EARTH ELEMENTS ON STAINLESS STEEL SURFACE

00: -

The invention relates to a method of laser cladding wear-resistant high entropy alloy coating on stainless steel surface: the high entropy alloy material is composed of Fe, Ni, Co, Cr, Nb and rare earth element Ce. The specific composition of the alloy coating is Fe: 24.35wt% - 24.85wt%, Ni: 24.35wt% - 24.85wt%, Co: 24.35wt% - 24.85wt%, Cr: 24.35wt% - 24.85wt%, Nb: 0-2wt%, Ce: 0.6wt%. The method for preparing wear-resistant high entropy alloy coating is as follows: 1) vacuum melting, atomization and screening process to prepare spherical FeNiCoCr-based alloy powder, Nb powder and Ce powder, and then ball milling and drying; 2) grind, clean and dry 316 stainless steel substrate, and then preheat; 3) the fiber laser is multi-pass coated with FeNiCoCr based high entropy alloy powder as the preset powder. The prepared FeNiCoCr based high entropy alloy coating has uniform microstructure and good wear resistance, which significantly improves the wear resistance of the substrate.

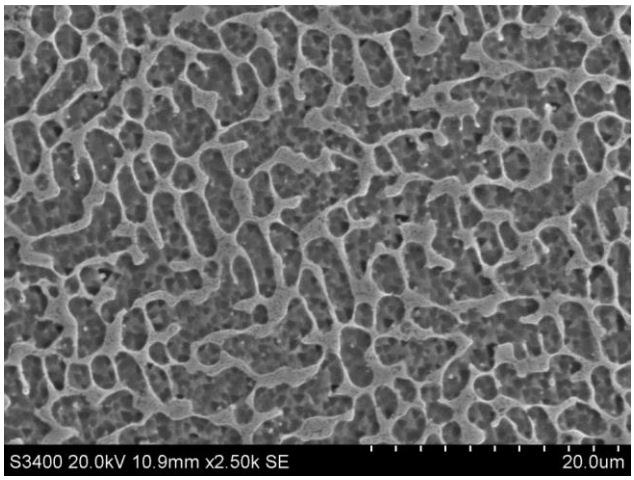

21: 2023/02033. 22: 2023/02/20. 43: 2023/04/26
51: C22C
71: Shenyang University of Technology
72: ZHAO, Te, ZHANG, Chunhua, DU, Yi, HAN, Xue, WU, Chenliang, ZHANG, Song

54: A MATERIAL AND METHOD FOR PREPARING CORROSION-CAVITATION-RESISTANT MODIFIED INCONEL 625 COATING

00: -

The invention relates to a material and a method for preparing a corrosion-cavitation-resistant modified Inconel 625 coating. The welding wire with diameter of 0.8- 1.4 mm doped with rare earth element Re

was selected as the raw material, and the coating was clad on the CMT welding system. Before the preparation of the coating, the 316 stainless steel substrate was fully polished to remove corrosion, and the cladding was carried out by multi-pass lap built-up welding. A good metallurgical bond was formed between the Inconel 625 coating and the substrate without pores and cracks. CMT process can effectively avoid the corrosion resistance of the coating caused by dilution rate and microstructure coarsening. In addition, the solid solution of elements such as Cr, Mo and Re in the coating can provide solid solution strengthening effect and excellent corrosion resistance. A large number of dispersed MC-type composite carbide precipitates dominated by NbC provide the second phase strengthening effect, which makes the Inconel 625 coating can effectively resist damage caused by wear, corrosion and cavitation erosion. It can protect the 316 stainless steel substrate, and then effectively prolong the service life of 316 stainless steel mechanical components in marine engineering.

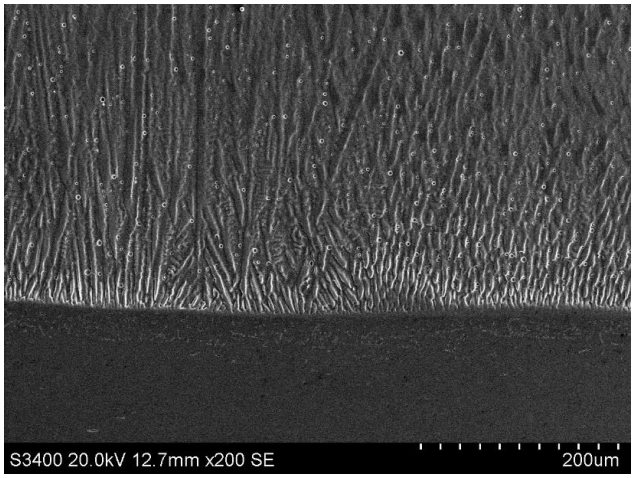

21: 2023/02034. 22: 2023/02/20. 43: 2023/04/26
51: B29C
71: Shenyang University of Technology
72: WANG, Zhaozhi, WANG, Kailong, ZHAO, Jing, JIAO, Zhibin, KONG, Xiangxi

54: A 3D PRINTING METHOD FOR COMPOSITE MATERIAL DIRECT INK WRITING WITH CONTROLLABLE REINFORCEMENT PHASE ARRANGEMENT

00: -

The invention discloses a 3D printing method for composite material direct ink writing with shear stress field assisted control of reinforcement phase arrangement. In the process of printing, by controlling the nozzle rotation mechanism to drive the nozzle rotation, the printing ink in the nozzle can generate circumferential shear stress field, so that the printing ink produces shear rheological effect during extrusion, and the reinforcement phase is arranged helically along the printing path of the ink and the positioning is controllable. By this method, the microstructure precision of the printed composite material can be smaller than the diameter of the nozzle, and the local mechanical properties of the printed composite material can be adjusted according to the demand. Compared with ordinary 3D printed products, this method can improve the mechanical properties of printed products, and meet the printing requirements of high-performance composite material with complex gradient bionic structures, such as the Bouligand structure of the hammer-like dactyl clubs of peacock mantis shrimp, brick-concrete structure of shellfish pearl layer, bamboo columnar fiber structure, etc.

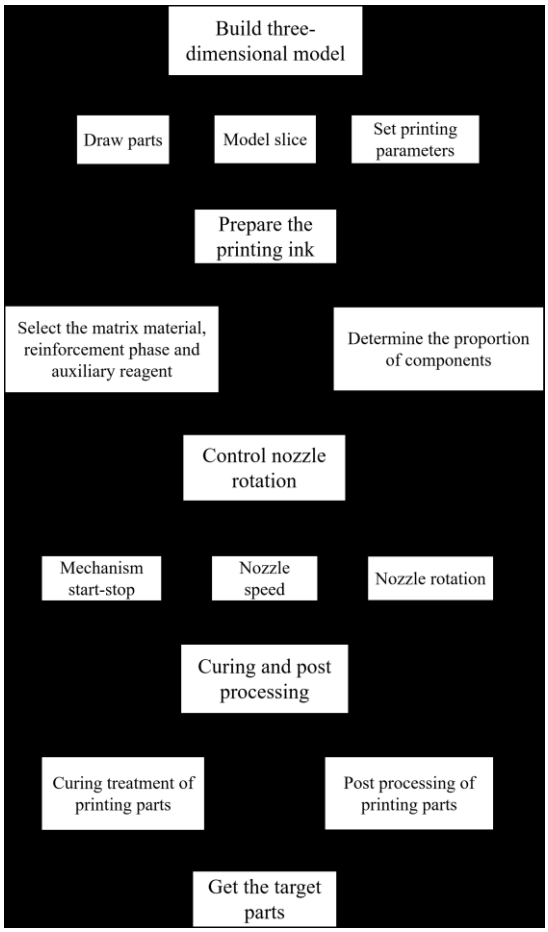

21: 2023/02035. 22: 2023/02/20. 43: 2023/04/26
51: A01G
71: Institute of Highland Forest Science, Chinese Academy of Forestry
72: WU, Jiangchong, SHANG, Ruiguang, SU, Jianrong, YANG, Yuchun, BAI, Haidong, WAN, Xiaoli, FAN, Shaoguang, HE, Siteng, ZHENG, Yixing, WANG, Lijuan, DAI, Rongxuan
33: CN 31: 2022103176715 32: 2022-03-29
54: METHOD FOR IMPROVING LAND UTILIZATION RATE OF MACADAMIA SPP. FOREST
00: -
The present invention provides a method for improving a land utilization rate of a Macadamia spp. forest, including the following step: planting any one or more of Lipu taro, Amorphophallus bulbifer, Lablab purpureus or Desmodium uncinatum under a Macadamia spp. forest; a stand canopy density of the Macadamia spp. forest is 0.1 or below; and a distance between the Lipu taro, the Amorphophallus bulbifer, the Lablab purpureus or the Desmodium uncinatum and the Macadamia spp. forest is 0.7 m or above. The method of the present invention can effectively improve the growth amount and yield of the forest, shorten an operating cycle of the forest land, effectively improve the continuous operating and comprehensive operating incomes of the forest land, effectively solve the contradiction in water, fertilizer and light between the forest and crops, and improve the physical and chemical properties of soil of the forest land.

21: 2023/02036. 22: 2023/02/20. 43: 2023/04/26
51: G09F
71: BAICHENG NORMAL UNIVERSITY
72: CHEN, Danzuoni
54: SPECIAL PUBLICITY DEVICE FOR DRAMA CLUB
00: -
Disclosed is a special publicity device for a drama club. The special publicity device includes a bottom box, where an upper surface of the bottom box being provided with lifting through holes, and lifting hydraulic cylinders are provided in the bottom box; a lifting plate, where an upper surface of the lifting plate is used for fixing a publicity box; a lifting cleaning device connected to a lifting brush rod; a traveling device provided on a lower surface of the bottom box; a pushing handrail fixed at one side of the bottom box; and a control panel, where the lifting hydraulic cylinders and the lifting cleaning device are electrically connected to the control panel. The present invention can adjust a position of the publicity box and clean a surface thereof.

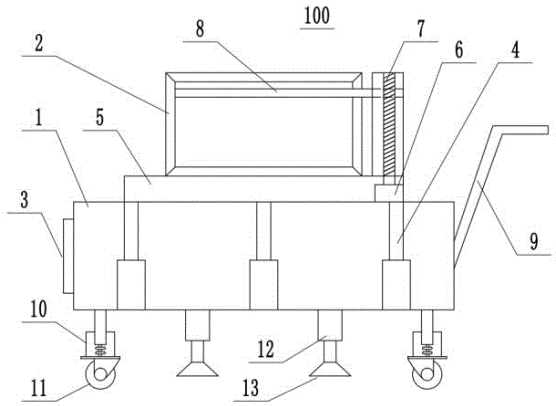

21: 2023/02037. 22: 2023/02/20. 43: 2023/04/26
51: G01N
71: Gansu Agricultural University
72: ZHONG Yuan
33: CN 31: 2022115638325 32: 2022-12-07
54: PHARMACEUTICAL EXPERIMENT SAMPLING DEVICE
00: -
The invention discloses a pharmaceutical experiment sampling device, which comprises a housing, wherein an air component is installed in the housing, and the air component is communicated with a sampling tube, and one end of the sampling tube extends out of the housing and is connected with the housing in a sliding way; the bottom end of the side wall of the housing is provided with a handle, a control component is arranged in the handle, and the control component is electrically connected with the air component; the sampling tube is slidably connected with an extraction component which is electrically connected with the control component; one end of the sampling tube far away from the air component is fixedly connected with an extraction head, and an interception component is installed in the extraction head, and the interception component is electrically connected with the control component. The invention effectively improves the sampling accuracy of pharmaceutical experiment samples and the accuracy and reliability of pharmaceutical experiment data; the environmental pollution caused by sample leakage is reduced, and

the protection of experimental personnel is improved.

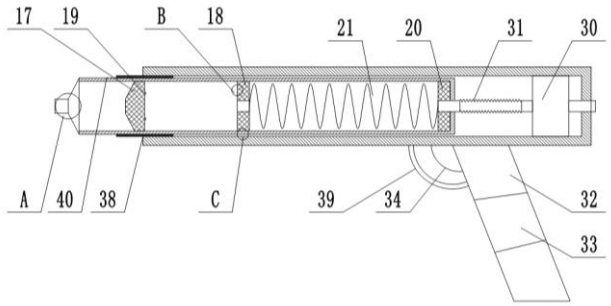

21: 2023/02038. 22: 2023/02/20. 43: 2023/04/26
51: B01J
71: Shangluo University
72: YUAN Fei, ZHANG Rong, YUAN Chunmei, QIAO Chengfang, CAO Baoyue, ZHOU Chunsheng, DI Yanqing, GAO Xia, WANG Jun, YANG Qiang, LIU Yongliang, SHI Jingtao, LUO Xiangxiang, LIU Qian
54: METAL-ORGANIC FRAMEWORKS-DYSPROSIUM COMPLEX, PREPARATION METHOD AND APPLICATION THEREOF
00: -
The invention discloses an MOF-Dy complex and a preparation method and application thereof, and belongs to the technical field of wastewater treatment. The preparation method of the MOF-Dy complex comprises the following steps: adding 5-(1,2,4-triazole-1-aryl)-1,3-phthalic acid and oxalic acid into water, then adding dysprosium-based metal salt, carrying out ultrasonic treatment, and carrying out hydrothermal reaction on the obtained mixture to obtain the novel MOF-Dy complex; wherein, the ultrasonic treatment parameters are: the power is 150-250 W, and the time is 35-45 min. With 40 mg of MOF-Dy complex, 11.875 mg/g methyl violet can be degraded in 40 min, and the treatment rate of methyl violet dye remains at 92-95 percent.

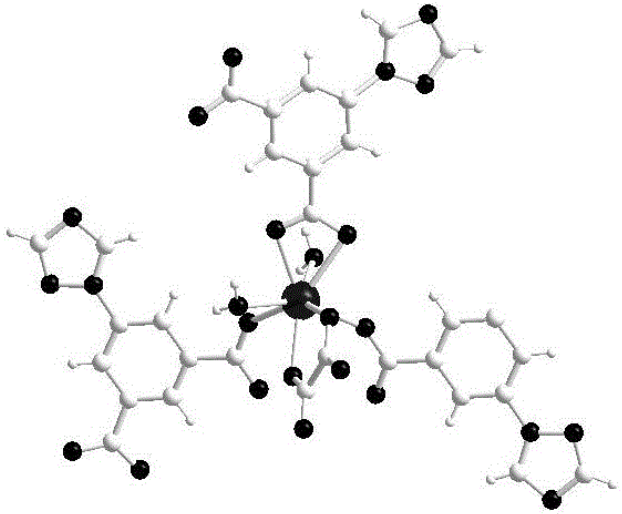

21: 2023/02039. 22: 2023/02/20. 43: 2023/04/26
51: A61B; B08B
71: AFFILIATED HOSPITAL OF WEIFANG MEDICAL UNIVERSITY
72: SHI Wenhao, HE Cui, WANG Peng
54: SCALPEL CLEANING DEVICE FOR OPHTHALMIC SURGERY
00: -
The invention discloses a scalpel cleaning device for ophthalmic surgery, which comprises a cleaning box body, where a through hole is formed at the top of the cleaning box; a lifting base is arranged in the cleaning box; the lifting base is arranged corresponding to the through hole; the middle part of the lifting base is detachably connected with a scalpel; the middle part of the side wall of the cleaning box body is provided with a first cleaning part; the first cleaning part is located at the periphery of the scalpel; the bottom of the cleaning box body contains cleaning liquid for cleaning the scalpel; the bottom of the first cleaning part is located in the cleaning liquid; and the bottom of the cleaning box body is installed with a second cleaning part and the second cleaning part is located in the cleaning liquid. The invention has the advantages of simple structure, convenient use, cleanness, high efficiency and high safety.

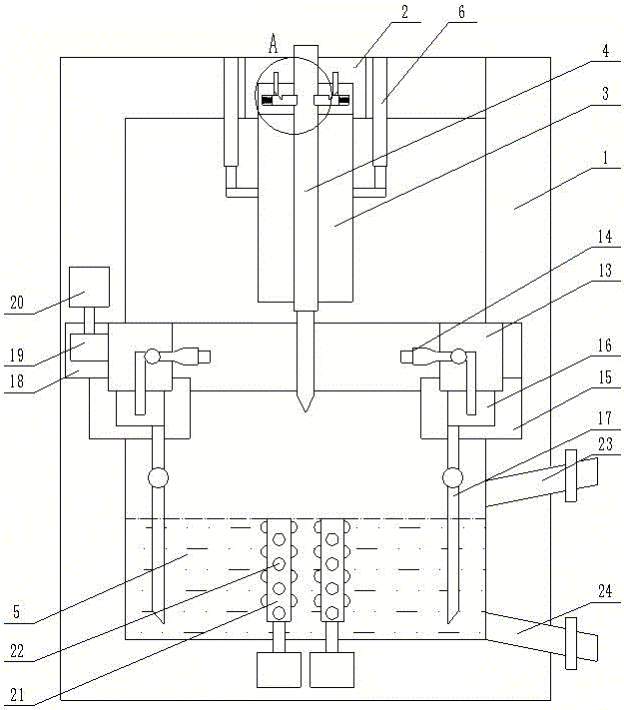

21: 2023/02040. 22: 2023/02/20. 43: 2023/04/26
51: B21D
71: Huazhong University of Science and Technology
72: XU, Wei, LI, Liang, LI, Changxing, LAI, Zhipeng, HAN, Xiaotao, CAO, Quanliang, ZHANG, Zixuan
33: CN 31: 2022116860106 32: 2022-12-27
54: ELECTROMAGNETIC FORMING DEVICE AND ELECTROMAGNETIC FORMING METHOD
00: -
The invention provides an electromagnetic forming device and an electromagnetic forming method. The electromagnetic forming device includes a solenoid type excitation coil which is closely nested at an upper half portion of a magnetic field shaper. A lower half portion of the magnetic field shaper is arranged above a to-be-formed workpiece. A slot is formed in a circumferential direction of the magnetic field shaper. A mold is used for bearing the to-be-formed workpiece. When the electromagnetic forming device works, the solenoid type excitation coil generates a pulsed magnetic field around through pulse current discharge. The pulsed magnetic field generates induced eddy current on inner and outer surfaces of the upper half portion of the magnetic field shaper. The induced eddy current is conducted to a lower end surface of the lower half portion of the magnetic field shaper through the slot, such that the pulsed magnetic field is reshaped and is concentrated between the lower half portion of the magnetic field shaper and the to-be-formed workpiece; and a pulsed electromagnetic force is produced on a to-be-formed region of the to-be-formed workpiece to make the to-be formed region of the to-be-formed workpiece deform towards the mold under the action of the pulsed electromagnetic force. The invention achieves accurate and effective regulation and control of spatial distribution of a formed magnetic field in the electromagnetic forming process of a plate.

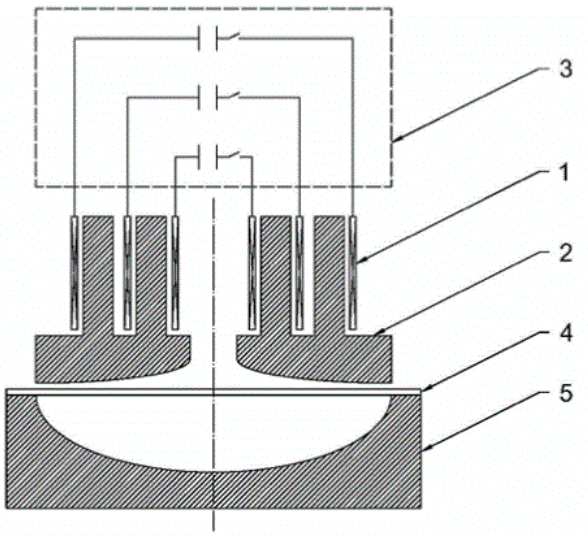

21: 2023/02041. 22: 2023/02/20. 43: 2023/04/26
51: A61B
71: Ningde Mindong Hospital
72: Zhang Daichang, Cai Li, Zhan Wenfeng, Xiao Dexian, Wang Qingling, Huang Weilong, Lin Jianyuan, Guo Dengfang, Zhang Chun, Lin Feng
54: A HERNIA SAC RETURNING AND OCCLUDING DEVICE
00: -
A hernia sac returning and occluding device, which comprises a occluding umbrella and a guide rod screwed and rotatably connected to the lower end of the occluding umbrella, the occluding umbrella comprises an elastic umbrella cover and a tubular umbrella handle connected to the inner top of the elastic umbrella cover, an elastic metal mesh is arranged inside the elastic umbrella cover, and the elastic metal mesh is opened to present the shape of an umbrella, the inner top of the tubular umbrella handle is fixed with a spring, and the lower end of the spring is fixed with a fixing device, and the spring can push the fixing device out of the tubular umbrella

handle, the inner lower end of the tubular umbrella handle is provided with threads, and the threads are rotatably matched with the upper end of the guide rod, and the lower end of the fixing device withstands the upper end of the guide rod due to spring tension. The fixing device comprises a base, and three barbs are uniformly arranged on the upper part of the base, and the barbs are connected to the base in inertial rotation, after the fixing device is pushed out of the tubular umbrella handle, the barbs open outwards with inertia. When the elastic umbrella cover is folded, the lower end of the tubular umbrella handle is exposed, and the barbs are provided with tips.

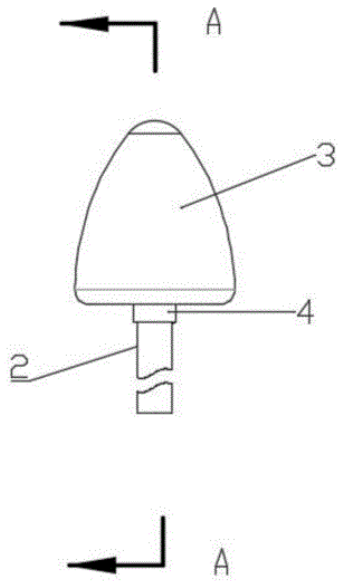

21: 2023/02042. 22: 2023/02/20. 43: 2023/04/26
51: G01N
71: Nanjing Xiaozhuang University
72: CAO Jianjun, LIU Yongjuan
54: DEVICE FOR MONITORING SOIL MOISTURE IN COTTON FIELD
00: -
The invention discloses a cotton field soil moisture monitoring device, which relates to the technical field of cotton field soil. The invention comprises a base plate, wherein both sides of the inside of base plate are provided with first movable grooves, the inside of the first movable grooves is movably connected with a first movable block, the front surface of the first movable block is fixedly connected with handles, and the bottom end of the base plate and the bottom end of the first movable block are respectively hinged with the top end of a telescopic bracket through a rotating shaft. According to the telescopic bracket, the connecting plate, the adjusting threaded post, the adjusting threaded sleeve, the conical insertion fixing head and other parts can be retracted during carrying and transportation, so that the overall volume of the device is reduced, and the prompt plate can be quickly disassembled and installed; and meanwhile, when the device is installed in a position that is not easy to find, the eye-catching effect of the whole device can be improved through the prompt plate, so that the practicability and convenience of the device are improved.

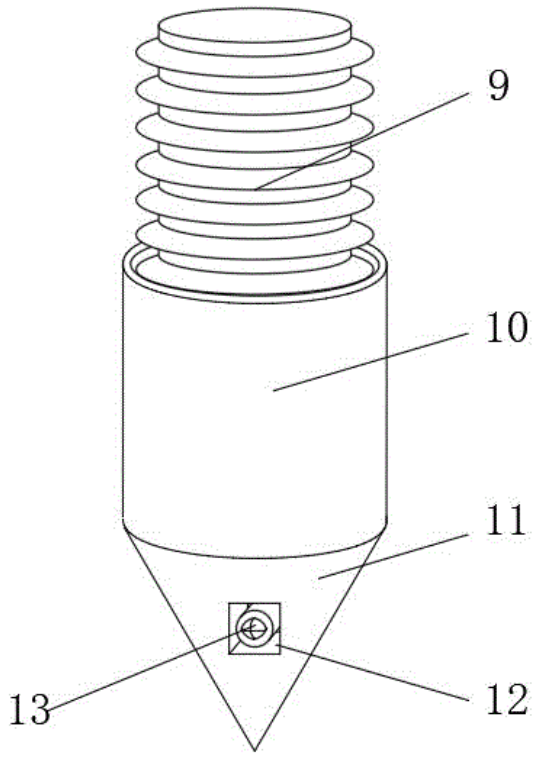

21: 2023/02043. 22: 2023/02/20. 43: 2023/04/26
51: H04N
71: Institute of Ecological Conservation and Restoration, Chinese Academy of Forestry
72: WANG Yuhang, WEN Wanyu, LIU Qi, GONG Minghao
54: MANGROVE PHENOLOGY MONITOR CAMERA AND METHOD
00: -
Aiming at the defects of the prior art, the invention provides a mangrove phenology monitoring camera and method, and solves the defects in the prior art..

Through the related module and the corresponding camera workflow, the dynamic real-time monitoring of mangrove phenology can be realized, and the problems of simple monitoring index, short standby time, low shooting intelligence, short service life, high maintenance cost, easy damage and the like existing in the application of the traditional phenology monitoring digital camera to mangrove phenology monitoring are overcome.

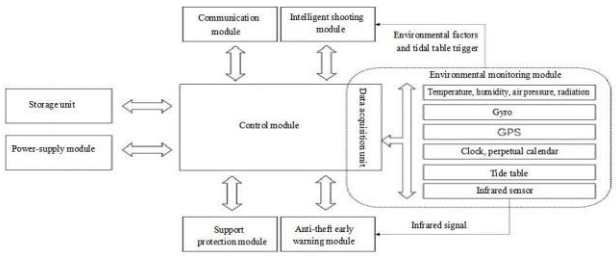

21: 2023/02044. 22: 2023/02/20. 43: 2023/04/26
51: A23N
71: Hebei Normal University Of Science & Technology
72: Ren Xiaoguang, Cheng Hui, Zhang Jiancai, Chen Lidong, Li Guofang
54: CHINESE CHESTNUT OPENING MACHINE
00: -
The invention provides a Chinese chestnut opening machine. And it comprises a posture adjusting device, and a feeding and returning device is arranged at the side wall position of the posture adjusting device; A vibration centering device is arranged at the discharge port position of the feeding and returning device, and a rack is arranged at one side position of the vibration centering device far away from the feeding and returning device; Wherein the side wall of the rack is provided with a clamping device, the rack is provided with a protective box, and the clamping device is provided with a flexible incision device; And the inner wall of the feeding and returning device is fixedly connected with a returning slideway, two groups of conveyor belt wheels are rotatably connected to the two side walls of the feeding and returning device; A conveyor belt is arranged between the two groups of conveyor belt wheels, and a motor is arrange at any one of the two groups of conveyor belt wheel. According to the invention, the Chinese chestnuts are firmly clamped, the Chinese chestnuts are stably conveyed, the three-sided opening of the center of the chestnut cambered surface is realized, the opening length is met, and the automatic cutting greatly improves the cutting efficiency.

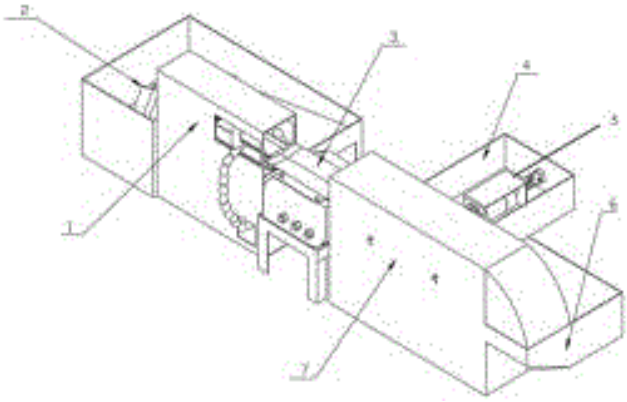

21: 2023/02045. 22: 2023/02/20. 43: 2023/04/26
51: A61K; A61P
71: Southwest Forestry University
72: WANG, Juan, PAN, Yue, ZHANG, Pengyuan, SONG, Jing, LI, Jin
54: SKIN CARE COMPOSITION CONTAINING PAEONIA DELAVAYI SEED OIL AND PREPARATION METHOD THEREOF
00: -
Disclosed are a skin care composition containing paeonia delavayi seed oil and a preparation method thereof. The composition includes the following ingredients in parts by mass: 20 - 30 parts of paeonia delavayi seed oil, 0.01 - 1 part of paeonia delavayi essential oil, 30 - 40 parts of a paeonia delavayi hydrosol, 1 - 5 parts of a paeonia delavayi antioxidant, 3 - 5 parts of an emulsifier, 0 - 10 parts of a surfactant, 1 - 10 parts of a humectant, and 0 - 0.1 part of a bacteriostat. The preparation method includes heating an oil phase in water bath, uniformly mixing various ingredients in an aqueous phase, heating in water bath, repeatedly adding few oil phase into the aqueous phase to obtain a mixture, heating for several minutes, and standing still until cooling down to obtain a natural skin care product containing paeonia delavayi seed oil.

21: 2023/02046. 22: 2023/02/20. 43: 2023/04/26
51: F01N
71: North China Institute of Aerospace Engineering
72: Liming XIANG, Hongsheng WANG, Sihao LI
33: CN 31: 202210200751.2 32: 2022-03-02
54: A KIND OF EXHAUST GAS PURIFICATION DEVICE FOR TUNNEL CONSTRUCTION MACHINERY

00: -
The present invention discloses an exhaust gas purification mechanism for tunnel construction machinery. The top of the loader is provided with an exhaust gas purification mechanism, and a fuel tank compressed air chamber is provided at the top of the inner side of the fuel system. The fuel tank compressed air chamber is connected to the fuel tank fuel chamber at the bottom of the fuel tank compressed air chamber. The invention will engine exhaust pollutants into the combustion chamber of the exhaust gas cleaning mechanism, the control system detects if the temperature is lower than 600 degrees Celsius, it will inject fuel ignition combustion, maintain the combustion chamber temperature above 600 degrees Celsius, the engine exhaust carbon soot particles and harmful substances in the combustion chamber after full combustion. Discharged into the purification box, exhaust and then through the absorption and purification of weak alkaline liquid, transformed into a clean gas into the tunnel atmosphere, maintaining the tunnel air clean, to protect the health of construction personnel. Through the simple structure, precise control is achieved, which not only makes the purification efficiency in the tunnel increase, but also makes the production cost low and easy to promote the implementation.

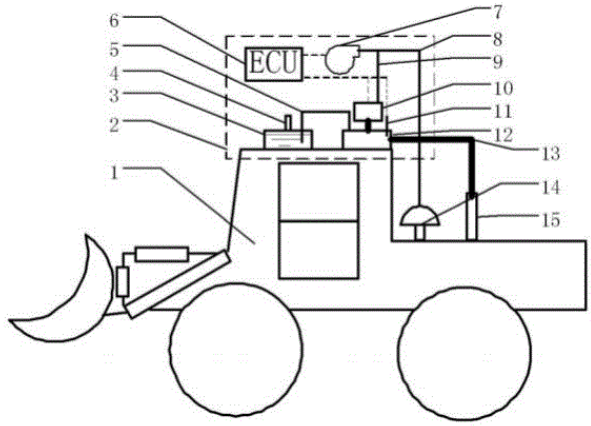

21: 2023/02047. 22: 2023/02/20. 43: 2023/04/26
51: A01C
71: Gansu Agricultural University
72: ZHONG Yuan
33: CN 31: 2022115634485 32: 2022-12-07
54: PESTICIDE SPRAYING DEVICE FOR AGRICULTURAL CULTIVATION

00: -
The invention relates to the technical field of agricultural production equipment, in particular to a pesticide spraying device for agricultural cultivation, which comprises a vehicle body, wherein the bottom of the vehicle body is rotatably connected with a plurality of wheels; one end of the vehicle body is fixedly connected with a handle; the top of the vehicle body is provided with a liquid storage assembly; the middle of the vehicle body is hinged with two connecting rods which are symmetrically arranged; a second power part is arranged below the connecting rod; one end of the connecting rod far from the vehicle body is rotatably connected with a water guide pipe; one end of the water guide pipe is in transmission connection with a first power part; the end of the water guide pipe is connected with a first water pipe; and the other end of the first water pipe is communicated with the liquid storage assembly, and the side wall of that water guide pipe is communicated with a liquid spraying part. The invention can achieve the purpose of spraying the liquid medicine on the back of the blade.

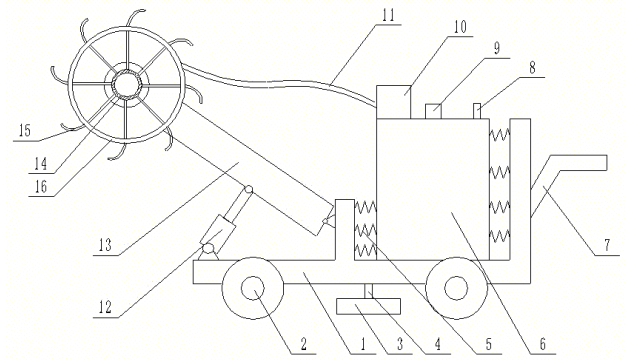

21: 2023/02048. 22: 2023/02/20. 43: 2023/04/26
51: A61K
71: Hunan Academy of Forestry, Hunan Hi-tech Bio-Agro Co., Ltd, CHANGSHA UNIVERSITY, HUNAN AGRICULTURAL UNIVERSITY
72: YANG Yan, GUO Shengyu, KUANG Ding, YANG Que, CHEN Jingzhen, LI Peiwang, JI Yuena, LI Li
54: GARDENIA FACIAL MASK AND PREPARATION METHOD THEREOF
00: -
The invention discloses a gardenia facial mask and a preparation method thereof, and belongs to the technical field of masks. The gardenia facial mask is prepared from the following raw materials in parts by weight: 20-70 parts of gardenia extract, 5-10 parts of

gardenia oil, 1-5 parts of salvia miltiorrhiza extract, 1-5 parts of scutellaria baicalensis extract, 1-5 parts of nicotinamide, 1-10 parts of glycerol, 1 - 5 parts of hydroxyethyl cellulose, 1 - 5 parts of allantoin, 1 - 5 parts of sodium hyaluronate, 1 - 5 parts of sodium polyacrylate, 1 - 5 parts of methyl benzoate, 1 - 10 parts of propylene glycol, 1 - 5 parts of caprylyl glycol, 1 - 5 parts of arginine ferulate, 0.01 - 0.05 parts of methyl hydroxybenzene, 2 - 30 parts of water. The components of the gardenia facial mask are safe and easy to absorb, and can deeply care the skin, and have multiple functions.

21: 2023/02049. 22: 2023/02/20. 43: 2023/04/26
51: G08B
71: North China Institute of Aerospace Engineering
72: Liming XIANG, Sihao LI, Hongsheng WANG
33: CN 31: 202210200755.0 32: 2022-03-02
54: A KIND OF ELEVATION DETECTION ALARM DEVICE FOR PILE FOUNDATION CONCRETE INFILL
00: -
The present invention discloses an elevation detection alarm device for pile foundation concrete infill, including a base. The top side of the base is bolted with a power box, and a conductive liquid control box is set at the top of the base corresponding to the position of the side of the power box. There is a first valve at the top of one side of the conductive liquid control box, and a third valve at the bottom of one side of the conductive liquid control box. Conductive liquid control box side through the connection of the built-in steel wire rubber tube. There is a one-way valve on the outside of the built-in steel wire rubber tube near the end of the conductive liquid control box, and the outside of the built-in steel wire rubber tube is connected to the upper guide tube from top to bottom. The outer side of the built-in steel wire rubber tube is connected with the upper guide tube and a plurality of lower guide tubes in turn. The invention through the alarm light flashing, while the alarm sound to remind the concrete filling to reach the calibration position, stop filling, so that it can be used to detect the location of the elevation, measurement is convenient and fast, simple structure, low production costs, convenient to promote the implementation.

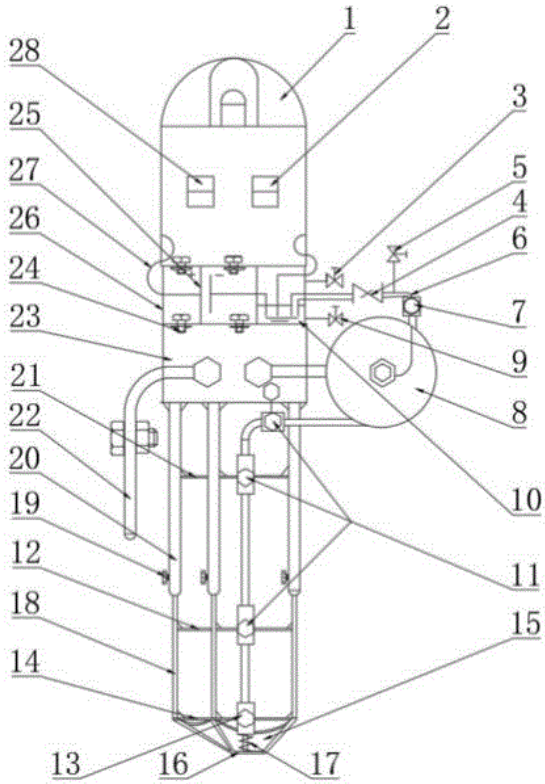

21: 2023/02050. 22: 2023/02/20. 43: 2023/04/26
51: G01M
71: Anhui Polytechnic University, Wuhu Saibao Robotics Industry Technology Research Institute Co
72: Zhuanzhe ZHAO, Yongming LIU, Zhibo LIU, Yuelin LU, Qiang MA, Zhijian TU
54: A SIX-DEGREE-OF-FREEDOM PLATFORM BASED ON RV REDUCER
00: -
This patent discloses a six-degree-of-freedom stage based on an RV reducer, which relates to the field of test stages for RV reducers, including a worktable, a servo motor set on the worktable and connected in sequence, two sets of torque sensors and a magnetic powder actuator, the magnetic powder sensor adding a load, and the torque sensor detecting the input torque. A six-degree-of-freedom platform for producing the same angular offset with the RV reducer is set between the two sets of torque sensors. the RV reducer is set on top of the six-degree-of-freedom platform, and the six-degree-of-freedom platform is set on the worktable, and the output shaft of the servo motor drives the rotation of the RV reducer. By changing the test platform to a six-degree-of-freedom platform, this patent avoids the phenomenon of offset grinding of the RV

reducer, improves the testing accuracy of the RV reducer, and extends the service life of the RV reducer. The adjustment of the six-degree-of-freedom platform is controlled by the control switch inside the upper support table, which reduces the problem of manual intervention and lowers labor costs.

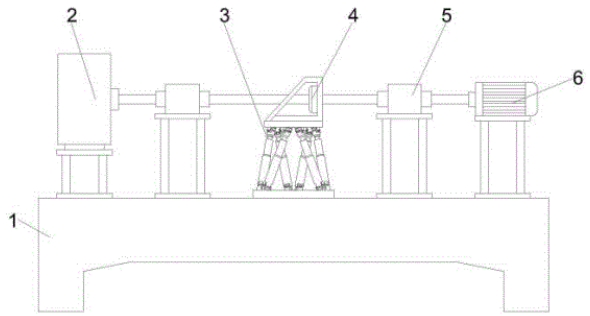

21: 2023/02051. 22: 2023/02/20. 43: 2023/04/26
51: B29C
71: Anhui Polytechnic University, Wuhu Saibao Robotics Industry Technology Research Institute Co
72: Yujie DING, Yiming ZHAO, Yongming LIU, Zhuanzhe ZHAO, Zhibo LIU, Yuelin LU, Zhijian TU
54: A 3D PRINTING HOLDER THAT FACILITATES THE SEPARATION OF THE HOLDER FROM THE PRINTED PRODUCT
00: -
The present invention discloses a 3D printing support that facilitates separation of the support from the printed product, comprising a spring printing support support body. The body of the spring printing support bracket is a spiral structure, a baffle is provided on the body of the spring printing support bracket, a sealing box is provided at the periphery of the body of the spring printing support bracket, and a pull-out bottom plate is provided at the bottom of the sealing box. This invention uses the above structure of a 3D printing bracket to facilitate the separation of the bracket and the printed product, the structure is reasonably designed, through the spiral spring printing support bracket body to support the spring printing material, which can offset the influence of the spring material's own gravity, so that the printed parts to achieve the corresponding precision requirements of the purpose; bracket body heating volatile collection can be repeatedly used, low cost, and easy to bracket body It is easy to separate from the printed product and has high production efficiency.

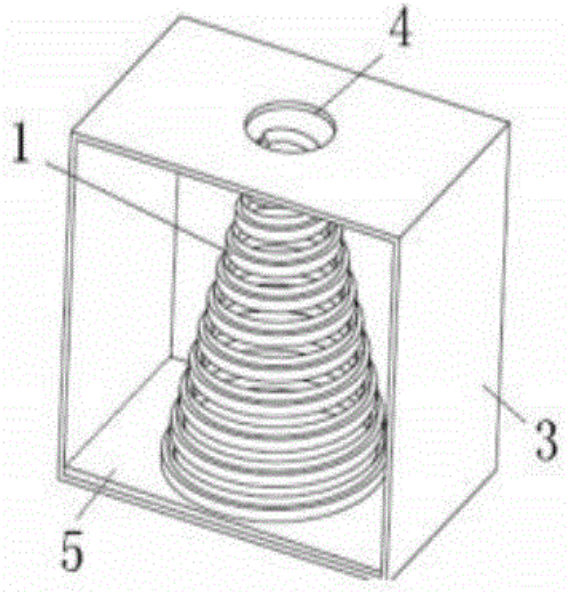

21: 2023/02052. 22: 2023/02/20. 43: 2023/04/26
51: G01M
71: Anhui Polytechnic University, Wuhu Saibao Robotics Industry Technology Research Institute Co.
72: Yongming LIU, Zhuanzhe ZHAO, Yuelin LU, Zhibo LIU, Zhijian TU, Qiang MA
33: CN 31: 202221247643.2 32: 2022-05-23
54: A KIND OF REDUCER TEST PLATFORM
00: -
This patent discloses a reducer test platform with a multi-degree-of-freedom adjustment mechanism. It includes a plurality of stepper motors, and the spindle axes of the stepper motors all form an angle with the plumb line, forming the prism of a positive prism with a small upper and a large lower. The load-bearing platform is provided with a moving table. The spindle of the stepper motor extends from the top of the stepper motor, and its end is connected to the bottom surface of the support frame through the upper connecting mechanism. The rear face of the stepper motor is mounted on the mobile worktable through the lower connecting mechanism. The above technical solution is adopted to realize multi-degree of freedom accuracy testing of RV reducer, which can be micro-adjusted in multiple directions, avoiding the phenomenon of bias grinding during RV reducer testing, improving the testing accuracy of RV reducer, and realizing

adjustment automation and reducing labor cost by adjusting with multiple stepper motors.

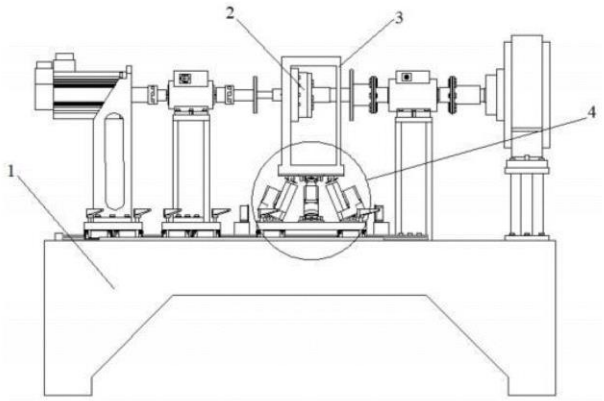

21: 2023/02054. 22: 2023/02/20. 43: 2023/04/26
51: F26B
71: Qinghai Minzu University
72: WANG Jiuli, LIU Jing
54: CHEMICAL REAGENT DRYING DEVICE FOR CHEMICAL EXPERIMENT
00: -
The invention discloses a chemical reagent drying device for chemical experiment, which comprises a device body, wherein the top of the device body is provided with a plurality of ordinary storage chambers at equal intervals; the bottom of the device body is provided with a plurality of sealed storage chambers at equal intervals, and the sealed storage chamber is located at the bottom of the ordinary storage chamber; a ventilation mechanism is arranged between the ordinary storage chambers and the side wall of the device body; an air suction mechanism is arranged between the sealed storage chambers and the inner wall of the device body; and the air suction mechanism comprises a first air pump which is respectively communicated with the inner wall of the device body and the sealed storage chambers. According to the invention, two storage mechanisms are provided by arranging an ordinary storage chamber and a sealed storage chamber, wherein the ordinary storage chamber is used for storing chemical reagents which can be stored in a normal environment, and the sealed storage chamber is used for storing chemical reagents which can be stored in a sealed environment. At the same time, by setting the ventilation mechanism in the ordinary storage chamber, the storage effect in the ordinary storage chamber is increased.

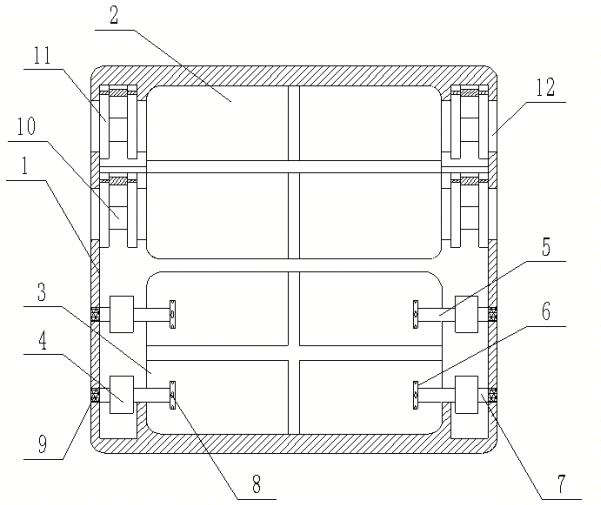

21: 2023/02055. 22: 2023/02/20. 43: 2023/04/26
51: B28B
71: China Railway Third Group No.2 Engineering Co., Ltd., China Railway Third Bureau Group Co., Ltd.
72: Zhang Yuanzheng, Liu Jie, Cao Tao, Zhang Ningjun, Zhang Chao, Cui Yanbin, Wang Jianfeng, Geng Zhongkun, Feng Jinxing
54: A PRECAST METHOD COMBINING LONG-LINE AND SHORT-LINE FOR SEGMENTAL ERECTION CONTINUOUS BEAM
00: -
The invention belongs to the technical field of bridge construction, in particular to a precast method combining long-line and short-line for segmental erection continuous beam. The specific construction steps are: S1: precast the common 0# segment at one end of the precast pedestal; S2: precast a side-span side segment at the other end of the precast pedestal; S3: the side-span side segment is used as a matching segment to precast the adjacent segment; S4: sequentially match and precast from the middle segment to the 2# segment; S5: adopt 2# segment as the matching segment at one end, and at the other end hoist the common 0# segment to the beam adjusting trolley and adjust it to the matching position; S6: precast 1# segment; S7: hoisted and stored the precast segments sequentially, and cast the mid-span side segments; S8: sequentially cast from the middle segment to the 2#' segment; S9: adopt 2#' section as the matching section at one end, and at the other end hoist the common 0# section on the beam adjusting trolley to adjust to the matching position, and cast 1#' segment; S10: hoisted and stored the precast

segments sequentially, and repeat the above steps to precast the next T-structure segment.

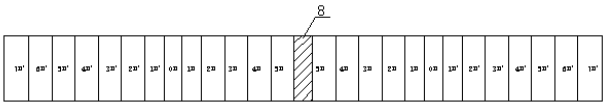

21: 2023/02056. 22: 2023/02/20. 43: 2023/04/26
51: A01K
71: Gansu Institute of Animal and Veterinary Science
72: SHI Fuyue, LUO Yan, CHEN Hao, WANG Yanyan, GAO Bo, WANG Jin, HE Maochang, LIU Ruisheng, FENG Lingxia, YANG Junxiang, DONG He
54: PROTECTIVE DEVICE FOR KIDDING
00: -
The present invention relates to the technical field of kidding, and in particular to a protective device for kidding. The protective device includes a kidding room having an opening door, where partition plates arranged at intervals are fixedly connected to a bottom end of the kidding room, top ends of the partition plates are arranged in an arc shape, baffles are slidably arranged at gaps at the partition plates, the baffles can ascend to be flush with lower portions of top end arc surfaces of the partition plates, and the baffles can move downwards to be separated from the gaps at the partition plates. According to the present invention, the partition plates arranged at intervals are fixedly connected to the bottom end of the kidding room, the baffles are slidably arranged at the gaps at the partition plates, since the top ends of the partition plates are in the arc shape and goat manure is spherical, the manure produced by a she-goat will roll on the baffles. Moreover, an arc-shaped vertical height is small, and the arc surfaces are formed, such that kids will not be pressed, then the baffles move downwards, the baffles will be inclined under a shielding effect of one sides of connecting rods in a descending process of the baffles, and the goat manure is discharged.

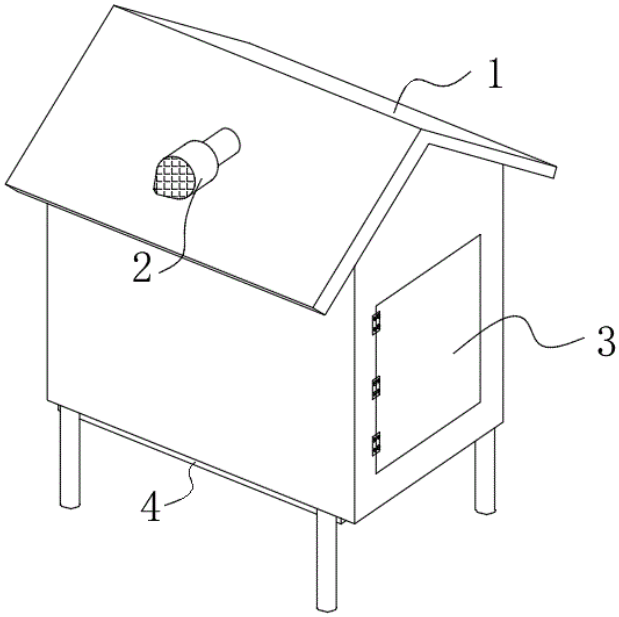

21: 2023/02057. 22: 2023/02/20. 43: 2023/04/13
51: B60F
71: HUZHOU INSTITUTE OF ZHEJIANG UNIVERSITY
72: JI, DAXIONG
33: CN 31: 202211286079.X 32: 2022-10-20
54: WATER-AND-AIR ROBOT WITH INTEGRATED PROPULSION DEVICE
00: -
The present disclosure discloses a water-and-air robot with an integrated propulsion device, including a body, an integrated propulsion device, a buoyancy adjusting module, a core navigation system, an energy supply system, and a watertight charging port and a detection sensor on the body; the integrated propulsion device is installed on the body; the buoyancy adjusting module is installed in permeable cavities of a fore body and an aft body of the water-and-air robot; the core navigation system is installed in the body to calculate and obtain control commands required by the water-and-air robot, and send the control commands to the integrated propulsion device and the buoyancy adjusting module in real time; the detection sensor is used for detecting external environment and obstacles; the energy supply system is used for supplying electric power required by each module, component and equipment in the body, and is connected to the core navigation system, the buoyancy adjusting module and the integrated propulsion device through cables; and the core navigation system is connected to the

integrated propulsion device, the buoyancy adjusting module, and a wireless communication module through watertight cables respectively to implement sending commands and receiving data.

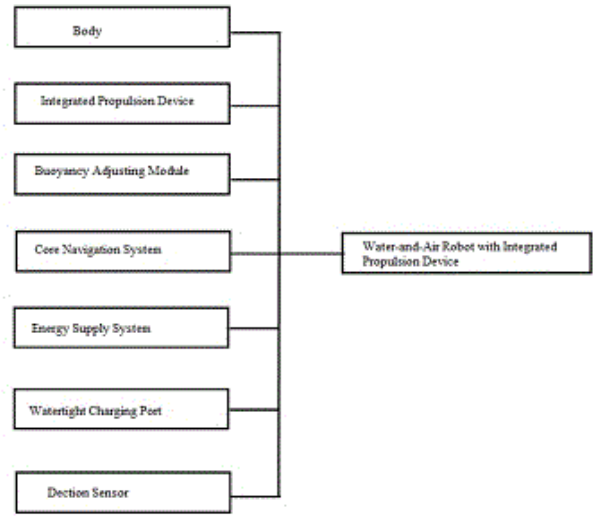

21: 2023/02058. 22: 2023/02/20. 43: 2023/04/17
51: C30B
71: INSTITUTE OF GEOCHEMISTRY CHINESE ACADEMY OF SCIENCES
72: HU, HAIYING, DAI, LIDONG
33: CN 31: 202211349999.1 32: 2022-10-31
54: METHOD FOR PREPARING INDUSTRIAL-GRADE VANADIUM-DOPED UNHYDROUS SINGLE-CRYSTAL NOBLE SPINEL
00: -
A method for preparing industrial-grade vanadium-doped unhydrous single-crystal noble spinel comprises: preparing a noble spinel powder sample using solid basic magnesium carbonate powder, solid aluminum isopropoxide powder, solid vanadium (III)-2,4-pentanedionate powder, solid oxalic acid powder and liquid dilute nitric acid as starting materials according to noble spinel stoichiometry, cold-pressing the noble spinel powder sample into sample discs which are then stacked in a graphite crucible from bottom to top, and placing the graphite crucible in a high-temperature oxygen atmosphere furnace for high-temperature calcination to prepare a cylindrical noble spinel sample; and enabling the cylindrical noble spinel sample to undergo high-temperature and high-pressure reaction to obtain single-crystal noble spinel. The present invention solves the technical problem that techniques for preparing industrial-grade, vanadium-doped and large-grained unhydrous single-crystal noble spinel under a high-temperature and high-pressure condition are not available at present.

21: 2023/02059. 22: 2023/02/20. 43: 2023/04/17
51: C30B
71: INSTITUTE OF GEOCHEMISTRY CHINESE ACADEMY OF SCIENCES
72: HU, HAIYING, DAI, LIDONG
33: CN 31: 202211350007.7 32: 2022-10-31
54: METHOD FOR PREPARING TITANIUM-DOPED UNHYDROUS SINGLE-CRYSTAL HERCYNITE UNDER HIGH-TEMPERATURE AND HIGH-PRESSURE CONDITION
00: -
A method for preparing titanium-doped unhydrous single-crystal hercynite under a high-temperature and high-pressure condition comprises: preparing a hercynite powder sample using solid transparent-semitransparent trigonal ferrous carbonate crystals, solid aluminum isopropoxide powder, solid oxalic acid powder, liquid titanium tert-butoxide and liquid dilute nitric acid as starting materials according to hercynite stoichiometry; using the hercynite powder sample to prepare sample discs, stacking the sample discs in a graphite crucible from bottom to top, placing the graphite crucible in a high-temperature oxygen atmosphere furnace for high-temperature calcination, and quenching to obtain a glassy-state hercynite sample; and grinding the glassy-state hercynite sample into powder which is then cold-pressed into a cylindrical sample, packaging the cylindrical sample in a graphite tube, and then placing it in a high-temperature and high-pressure apparatus for high-temperature and high-pressure reaction to obtain titanium-doped unhydrous single-crystal hercynite. The present invention solves the technical problem that hercynite samples prepared through existing techniques cannot meet the requirements for micron-sized or even larger experimental mineral samples for high-temperature and high-pressure experiment-based mineralogical study.

21: 2023/02063. 22: 2023/02/20. 43: 2023/04/26
51: E02D
71: Chongqing College of Electronic Engineering
72: Yu Peng, Yan Liao, Xu Wang, Tian Wang, Yu Liu, Liang Qi

54: A SIDE CANTILEVER-TYPED ANTI-SLIDE PILE REINFORCING STRUCTURE
00: -
The invention discloses a side cantilever type anti-slide pile reinforcement structure belonging to the technical field of highway slope protection. It comprises a road surface, one end of the road surface above is provided with an anti-slide pile body, the other end of the road surface above is provided with a reinforcement component, one side of the anti-slide pile body is provided with a slope, the anti-slide pile body is provided with a protective component. A lighting component is arranged above one side of the anti-slide pile body. The invention provides protection components and protects the Rolling Stones sliding down the slope through the protective guardrail, so that the device is convenient to protect the upper part of the structure and prevent the Rolling Stones from sliding down on the road surface and affecting traffic. The invention generates electricity for the lamp through a lighting assembly and a solar panel, and then illuminates around the anti-slide pile body, so that the device is convenient to light the surrounding environment and improve the surrounding security when it is used.

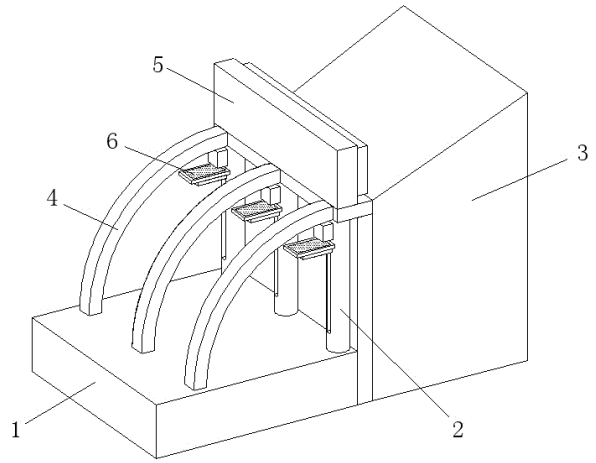

21: 2023/02064. 22: 2023/02/20. 43: 2023/04/26
51: A61K
71: Dr. Koena Mukherjee, Dr. Koel Mukherjee
72: Dr. Koena Mukherjee, Dr. Koel Mukherjee
54: A SYSTEM FOR DEVELOPMENT OF A BULLET SHAPED NANOFIBER COATED BIO-ROBOT FOR TARGETED DRUG DELIVERY
00: -
A system (100) for developing and analyzing bullet shaped nanofiber coated bio-robot for targeted drug delivery, comprises of: a clutch (102) comprising of a micro spring (102a) coils and uncoils based on rotation of a motor (102b) to open and close the clutch (102) for movement of the bio-robot; a drug delivery device (104) for preparing the nanofiber solution to encapsulate the clutch (102), wherein the nanofiber is prepared by mixing natural polymer (plant-based cellulose), drug molecule and FA solution; a spinneret (106) connected to the drug delivery device (104) for dispensing the nanofiber solution at a constant and controlled rate through into a high voltage electrical field, wherein the high voltage electrical field is generated between end of a needle and a collector; and a grounded plate (108) associated with the spinneret (106) for collecting the dispensed nanofiber to implanted them on surface of the bio-robot.

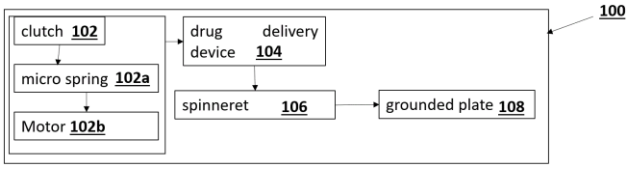

21: 2023/02065. 22: 2023/02/20. 43: 2023/04/26
51: G06Q
71: Dr. Vivek, Abinash Sahoo, Dr. Sandeep Samantaray, Chinmayee Biswakalyani, Dr. Deba Prakash Satapathy
72: Dr. Vivek, Abinash Sahoo, Dr. Sandeep Samantaray, Chinmayee Biswakalyani, Dr. Deba Prakash Satapathy
54: A SYSTEM AND METHOD TO PREDICT SURFACE RUNOFF BY SUPPORT VECTOR MACHINE- SALP SWARM APPROACH
00: -
A system (100) and a method (200) for predicting surface runoff by support vector machine based salp swarm approach (SVM-SSA), wherein the system (100) comprises of: a data collection module (102) for collecting a plurality of weather data of an area from a source; a prediction module (104) for predicting surface run off in an area based on processing the plurality of weather data collected by the SVM-SSA prediction technique, wherein the SVM-SSA prediction technique comprises of: a support vector machine (SVM) module (106) for computing optimal parameters, which comprises of: a first initialization module (106a); and a training

module (106b); a SSA module (108) for obtaining an optimum result to the training module (106b) to training the SVM module (106), which comprises of: a second initialization module (108a); a calculation module (108b); and an updating module (108c).

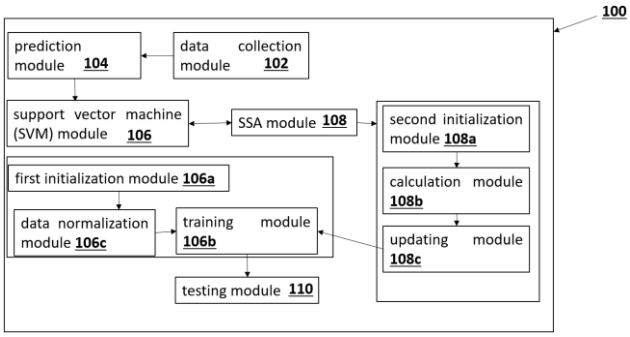

21: 2023/02066. 22: 2023/02/20. 43: 2023/04/26
51: G06F
71: Rumi Iqbal Doewes, Gunathevan Elumalai, Siti Hartini Azmi
72: Rumi Iqbal Doewes, Gunathevan Elumalai, Siti Hartini Azmi

54: AN ATHLETE TRACKING SYSTEM

00: -

An athlete tracking system (100) comprises of: an image capturing module (102) positioned above a race track for capturing image of the race track; an input module (104) for selecting a plurality of parameters as input for calculating position of the athlete in the race track; a selection module (106) for selecting a source point, a destination point, placement of the cone and an athlete position for monitoring based on the captured image; and an evaluation module (108) interconnected to the input module (104) and the selection module for calculating speed, number of routes and distance traveled by the athlete based on the plurality of parameters and selected value.

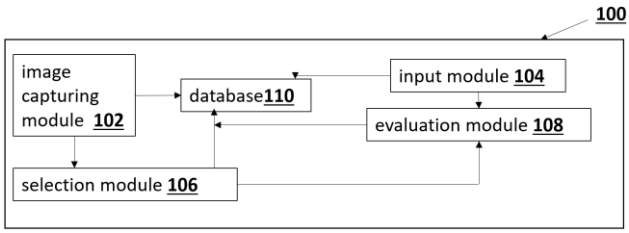

21: 2023/02068. 22: 2023/02/20. 43: 2023/04/26
51: C07C
71: Dr. Punniyakoti Veeraveedu Thanikachalam, Dr. Srinivasan Ramamurthy, Poojitha Mallapu, Dr. Thirumalaikumaran Rathinam, Dr. Senthilkumar Gnanavadivel Prabhakaran, Jubilee Ramasamy, Dr. Prasanna Bharathi Sainath, Dinesh Kumar Settu, Premanand Ranganathan, Gouthami Ammapalli, Dr. Kadhirimangalam Karunakar Karthik, Saranya Balasubramaniyam
72: Dr. Srinivasan Ramamurthy, Poojitha Mallapu, Dr. Punniyakoti Veeraveedu Thanikachalam, Dr. Thirumalaikumaran Rathinam, Dr. Senthilkumar Gnanavadivel Prabhakaran, Jubilee Ramasamy, Dr. Prasanna Bharathi Sainath, Dinesh Kumar Settu, Premanand Ranganathan, Gouthami Ammapalli, Dr. Kadhirimangalam Karunakar Karthik, Saranya Balasubramaniyam

54: A PROCESS FOR PREPARING 5-NITRO-SALICYLIC ACID USING A SIMPLE REACTION VESSEL AND ITS COMPOSITION THEREOF

00: -

The present invention generally relates to a process for preparing 5-nitro-salicylic acid using a simple reaction vessel comprises taking 1-5 grams of Salicylic acid in a dry round bottom flask (RBF) and adding 2-10 milliliters of concentrated nitric acid (HNO3) dropwise with swirling; adding 2-10 milliliters of concentrated sulfuric acid (H2SO4) dropwise to the solution; refluxing the solution until the oxides of nitrogen cease; cooling the content of the reaction mixture at room temperature, and transferring the reaction mixture to a beaker containing 150 ml ice-cold water with stirring; and filtering off the yellow solid and wash with enough water thereby drying in the hot air oven.

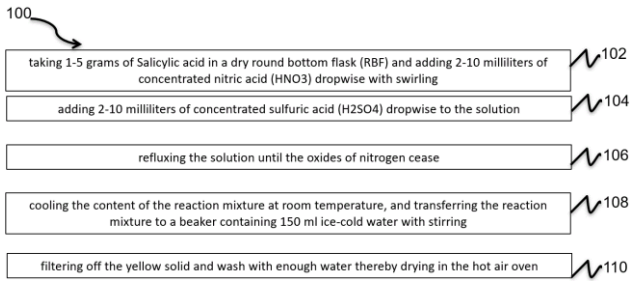

21: 2023/02069. 22: 2023/02/20. 43: 2023/04/26
51: C04B
71: N. Subash, Dr. S. Adishkumar
72: N. Subash, Dr. S. Adishkumar

54: A COMPOSITION AND A METHOD FOR PREPARING A GEOPOLYMER CONCRETE MIX DESIGN

00: -

A composition and a method for Preparing a Geopolymer Concrete Mix Design, wherein the method comprises of: diluting 55-60 kg/m3 of

sodium hydroxide pellets to prepare 180–260 kg/m3 alkaline 10 M solution; mixing a plurality of powder with the alkaline solution at a ratio of 0.4-0.6 to obtain a geopolymer binder of varying grades, wherein the geopolymer binder is obtained by curing at 20-30oC for 7-28 days; and adding 700-800 kg/m3 of fine aggregate, 1100-1200 kg/m3 of coarse aggregate, and 165-170 kg/m3 of sodium silicate separately to the geopolymer binder to obtain the geopolymer concrete mix.

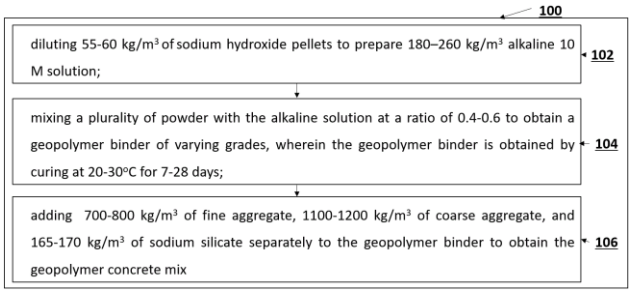

21: 2023/02070. 22: 2023/02/20. 43: 2023/04/26
51: B01J
71: SINGH, Jitesh Kumar, ROUT, Arun Kumar, KANHED, Satish Mohan
72: SINGH, Jitesh Kumar, ROUT, Arun Kumar, KANHED, Satish Mohan

54: AN EXTRACTION PROCESS OF BORASSUS FLABELLIFER L. LEAF FINE FIBER

00: -

The present invention relates to an extraction process of Borassus flabellifer L .leaf fine fiber. The Borassus flabellifer L. leaf was washed with tap water to remove the dirt and impurities and then dried in a shade area for two days and deep in a water tub for five days. After removal from the tub, the leaf strips were dried in the sunlight for one day and then dried in the shade for a week. After that, the dried leaf strips were immersed in a steel tub of water at 100oC for 5 h, cooled slowly at room temperature and left for ten days for water retting to remove the outer skin and impurities of fibers. The removed fibers were cleaned in tap water, dried at room temperature for two days. The extracted fibers were dried in an airovenat 70° C for 2 h to remove the moisture. The extracted and dried fibers were divided into two groups namely (a) Coarse fibers and (b) fine fibers. The average diameter of coarse fibers was 4.5 mm while the fine fiber was 2.4mm.

21: 2023/02098. 22: 2023/02/21. 43: 2023/05/09
51: G01V; G06F
71: Central South University
72: Zhenwei GUO, Chunming LIU, Bochen WANG, Dawei GAO, Chuanghua CAO, Yanyi WANG, Xinrong HOU, Yijie CHEN, Chaofan DENG

54: A TWO-DIMENSIONAL ELECTRICAL PROSPECTING METHOD

00: -

The invention discloses a two-dimensional electrical prospecting method which includes the following steps: S1, obtain the original data of the conventional pole-dipole array; S2, calculate the average value of the pole-dipole array electrical parameters and the absolute value of the difference according to the formula; S3, draw the curve of all electrical parameters; S4, decrypt the electrical parameter curve comprehensively; S5, determine the distribution range of geological anomalous bodies. The invention adopts the above-mentioned two-dimensional electrical prospecting method to improve the electrical prospecting effect and accuracy of the pole-dipole array method and enhance the recognition of geological anomalous bodies.

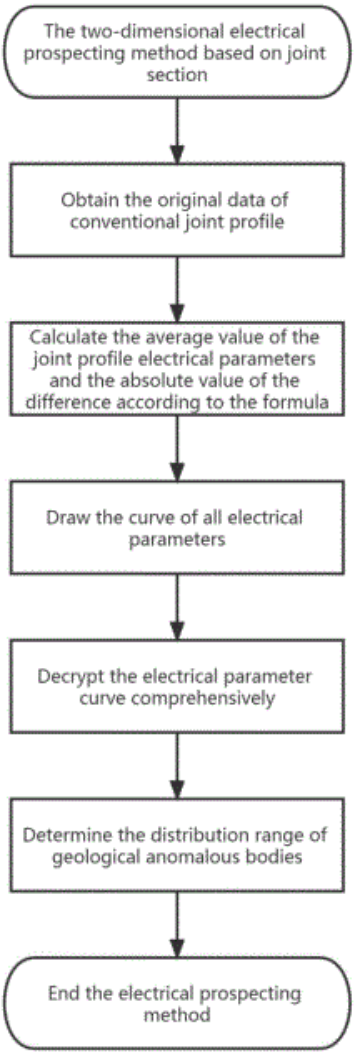

21: 2023/02099. 22: 2023/02/21. 43: 2023/05/09
51: G01V
71: Central South University
72: Zhenwei GUO, Chunming LIU, Bochen WANG, Dawei GAO, Chuanghua CAO, Yanyi WANG, Xinrong HOU, Yijie CHEN, Chaofan DENG
54: A THREE-DIMENSIONAL ELECTRICAL PROSPECTING METHOD
00: -
The invention discloses a three-dimensional electrical prospecting method, the steps of which are: S1, obtain the original electrical data of the conventional joint section, and select the recording point with electrical anomalous as the common point; S2, carry out the pole-dipole array measurement on other lines through the common point; S3, use the formula to process the joint section electrical data in several directions; S4, draw the electrical data curves of different measuring lines and different recording points; S5, estimate the three-dimensional characteristics of geological anomalous bodies comprehensively combined with the electrical anomalous map of all recording points. The invention adopts the above three-dimensional electrical prospecting method, which improves the electrical prospecting effect and accuracy of the combined section and enhances the prospecting accuracy of the plane distribution range of the anomalous body.

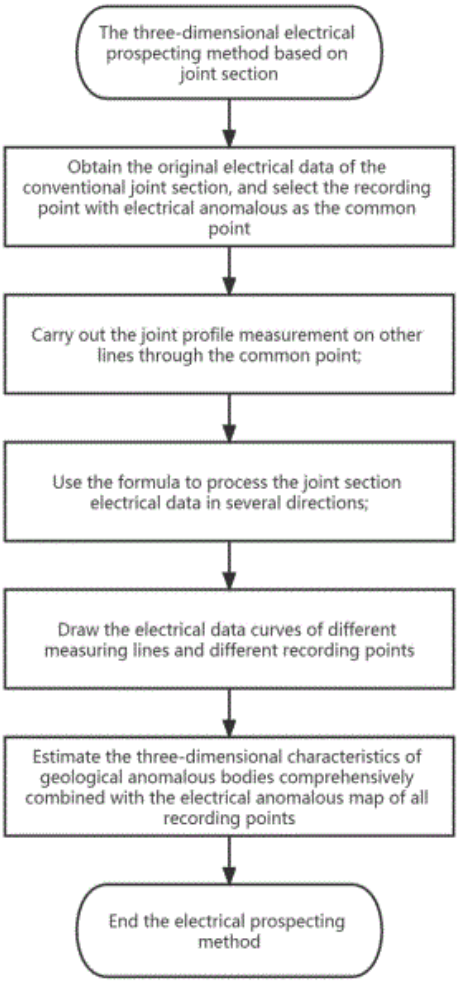

21: 2023/02100. 22: 2023/02/21. 43: 2023/05/09
51: A61K
71: The Second Affiliated Hospital of Shandong First Medical University
72: SUN, Ying, QI, Yan
54: TRADITIONAL CHINESE MEDICINE COMPOSITION FOR TREATING PRURITIC DISEASE AND APPLICATION THEREOF

00: -
The present invention provides a traditional Chinese medicine composition for treating pruritic disease and application thereof, which belongs to the technical field of traditional Chinese medicine compositions. The traditional Chinese medicine composition provided by the present invention includes the following, parts by weight, components: 45-60 parts of white muscardine silkworm, 40-60 parts of radix rehmanniae, 20-35 parts of angelicae sinensis, 16-30 parts of peach kernel, 20-30 parts of tribulus terrestris, 10-20 parts of spina gleditsiae, 8-16 parts of rhizoma atractylodis, 10-15 parts of radix scrophulariae and 6-20 parts of radix glycyrrhizae. The present invention has reasonable compatibility of medicines, and can enhance effects of dispelling wind and arresting itching, nourishing yin and blood, promoting blood circulation to remove blood stasis, and clearing heat and eliminating dampness; the whole prescription is scientifically compatible.

21: 2023/02101. 22: 2023/02/21. 43: 2023/05/09
51: C01B
71: INSTITUTE OF APPLIED CHEMISTRY, JIANGXI ACADEMY OF SCIENCES
72: XU, Jianguo
54: METHOD FOR PREPARING HIGH-SPECIFIC-SURFACE-AREA SULFUR-DOPED CARBON MATERIAL FROM POTASSIUM 3-SULPHONATOPROPYL ACRYLATE
00: -
Provided is a method for preparing a high-specific-surface-area sulfur-doped carbon material from potassium 3-sulphonatopropyl acrylate. Carbonization treatment of potassium 3-sulphonatopropyl acrylate is performed at a high temperature, in-situ activation effect is achieved by using the potassium element contained in the carbon material, no activating agent is needed, and a developed porous structure is formed through one-step reaction; meanwhile, sulfur doping of the carbon material is realized by utilizing the sulfur element contained in potassium 3-sulphonatopropyl acrylate. The preparation method provided by the present invention greatly simplifies the traditional carbonization-activation preparation process of porous carbon materials, avoids the use of an activator, and completes the processes of carbonization, activation and doping through one-step reaction; meanwhile, the prepared sulfur-doped carbon material has a high specific surface area and a high porosity, and shows a good characteristic of adsorbing carbon dioxide.

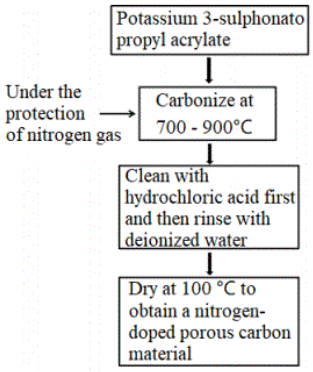

21: 2023/02102. 22: 2023/02/21. 43: 2023/05/09
51: C01B
71: JIANGXI ACADEMY OF SCIENCES
72: LIU, Yuewei
54: METHOD FOR PREPARING HIGH-SPECIFIC-SURFACE-AREA NITROGEN-DOPED CARBON MATERIAL FROM POTASSIUM PHTHALIMIDE
00: -
Disclosed is a method for preparing a high-specific-surface-area nitrogen-doped carbon material from potassium phthalimide. The method includes the following steps: carbonizing potassium phthalimide at a high temperature, adding hydrochloric acid into an obtained carbonized product for treatment, washing a product obtained after acid pickling repeatedly with deionized water, and drying to obtain a nitrogen-doped porous carbon material. In-situ activation effect is achieved by using the potassium element contained in the carbon material, no activating agent is needed, a developed porous structure is formed through one-step reaction, and the specific surface area of the carbon material can reach 2000 m2/g or above; meanwhile, nitrogen doping of the carbon material is realized by utilizing the nitrogen element contained in potassium phthalimide; the prepared nitrogen-doped carbon material has a high specific surface area and a high porosity, and shows a good characteristic of adsorbing carbon dioxide.

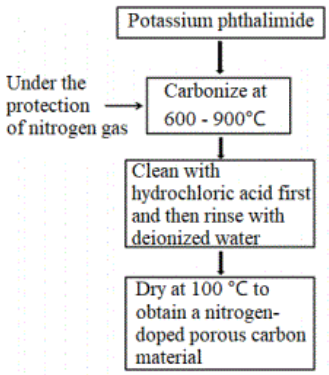

21: 2023/02103. 22: 2023/02/21. 43: 2023/05/09
51: C01B; B82Y
71: INSTITUTE OF APPLIED CHEMISTRY, JIANGXI ACADEMY OF SCIENCES
72: SHI, Jinsong
54: METHOD FOR PREPARING NITROGEN-DOPED CARBON NANOSPHERE WITH ULTRAHIGH SPECIFIC SURFACE AREA
00: -
Provided is a method for preparing a nitrogen-doped carbon nanosphere with an ultrahigh specific surface area. The method includes the process that 3-aminophenol reacts with a formaldehyde solution to prepare spherical polymeric nanoparticles, and carbonizing is performed to obtain a spherical carbon precursor. After the spherical carbon precursor is activated by potassium bicarbonate, a monodisperse carbon nanosphere with regular spherical structural characteristics can be prepared, and its specific surface area can reach up to 3096 m2/g. Meanwhile, nitrogen doping is successfully realized in the carbon nanosphere by utilizing the nitrogen element contained in 3-aminophenol. The prepared carbon nanosphere material can be used for carbon capture research. Due to the nitrogen doping and porous characteristics, the adsorption capacity reaches up to 31.4 mmol/g under the conditions of 0 degree Celsius and 20 bar, and the carbon nanosphere material shows an extremely excellent carbon dioxide adsorption performance.

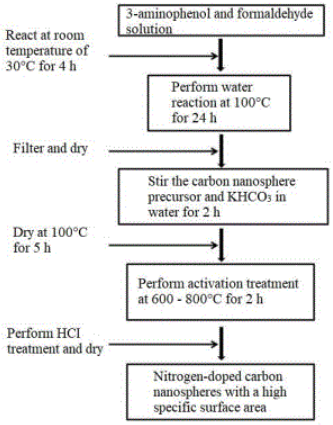

21: 2023/02104. 22: 2023/02/21. 43: 2023/05/09
51: A61B; A61N
71: Shanghai University of Medicine and Health Sciences
72: SHA, Shuang, LI, Hongsong, QI, Jiaqi, WANG, Jiawen
54: HEMOSTATIC DEVICE
00: -
Disclosed is a hemostatic device, which relates to the technical field of medical apparatuses and instruments. The hemostatic device includes an inflatable ball and a hemostatic bandage, where the inflatable ball is connected with the hemostatic bandage, and the hemostatic bandage is bound at a wound of an arm to be hemostatic. When the wound of the arm is bleeding, the inflatable ball is pressed to inflate air into the hemostatic bandage to make the hemostatic bandage expand, so as to stop the wound of the arm from bleeding by means of compressing. The present invention uses the inflatable ball to inflate, realizes quantitative portable hemostasis, and facilitates timely hemostasis.

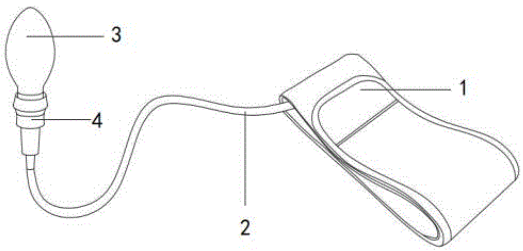

21: 2023/02105. 22: 2023/02/21. 43: 2023/05/09
51: D06M
71: Yancheng Polytechnic College
72: ZHOU Hongtao, SONG Qiuxia, ZHOU Bin, WANG ke, WANG Shudong

54: PREPARATION METHOD AND PREPARATION DEVICE OF FLAME-RETARDANT FABRIC

00: -

The invention disclose a preparation method and a preparation device of flame-retardant fabric, which comprise a casing, wherein an unwinding mechanism, a dust removal mechanism, a guide roller, a soaking mechanism, a pressing mechanism, a drying mechanism and a winding mechanism are sequentially arranged in an inner cavity of that casing from left to right; the dust removal mechanism comprises a through hole arranged at the rear side of the inner wall surface of the casing, and the top and bottom of the inner wall surface of the through hole are horizontally and fixedly connected with a first fixing plate; according to the invention, through the cooperative use of the fan, the air duct and the dust suction bucket, the upper surface and the lower surface of the fabric can be synchronously vacuumized, and the filter screen is used for filtering, so that the fan is prevented from being blocked by impurities such as dust, and at the same time, the baffle is locked by the L-shaped lock catch, so that the disassembly and assembly operation of the filter screen is simple and convenient, and the disassembly efficiency is further improved; the leveler roller is used to press the rolled fabric, which effectively ensures the tightness of fabric rolling, and the limit ring is used to limit the rolled fabric, which effectively ensures the neatness of fabric rolling.

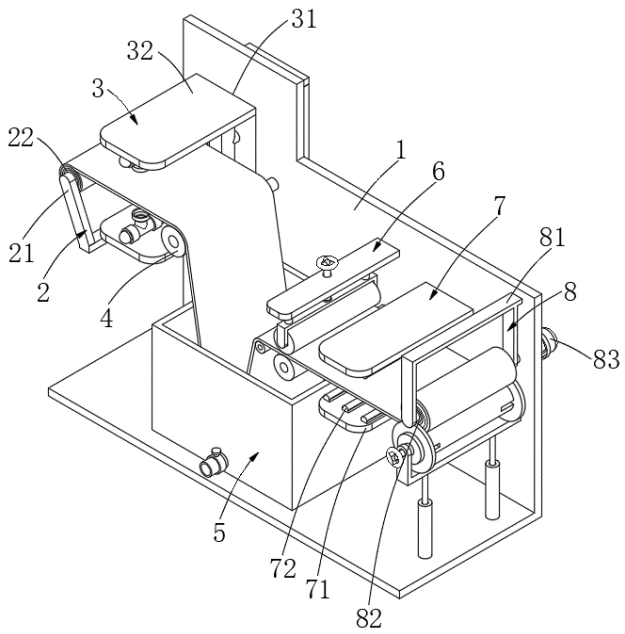

21: 2023/02106. 22: 2023/02/21. 43: 2023/05/09
51: B25J
71: China University of Mining and Technology
72: Xinhua Liu, Peng Qi, Dezheng Hua, Baiyi Wang, Xiaoqiang Guo, Yurui Shen, Lai Peng, Congmin Fang, Qiyu Wang, Zhengguang Liu
33: CN 31: 202211225768.X 32: 2022-10-09

54: A GRASPING CONTROL METHOD OF MINE BELT CONVEYOR BASED ON VISUAL POSITIONING

00: -

The present invention discloses a method for controlling the gripping of a mining belt conveyor robotic arm based on visual positioning, including a drill pipe loading and unloading robotic arm, an acceleration sensor, a drill pipe library, an RGBD binocular camera and a data processing center; the beneficial effects of the present invention are: the collected visual images are imported into a MAE-based neural network, and the MAE automatic masking mechanism makes the whole neural network pay more attention to the overall information. The image enhancement effect is realized to achieve accurate identification and positioning of the drill pipe in complex backgrounds including floating and sinking fog; by inputting the robot arm grasping information from the acceleration sensor on the robot arm and the position information from the MAE-based neural network into the GRU-based neural network, the displacement and attitude are adaptively adjusted according to each robot arm

grasping situation, so that the robot arm can always maintain good accuracy in long-term work. This enables the robot arm to maintain good accuracy and improve efficiency in long-term operation.

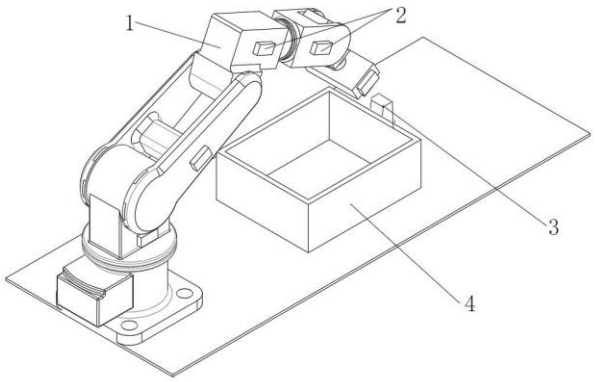

21: 2023/02107. 22: 2023/02/21. 43: 2023/05/09
51: A01G; E02B
71: Huzhou Vocational and Technical College, Zhejiang Yongda Electric Power Industry Co., LTD
72: JIANG Xinying, SHEN Zhilong, CHEN Renbing, NI Jianxin, CHEN Jing, GAO Lixin, XU Xueyong, WU Zeli
54: ECOLOGICAL REVETMENT COMPONENT SUITABLE FOR WATER ENVIRONMENT MANAGEMENT IN SMALL WATERSHEDS
00: -
The invention discloses an ecological revetment component suitable for water environment management in small watersheds, and belongs to the technical field of ecological revetment. The ecological revetment component comprises the following raw materials in parts by mass: 10-30 parts of sludge, 21-33 parts of cementing material, 38-55 parts of regenerated composite powder, 0.1-0.5 part of additive and 15-20 parts of water; the cementing material comprises dead-burned magnesium oxide, potassium dihydrogen phosphate and silicon powder. The cast-in-place vegetation type ecological concrete slope protection prepared by the invention has excellent compressive strength, flexural strength, effective porosity and water and fertilizer retention properties, and can not only well reinforce the river course to prevent soil erosion, but also plant various vegetation on it, so as to reduce the influence of slope protection on the surrounding ecological environment.

21: 2023/02108. 22: 2023/02/21. 43: 2023/05/09
51: A61K
71: Henan Provincial Hospital of Traditional Chinese Medicine (The Second Affiliated Hospital of Henan University of Traditional Chinese Medicine), Zhumadian City Hospital of Traditional Chinese Medicine
72: Hewei QIN, Qinsheng ZHANG, Pingli ZHAO, Changchun HU, Yong MENG, Yanjie LI, Jiandong LIU, Ziyue QIN, Xiaoqin JIN, Lei HAN, Zheng YUAN
54: A CHINESE MEDICINE PILL FOR THE TREATMENT OF RESTENOSIS AFTER STENT IMPLANTATION AND ITS PREPARATION METHOD
00: -
The present invention discloses a Chinese medicine pill for treating restenosis of blood vessels after stent implantation, including main ingredients and auxiliary ingredients, the main ingredients are: Hawthorn 18-30g, Forsythia 12-20g, Pinellia ternata 9-12g, Astragalus 30-45g, Red Paeonia 9-15g, Angelica Sinensis 9-15g, Scorpion 5-9g, Goldenseal 12-15g, Genkoshen 9-15g; auxiliary ingredients are: honey. The preparation method is as follows: S1, the grasped drugs will be dried with civil fire, using the crusher to make the dried drugs into drug powder for use; S2, the honey first boiled with martial fire, and then slowly simmered with civil fire until the honey yellow froth; S3, the drug powder and yellow froth of honey mixed and formed into a dough, rolled into pills, each pill 9g; S4, after the appearance of the pill hardened, wrapped with wax paper, plastic film, plastic bags or wax shell, stored in a cool, dry place. Store in a cool and dry place. The present invention adopts a kind of Chinese medicine pill for treating restenosis after stent implantation, which can significantly reduce the incidence of restenosis after stent implantation and avoid postoperative thrombosis and atherosclerotic plaque.

21: 2023/02109. 22: 2023/02/21. 43: 2023/05/09
51: G01K
71: Lingnan Normal University
72: Jinfang LIU
54: A DIGITAL THERMOMETER BASED ON AT89C51 MICROCONTROLLER CONTROL
00: -
The present invention discloses a digital thermometer controlled by an AT89C51 microcontroller, the control circuit of which includes a central processing circuit, a liquid crystal display circuit, a temperature acquisition circuit and an alarm

circuit. One output of the central processing circuit is connected to the input of the liquid crystal display circuit. Another output of the central processing circuit is connected to an input of the alarm circuit. The output of the temperature acquisition circuit is connected to the input of the central processing circuit. The central processing circuit is an AT89C51 microcontroller.

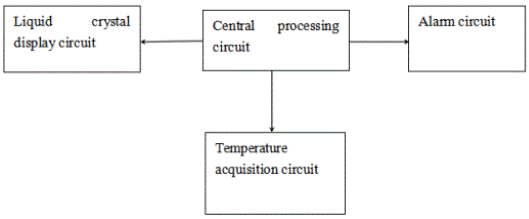

21: 2023/02110. 22: 2023/02/21. 43: 2023/05/09
51: G01N; G06K; G06T
71: Qinghai Minzu University
72: LIU Jing

54: METHOD FOR ARTIFICIALLY SIMULATING SALINE-ALKALI ENVIRONMENT BY USING SALINE-ALKALI GRADIENT

00: -

The invention discloses a method for artificially simulating saline-alkali environment by using saline-alkali gradient, which belongs to the field of artificial simulation and comprises the following steps: acquiring saline-alkali environment images in the same area at different times, wherein the saline-alkali environment images comprise a training image and an image to be measured; Constructing an image recognition model, and training the image recognition model based on a training image to obtain a trained image recognition model; Inputting an image to be detected into a trained image recognition model, and outputting environmental parameters of saline-alkali land, wherein the environmental parameters of saline-alkali land include salinity parameters and alkalinity parameters; The environmental parameters of saline-alkali land are counted, and the saline-alkali gradient is obtained. Based on the saline-alkali gradient, the saline-alkali environment model is obtained by artificial simulation method. By counting the environmental parameters of saline-alkali land output by the model, the saline-alkali gradient is obtained, and the method can comprehensively reflect the environmental change process of saline-alkali land, thus solving the technical problem that the environmental change of saline-alkali land cannot be truly reflected by discrete numerical values in the prior art.

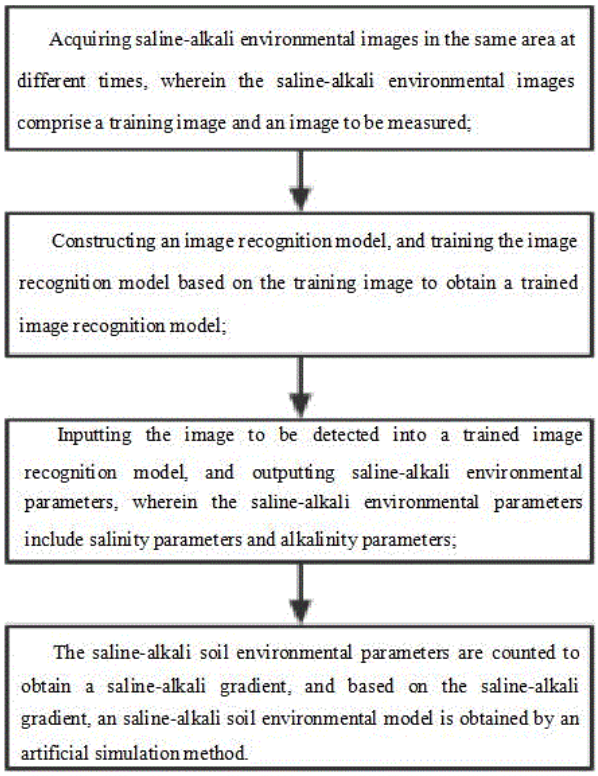

21: 2023/02111. 22: 2023/02/21. 43: 2023/05/09
51: A63B
71: Shenyang University of Technology
72: XU Xiangdong, ZHAO Baishan, SAN Hongli, KANG Jian

54: INTELLIGENT JUDGING DEVICE FOR FIGHTING COMPETITIONS

00: -

The invention discloses an intelligent judging device for fighting competitions. Comprises an airbag combined protective device, a split pressure transmitter device and a data acquisition and evaluation device, and is mainly characterized in that the airbag combined protective device is worn on athletes of both sides of the competition, and the athletes of both sides hit the airbag combined protective device of the other side; after the detected air pressure fluctuation value is processed through the split pressure transmitter device, the hitting data is transmitted to the data acquisition and evaluation

device through a wireless transmission module to judge the outcome, It has the advantages of more decisive and accurate judgment on the result of the competition, avoiding the misjudgment and omission of judgment by manual referees, allowing referees to issue competition instructions off the court, avoiding accidental injury caused by close contact with athletes, quickly judging the result of the competition, and preventing pulling strings from making the competition more just and fair.

21: 2023/02113. 22: 2023/02/21. 43: 2023/05/09
51: G01N
71: CHINA RAILWAY CONSTRUCTION GROUP CO., LTD.
72: ZHAO Yaming, ZHANG Mingfei
54: SYSTEM AND METHOD FOR IDENTIFYING AIRPORT RUNWAY CRACKS BASED ON MACHINE VISION
00: -
The application discloses an airport runway crack identification system and method based on machine vision, wherein the system comprises an image acquisition module, an image preprocessing module, a crack identification module and an interaction module; The image acquisition module is used for acquiring images of the airport runway to obtain an initial image of the airport runway; The image preprocess module is used for preprocess that initial image of the airport runway to obtain a preprocessed image; The crack identification module is use for carrying out crack identification on that preprocess image to obtain a crack area image and crack type information; The interactive module is used to locate the runway crack area based on the crack image and feed back the runway crack area and crack type information to the staff. The application reduces the staff, improves the identification efficiency and improves the detection accuracy from multiple levels.

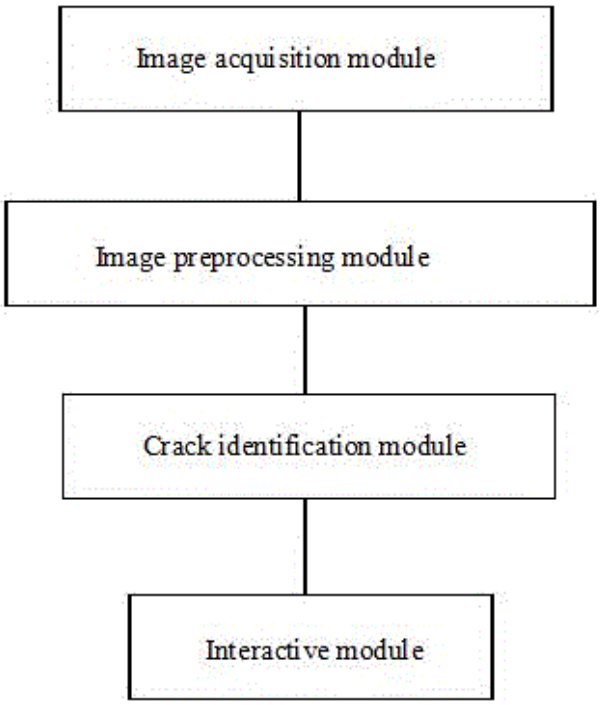

21: 2023/02114. 22: 2023/02/21. 43: 2023/05/09
51: G01N
71: Institute of Environment and Sustainable Development in Agriculture, Chinese Academy of Agricultural Sciences
72: QIN, Xiaobo, WAN, Yunfan, WANG, Bin, LIAO, Yulin, FAN, Meirong
54: METHOD FOR IDENTIFYING HIGH YIELD AND LOW EMISSION OF RICE VARIETY
00: -
The present invention relates to a method for identifying a high yield and low emission of a rice variety. The method includes the step of performing identification on the basis of an effective tiller number of the rice variety, where the low emission refers to a low emission amount of greenhouse gas, and the greenhouse gas is CH4 and/or N2O.

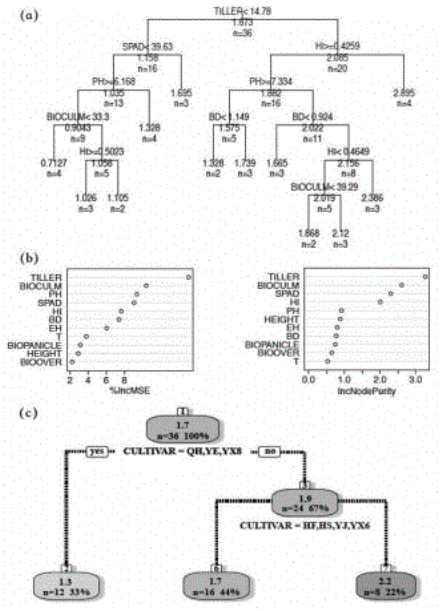

21: 2023/02115. 22: 2023/02/21. 43: 2023/05/09
51: F24H
71: Heilongjiang Institute of Wood Science
72: ZHAO Xiu, SHI Lancui, MENG Xiangpeng, LI Chenqi, PAN Yufeng, WANG Zizhen, ZHANG Yanhong, HUANG Haibing

54: ELECTRIC HEATING DEVICE

00: -

The invention discloses an electric heating device, which comprises a plurality of groups of detachably connected heating module assemblies, wherein each group of heating module assemblies comprises a plurality of groups of geothermal modules which are electrically heated, and the geothermal modules comprise a shell, an electric heating film and an insulation layer are fixedly arranged in the shell, and the electric heating film is arranged on the upper part of the insulation layer; the invention has the advantages of high efficiency of direct electric temperature control, fast response speed, and multiple groups of independent temperature control design, which can largely avoid the temperature gradient difference in the heating module and improve the consistency and uniformity of the overall temperature; moreover, the whole device is convenient to install and disassemble, and the equipment can be removed only by disconnecting the power supply and the signal line, so that the modular design is easy to expand and the number of modules can be conveniently increased.

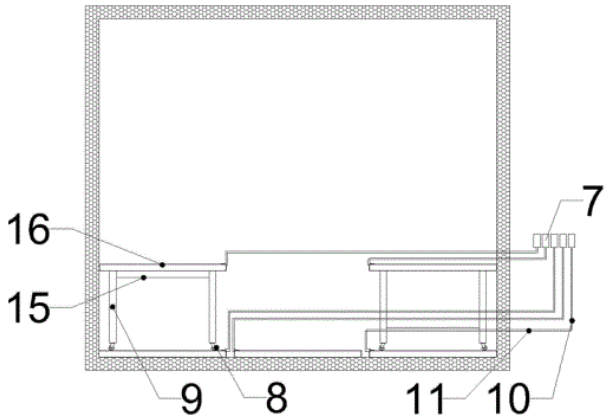

21: 2023/02116. 22: 2023/02/21. 43: 2023/05/09
51: B01D; C01D
71: HENAN UNIVERSITY OF SCIENCE AND TECHNOLOGY
72: LIU Haiyang, XIANG Nan, WANG Wei, ZHANG Qing, LIU Wei, WANG Yaoli

54: METHOD FOR PREPARING ULTRA-HIGH PURITY SODIUM HYDROXIDE REAGENT FROM INDUSTRIAL FLAKE ALKALI BY ELECTRODIALYSIS METHOD

00: -

The invention discloses a method for preparing ultra-high purity sodium hydroxide reagent from industrial flake caustic soda by electrodialysis, which comprises the following steps: dissolving industrial flake caustic soda in water and performing ultrasonic treatment for 5-8min to prepare high-concentration liquid caustic soda; In the invention, the ultra-high purity sodium hydroxide reagent is produced by electrodialysis with industrial flake caustic soda as raw material and ionic membrane as separation membrane. Referring to the production process of ionic membrane electrolysis of sodium chloride solution for industrial production of high purity sodium hydroxide reagent, the method of electrodialysis with industrial flake caustic soda as raw material and ionic membrane as separation membrane is feasible in theory and practice. Compared with the anhydrous ethanol method, this method only releases hydrogen and oxygen, the separation and collection technology and equipment are mature, and the production equipment is small, which increases the safety factor and production efficiency in the production of ultra-high purity sodium hydroxide reagent. At the same time, the waste anode solution can be used to prepare a solvent for high-concentration liquid alkali, ensuring

the green and pollution-free production of the whole process.

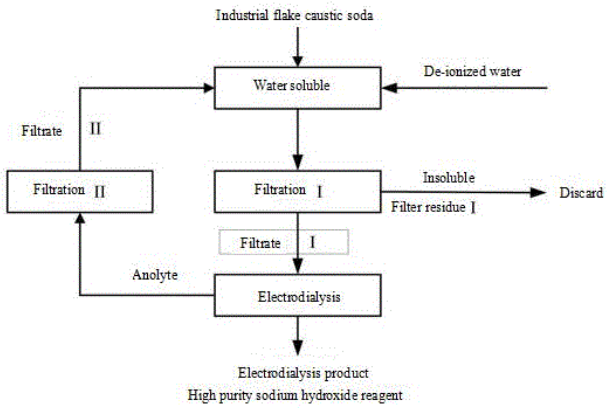

21: 2023/02117. 22: 2023/02/21. 43: 2023/05/09
51: C08J; C08L
71: Hunan Academy of Forestry, Hunan Hi-tech Bio-Agro Co., Ltd, CHANGSHA UNIVERSITY, HUNAN AGRICULTURAL UNIVERSITY
72: YANG Yan, GUO Shengyu, KUANG Ding, YANG Que, CHEN Jingzhen, LI Peiwang, JI Yuena, LI Li
54: BACTERIOSTATIC MULCHING FILM AND PREPARATION METHOD THEREOF
00: -
The invention relates to the technical field of plastic films, in particular to a bacteriostatic mulching film and a preparation method thereof. The bacteriostatic mulching film comprises the following raw materials in parts by weight: 90-130 parts of polyvinyl alcohol, 10-20 parts of polymethylethylene carbonate, 10-15 parts of starch-methacrylic acid graft copolymer, 4-10 parts of dauricine, 2-6 parts of antibacterial Chinese medicinal powder, 2-4 parts of ozone oil, 1-4 parts of compatilizer, 2-5 parts of organic plasticizer and 1-2 parts of carbon black. According to the invention, the prepared bacteriostatic mulching film has excellent bacteriostatic and anthelmintic properties by compounding the dauricine and antibacterial Chinese medicinal powder; at the same time, the raw materials selected in the invention are all biodegradable materials, which not only will not pollute the environment, but also can improve soil fertility.

21: 2023/02118. 22: 2023/02/21. 43: 2023/05/09
51: C22B
71: HENAN UNIVERSITY OF SCIENCE AND TECHNOLOGY
72: LIU Haiyang, XIANG Nan, WANG Wei, ZHANG Qing, LIU Wei, WANG Yaoli
54: METHOD FOR INCREASING DESILICIFICATION RATE OF HIGH-SILICA WASTE SLAG
00: -
The invention discloses a method for increasing desilicification rate of high-silica waste slag, which comprises the following steps: (1) crushing and grinding the high-silicon waste residue into fine ore; (2) adding a certain proportion of solid flake alkali into fine ore, then adding fly ash, and uniformly mixing in a high-speed cutting pulverizer to obtain premixed ore; (3) the box muffle furnace is heated to the appointed roasting temperature, and after the temperature is stabilized, the furnace is put into a corundum crucible filled with premixed ore, and after ten min, the premixed ore is raised to a constant roasting temperature, roasting is timed, roasting is finished, the corundum crucible is taken out, and air-cooled to obtain roasted ore; (4) fully dissolving the roasted ore with hot water, and then carrying out solid-liquid separation to obtain sodium silicate solution, which is the precursor for preparing silicon compounds such as white carbon black and molecular sieve. The iron-rich slag containing multiple metals can be used as a raw material for comprehensive extraction of multiple metals. The method has the advantages of simple operation method, wide raw material sources, wide application of synthetic products, no waste water in the whole process, clean and efficient process, novel method and strong practicability.

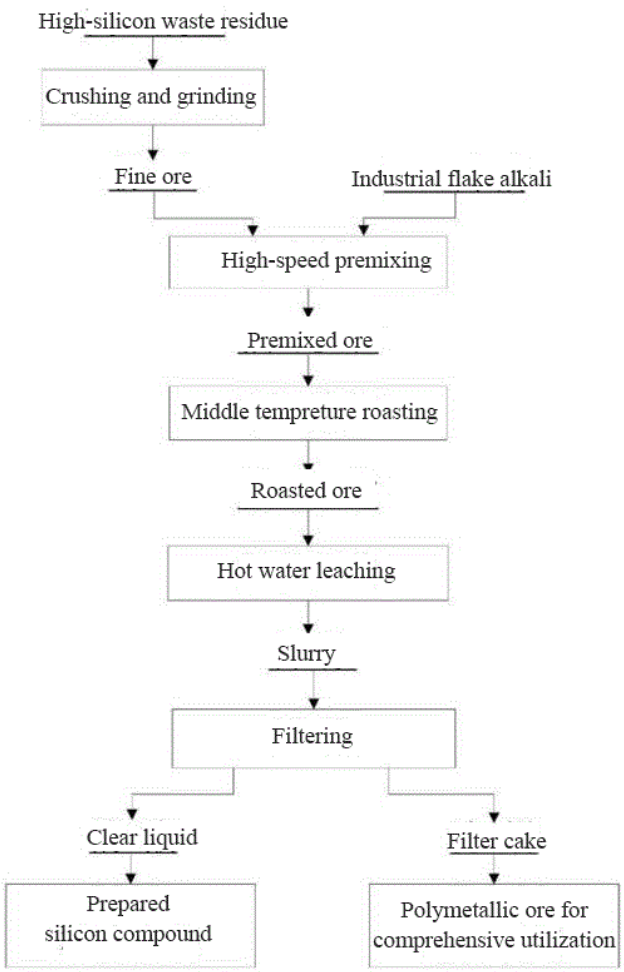

21: 2023/02120. 22: 2023/02/21. 43: 2023/05/09
51: G01N; G06F
71: Shanghai University
72: ZHEN, Qiang

54: METHOD FOR MEASURING IONIC CONDUCTIVITY OF OXYGEN ION-ELECTRON MIXED CONDUCTOR MATERIAL

00: -

The present invention relates to a method for measuring an ionic conductivity of an oxygen ion-electron mixed conductor material. A mixed conductor is a ceramic material capable of conducting both oxygen ions and electrons. The measuring method of the present invention is characterized in that the ionic conductivity is calculated using the change in resistance caused by the change in the geometric shape of a mixed conductor sample to be tested after electron blocking is performed. Since there is no change before and after the contact between the mixed conductor and a blocking electrode, an interface resistance, a blocking electrode resistance, and a Pt electrode resistance may not be taken into account in calculation, avoiding the resultant errors. The formula for calculating the ionic conductivity is: = (L1 - L2)/[S × (R - R')]. The measuring method of the present invention is simple and convenient.

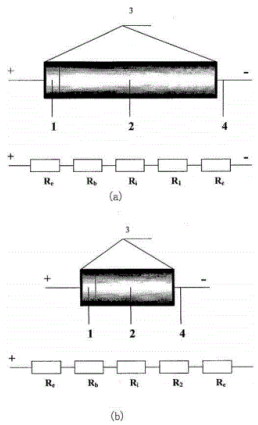

21: 2023/02121. 22: 2023/02/21. 43: 2023/05/09
51: C01F; C22B
71: Shanghai University
72: ZHEN, Qiang

54: METHOD FOR PREPARING ULTRAFINE ALUMINUM OXIDE-CHROMIUM OXIDE OR ALUMINUM OXIDE AND CHROMIUM OXIDE FROM ALUMINUM CHROMIUM SLUDGE

00: -

The present invention relates to a method for preparing ultrafine aluminum oxide-chromium oxide or aluminum oxide and chromium oxide from aluminum chromium sludge. The method includes: using solid waste aluminum chromium sludge as a raw material, washing, sieving, adding hydrochloric acid for dissolution, filtering to remove solid impurities, adding ammonia water and polyethylene glycol to the solution to generate precipitates, filtering, drying the obtained precipitates to yield an ultrafine aluminum hydroxide-chromium hydroxide solid mixture; roasting the solid mixture at 320-350 degree Celsius for thermal decomposition to yield ultrafine aluminum oxide-chromium oxide; adding hydrogen peroxide to the solid mixture, filtering to separate precipitates from the solution, and oven-drying and roasting the precipitates at 160 degree Celsius to yield ultrafine aluminum oxide; regulating the pH of the solution to 7-8 to allow chromium hydroxide to precipitate by itself, and roasting the

obtained chromium hydroxide precipitates at 200-300 degree Celsius.

21: 2023/02122. 22: 2023/02/21. 43: 2023/05/09
51: A61K
71: Zhengzhou University, Henan Institute of Medical and Pharmaceutical Sciences
72: ZHANG, Zhuangli, LIU, Ruijun, WANG, Min, WANG, Yarong, GAO, Likun, MA, Fang, PENG, Youmei, ZOU, Min, CHEN, Huiping, LI, Na, WANG, Xiuxia, ZHANG, Xiaojun, ZHAO, Zhihong, ZHENG, Liyun, ZHANG, Yan, ZHANG, Changzheng, LI, Jianbo, YANG, Yang, HE, Meixia
54: ACIDIC SENSITIVE LIPOSOME PREPARATION CO-LOADED WITH SODIUM NEW HOUTTUYFONATE AND CISPLATIN AND PREPARING METHOD THEREFOR
00: -
The present invention relates to a preparing method for an acidic sensitive liposome preparation co-loaded with sodium new houttuyfonate and cisplatin. The liposome preparation of the present invention has the advantages of high encapsulation efficiency, high drug loading capacity and easy to prepare, has good acid sensitivity, can delay drug release and increase a targeting effect, and is conductive to improvement on a drug effect.

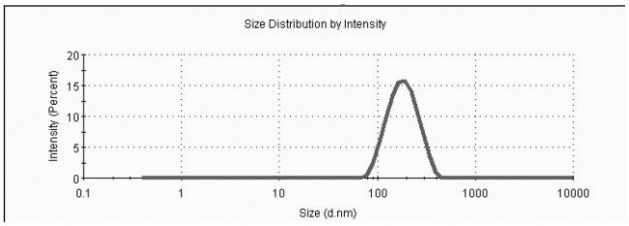

21: 2023/02123. 22: 2023/02/21. 43: 2023/05/09
51: E01D
71: Zhengzhou University of Aeronautics
72: Li Lei, Zhao Xianxian, Tian Limin, Wei Jianpeng, Su Xiaozhou, Li Xiaohu, Kang Liping, Zhao Wentong, Ma Hengyuan, Qiao Jing, Guan Jingwen, Li Guanghui
54: A DUCTILE SEISMIC SYSTEM OF UNDERGROUND STRUCTURES WITH DAMPERS AND ISOLATION BEARINGS
00: -
The invention relates to a ductile seismic system of underground structures with additional dampers and isolation bearings. The invention effectively solves the problem that the existing rubber isolation bearings are weak in horizontal shear resistance and cannot cope with large earthquakes; The technical solutions include: the seismic system is equipped with additional dampers on the basis of the traditional isolation rubber bearings, which are used to filter and buffer the vibration from the horizontal direction, thus reducing the impact on the isolation rubber bearings when encountering large seismic shear waves, and also extending the service life of the isolation rubber bearings.

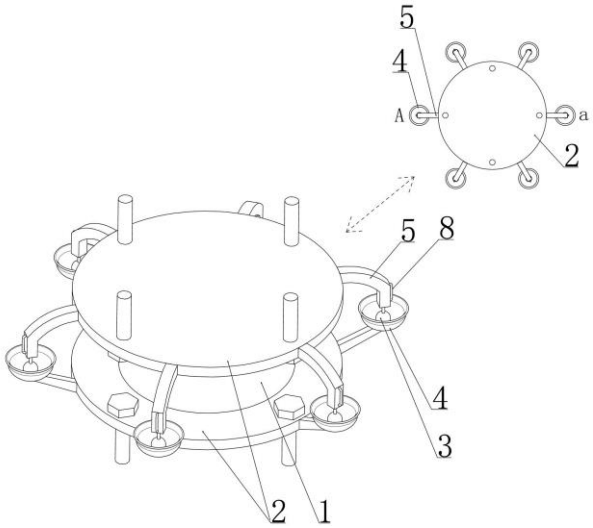

21: 2023/02124. 22: 2023/02/21. 43: 2023/05/09
51: G06Q
71: Sichuan Yanjiang Panning Expressway Co., Ltd., Wuhan University, Shu Dao Investment Group Co.,Ltd.
72: Yulin ZOU, Xiaoping ZHOU, Hao BAI, Yundong SHOU, Hao CHENG, Changjie HE, Junwei CHEN, Zhi ZHAO, Hu HUANG, Teng YE, Zheng LI, Deping GUO, Wenyong ZHENG, Lichuan CHEN, Maoyi LIU, Wei DU
54: INVERSE-SQUARE-ROOT-ACCELERATION METHOD FOR PREDICTING LANDSLIDE TIME
00: -
This invention discloses an inverse-square-root-acceleration method for predicting landslide time, including Step 1: Selecting the specific landslide body to be predicted, dividing the landslide body by slice method, and calculating the square root of acceleration when the landslide body is failed; Step 2: In the accelerated sliding stage of the landslide to be predicted, the original displacement monitoring data is calculated to obtain the velocity of the corresponding monitoring time. Step 3: Fitting the inverse of square root of acceleration-time diagram; Step 4: The specific formula and the relationship

between the inverse of the square root of the acceleration and time are obtained by fitting. The invention adopts the above-mentioned inverse-square-root- acceleration method for predicting landslide time and provides an accurate acceleration criterion for slope failure, that is, the acceleration of slope failure calculated by the slice method is theoretically calculated, At the same time, because the acceleration is faster than the velocity, the inverse-square-root- acceleration method can predict the slope failure time in a more accurate and safer way and more in line with the real failure time.

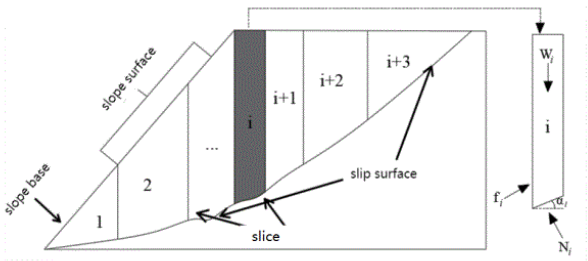

21: 2023/02125. 22: 2023/02/21. 43: 2023/05/09
51: C22C
71: Baotou Vocational and Technical College, CITIC Metals Co., Ltd
72: Feng Yanqing, Wang Houxin
54: LARGE NIOBIUM-CONTAINING HOT-ROLLED H-SECTION STEEL WITH A LOW YIELD RATIO OF 355MPA AND ITS PRODUCTION METHOD
00: -
The invention discloses a large niobium-containing hot-rolled H-section steel with a low yield ratio of 355MPa. And it comprises the following components in percentage by weight: C: 0.17~0.19%, Si: 0.25~0.35%, Mn:1.15%~1.25%, P: less than or equal to 0.025%, S: less than or equal to 0.02% and Nb: 0.012%~0.018%. And the invention also discloses a production method for the hot-rolled H-section steel. The large niobium-containing hot-rolled H-section steel with a low yield ratio of 355MPa is added with the alloying element niobium, so that the strength of the H-section steel is increased, And at the same time, the characteristics of impact toughness and low yield ratio are ensured, and the uniformity is good after rolling and cooling, and the performance is stable and does not fluctuate; The narrow composition of each element is controlled, the content of sulfur and phosphorus is strictly controlled, and the production cost is reduced by low Si and low Mn. The market prospect is broad, which is conducive to meeting the needs of the development of building steel structures. The production method foo the hot-rolled H-section steel is simple and suitable for industrial production.

21: 2023/02126. 22: 2023/02/21. 43: 2023/05/09
51: A61K
71: Changzhou Maternal And Child Health Care Hospital
72: CHEN Kejin, LIU Zhiwei, SHI Zhonghua, YU Bin
54: MEDICINE FOR PREVENTING AND/OR TREATING CONGENITAL SYPHILIS
00: -
Disclosed is a medicine for preventing and/or treating congenital syphilis, and relates to the technical field of biomedicine; the medicine includes substances that inhibit the activation of TLR2/NF-kappa B pathway in syncytiotrophoblast. In the invention, firstly the death type of STB cells is defined in clinical level and its correlation with TLR2/NF-kappa B is verified; subsequently, the mechanism of activation of TLR2/NF-kappa B pathway and STB cell damage by Treponema pallidum infection is studied at the cellular level; finally, studies at the cellular level have proved that inhibiting TLR2/NF-kappa B pathway alleviates the damage of syncytiotrophoblast barrier, thus achieving prevention and/or treatment of congenital syphilis.

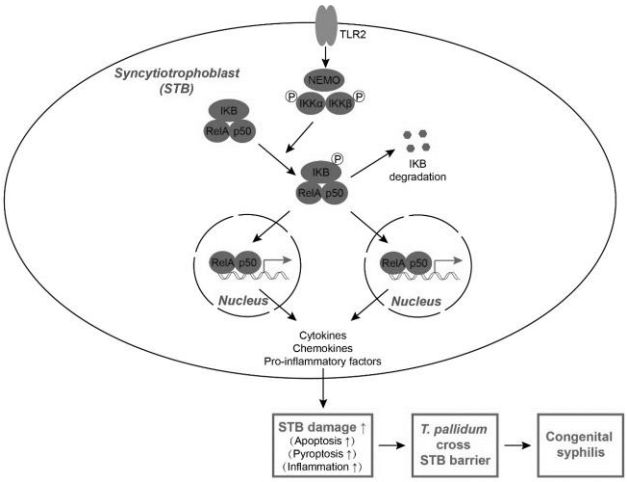

21: 2023/02127. 22: 2023/02/21. 43: 2023/05/09
51: C09J
71: Suzhou Suixin Semiconductor Science&Technology Co., Ltd

72: JIANG Zhitao, WANG Juan, DENG Renren
54: PHOTOPYROLYSIS ADHESIVE DOPED WITH TITANIUM TRIOXIDE NANOPARTICLES AND PREPARATION METHOD THEREOF
00: -
The invention provides a photopyrolysis adhesive doped with titanium trioxide nanoparticles, characterized by comprising the following components in percentage by mass: 1 percent-10 percent of nano titanium trioxide, 5 percent-49 percent of polymer, 30 percent-60 percent of solvent, 0.1 percent-5 percent of surfactant, 1 percent-10 percent of functional filler and 1 percent-10 percent of graphite carbon black; the average particle size of the nano titanium trioxide is 50-200nm. The invention also discloses a preparation method of the doped titanium trioxide particle adhesive. The adhesive provided by the invention not only has good bonding performance, but also has good photo-thermal dissociation performance.

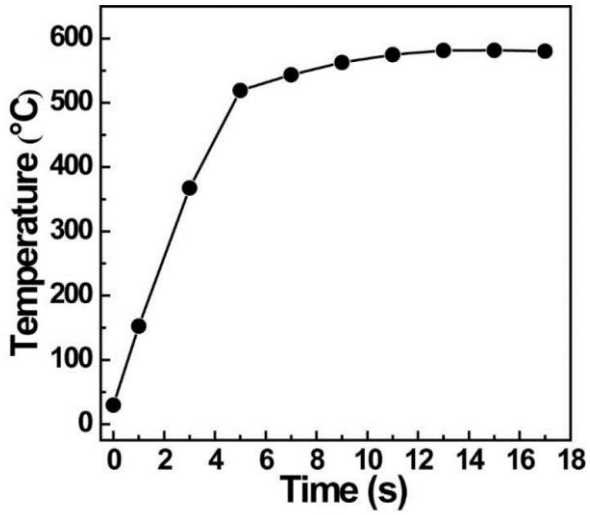

21: 2023/02128. 22: 2023/02/21. 43: 2023/05/09
51: G06Q
71: Jiaxing Vocational Technical College.
72: Luo Jun
54: CROSS-BORDER ELECTRONIC COMMERCE QUOTATION SYSTEM AND METHOD
00: -
The invention discloses a cross-border electronic commerce quotation system and method. The cross-border electronic commerce quotation system includes a processor, an image processing module and a price display module, wherein an input end and an output end of the processor are electrically connected with an output end of an entry module and an input end of the price display module through conductors respectively, the input end of the processor is connected with output ends of an X-ray detection module, a weighting module and an express scanner through conductors respectively, and an output end and an input end of the image processing module are connected with an input end of an electronic commerce data management system and an output end of a data acquisition device over a network respectively. According to the invention, mutual verification between image information processed by the image processing module and an express billing result in the processor is facilitated, the errors are reduced, the list price of goods in an electronic commerce trading system can be monitored by a market monitoring module, avoiding rule and regulation violation phenomena.

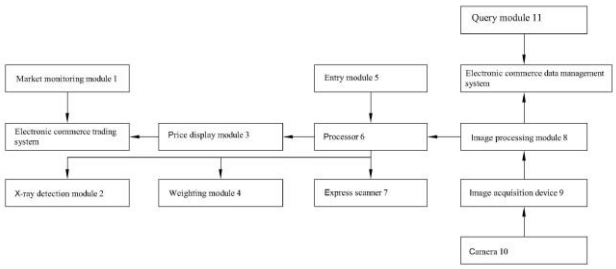

21: 2023/02129. 22: 2023/02/21. 43: 2023/05/09
51: A01H
71: Zhejiang Institute of Landscape Plants and Flowers, Jindong district, Jinhua City, Popularization and Application Center of Flowers and Trees New Seedling Varieties and Technologies, The Crop Technology Extension Center of Suichang County, Lishui, Zhejiang Province, The Administration Office of the "People's Victory Canal", Henan Province
72: Zhang JiaQiang, Zhu KaiYuan, Wang Jie, Hou WanChun, Liu HuiChun, Xu WenTing
54: TISSUE CULTURE METHOD FOR PLUMBAGO AURIOLATA F. ALBA
00: -
The present invention relates to the field of plant tissue culture, and in particular to a tissue culture method for plumbago auriolata f. alba. According to the present invention, branches of the plumbago auriolata f. alba serve as explants, an in vitro regeneration system for the plumbago auriolata f. alba is established by means of the processes of explant treatment, axillary bud induction, axillary bud proliferation, rooting, seedling hardening,

transplanting, etc., and therefore, a proliferation rate of the plumbago auriolata f. alba is greatly improved. The present invention is not limited by seasons, has rapid proliferation and a short propagation period, can completely inherit excellent characteristics of a female parent, and provides technical support for achieving tissue culture industrial production of the plumbago auriolata f. alba.

21: 2023/02130. 22: 2023/02/21. 43: 2023/05/09
51: B65G
71: Jiaxing Vocational Technical College.
72: Luo Jun
54: CARGO DISTRIBUTION DISPATCHING APPARATUS FOR CROSS-BORDER ELECTRONIC COMMERCE
00: -
The invention discloses a cargo distribution dispatching apparatus for cross-border electronic commerce, comprising a feeding conveying line, a cargo dispatching apparatus and a multi-layered classified conveying apparatus, the feeding conveying line is configured to receive cargoes and convey the cargoes into the cargo dispatching apparatus, the cargo dispatching apparatus identifies the manifest information of the cargoes by means of a visual camera after receiving the cargoes, then the cargoes are correspondingly conveyed into corresponding classified conveying assemblies in the multi-layered classified conveying apparatus, a horizontal receiving conveying line in the classified conveying assemblies receives the cargoes and then conveys the cargoes into an inclined classified conveying line, the inclined classified conveying line conveys the cargoes, and then the cargoes in different sizes are classified and discharged through a plurality of discharging ports with outlets in different sizes, so that distribution, conveying, dispatching and classification of the cargoes are completed. The whole process is automatic, manual dispatching and classification are not needed, and the labor cost can be effectively saved.

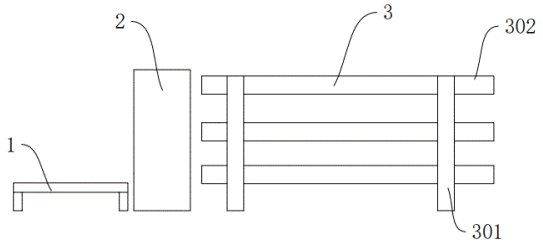

21: 2023/02132. 22: 2023/02/21. 43: 2023/04/19
51: C30B
71: INSTITUTE OF GEOCHEMISTRY CHINESE ACADEMY OF SCIENCES
72: DAI, LIDONG, HU, HAIYING
33: CN 31: 202211397958.X 32: 2022-11-09
54: METHOD FOR PREPARING CHROMIUM-DOPED UNHYDROUS SINGLE-CRYSTAL GALAXITE UNDER HIGH-TEMPERATURE AND HIGH-PRESSURE CONDITION
00: -
A method for preparing chromium-doped unhydrous single-crystal galaxite under a high-temperature and high-pressure condition comprises: preparing a galaxite powder sample using solid rosy trigonal rhombus manganese carbonate crystals, solid aluminum isopropoxide powder, solid oxalic acid powder, solid chromium(III) acetylacetonate crystalline powder and liquid dilute nitric acid as starting materials according to galaxite stoichiometry; cold-pressing the galaxite powder sample into discs, stacking the discs in a graphite crucible, and placing the graphite crucible in a high-temperature oxygen atmosphere furnace for high-temperature calcination to prepare a cylindrical galaxite sample; and enabling the cylindrical galaxite sample to undergo high-temperature and high-pressure reaction to obtain chromium-doped unhydrous single-crystal galaxite. The present invention solves the problem that there is no technique for preparing and large-grained chromium-doped unhydrous single-crystal galaxite under a high-temperature and high-pressure condition at present, and provides large-grained chromium-doped unhydrous single-crystal galaxite experimental samples.

21: 2023/02133. 22: 2023/02/21. 43: 2023/04/19
51: C30B
71: INSTITUTE OF GEOCHEMISTRY CHINESE ACADEMY OF SCIENCES

72: DAI, LIDONG, HU, HAIYING
33: CN 31: 202211467503.0 32: 2022-11-22
54: METHOD FOR PREPARING COBALT-DOPED UNHYDROUS SINGLE-CRYSTAL GAHNITE UNDER HIGH-TEMPERATURE AND HIGH-PRESSURE CONDITION
00: -
A method for preparing cobalt-doped unhydrous single-crystal gahnite under a high-temperature and high-pressure condition comprises: preparing a gahnite powder sample mixture using solid basic zinc carbonate powder, solid aluminum isopropoxide powder, solid oxalic acid powder, solid cobalt 4-oxopent-2-en-2-olate crystals and liquid dilute nitric acid as starting materials; cold-pressing the gahnite powder sample mixture into sample discs, stacking the sample discs in a graphite crucible from bottom to top, placing the graphite crucible in a high-temperature oxygen atmosphere furnace for calcination, and quenching to obtain glassy-state gahnite sample powder; cold-pressing the glassy-state gahnite sample powder into a cylindrical sample, sealing the cylindrical sample in a graphite tube, and then placing it in a high-temperature and high-pressure apparatus for high-temperature and high-pressure reaction to obtain cobalt-doped unhydrous single-crystal gahnite. The present invention breaks through the technical bottleneck of single-crystal gahnite synthesis.

21: 2023/02137. 22: 2023/02/21. 43: 2023/05/09
51: A61M
71: Henan Provincial Children's Hospital Zhengzhou Children's Hospital
72: Wang Yue
33: CN 31: 202320058644.0 32: 2023-01-09
54: AN ANESTHETIC INJECTION DEVICE
00: -
The invention belongs to the field of medical devices in the department of anesthesiology, and discloses an anesthetic injection device, which is characterized in that it comprises a support frame, a syringe, a drug pushing component, and a quantitative adjusting component. The syringe is fixed on the support frame, the quantitative adjusting component and the drug pushing component are arranged between the syringe and the support frame, and the drug pushing component is used to push out the drug in the syringe, The quantitative adjustment component is used to determine the amount of drugs injected. The drug pushing component pushes the prescribed amount of drugs and stops pushing drugs under the action of the quantitative adjustment component. The invention solves the problem of inaccurate anesthetic injection amount and anesthetic injection speed in the prior art.

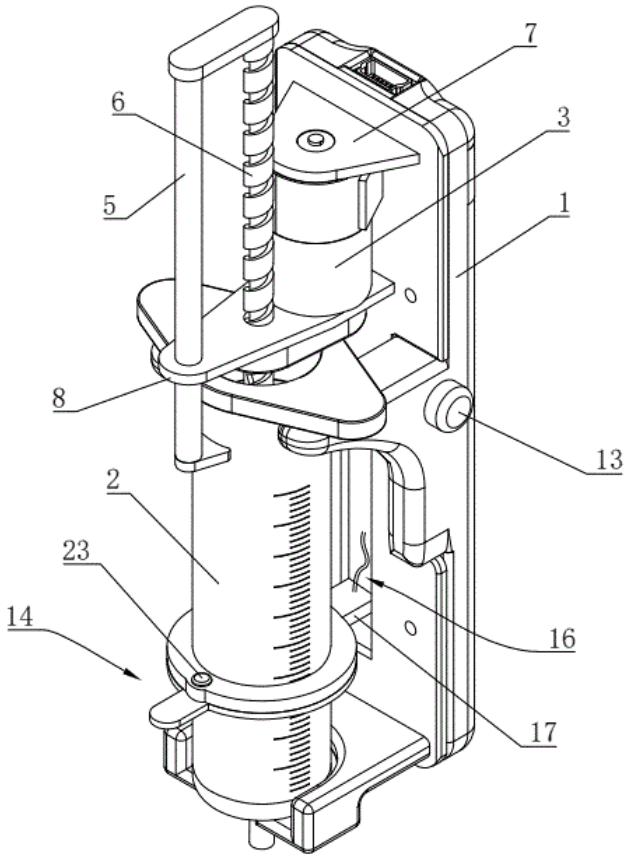

21: 2023/02138. 22: 2023/02/21. 43: 2023/05/09
51: G01F
71: Henan Yongchuang Automation Control Technology Co., Ltd
72: Gao Weiwei, Han Lipeng, Gao Binbin
33: CN 31: 202310016879.8 32: 2023-01-06
54: A MAGNETIC FLAP LEVEL GAUGE WITH AUTOMATIC DETECTION AND CORRECTION IN LOW TEMPERATURE ENVIRONMENT
00: -
The invention discloses a magnetic flap level gauge for automatic detection and correction in low temperature environment, which comprises a magnetic flap level gauge body, which comprises a main pipe, a magnetic float, a flap box, a magnetic flap, an upper flange, a lower flange, an upper

connecting pipe and a lower connecting pipe; There is a fixed pulley block under the upper connecting pipe, a rotating shaft above the lower connecting pipe, and a rope winding pulley block on the rotating shaft; There is a walking part between the fixed pulley block and the rope reel block, and there is a pointer in the middle of the horizontal axis of the walking part; There are rotating sleeves at both ends of the horizontal shaft, and there is a rope on the rotating sleeve. The other end of the rope bypasses the fixed pulley block upwards and then winds down on the rope reel block; When the pointer deflects upward, the reel group reels the rope and drives the walking part to move upward. When the pointer deflects downward, the reel group releases the rope and drives the walking part to move downward, and the pointer horizontal reel group is fixed; The horizontal shaft is provided with heating wire, and the magnetic flap level gauge body is provided with insulation layer. The invention solves the problem that the magnetic flap level gauge can not operate reliably in low temperature environment.

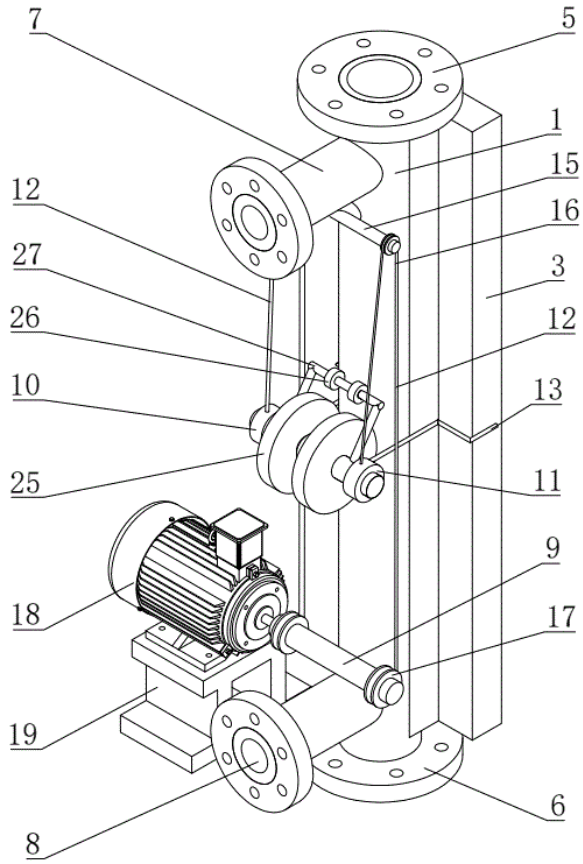

21: 2023/02139. 22: 2023/02/21. 43: 2023/05/09
51: G05D
71: Henan Yongchuang Automation Control Technology Co., Ltd
72: Gao Weiwei, Han Lipeng, Gao Binbin
33: CN 31: 202310035670.6 32: 2023-01-10

54: A SELF-BALANCING MAGNETIC FLOAT SYSTEM

00: -

The invention discloses a self-balancing magnetic float system, which comprises a shell, wherein the upper part of the shell is provided with a left and right symmetrical pulley, and the lower part of the pulley is provided with a magnetic steel in a horizontal position; The lower part of the shell is filled with solution. In the solution, there is a densimeter which is vertical and floating in the solution. The upper end of the densimeter is connected to the upper end of the magnetic steel through the first rope around the pulley; The lower end of the shell is provided with a liquid outlet unit and a liquid inlet unit, and the upper end of the shell is provided with a ventilation unit; When the

ventilation unit inflates into the shell, the solution in the shell is discharged from the shell through the liquid outlet unit; The liquid inlet unit is connected with the ventilation unit through the second rope. When the solution is injected into the shell through the liquid inlet unit, the air in the shell is discharged from the shell through the ventilation unit; The liquid inlet unit is connected to the liquid level control unit through the third rope, so that when the liquid level in the shell reaches the same height, the liquid inlet unit and the ventilation unit are closed to close the shell. The invention solves the problem that the magnetic float in the variable density medium cannot accurately indicate and cannot automatically balance.

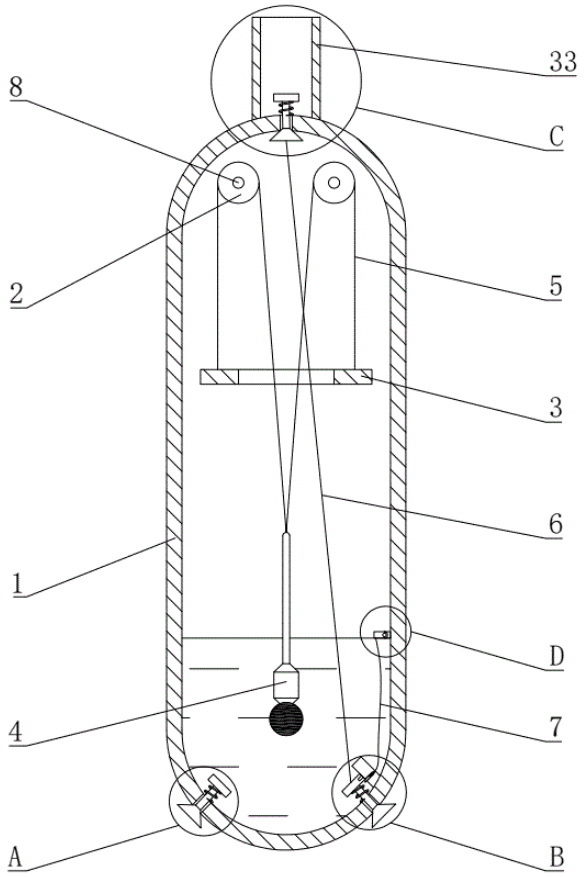

21: 2023/02140. 22: 2023/02/21. 43: 2023/05/09
51: G07G
71: Zhengzhou University of Aeronautics
72: Bai Qingli, Mo Zuying
54: AN INTELLIGENT LIBRARY AND INFORMATION MANAGEMENT DEVICE
00: -

The invention relates to an intelligent library and information management device, which skillfully uses the opening and closing of the drop window on the desktop, and the opening and closing of the device to drop the books onto the fixed plate of the book transfer device. Through the transfer of the indexing plate, the books fall from the fan-shaped exit to the corresponding transfer vehicle, and the corresponding resistance information is produced through the book information identifier, The movement of the U-shaped plate makes the sliding rheostat composed of the conductive contact and the resistance wire on it run, making it compare with the resistance value information, so as to ensure that the books fall into the corresponding transfer vehicle. The book information collector will record the reading books and page numbers of the readers, and synchronize them into the identity information of the borrowers, so as to automatically classify and sort the books of the borrowers, so as to facilitate the next reading, convenient and practical, suitable for promotion.

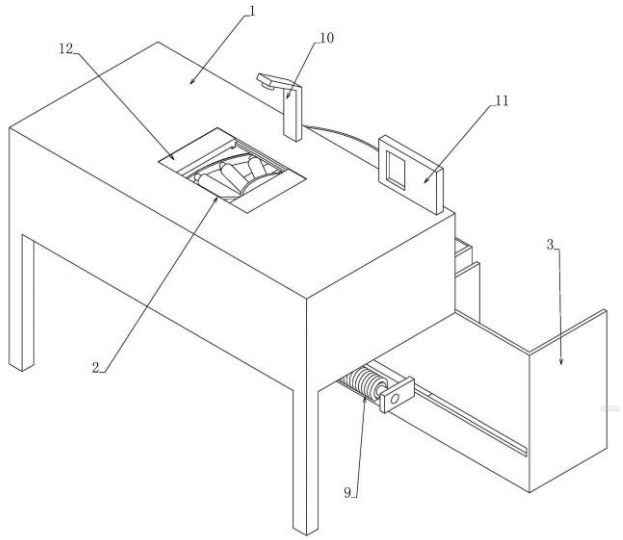

21: 2023/02141. 22: 2023/02/21. 43: 2023/05/09
51: F21S
71: Jiaxing Vocational Technical College.
72: Wu RongSen
54: LIGHTING DEVICE BASED ON INTERNET OF THINGS, AND CONTROL METHOD THEREOF
00: -

The invention discloses a lighting device based on Internet of Things, and a control method thereof. The lighting device comprises lighting lamps and a

control assembly, wherein the lighting lamps comprise lampposts, bulbs and lampshades, and reflectors are arranged inside the lampshades; each of the reflectors is composed of a center plate and a plurality of reflective plates, and the reflective plates are rotatably installed on the center plate, and are overlapped with each other to form a cover body; the lampshades are also internally provided with driving mechanisms to drive the reflective plates to rotate around the center plates; and the control assembly comprises a main control unit, an image processing unit, a lighting control unit and cameras, and the image processing unit is configured to process images captured by the cameras, and recognize pose information of persons in the images, and the lighting control unit controls the work of the driving mechanisms based on the pose information. The invention is provided with the retractable reflectors, which can refract light and improve illuminating brightness; and the lighting ranges of the street lamps can be reduced by narrowing the reflectors, which avoids affecting the normal rest of residents.

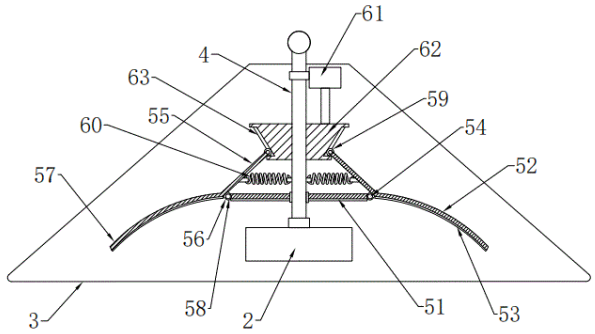

21: 2023/02143. 22: 2023/02/21. 43: 2023/05/09
51: C23C
71: Shenyang University of Technology
72: ZHANG, Song, HUO, Renjie, ZHAO, Te, WANG, Rui, WU, Chenliang, ZHANG, Chunhua
54: A MATERIAL AND TECHNICAL METHOD USED FOR CORROSION-RESISTANT MODIFIED NICKEL-ALUMINUM BRONZE ALLOY COATING
00: -
The invention relates to a material and method for preparing corrosion-resistant modified nickel-aluminum bronze alloy coating. With a small amount of rare earth elements La, Y and nickel-aluminum bronze as raw materials, the wire-like material is prepared by continuous casting, continuous drawing according to a certain proportion, the diameter is 1.2 mm; the corrosion resistant and modified nickel-aluminum bronze coating was prepared on the surface of carbon steel by CMT advanced technology. The introduction of rare earth elements makes the microstructure of the coating uniformly distributed, promotes the formation of strengthening phase and restrains the formation of harmful phase, which can effectively improve the comprehensive mechanical properties of the coating and improve the wear resistance of the coating, thus showing excellent comprehensive properties in seawater environment. The modified coating has a good cheap replacement, and has a broad application prospect.

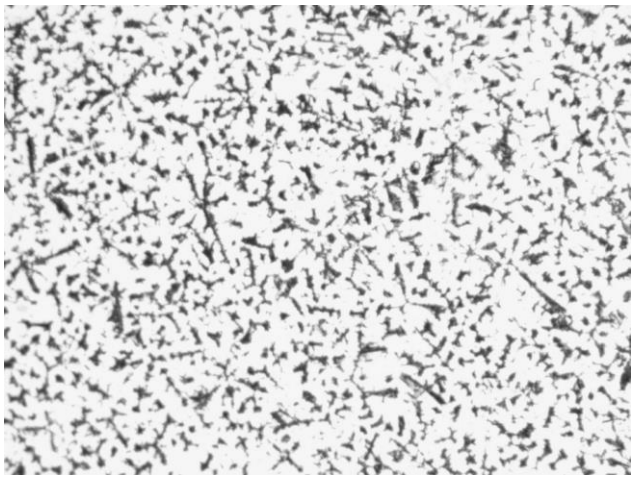

21: 2023/02144. 22: 2023/02/21. 43: 2023/05/09
51: C22C
71: Shenyang University of Technology
72: WU, Chenliang, WANG, Dingchen, CHEN, Shengyuan, CAO, Bosheng, ZHANG, Song, ZHANG, Chunhua
54: THE POWDER AND TECHNICAL METHOD USED IN LASER SURFACE HIGH ENTROPY ALLOYING OF COCRFENIMNTIX COATINGS
00: -
The purpose of this invention is to provide the powder used in laser surface high entropy alloying of CoCrFeNiMnTix coatings and the technical method of the laser surface high entropy alloying. The chemical composition of the powder used in laser surface high entropy alloying of CoCrFeNiMnTix coatings in at.% is 14.3%-20% Co, 14.3%-20% Cr, 14.3%-20% Fe, 14.3%-20% Ni, 14.3%-20% Mn, 0-28.6%Ti. The method for preparing laser surface high entropy alloying of CoCrFeNiMnTix coatings using the powder is as follows: process the

substrate; substrate surface grinding; sandblasting; wash and dry; mix powder, dry powder, spread the powder; laser surface high entropy alloying. The powder and the method of the invention can prepare the laser surface high entropy alloying of CoCrFeNiMnTix coatings, and the CoCrFeNiMnTix HEA coatings have the advantages of low cost, high resistance to wear, corrosion and cavitation erosion, and it has important application value in the fields of ship propellers, pumps, turbines, bearings, underground water pipelines and so on due to the high resistance to wear, corrosion and cavitation erosion. It also has the characteristics of high tailor in the manufacturing process, short product production cycle, high resource utilization and can produce parts of complex structure, etc.

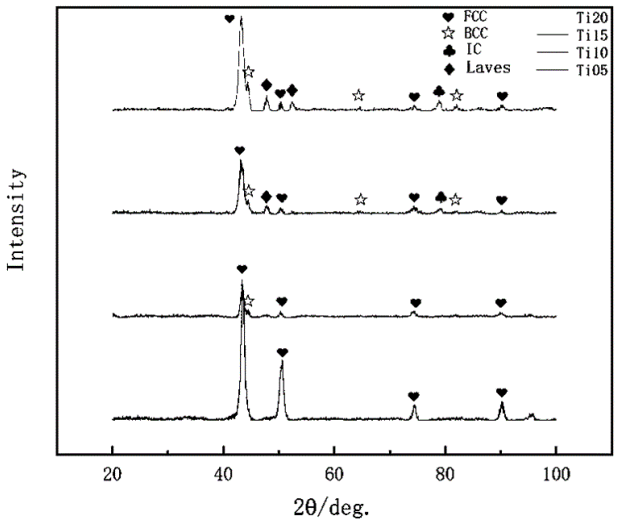

21: 2023/02181. 22: 2023/02/22. 43: 2023/05/19
51: A23L; C11B
71: Zunyi Vocational and Technical College
72: QIN, Cheng, LUO, Xirong, QIU, Ninghong, LI, Jing, LI, Tangyan, GUO, Ya, TUO, Haiyan
33: CN 31: 202210500467.7 32: 2022-05-10
54: METHOD FOR PREPARING CHILLI SEED OIL AND CHILLI SEED DIETARY FIBERS
00: -
Disclosed is a method for preparing chilli seed oil and chilli seed dietary fibers, including the following steps: performing raw material screening, drying, pressing and extraction, and then carrying out low-temperature centrifugation, desolvation and dewaxing on the extracting solution to obtain chilli seed oil and seed meal; adding distilled water into the obtained seed meal to form an aqueous solution, then performing secondary extraction on the aqueous solution, and carrying out precipitation, desolvation and freeze-drying on the extracting solution to obtain the chilli seed dietary fibers. According to the method, production process parameters and process conditions are optimized, and the chilli seed oil and the chilli seed soluble dietary fibers are prepared by taking chilli seeds as a raw material. The nutrition, quality and function of the product are better protected, and a deep-processing industrial chain of chillies is also extended, and the additional value of chilli processing is improved.

21: 2023/02187. 22: 2023/02/22. 43: 2023/05/19
51: F24C
71: Anhui Technical College Of Mechanical and Electrical Engineering
72: Chunxiang Wang, Kai Xu, Jiahui Sun, Xuegang Qiu, Ziming Ma, Dewei Wang
54: A GAS COOKER SWITCH WITH AUTOMATIC SHUTDOWN FUNCTION
00: -
The invention discloses a gas cooker switch with automatic closing function, belonging to the technical field of gas cooker switch. It comprises a hearth body, the hearth body is fixedly arranged on both sides of the top of the hearth body, the top of the hearth body is provided with a cavity, the bottom of the cavity body wall rotation is connected with a control shaft, the control shaft external surface is clamped with a closed component, the closing component and the cavity rotation connection. The chamber is arranged above the tank body, the tank body is provided with a finite bit component, and the tank body is connected with the cavity. In the invention, the motor drives the main gear to rotate by setting the closing component, and the main gear drives the transmission gear to rotate through the reduction gear. The transmission gear drives the limit block to move through the ratchet groove, the limit block drives the rotating disc, the rotating disc drives the control shaft to turn and drives the control switch to turn off, so as to ensure that after the required time, the control switch can automatically rotate off the gas, to prevent accidents.

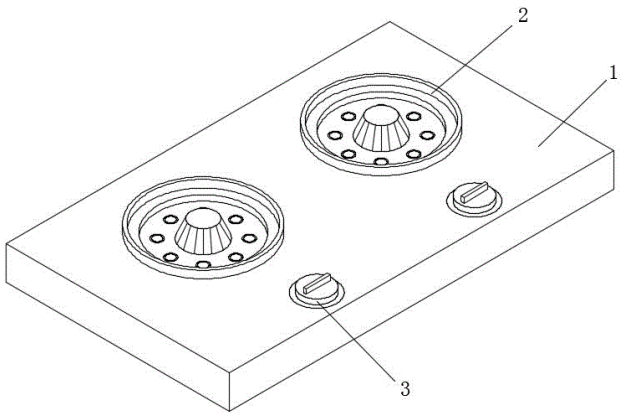

21: 2023/02198. 22: 2023/02/22. 43: 2023/05/19
51: G06F
71: Zhejiang Yuexiu University
72: Jun Fang
54: A COMPUTER DATA PROCESSING DEVICE BASED ON BIG DATA
00: -
The invention relates to the technical field of computer information processing, in particular to a computer data processing device based on big data. It comprises an dust box, air filter, exhaust fan, data processing component, cooling component, drying component, gas pipe, backup power supply, latch and temperature sensor, and data processing component includes a data processor and a damper. The two points of the damper are fixedly connected with the data processor and the dust-proof box respectively, and the temperature sensor is fixed inside the dust-proof box to detect the temperature in the dust-proof box. The invention has the advantage that the damper greatly reduces the vibration amplitude of the data processor and effectively reduces the damage of the data processor when the vibration occurs. Dry components provide dry air inside the box to prevent the corrosion of the electronic components inside the box caused by damp air and improve the service life of the electronic components; Exhaust fans and cooling components work together to effectively reduce the internal temperature of the container and improve the working efficiency of the device.

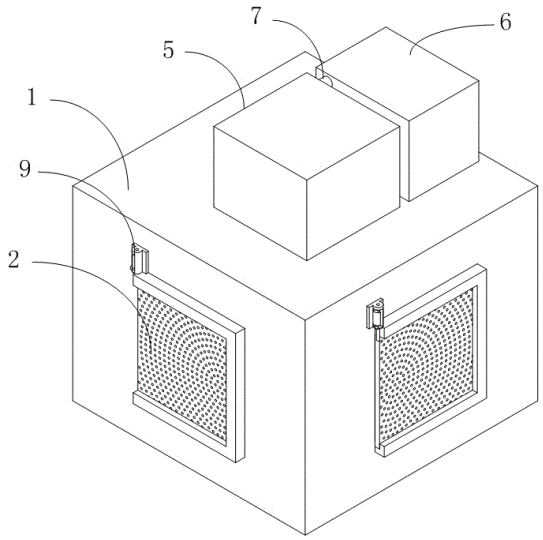

21: 2023/02201. 22: 2023/02/22. 43: 2023/05/19
51: G01N
71: Jilin Agricultural University
72: Huaizhi Jiang, Xuesong Shan, Yang Chen, Limin Sun, Wei Guo, Yujiang Yang, Hui Chen
54: A METHOD FOR EVALUATING MEAT QUALITY TRAITS OF SHEEP BY BIA METHOD
00: -
The present invention discloses a method for evaluating sheep meat quality traits by BIA method, involving the field of meat quality assessment technology. The present invention uses a fat measuring module to evaluate the flesh traits of sheep, first prepare an insulating pad, select a live sheep to be evaluated, and fix it after lying on its side on the insulating pad; Shave the symmetrical back, hind legs and ankle parts of the sheep to expose the surface skin; Based on the lipometry module, 4-6 sets of contact electrodes were taken and attached to the surface skin area of sheep after shaving; Input a fixed current to the contact electrode to obtain the electrical impedance value of the sheep body feedback; The electrical impedance data obtained above were calculated and analyzed to obtain the flesh traits of sheep. The present invention has high accuracy in evaluating sheep meat quality traits, high safety, and short measurement time, fast and convenient, in addition to comprehensive test indicators, which can provide a strong reference for scientific breeding of sheep.

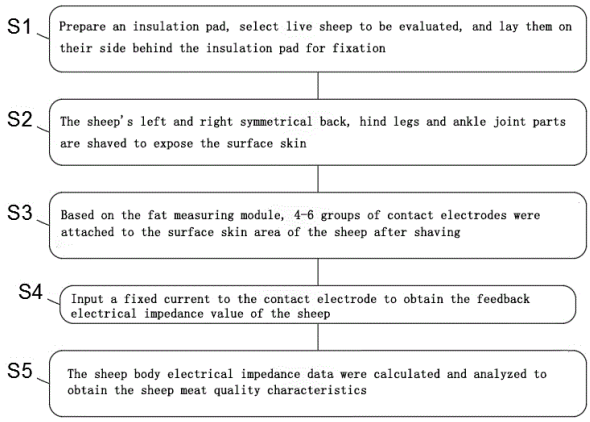

21: 2023/02208. 22: 2023/02/22. 43: 2023/04/20
51: C30B
71: INSTITUTE OF GEOCHEMISTRY CHINESE ACADEMY OF SCIENCES
72: DAI, LIDONG, HU, HAIYING
33: CN 31: 202211551729.9 32: 2022-12-05
54: METHOD FOR PREPARING MANGANESE-DOPED AND HIGH-WATER SINGLE-CRYSTAL TREVORITE UNDER HIGH-TEMPERATURE AND HIGH-PRESSURE CONDITION
00: -
A method for preparing manganese-doped and high-water single-crystal trevorite under a high-temperature and high-pressure condition comprises: preparing trevorite powder sample mixture discs using solid light-green basic nickel carbonate inorganic compound powder, solid transparent russet flaky ferric citrate (III) crystals, solid oxalic acid powder, solid pink manganese stearate powder, solid nickel hydroxide powder, solid natural manganite powder and liquid dilute nitric acid as starting materials; calcinating and quenching the trevorite powder sample mixture discs in a high-temperature oxygen atmosphere furnace to prepare a cylindrical trevorite sample; and placing water-sourced discs at two ends of the cylindrical trevorite sample and then sealing the cylindrical trevorite sample with the water-sourced discs for high-temperature and high-pressure reaction to obtain single-crystal trevorite. The method can effectively synthesize large-grained, manganese-doped and high-water single-crystal trevorite and can meet the geoscientific research requirements of various high-temperature and high-pressure laboratory simulations.

21: 2023/02209. 22: 2023/02/22. 43: 2023/04/20
51: C30B
71: INSTITUTE OF GEOCHEMISTRY CHINESE ACADEMY OF SCIENCES
72: HU, HAIYING, DAI, LIDONG
33: CN 31: 202211600166.8 32: 2022-12-13
54: METHOD FOR PREPARING CALCIUM-DOPED AND HIGH-WATER SINGLE-CRYSTAL FRANKLINITE UNDER HIGH-TEMPERATURE AND HIGH-PRESSURE CONDITION
00: -
A method for preparing calcium-doped and high-water single-crystal franklinite under a high-temperature and high-pressure condition comprises: preparing a cylindrical franklinite sample using solid basic zinc carbonate inorganic compound powder, solid transparent russet flaky ferric citrate (III) crystals, solid oxalic acid powder, solid calcium stearate powder, solid zinc hydroxide powder, solid hydrated lime powder and liquid dilute nitric acid as starting materials; preparing water-sourced discs using the zinc hydroxide powder and the hydrated lime powder with a weight ratio of 4:1 as a water source; and sequentially sealing the cylindrical franklinite sample and the two water-sourced discs in an inner tube, which is a graphite tube, for high-temperature and high-pressure reaction to obtain high-water single-crystal franklinite. The present invention fundamentally solves the problem that there is no technique for preparing large-grained, calcium-doped and high-water single-crystal franklinite under a high-temperature and high-pressure condition at present, and can obtain large-grained, calcium-doped and high-water single-crystal franklinite experimental samples.

21: 2023/02217. 22: 2023/02/22. 43: 2023/05/19
51: A23K
71: China Agricultural University
72: WU, Yi, MO, Ruixia, ZHANG, Mingrui, WANG, Haotian, LIU, Tianyi, LIU, Pan
54: PROBIOTICS POWDER FOR CATS AND PREPARATION METHOD THEREFOR AND APPLICATION THEREOF
00: -
The present invention relates to a probiotics powder for cats and a preparation method therefor and an application thereof. The probiotics powder for cats includes saccharomyces cerevisiae boulardii, bacillus coagulans, mannan oligosaccharide, inulin,

maltodextrin, taurine, arginine, glutamine, yeast extract and glucose. Compared with the prior art, the present invention has the beneficial effects that the self-made probiotics powder has no toxic actions to cats but features probiotic function, excellent palatability and obvious attractant effect. Hairs of cats fed with the probiotics powder provided by the present invention are smoother.

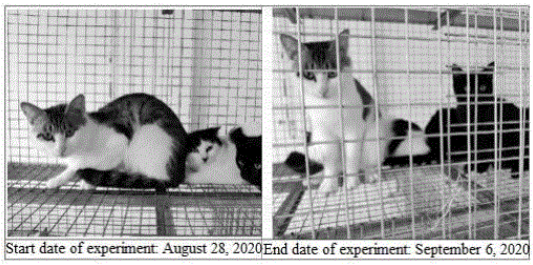

21: 2023/02230. 22: 2023/02/22. 43: 2023/05/19
51: C12Q
71: Yellow Sea Fisheries Research Institute, Chinese Academy of Fishery Sciences, Chinese Academy of Inspection and Quarantine, Anjoy Foods Group CO., LTD., Ocean University of China
72: Wenjia Zhu, Xiaoli Xu, Zhenxing Li, Lianzhu Wang, Jianlian Huang, Lin Yao, Zhihui Qin
33: CN 31: 202310002355.3 32: 2023-01-03
54: A DETECTION KIT FOR DETECTING EGG ALBUMIN IN SURIMI PRODUCT AND ITS DETECTION METHOD
00: -
The invention belongs to the technical field of immunoanalysis and relates to a detection kit for detecting egg albumin in surimi products. We used rabbit polyclonal anti-ovalbumin antibody as capture antibody and horseradish peroxidase labeled rabbit anti-egg albumin polyclonal antibody as detection antibody. Four-parameter method was used to fit the standard curve, so as to establish the sELISA detection method of egg albumin and evaluate its performance. Compared with the prior technology, the method is rapid, the detection kit obtained has high sensitivity, good accuracy and stability, and can be better used for quantitative detection of egg albumin in surimi products.

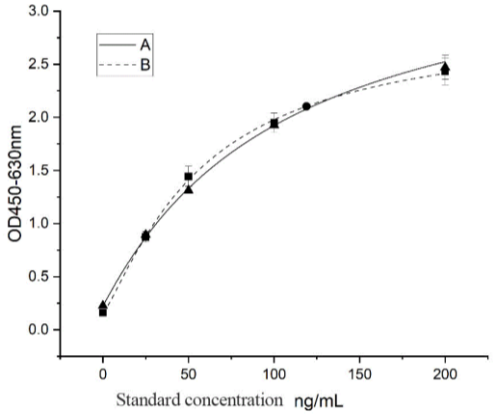

21: 2023/02231. 22: 2023/02/22. 43: 2023/05/19
51: A42B
71: TAIYUAN UNIVERSITY OF TECHNOLOGY
72: CUI Chuanbo, YUAN Yanwei, ZHOU Yuying, LI Jiangjiang, JIAO Zhipeng, SONG Zhiqiang
54: A METHOD FOR MINE FIRE ESCAPE ROUTE
00: -
The invention relates to a mine fire escape route method, belonging to the method for safely escaping from a mine fire. And it comprises an underground monitoring subsystem, a smoke plume migration simulation subsystem, an escape route selection subsystem and a rescue and escape command guiding subsystem; The monitoring subsystem consists of a ground central station and various underground sensors, and monitors the temperature, gas and smoke parameters of key underground network branches in real time; The smoke plume simulation system simulates the dynamic evolution law of underground fire smoke through FDS software; The escape route selection subsystem uses cellular automaton to establish the mathematical and physical model of mine ventilation network structure, dynamically quantify the complex roadway environment and smoke pollution range, calculate the escape efficiency and determine the best escape route; The rescue and escape command and guiding subsystem provides guidance for underground evacuees by combining the calculation results of escape routes, and feeds back the optimal escape route to underground personnel by using the upper computer and the underground voice alarm system, so as to comprehensively improve the escape efficiency and minimize casualties.

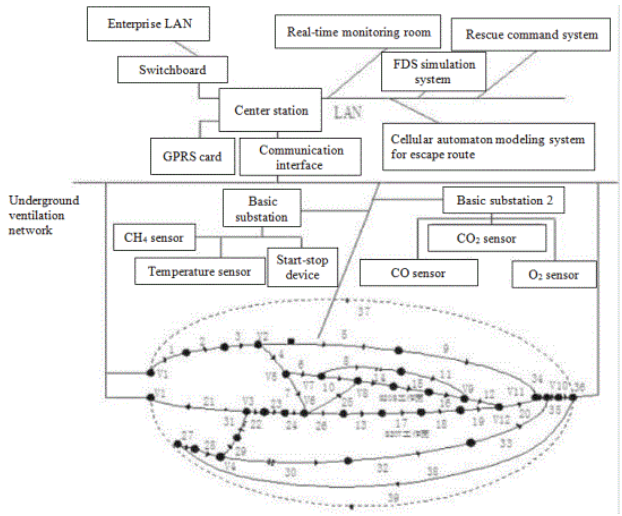

21: 2023/02233. 22: 2023/02/22. 43: 2023/05/19
51: E21F
71: TAIYUAN UNIVERSITY OF TECHNOLOGY
72: CUI Chuanbo, LI Jiangjiang, ZHOU Yuying, JIAO Zhipeng, YUAN Yanwei, SONG Zhiqiang
54: TEMPERATURE-SENSITIVE BURST CYTODERM INHIBITOR FOR PHASE CHANGE MATERIAL AND ITS PREPARATION METHOD
00: -
The invention relates to a temperature-sensitive burst cytoderm inhibitor for phase change material and its preparation method, belonging to the technical field of coal mine goaf safety prevention and control. And the invention can overcome the defects of short service life, poor stability, strong corrosiveness and the like of the existing inhibitor, and the defects of complicated manufacturing process of the temperature-sensitive burst cytoderm inhibitor. First, drill a hole in the shell of the cytoderm, inject a mixed solution of reactant A and inhibitor at the hole, then add a small ball wrapped with reagent B by paraffin, and finally seal the hole with melted sticky plastic. When the temperature of coal mine goaf rises to the critical temperature of coal, the paraffin in the ball of the cytoderm melts, and reacts to generate carbon dioxide gas and salt solution, and the generated salt solution is the inhibitor solution; The generated carbon dioxide gas increases the internal pressure of the ball, breaks through the ball shell, and completely releases the inhibitor solution, and the gas is an inert gas, which reduces the oxygen concentration and inhibits the spontaneous combustion of coal. The invention is simple in structure and easy to operate, and can efficiently produce and process the cytoderm inhibitor.

21: 2023/02236. 22: 2023/02/22. 43: 2023/05/19
51: A61M
71: The Second Hospital of Ningbo
72: Chuntao Tan
54: AN ADJUSTABLE ANTI-LEAKAGE THROAT COVER DEVICE FOR ANESTHESIOLOGY DEPARTMENT
00: -
The invention discloses an adjustable anti-leakage laryngeal mask device for anesthesiology department, belonging to the technical field of laryngeal mask for anesthesiology department. The invention comprises a laryngeal cover body, the top surface of the laryngeal cover body is provided with a fixed component, the top of the laryngeal cover body is connected with a pipe, the surface of the pipe is covered with a sliding sleeve. A rotating mechanism is arranged on both sides of the sliding sleeve, and the side of the rotating mechanism is connected with a flexible belt, and the end of the flexible belt is connected with a connecting component. By setting a fixed component, the sliding sleeve and laryngeal mask body can be connected and positioned, and the laryngeal tube and laryngeal mask body can be inserted into the oral cavity of the patient and fixed firmly through the elastic soft belt, so that the overall structure has higher sealing property and better anti-leakage effect. By setting the connecting component, the elastic soft belt on one side passes through the through slot of the booth, and the elastic soft belt can be adjusted to the appropriate elastic length and positioned, so that the tightness can be adjusted better and the use comfort is higher.

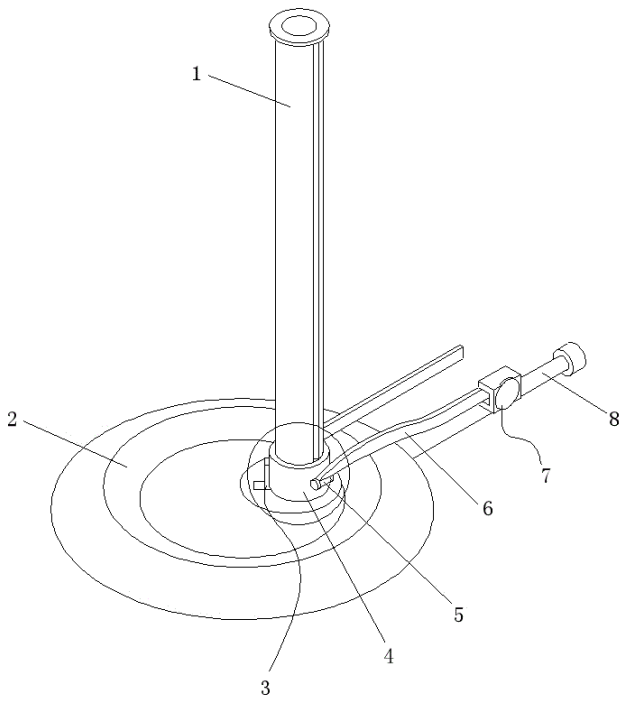

21: 2023/02242. 22: 2023/02/22. 43: 2023/05/16
51: C09K
71: Dr. Raj Kumar Arya, Dr. George D. Verros, Devyani Thapliyal, Jyoti Sharma, Avinash Chandra
72: Dr. Raj Kumar Arya, Dr. George D. Verros, Devyani Thapliyal, Jyoti Sharma, Avinash Chandra
54: A METHOD FOR MINIMIZING RESIDUAL SOLVENT IN POLYMERIC COATINGS
00: -
The present disclosure relates to a method for minimizing residual solvent in polymeric coatings. The aims of the present disclosure is to provide 13 heuristics that are provided on the basis of literature experiment and simulations results for binary, ternary, quaternary coatings for mono or multipolymer cases with and without surfactant and plasticizers. The heuristics proposed in the present disclosure take into account both the problems with drying process equipment design and the problem with selecting process conditions. The proposed heuristics can be used for minimizing coating residual solvent in industrial processed leading to a more rational design of both drying process and polymeric coatings.

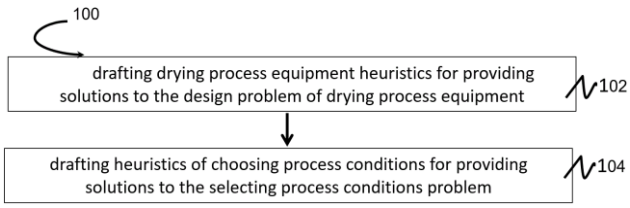

21: 2023/02243. 22: 2023/02/22. 43: 2023/05/16
51: A61K
71: Dr.Punniyakoti Veeraveedu Thanikachalam, A.R.Abdul Rasheed, Prof. (Dr.) T.Balasubramanian, Darla Raju, Raj Kumar Tiwari, Vijay Kumar Sharma, Dr. Parthiban S, Dr. Karthikeyan M, Saurabh Sharma, Deepesh Lall
72: Dr.Punniyakoti Veeraveedu Thanikachalam, A.R.Abdul Rasheed, Prof. (Dr.) T.Balasubramanian, Darla Raju, Raj Kumar Tiwari, Vijay Kumar Sharma, Dr. Parthiban S, Dr. Karthikeyan M, Saurabh Sharma, Deepesh Lall
54: A COMPOSITION AND METHOD FOR PREPARING GLIPIZIDE MATRIX TABLET AND EVALUATING EFFICIENCY OF PLASTIC POLYMER
00: -
A composition and a method for preparing Glipizide matrix tablet and evaluating efficiency of plastic polymer, comprises of: mixing 8-12mg of Glipizide, 5-25mg of hydroxypropyl methylcellulose (HPMC) K-15M, 5-25 mg of Polyvinylpyrrolidone (PVP) k-30 and 86-126mg of Microcrystalline cellulose (MCC) to prepare a formulation; grinding 2mg each of talcum powder (TALC) and magnesium stearate for 4-7 minutes to prepare a powder; adding the powdered magnesium stearate and the TALC to the formulation and mixing for 2 minutes to prepare a blend; compressing the blend into at least a tablet by rotary tablet compression machine to prepare the matrix tablets; and adding 80-120mg of an active ingredients Diltiazem hydrochloric acid (HCl), and 100-300mg of a polymer Kollidon SR to the prepared matrix tablets.

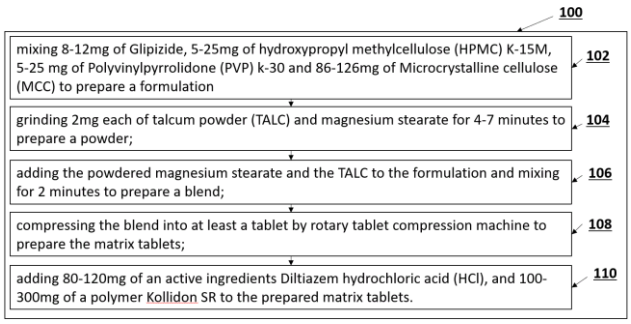

21: 2023/02244. 22: 2023/02/22. 43: 2023/05/16
51: G06F
71: National Institute of Technology Patna, India, Ajay Kumar, Kumar Abhishek, Abhay Kumar
72: Ajay Kumar, Kumar Abhishek, Abhay Kumar

54: A MALWARE DETECTION SYSTEM USING DEEP LEARNING AND MACHINE LEARNING

00: -

A malware detection system (100), wherein the system (100) comprises of: a data collection module (102) for collecting a plurality of data from at least a source; a pre-processing module (104) connected to the data collection module (102) for removing unwanted features from the collected plurality of data, wherein packet payload is removed during pre-processing; a feature extraction module (106) connected to the pre-processing module (104) for selecting at least a feature using a machine learning technique; a feature reduction module (108) connected to the feature extraction module (106) for reducing data size of the selected feature by expelling known data required to identify the malware; and a malware detection module (110) connected to the feature reduction module (108) for detecting suspicious behavior to detect a malicious data using machine learning technique.

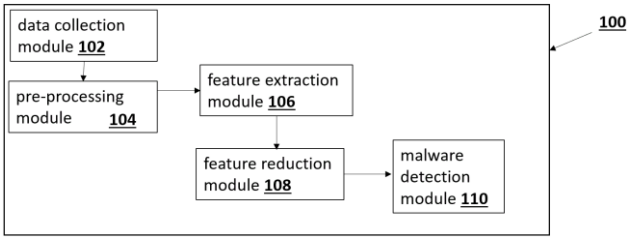

21: 2023/02245. 22: 2023/02/22. 43: 2023/05/09
51: A61K
71: HUNAN ACADEMY OF CHINESE MEDICINE
72: ZHOU, Rongrong, XIE, Yi, ZENG, Hongliang

54: THE INVENTION RELATES TO A GYNECOLOGICAL GEL AS WELL AS A PREPARATION METHOD AND APPLICATION THEREOF

00: -

The invention discloses a gynecological gel as well as a preparation method and application thereof, and belongs to the technical field of medicines. The gynecological gel is prepared from the following raw materials in parts by weight : 1-20 parts of rhizoma polygonati polysaccharide, 1-20 parts of poria cocos polysaccharide, 10-20 parts of carbomer 940, 30-100 parts of aloe gum, 150-250 parts of glycerol, 0.1-10 parts of cinnamon volatile oil, 0.1-10 parts of houttuynia cordata volatile oil, 0.1-10 parts of clove volatile oil, 10-20 parts of L-menthol, 10-20 parts of lactobacillus rhamnosus, 0.1-10 parts of ethylparaben, 20-80 parts of 95% ethanol and 150-250 parts of water. The gynecological gel prepared by the invention has obvious bacteriostatic and anti-inflammatory effects, and is suitable for industrial popularization and application.

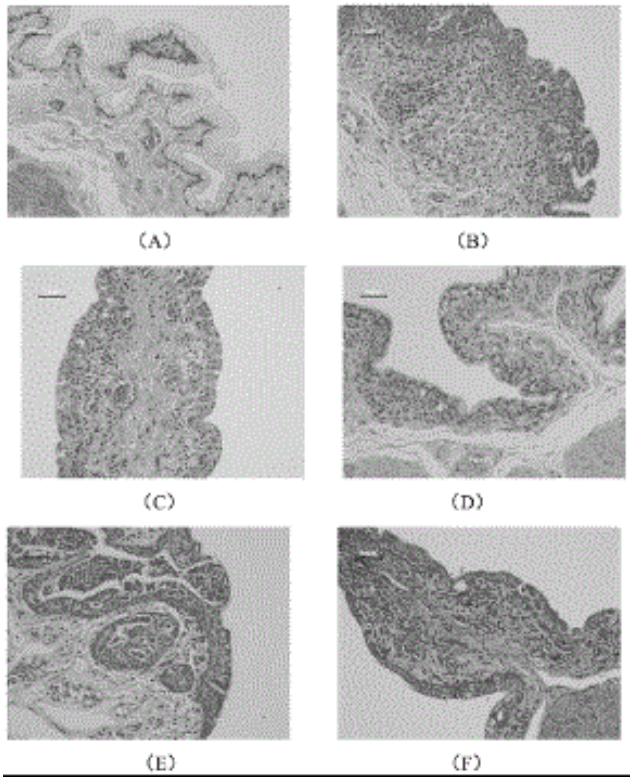

21: 2023/02246. 22: 2023/02/22. 43: 2023/05/16
51: A61K
71: Dr. Kuntal Das, Darla Raju, Manjunath U Machale, Karthik.R, Dr. Shadma Wahab, Dr. Avneet Gupta, Dr. Vikneswari A, Dr. K.P.Jaiganesh, Dr. A.Thanga Thirupathi, Dr. Niladri Maiti

72: Dr. Kuntal Das, Manjunath U Machale, Karthik.R, Darla Raju, Dr. Shadma Wahab, Dr. Avneet Gupta, Dr. Vikneswari A, Dr. K.P.Jaiganesh, Dr. A.Thanga Thirupathi, Dr. Niladri Maiti

54: A PROCESS TO PREPARE EFFERVESCENT TABLETS OF FAMOTIDINE AND A COMPOSITION FOR THE SAME

00: -

The present disclosure relates to a process to prepare effervescent tablets of famotidine and a composition for the same. In the present disclosure, effervescent tablets are prepared by using already used therapeutic drug called famotidine that is used to prevent and treat heartburn due to acid indigestion and sour stomach caused by eating or drinking certain foods or drinks, for increasing the absorption and onset of action. The prepared effervescent tablets of famotidine contain Citric acid, Tartaric acid, Sodium bicarbonate, Sodium carbonate as a suitable drug carrier systems for delivery of Famotidine. The preparation of tablets is carried out by employing a direct compression method that uses single punch tablet machine for producing the tablets where each tablet has a weight of 300 mg and diameter of 9mm.

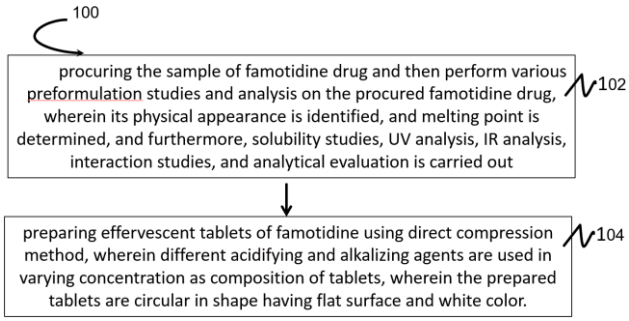

21: 2023/02247. 22: 2023/02/22. 43: 2023/05/09

51: G06Q

71: BEIJING NORMAL UNIVERSITY

72: Wei YANG, Xianting FU, Baoshan CUI, Zhifeng YANG, Xuan WANG, Dan LIU

54: AN INTEGRATED RIVER AND LAKE ECOLOGICAL WATER DEMAND ACCOUNTING METHOD ORIENTED IN THE FUNCTION EXERTION OF THE TRANSITION ZONE

00: -

The present invention discloses an integrated river and lake ecological water demand accounting method oriented in the function exertion of the transition zone, relates to the technical field of ecological water demand, comprising the following specific steps: Determining the transition zone boundary and obtaining the demarcation results; Calculating an ecological water demand index of said transition zone in combination with the demarcation results; Performing a quantitative calculation on the food web structure of the said transition zone; Obtaining a response curve according to the response relationship between the ecological water demand index of the said transition zone and the food web structure of the transition zone; Determining the ecological water demand index range of the said transition zone through the maximum value of the response curve, and further obtaining the river flow and the lake water level. When the method of the present invention is used for integrated accounting of the ecological water demand, the problems that flow and water level are not considered, hydrology and ecology are not matched and water quantity and water quality are not coupled in integrated accounting of the ecological water demand of river and lake water systems can be cooperatively solved.

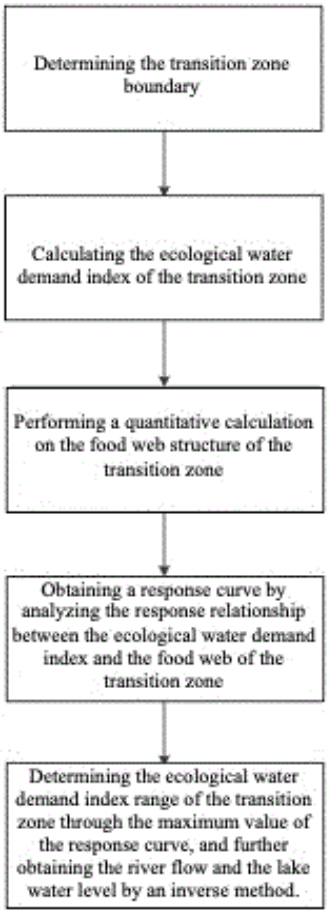

21: 2023/02248. 22: 2023/02/22. 43: 2023/05/16
51: G06F
71: SAI VIDYA INSTITUTE OF TECHNOLOGY, DR. SHANTAKUMAR B PATIL, NACHIKETH N, VINAY DATTATRAY BHAT, GANESH SHANKAR HEGDE, SACHIN R
72: DR. SHANTAKUMAR B PATIL, NACHIKETH N, VINAY DATTATRAY BHAT, GANESH SHANKAR HEGDE, SACHIN R
54: A SYSTEM FOR REAL-TIME FACE MASK DETECTION, HEALTH CHECK, AND SANITIZATION
00: -
The present invention generally relates to a system for real-time face mask detection, health check and sanitization comprises a face recognition processor for identifying a person and recognizing his/her face to determine whether or the person is wearing a mask or not; a control unit for generating a notification message right away to refuse the entry when the person is not wearing the mask; a non-contact temperature sensor activated by the control unit for checking the body temperature of the person if the particular person is wearing the mask; an automatic hand sanitizer dispensing device for dispensing the hand sanitizer automatically if the temperature of the body is detected below 100F; and an electric door lock assembly actuated by the control unit for opening a door to allow entry into the premises upon dispensing the hand sanitizer.

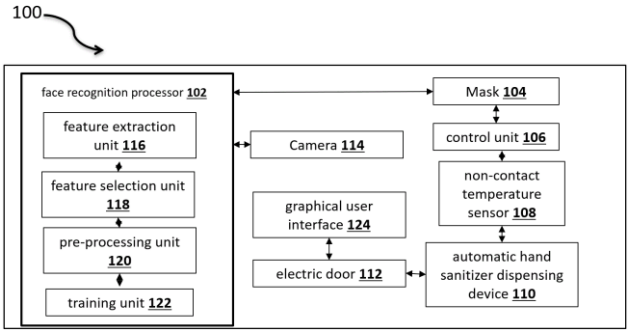

21: 2023/02249. 22: 2023/02/22. 43: 2023/05/09
51: G08G
71: ZHEJIANG UNIVERSITY OF SCIENCE & TECHNOLOGY
72: QIANG, Fangfang, ZHONG, Haiwei, LI, Kecheng, ZHONG, Bolin, LI, Ziqing, YE, Ruyu
54: PREDICTION METHOD AND SYSTEM OF VISUAL SALIENCY IN COMPLEX TRAFFIC
00: -
The invention discloses a visual saliency prediction method and system under complex traffic, which is applied to the technical field of visual saliency prediction. The specific steps include: extracting the spatial features of video frame images and the static target feature map containing the region of interest, obtaining the dynamic target feature map by using the static target feature map, and extracting the electroencephalogram;The dynamic target feature map was fused with electroencephalogram to obtain the attention fusion feature.The dynamic time sequence information and attention fusion features extracted and the correlation between spatial features and attention fusion features were used to train the pre-constructed driver attention prediction network model.The driver's attention prediction network model after training was used to predict the driver's attention region.The invention solves the problem of insensitivity to small targets such as traffic signs and traffic lights in the prior art, and effectively improves the accuracy of driver.

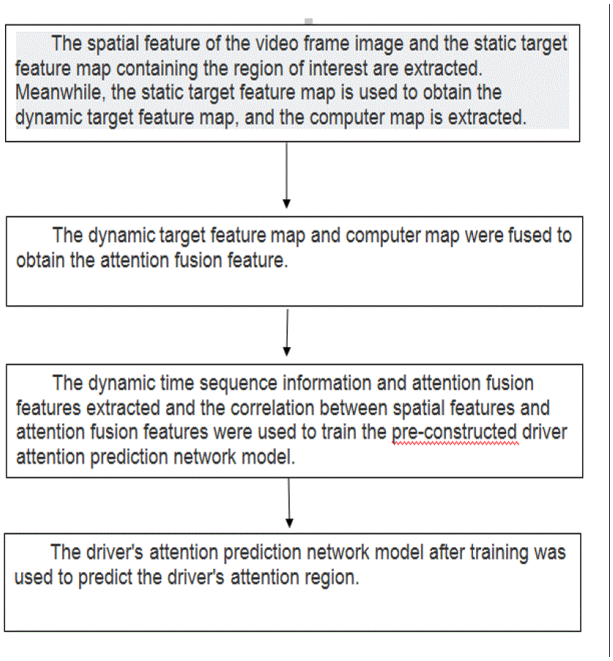

21: 2023/02250. 22: 2023/02/22. 43: 2023/05/16
51: C12P
71: Pondicherry University, Navnit Kumar Ramamoorthy, Venkateswara Sarma Vemuri, Kabilan Subash Chandra Bose, Revanth Babu Pallam, Sudha Rani Sadras, Vinoth Vengadesan, Renganathan Sahadevan
72: Navnit Kumar Ramamoorthy, Venkateswara Sarma Vemuri, Kabilan Subash Chandra Bose, Revanth Babu Pallam, Sudha Rani Sadras, Vinoth Vengadesan, Renganathan Sahadevan

54: A SYNTHETIC MULTI-GENE CONSTRUCT FOR THE CO-EXPRESSION OF ALCOHOL DEHYDROGENASE 1 (ADH1), 2-DEOXY-D-RIBOSE-5-PHOSPHATE ALDOLASE (DERA), AND 2-ENOATE REDUCTASE

00: -

The present disclosure relates to a synthetic multi-gene construct for the equimolar co-expression of Alcohol dehydrogenase 1 (ADH1), 2-Deoxy-d-ribose-5-phosphate aldolase (DERA), and 2-enoate reductase. P2A sequences, which mediate ribosomal skipping during translation, are incorporated into the construct's architecture, between each gene, to make it easier for individual proteins to be separated after translation. Additionally, each gene has a poly-histidine fusion tag sequence to facilitate downstream processing of the synthesized recombinant proteins using immobilized metal affinity chromatography. The construct, when cloned into appropriate shuttle hosts, can facilitate both intracellular and secretory expression of the proteins of interest in Pichia pastoris recombinant hosts. Additionally, the individual genes can be amplified using PCR for individual recombinant expression, together with their poly-histidine fusion tags, using suitable primers. The synthetic construct may find applicability in several industries focusing on in-vitro bio-transformation processes.

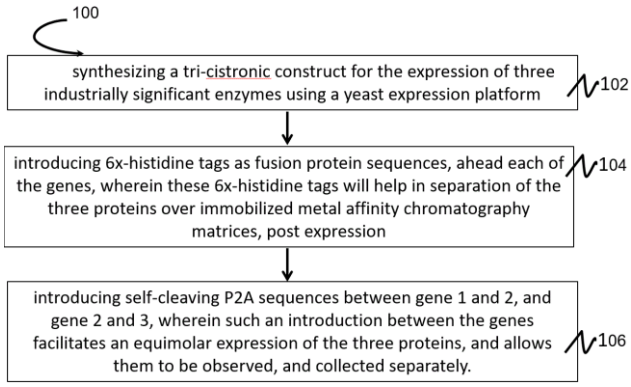

21: 2023/02251. 22: 2023/02/22. 43: 2023/05/09
51: A01G
71: SHANDONG INSTITUTE OF POMOLOGY
72: DONG, Xiaomin, ZHANG, Anning, LI, Guixiang, LI, Miao, GAO, Xiaolan, GONG, Qingtao

54: ELECTRIC FOUR-MAIN-BRANCH BENDING ANGLE SHAPER FOR FRUIT TREE SAPLINGS

00: -

The present utility model relates to the technical field of fruit tree cultivation, in particular to an electric four-main-branch bending angle shaper for fruit tree saplings. The bending angle shaper includes a central disc, a power supply, an angle adjusting device and four connecting rod groups, where the central disc includes an upper central disc and a lower central disc, which are fixedly connected to each other, and the central disc is of a hollow structure; the power supply is arranged in the central disc and is electrically connected to the angle adjusting device; the angle adjusting device includes a motor arranged in the central disc, a controller, and an adjusting knob arranged on an upper surface of the central disc, where the motor drives four pushing retraction modules, and the motor, the pushing retraction modules and the adjusting knob are electrically connected to the controller; and each connecting rod group includes an upper connecting rod, a lower connecting rod and a branch clamp, where the branch clamp is a long-strip-shaped

branch clamp; one end of the upper connecting rod is connected to one pushing retraction module, and the other end of the upper connecting rod is hinged to an upper end of the branch clamp; one end of the lower connecting rod is fixedly connected to the lower central disc, and the other end of the lower connecting rod is hinged to a lower end of the branch clamp. The bending angle shaper according to the present utility model is high in bending angle shaping efficiency, convenient to use, and capable of reducing material and labor costs.

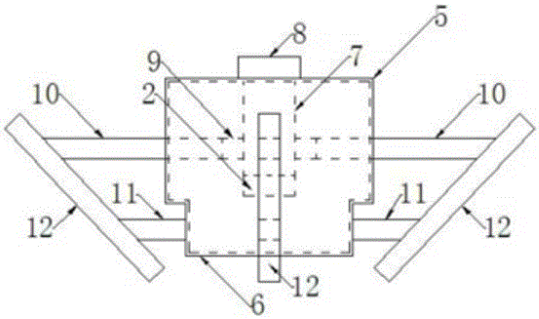

21: 2023/02252. 22: 2023/02/22. 43: 2023/05/16
51: A01C
71: SAI VIDYA INSTITUTE OF TECHNOLOGY, Dr. Vikramathithan A C, Prof. Pavan Kumar E, Shravan M C, Ashok Kumar S, Geetha S, Akanksha Venkatesh V B
72: Dr. Vikramathithan A C, Prof. Pavan Kumar E, Shravan M C, Ashok Kumar S, Geetha S, Akanksha Venkatesh V B
54: A SMART CROP RECOMMENDATION SYSTEM AND METHOD USING MACHINE LEARNING
00: -
The smart crop recommendation system using machine learning comprises a data input device having a plurality of sensing nodes for collecting a set of environmental and soil parameters; a data pre-processor for removing noise, retrieving the patterns within the data, detecting the outliers or anomalous events, and finding relations among the parameters; a data-splitting processor for splitting the data into one or more of the train, test, or validation, wherein the data is divided into two subsets including training/validation, in which the training set is used to fit the model and validation set for the evaluation; a model training processor for training a machine learning model using an XG Boost technique; and a controlling unit interfaced with the machine learning model for generating a report suggesting a suitable crop based on the values taken by the sensors based on the current weather situation and the soil capacity.

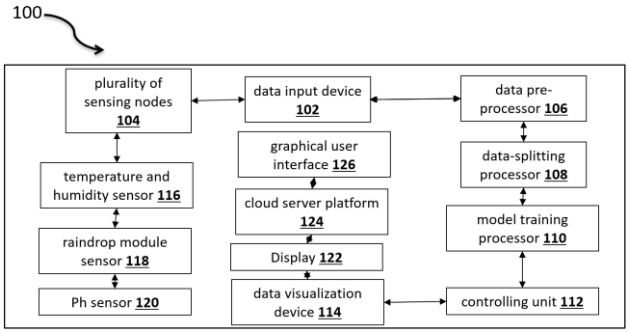

21: 2023/02253. 22: 2023/02/22. 43: 2023/05/09
51: A01G
71: SHANDONG INSTITUTE OF POMOLOGY
72: DONG, Xiaomin, ZHANG, Anning, LI, Guixiang, LI, Miao, GAO, Xiaolan, GONG, Qingtao
54: THREE-MAIN-BRANCH BENDING ANGLE SHAPER FOR FRUIT TREE SAPLINGS
00: -
The present utility model relates to the technical field of fruit tree cultivation, in particular to a three-main-branch bending angle shaper for fruit tree saplings. The bending angle shaper includes a central disc, a length adjuster, a central rotary rod and three connecting rod groups, where the central disc includes an upper central disc and a lower central disc, which are fixedly connected to each other, the central disc is of a hollow structure, and a threaded hole is formed in the upper surface of the upper central disc; the length adjuster is a big-end-up circular truncated cone, an upper surface of the length adjuster is fixedly connected to a bottom end of the central rotary rod, the central rotary rod is provided with an external thread and is threadedly connected in the threaded hole, and three sliding rails are arranged on a side surface of the length adjuster; and each connecting rod group includes an upper connecting rod, a lower connecting rod and a branch clamp, where the branch clamp is long-strip-shaped and provided with an angle dial; one end of the upper connecting rod is clamped with a sliding rail on the length adjuster, and the other end of the upper connecting rod is hinged to an upper end of the branch clamp; one end of the lower connecting rod is fixedly connected to the lower central disc,

and the other end of the lower connecting rod is hinged to a lower end of the branch clamp. The bending angle shaper according to the present utility model is high in bending angle shaping efficiency, convenient to use, and capable of reducing material and labor costs.

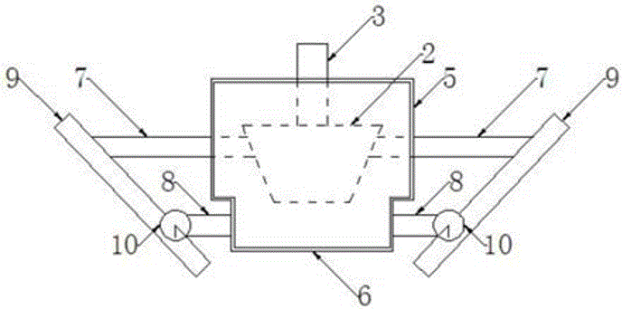

21: 2023/02254. 22: 2023/02/22. 43: 2023/05/09
51: C02F
71: WUHU INSTITUTE OF TECHNOLOGY
72: WU, Kang, WANG, Yize, HU, Ming, WANG, Yangyang, FANG, Lu, WU, Yunyun, PEI, Jiajia, LI, Chang, ZHANG, Jiangshuo, XUE, Mingxing, ZHU, Zihui
33: CN 31: 202210851157.X 32: 2022-07-20
54: ELECTROCHEMICAL WATER TREATMENT SYSTEM FOR ELECTROLYTIC TANK
00: -
The present invention relates to the technical field of water treatment, and particularly relates to an electrochemical water treatment system for an electrolytic tank. The system includes a tank body. A conveying mechanism is mounted on the tank body, a collecting mechanism is mounted on the inner side of the bottom of the tank body, a locking mechanism is connected to the collecting mechanism, a sealing mechanism is mounted on the collecting mechanism, a protecting mechanism is mounted in the tank body, a cleaning mechanism is mounted on the tank body, and a scraping mechanism is mounted in the tank body. Water is conveyed by the conveying mechanism and is prevented from reflowing. With the cooperation of the collecting mechanism and the locking mechanism, it contributes to storing sedimented impurities after water treatment and it is convenient to clean the impurities periodically. Moisture is less liable to overflow through the sealing mechanism. The collecting mechanism will not be extracted when water is conveyed as the conveying mechanism drives the protecting mechanism. Under the action of the cleaning mechanism, cleaning of floating matters is facilitated, and the scraping mechanism is driven to better scrape and clean the sedimented impurities.

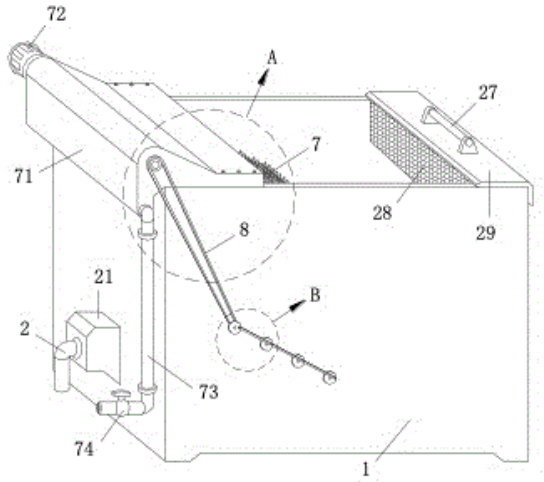

21: 2023/02255. 22: 2023/02/22. 43: 2023/05/09
51: C11D
71: WUHU INSTITUTE OF TECHNOLOGY
72: YAO, Youzhi, YAO, Tiancheng, WANG, Xing, YE, Zhou, WU, Kang, ZHANG, Zhongliang, HUA, Fei, LI, Chao, SI, Xiandong, QIN, Yongxing
54: PREPARATION AND CATALYTIC APPLICATION METHOD OF NANO COMPOSITE POWDER
00: -
The disclosure discloses a preparation and catalytic application method of a nano composite powder. The morphology-controllable cuprous oxide/graphene nano powder functional composite is prepared using hydrazine hydrate as a reducing agent and copper sulfate as a raw material. By controlling reaction conditions to be different, it is found through SEM (scanning electron microscopy) characterization that the cuprous oxide is dispersed on the surface of the graphene in the shape of spindle and square. Under visible light irradiation, the cuprous oxide/graphene nano composite in both of the two morphologies has good photocatalytic degradation performance for wastewater containing organic dyes.

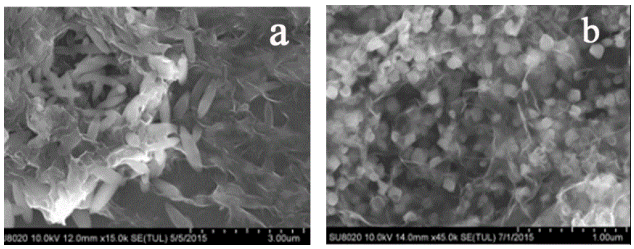

21: 2023/02256. 22: 2023/02/22. 43: 2023/05/09
51: C02F
71: WUHU INSTITUTE OF TECHNOLOGY
72: YAO, Youzhi, YAO, Tiancheng, WANG, Xing, YE, Zhou, WU, Kang, ZHANG, Zhongliang, HUA, Fei, LI, Chao, SI, Xiandong, QIN, Yongxing
33: CN 31: 202210854104.3 32: 2022-07-20
54: ENVIRONMENTAL-FRIENDLY WASTEWATER TREATMENT DEVICE
00: -
The present invention relates to the technical field of wastewater treatment devices, and particularly relates to an environmental-friendly wastewater treatment device. The environmental-friendly wastewater treatment device comprises a tank body. The tank body is internally provided with a circulating mechanism, a back-washing mechanism is connected to the circulating mechanism, a centrifugal mechanism is connected between the back-washing mechanism and the circulating mechanism, a descaling mechanism is connected to one side of the centrifugal mechanism, the circulating mechanism drives the descaling mechanism, and one side of the centrifugal mechanism is provided with an opening and closing mechanism. By arranging the circulating mechanism and the back-washing mechanism, it is convenient to back-wash a filter assembly while filtering wastewater without manual periodical treatment, thereby avoiding blockage. By arranging the centrifugal mechanism, it is convenient to centrifugally dehydrate and purify a mixture of sewage and waste residues, so that the frequency of manually dumping garbage is reduced, and the manual labor intensity is reduced. By arranging the opening and closing mechanism, it is convenient to synchronously open and close a channel for collecting residues synchronously following the starting frequency of the centrifugal mechanism, so as to prevent the channel from being opened for a long time, so that affection to the indoor environment due to peculiar smells blowing out is reduced.

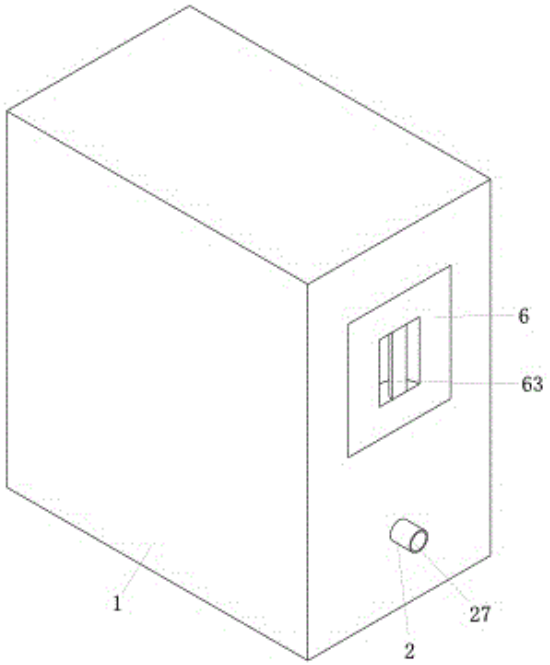

21: 2023/02257. 22: 2023/02/22. 43: 2023/05/09
51: B09B
71: WUHU INSTITUTE OF TECHNOLOGY
72: HUA, Fei, CHEN, Qianqian, WU, Kang, JI, Shuangshuang, YE, Zhou, JIA, Qina, YAO, Youzhi, FAN, Mengyu, LI, Yaqi, ZHU, Zihui
33: CN 31: 202210881247.3 32: 2022-07-26
54: TREATMENT DEVICE FOR OIL-CONTAINING SOLID WASTE
00: -
The present disclosure relates to the technical field of treatment of oil-containing solid wastes, and specifically relates to a treatment device for an oil-containing solid waste. The device includes a finely pulverizing box, one side of the finely pulverizing box is provided with a treatment box, the inside of the finely pulverizing box is provided with a finely pulverizing mechanism, and the inside of the treatment box is provided with a layering mechanism. Through arrangement of the finely pulverizing mechanism, convenience is provided for pulverization and refinement of oil sludge. Meanwhile, a water mixture is injected, so that the passability is improved. Through arrangement of the layering mechanism, a gas mixed medicament can be delivered into a treatment tank through a stirring rod and then fully mixed, so that the separation of bubbles is accelerated. Through arrangement of a dredging mechanism, a pipe for delivering sludge is

obliquely inserted into the bottom end of the treatment tank, so that sand settled to the bottommost end of the treatment tank can be delivered and discharged. The top end of a sludge discharge pipe is higher than the horizontal height of the treatment tank, so that a mixed liquid can be prevented from being discharged when the sludge is discharged. During dredging, two conveyor belts are synchronously driven to operate, and the sludge that is settled to the bottom end of the tank body and is not likely to move is actively delivered and gathered, so that a spiral rod can effectively contact the sludge for delivery, and a better dredging effect is achieved.

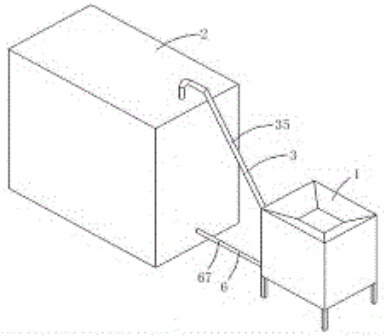

21: 2023/02258. 22: 2023/02/22. 43: 2023/05/09
51: E21B
71: WUHU INSTITUTE OF TECHNOLOGY
72: YE, Zhou, LV, Danya, GE, Wen, WANG, Yangyang, ZHANG, Zhongliang, FAN, Mengyu, LI, Yaqi, ZHU, Zihui

54: UNDERWATER DEPTH-CONTROLLABLE SOIL SAMPLER

00: -

This application discloses an underwater depth-controllable soil sampler. The sampler includes an outer housing, flow guide fins, cables, cable protective tubes, an isolation plate, a mud pump, a mud pumping tube, electric push rods, fixing assemblies, a protective drive assembly, and a sampling assembly. The cables for hoisting the sampler are fixedly connected to a bottom of the outer housing. Each of the cable protective tubes for placing the cables is fixedly connected to one side of corresponding one of the cables. The plurality of flow guide fins distributed in a ring array are fixedly connected to a surface of the outer housing. The flow guide fins are of an inverted triangular structure. The isolation plate is fixedly connected to an inner cavity of the outer housing. Driving motors are started, and power is provided by the driving motors to drive driving racks to move in a vertical direction, to drive a sampling shell located at bottoms of the driving racks to move down until the sampling shell is inserted into an underwater ground surface by a specified depth, so as to control a sampling depth.

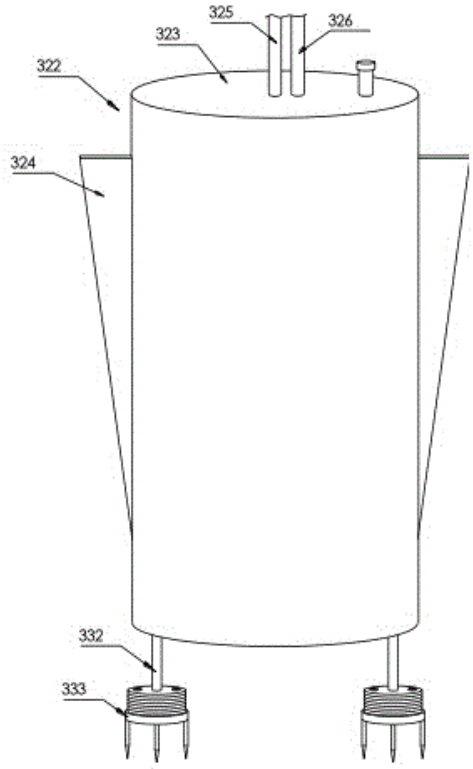

21: 2023/02259. 22: 2023/02/22. 43: 2023/05/09
51: C10L
71: WUHU INSTITUTE OF TECHNOLOGY
72: HUA, Fei, ZHANG, Mingxiang, ZHANG, Wanchun, WU, Yunyun, ZHANG, Zhongliang, JIA, Qina, YAO, Youzhi, FAN, Mengyu, LI, Yaqi, ZHU, Zihui
33: CN 31: 202210691594.X 32: 2022-06-17

54: BIOLOGICAL DESULFURIZATION DEVICE FOR BIOGAS AND DESULFURIZATION METHOD

00: -

The present disclosure relates to the technical field of biological desulfurization of biogas, and specifically relates to a biological desulfurization device for biogas and a desulfurization method. The device includes a box body, and further includes at least two groups of desulfurization parts, a baffle component, and at least two water pumps. The

lower end of the box body is provided with a gas inlet, a water inlet, and a water outlet. The desulfurization part includes a frame body, the inside of the frame body is provided with a partition plate, and two sides of the partition plate are provided with porous suspension balls. The suspension balls are filled with an immobilized filler, and the frame body is in transmission connection with a driving unit. The baffle component includes elastic telescopic parts arranged on the upper and lower sides of the frame body, the lower end of the bottommost elastic telescopic part is provided with a first through groove, and the upper end of the topmost elastic telescopic part is provided with at least two second through grooves. The at least two water pumps are installed at the at least two second through grooves respectively, and the two water pumps are used for pumping water in opposite directions. According to the present disclosure, elemental sulfur is loosened and rinsed down through the combined action of constant movement of the suspension balls and upward and downward rinsing of a water flow, and the effect of cleaning the filler is improved.

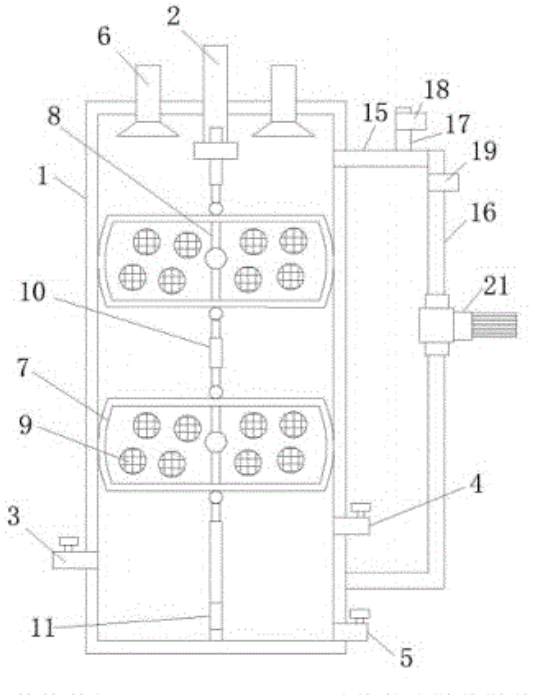

21: 2023/02260. 22: 2023/02/22. 43: 2023/05/16
51: F25B
71: Dr. Manoj Kumar Ghosal, Smruti Rekha Sahoo, Sourav Ghosal, Srabani Ghosal
72: Dr. Manoj Kumar Ghosal

54: A ZERO ENERGY COOL CHAMBER SYSTEM

00: -

A zero-energy cool chamber system (100), comprises of: a double walled structure (102) comprising a cavity in between two walls (102a) filled with sand forming the cooling chamber; a lid (104) comprises a frame (104a) covered with a grass mat (104b) to cover the cavity (102a), wherein the lid (104) coincides exactly on the cavity for enclosing the chamber; a gravity fed micro-dripper (106) installed along periphery of the gap between the double walled structure (102) connected to a water source (108) for saturating the sand and double walled structure (102) with water at least twice a day, a perforated storage container (110) positioned inside the double walled structure (102) for storing fresh vegetables and fruits; and a temperature and humidity meter (112) embodied inside the cavity (102a) for measuring the temperature and humidity of air inside the chamber where vegetables and fruits are stored for preservation purposes.

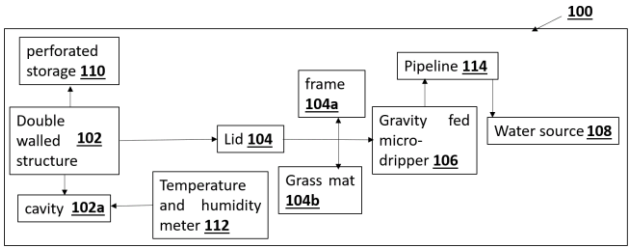

21: 2023/02261. 22: 2023/02/22. 43: 2023/05/16
51: C05F
71: Ksh. Robert Singh, Saurabh Chaudhury, Somen Debnath, Subir Datta, Subhasish Deb, Dalton Meitei Thounaojam, R.Lalchhanhima, R. Chawngsangpuii, Lalhmingliana, N. Gopil Singh, Mayanglambam Sushilata Devi
72: Ksh. Robert Singh, Saurabh Chaudhury, Somen Debnath, Subir Datta, Subhasish Deb, Dalton Meitei Thounaojam, R.Lalchhanhima, R. Chawngsangpuii, Lalhmingliana, N. Gopil Singh, Mayanglambam Sushilata Devi

54: A CASCADE NETWORK SYSTEM FOR CLASSIFICATION OF RICE GRAIN

00: -

A Cascade Network system (100) for classification of rice grain based on single rice kernel, comprises of: an image acquisition module (102) for collecting a plurality of different varieties of rice; an image segmentation module (104) for partitioning the

collected image into multiple regions to extract region of interest, configured to: select a hue channel upon performing image conversion; removal of unwanted segmented area other than the rice kernel; and filling up of voids in the segmented binary rice kernel image; a feature extraction module (106) for extracting a plurality of features from the segmented images; and a classification module (108) comprises of a neuro-fuzzy cascade network with back-propagation neural network (BPNN) (108a) for classifying the image into a plurality of classes such that each class identifies a variety of rice kernel, wherein output of the BPNN is fed to a Sugeno-type fuzzy inference system (FIS) (108b).

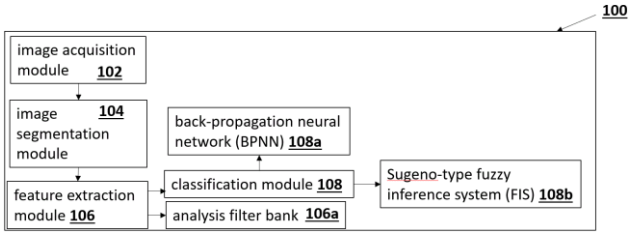

21: 2023/02262. 22: 2023/02/22. 43: 2023/05/16
51: A61K
71: Prof.Manisha Tiwari, Siddharth Gusain, Dr.Dinesh Sharma
72: Prof.Manisha Tiwari, Siddharth Gusain, Dr.Dinesh Sharma

54: METHOD FOR SYNTHESIZING POTENTIAL THERAPEUTIC AGENTS FOR TREATING L-NAME-INDUCED HYPERTENSION AND EVALUATING ITS EFFECT THEREOF

00: -

The method comprises procuring a subject preferably selected from a plurality of rats and dividing into groups thereby giving L-NAME in drinking water to account for a daily intake of 50 mg/kg/body weight; preparing a suspension of different DADS analogs in water; collecting the blood of the subject; removing the buffy coat, enriched in white cells, and washing the remaining erythrocytes at least three times with physiological saline; lysing a known volume of erythrocyte with hypotonic phosphate buffer and separating the hemolysate by centrifuging and estimating enzymatic antioxidants using the supernatant; slicing the heart and aortic tissues into pieces and homogenizing in buffer to get 10% homogenate and centrifuging the homogenate; discarding the obtained supernatant containing crude membranes and centrifuging the remaining supernatant obtain PMS which is used as a source GPx, GR and protein carbonyl; and performing biochemical analysis for evaluating the effect of DADS analogs against L-NAME-induced hypertension.

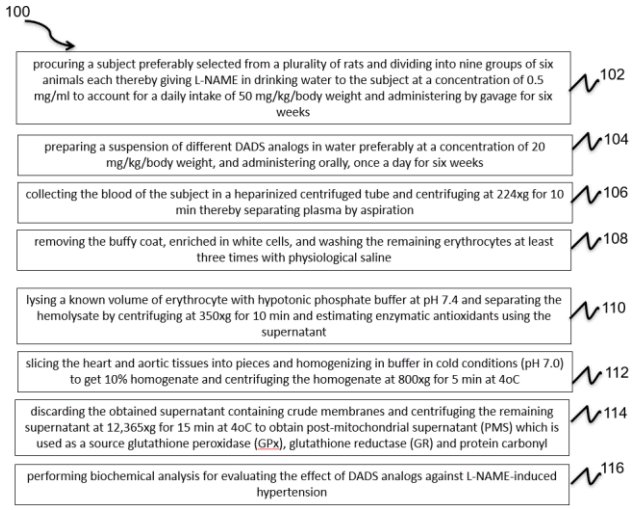

21: 2023/02263. 22: 2023/02/22. 43: 2023/05/16
51: H01L
71: PAUL JOSEPH DANIEL, KOVENDHAN MANAVALAN, DILLI BABU PADMANABAN, MANIMUTHU PERIYASAMY, CHAKRAVARTHY VENKATESWARAN
72: PAUL JOSEPH DANIEL, KOVENDHAN MANAVALAN, DILLI BABU PADMANABAN, MANIMUTHU PERIYASAMY, CHAKRAVARTHY VENKATESWARAN

54: A METHOD FOR ULTRA-FAST FORMATION OF CRO2 AT AMBIENT CONDITIONS

00: -

The present disclosure relates to a method for ultra-fast formation of CrO2 at ambient conditions. In the present disclosure, a single step, self-ignition exothermic combustion reaction between CrO3 and acetone vapor cloud that leads to an ultra-fast formation of CrO2 particles enroute Cr2O3 from CrO3 at ambient conditions. A spray gun assembly is employed for spraying acetone over the flakes of CrO3 particles. The Cr2O3 is inevitably formed over the surface of CrO2 similar to core-shell structure. After the completion of the reaction, the CrO2 is separated from Cr2O3 using various techniques. The quick and easy method of making CrO2 at atmospheric conditions using acetone offers a fresh approach to production and further research of the strategically significant CrO2.

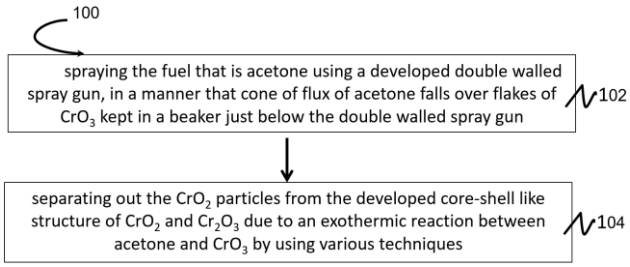

21: 2023/02297. 22: 2023/02/23. 43: 2023/05/19
51: A61P; A61K
71: Ningxia Yikang Hui Medicine Research Institute (Co., Ltd.)
72: CHEN, Kun, CHEN, Renzhi, CHEN, Renxin
54: RADIX ET RHIZOMA NARDOSTACHYOS AND SEMEN ZIZIPHI SPINOSAE SOUND SLEEP GRANULES
00: -
The present invention discloses Radix et rhizoma nardostachyos and Semen ziziphi spinosae sound sleep granules, prepared from the following active pharmaceutical ingredients: Radix et rhizoma nardostachyos, Semen ziziphi spinosae, Cortex albiziae, Radix polygalae, Caulis polygoni multiflori, Rhizoma polygonati, Radix rehmanniae, Fructus Alpiniae Oxyphyllae and dextrin. The sound sleep granules of the present invention are simple in raw material, are free of any chemical additives, and solve the problem that sleep-promoting chemical drugs harm the human body.

21: 2023/02298. 22: 2023/02/23. 43: 2023/05/19
51: A24B
71: Guangdong Tobacco Research Institute, Guangdong Tobacco Shaoguan Co., Ltd
72: WANG, Hang, LIU, Lan, YAO, Yuanhua, WANG, Jun, ZENG, Tao, CHEN, Yongming, ZHAO, Weicai, QIU, Miaowen, HUANG, Yuepeng
54: METHOD FOR IMPROVING BAKING QUALITY OF YUEYAN 1 TOBACCO LEAVES
00: -
Disclosed is a method for improving baking quality of Yueyan 1 tobacco leaves. In the present invention, low tobacco leaves, middle tobacco leave and upper tobacco leaves of Yueyan 1 are baked in different curing barns separately, temperature in the curing barns are slowly increased during a yellowing stage s, and circulating fans used in different baking stages of the yellowing stage, a color fixing stage and a stem drying stage are regulated and controlled, and the whole baking stage is divided into 10 stages; further, the temperature is increased at low speed during the yellowing stage, and the temperature during the yellowing period is controlled below 38.5 degrees Celsius; and finally, Yueyan 1 obtained by baking not only has excellent appearance quality, but also can coordinate internal chemical components of the tobacco leaves, improve sensory evaluation quality of the tobacco leaves and improve economic benefits.

21: 2023/02299. 22: 2023/02/23. 43: 2023/05/19
51: H04L; H04W
71: Institute of Water Resources for Pastoral Area, MWR
72: WANG, Jun, ZHANG, Ruiqiang, LU, Haiyuan, XU, Bing, ZHENG, Hexiang, MIAO, Ping, CAO, Xuesong, QIN, Ziyuan, LI, Heping, TONG, Changfu, WU, Jiabin, LI, Jiankun, BAI, Bater
54: DATA ACQUISITION DEVICE, EVAPOTRANSPIRATION MONITORING SYSTEM AND EVAPOTRANSPIRATION MONITORING METHOD
00: -
The embodiment of the present application provides a data acquisition device, an evapotranspiration monitoring system and an evapotranspiration monitoring method. The data acquisition device includes a vorticity correlation system, a serial port server and a first wireless bridge, wherein the vorticity correlation system is connected to a serial port end of the serial port server, the first wireless bridge is connected to a network port end of the serial port server, and the first wireless bridge is connected to a second wireless bridge of a monitoring center wirelessly. During evapotranspiration monitoring, the vorticity correlation system acquires turbulent flux raw data between the atmosphere and an underlying surface, and transmits the turbulent flux raw data to the monitoring center using the serial port server and the wireless bridges, so that real-time monitoring of evapotranspiration is realized.

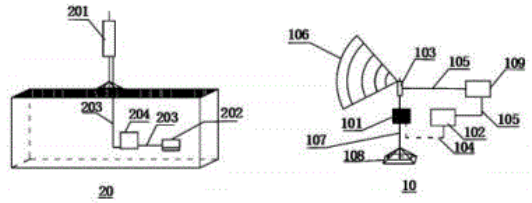

21: 2023/02300. 22: 2023/02/23. 43: 2023/05/18
51: G06F
71: Central South University
72: Shengwen YIN, Xiang LIU, Jian DAI
54: A RANDOM NOISE ANALYSIS METHOD BASED ON SEQUENCE PLANNING SAMPLING POINT TECHNIQUE
00: -
The invention discloses a random noise analysis method based on sequence planning sampling point technique, which comprises the following steps: S1. Establish random finite element model; S2. Establish arbitrary polynomial chaos expansion of the system noise response; S3. Obtain the polynomial basis, generate the Gaussian integral point corresponding to the polynomial basis, and take it as the candidate sample point; S4. Conduct sparse sampling of candidate sample points to obtain sparse sampling points; S5. Calculate the undetermined coefficient of any polynomial chaos response surface; S6. The probability statistical characteristics of the system noise response are solved according to the undetermined coefficient to analyze random noise. The invention adopts the random noise analysis method based on sequence planning sampling point technique, which can effectively improve the computational efficiency and greatly reduce the cycle of product design.

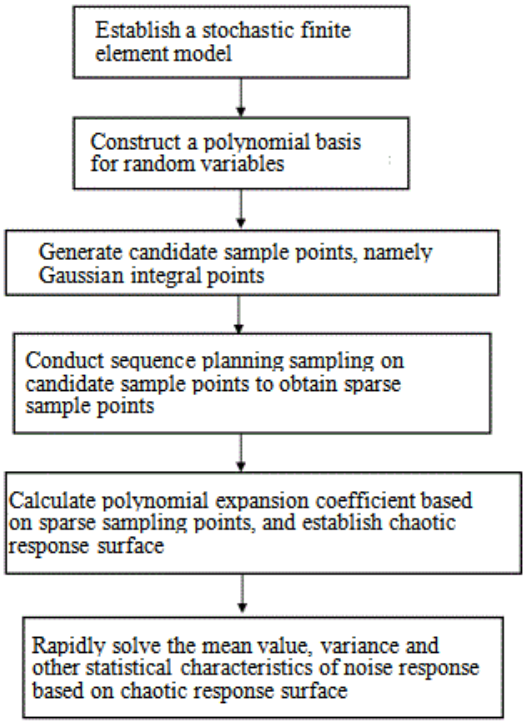

21: 2023/02301. 22: 2023/02/23. 43: 2023/05/18
51: H01B
71: Taiyuan University of Technology
72: Yanqin WANG, Bo LANG, Xuehui ZHANG, Yanru XUE, Weiyi CHEN, Xiaogang WU, Qiang ZHENG
33: CN 31: 2023100436109 32: 2023-01-29
54: THE PREPARATION METHOD OF A FLEXIBLE CONDUCTIVE GEL WITH ANISOTROPIC STRUCTURES AS SENSING PATCH AND ITS APPLICATIONS
00: -
The invention provides a flexible conductive gel with anisotropic structures as sensing patch and its preparation method, which belongs to the technical field of conductive polymer materials. the flexible conductive gel with anisotropic structures as sensing patch provided by the invention includes a hydrogel matrix and conductive nanoparticles uniformly arranged in the hydrogel matrix; The raw materials for preparing the hydrogel matrix are polyvinyl alcohol, crosslinking agent, and water; The conductive nanoparticles are the ferroferric oxide modified MXene. The ferroferric oxide-modified MXene can be aligned along the direction of the magnetic field in a uniform magnetic field without aggregation, forming a more connected electronic motion network. The polyvinyl alcohol containing a

large number of hydroxyl groups is connected with the conductive nanoparticles by hydrogen bonding, so the conductive nanoparticles are well fixed. The anisotropy degree and the anisotropy sensitivity of the conductivity of the anisotropic conductive flexible gel are significantly improved, especially in the orthogonal direction. Different conductivity and sensitivity can be applied to signal monitoring in different scenarios.

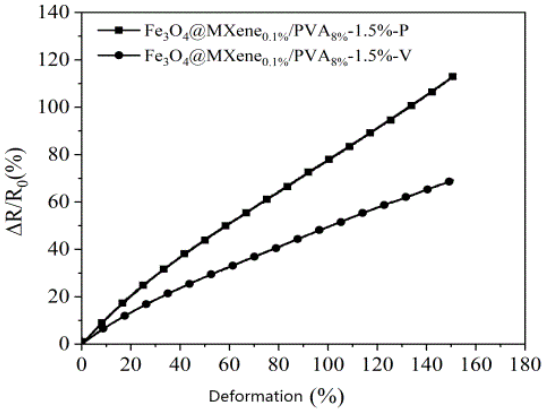

21: 2023/02311. 22: 2023/02/23. 43: 2023/05/18
51: A61K
71: Ren Gaoquan
72: Ren Gaoquan
54: PHARMACEUTICAL COMPOSITION FOR ELIMINATING PARALYSIS AND ANALGESIA AND PREPARATION METHOD THEREOF
00: -
The invention discloses a pharmaceutical composition for eliminating paralysis and analgesia and a preparation method thereof, comprising 9-12 g of gastrodia elata, 6-10 g of licorice, 6-10 g of cinnamon, 5-10 g of myrrh, 1-5 g of semen strychni, 9-15 g of angelica, 6-12 g of pericarpium citri reticulatae, 6-10 g of costusroot, 5-10 g of olibanum, 9-12 g of Ligusticum wallichii, 5-10 g of safflower, 100 g of starch, and appropriate amount of boiled water. The preparation method comprises the following steps: S1) taking gastrodia elata, licorice, cinnamon, myrrh, semen strychni, angelica, pericarpium citri reticulatae, costusroot, olibanum, Ligusticum wallichii, safflower respectively by weight; after drying in the sun, using a pulverizer to make the above components into fine powder; mixing them evenly, and passing through a 100-mesh sieve to obtain a mixed medicinal powder for later use; S2) taking the starch in parts by weight, and fully mixing it with the mixed medicinal powder, then adding an appropriate amount of boiled water, and kneading to form a dough with moderate hardness; S3) processing the obtained mass into pills with a pill making machine; S4) polishing the obtained pills with a polishing machine, and then placing to dry in the shade; S5) after drying the pills in the shade, sterilizing them with ultraviolet rays, putting them in PET bottles, and keeping them sealed to get the finished product.

21: 2023/02314. 22: 2023/02/23. 43: 2023/05/18
51: A01C; A01G; C05G
71: Guangdong Tobacco Research Institute
72: LIU, Lan, WANG, Jun, TIAN, Junling, ZONG, Zhaohui
54: METHOD FOR FERTILIZING FLUE-CURED TOBACCO IN SANDY SOIL FIELD
00: -
The present invention discloses a method for fertilizing flue-cured tobacco in a sandy soil field. The present invention can effectively solve the problem of blind fertilization in the planting process of flue-cured tobacco in the sandy soil field in South China. The fertilizer utilization rate increases by 25.00 percent-40.0 percent compared with that of traditional fertilization, and at the same time, the method improves an aroma sensory quality of the flue-cured tobacco (score increased by 7-9) and increases the content of neutral aroma components of tobacco leaves by 30.0-45.0 ug/Kg, thereby improving the quality of flue-cured tobacco. The method has a good application prospect in the planting process of the flue-cured tobacco in the sandy soil field area of South China.

21: 2023/02321. 22: 2023/02/23. 43: 2023/05/19
51: H02J
71: Hangzhou Dianzi University
72: Huimin GAO, Yi LU, Zhuo HUANG, Yi ZHONG, Ruisheng DIAO
54: A FREQUENCY MODULATION METHOD FOR CONTROLLING THE ENERGY STORAGE OUTPUT
00: -
The present invention discloses a frequency regulation method for controlling the output of energy storage. The present invention includes the following steps: (1) Setting the upper and lower frequency limit values and determining the moment

of energy storage action. (2) When the active deficit occurs in the system and the frequency crosses the limit value, the energy storage starts to participate in the frequency regulation. (3) In the first stage, the disturbance starts at the moment of disturbance to prevent a rapid decline in frequency and meet the peak requirement of transient frequency deviation, inertia and sag control are selected; the control mode is switched to sag control at the moment corresponding to the maximum frequency deviation (4) In the second stage, when the frequency deviation reaches the steady state moment, the sag control is switched to dynamic matrix control to further reduce the frequency deviation. The invention uses inertial sag control and dynamic matrix control to control the energy storage system, which not only meets the peak requirement of transient frequency deviation in the frequency regulation process, but also can play a non-differential frequency regulation effect.

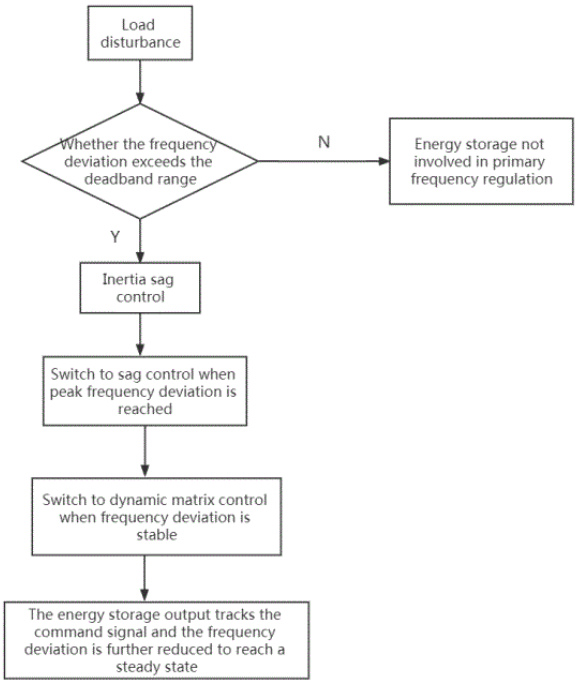

21: 2023/02324. 22: 2023/02/23. 43: 2023/05/19
51: A61K
71: The Second Affiliated Hospital of Shandong University of Traditional Chinese Medicine, Shandong University of Traditional Chinese Medicine
72: XU, Yunsheng, LI, Jie, BU, Shuai, HAN, Cong, ZHAO, Sen, XU, Sai, WANG, Xiaoyue, SHEN, Yingkai

54: TRADITIONAL CHINESE MEDICINE COMPOSITION FOR TREATING DIABETIC GASTROPARESIS AND PREPARATION METHOD THEREOF

00: -

Disclosed are a traditional Chinese medicine composition for treating diabetic gastroparesis and a preparation method thereof. The composition includes 9-15 parts of rhizoma pinelliae, 9-15 parts of rhizoma zingiberis, 9-15 parts of radix scutellariae, 12-18 parts of cortex magnoliae officinalis, 12-18 parts of fructus aurantii immaturus, 12-18 parts of rhizoma coptidis, 15-20 parts of radix codonopsis, 15-20 parts of poria cocos, 12-18 parts of pericarpium citri reticulatae, 9-15 parts of radix scrophulariae, 20-30 parts of raw radix astragali, 15-30 parts of rhizoma dioscoreae, 12-18 parts of rhizoma atractylodis and 12-18 parts of rhizoma atractylodis macrocephalae. The traditional Chinese medicine composition has the effect as follows: pungent drugs have an effect of diverging and promoting qi, while bitter drugs have an effect of reducing diarrhea, both cold drugs and heat drugs are used together, and both tonification drugs and purgation drugs are used.

21: 2023/02325. 22: 2023/02/23. 43: 2023/05/19
51: E02D; E21D
71: China University of Mining and Technology
72: Aimin LI, Fei CHEN

54: A KIND OF SCREW FEEDING DEVICE FOR SLURRY SPRAYING MACHINE

00: -

The invention discloses a screw feeding device for a slurry spraying machine, including a discharging telescopic cylinder, a dosing mechanism, a power structure, a screw feeding mechanism, a conical screw feeding mechanism, a radial dumping mechanism, a telescopic frame, a mobile frame and a turbine transmission mechanism, the mobile frame includes a roller and a connecting shaft, the connecting shaft is provided with a mobile sleeve, the outer surface of the mobile sleeve is fixedly connected to a telescopic frame, the upper part of the telescopic frame is connected to a radial dumping mechanism The radial dumping mechanism includes a material drum, stirring blades

and a material drum cover, the radial dumping mechanism is set on the main shaft of the spiral lifting mechanism, the spiral lifting mechanism includes a stirring shaft, a spiral blade and a spiral shell, the stirring shaft is connected with a transmission gear through the material drum, and a bearing set is set between the transmission gear and the material drum. This invention adopts the above structure of a kind of screw feeding device of slurry spraying machine, which integrates dosing and feeding in one, improves the speed and quality of slurry spraying support, and has the advantages of compact structure, convenient disassembly and assembly, high efficiency and stable slurry composition.

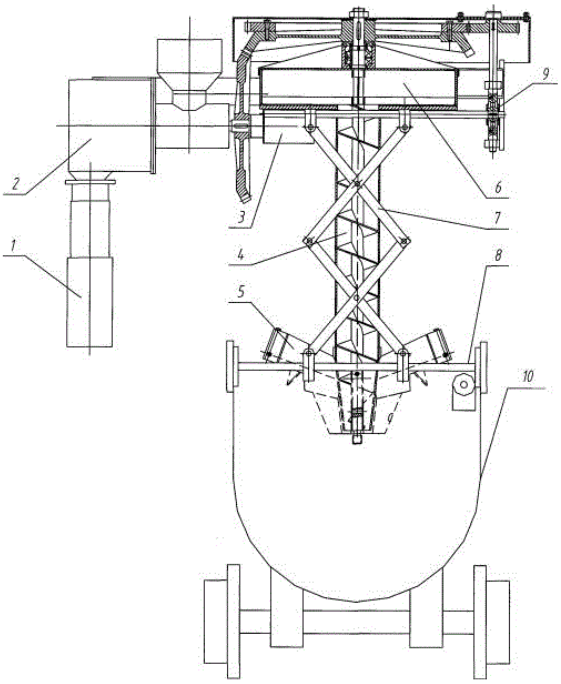

21: 2023/02326. 22: 2023/02/23. 43: 2023/05/19
51: E02F
71: China University of Mining and Technology
72: Aimin LI, Fei CHEN
54: A MATERIAL HANDLING DEVICE FOR UNDERGROUND ROADWAY
00: -
The utility model discloses a material handling device for underground roadway, including a vehicle body. The front end of the vehicle body is equipped with a slewing mechanism, and the slewing mechanism is equipped with a boom system. The boom system is connected with a grab mechanism through a lifting mechanism. The rear end of the vehicle body is equipped with a hydraulic system, and one side of the hydraulic system is equipped with a power device. The boom system comprises a telescopic boom and a four-link system. The four-link system comprises a base. The base is fixed with a support. The upper end of the support is hinged with the connecting rod. The middle end of the support is connected with the boom. The lower end of the support is hinged with the oil cylinder. The lower end of the lower boom of the telescopic boom is fixed with a telescopic boom support. The lower side of the telescopic boom support is hinged with the connecting rod, the other side is hinged with the boom, and the upper end of the boom is hinged with the telescopic end of the oil cylinder. The utility model adopts a material handling device for underground roadway with the above structure, which can adjust the height of the telescopic boom through the cooperation of the boom, connecting rod and oil cylinder to clean and excavate the water sump below the ground.

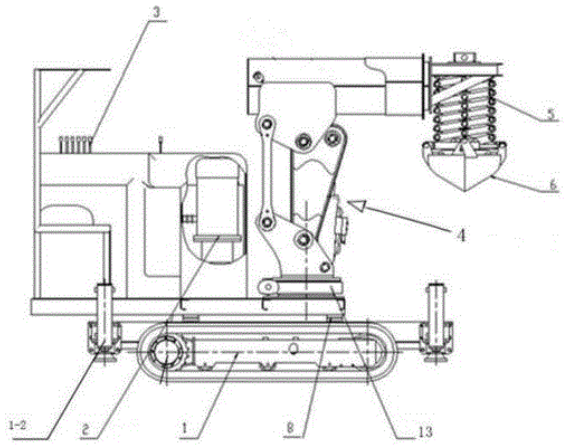

21: 2023/02327. 22: 2023/02/23. 43: 2023/05/18
51: A01C
71: Gansu Desert Control Research Institute
72: WAN, Xiang, LIU, Haizhou, HU, Xiaoke, YANG, Yang, LI, Ya, WANG, Yuanyan, WEI, Linyuan
54: METHOD FOR LAYING FILTER PAPER ON CULTURE DISH
00: -
Disclosed is a method for laying filter paper on a culture dish. The method includes: (1) disinfecting two culture dishes having different sizes, tweezers and filter paper at 105 degrees Celsius for 30 min, and then taking out and cooling same to a room

temperature; (2) taking 4 ml of distilled water and pouring same into the large culture dish; (3) taking out three layers of filter paper by using the tweezers, and immersing the filter paper into the large culture dish with distilled water; and (4) carefully lifting the treated filter paper with the tweezers, moving the filter paper into the other small culture dish, and pressing an edge of the filter paper to a bottom of the small culture dish with the tweezers. The method is convenient to operate, ensures uniform water absorption of sown seeds, and reduces seed mildewing and cross infection.

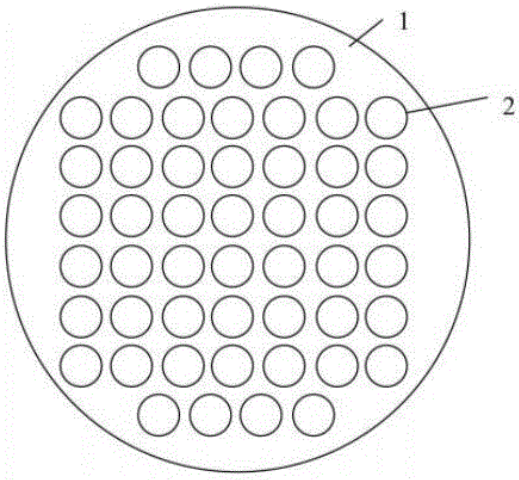

21: 2023/02332. 22: 2023/02/23. 43: 2023/05/19
51: B07C
71: Zhengzhou University of Aeronautics
72: Bi Liping, Liu Lili, Zhao Ruihan, Li Bingqi, Wang Yinghui

54: AN AUTOMATIC RETURN AND SORTING DEVICE FOR SMART LIBRARY

00: -

The invention discloses an automatic book return and sorting device of a smart library, which includes a frame, on which a first conveyor belt is placed on the left and right, and a second conveyor belt is placed on the left and right in front of the first conveyor belt. The vertical sections of the first conveyor belt and the second conveyor belt are staggered in V shape, and the books automatically slide down and contact with the second conveyor belt after falling on the first conveyor belt; The left side of the second conveyor belt is equipped with a third conveyor belt in the same direction. There is a gap between the second conveyor belt and the third conveyor belt, and there is a monitoring device in this gap. The left side of the third conveyor belt is equipped with a transport device, and there is a turnover device above the transport device. The monitoring device is connected to the transport device through the control unit; The monitoring device recognizes the positive and negative sides of the book and transmits the signal to the control unit, which outputs the signal to control the forward and reverse transportation of the transport device. The invention solves the problem of abnormal code scanning caused by incorrect book placement and mixed positive and negative sides.

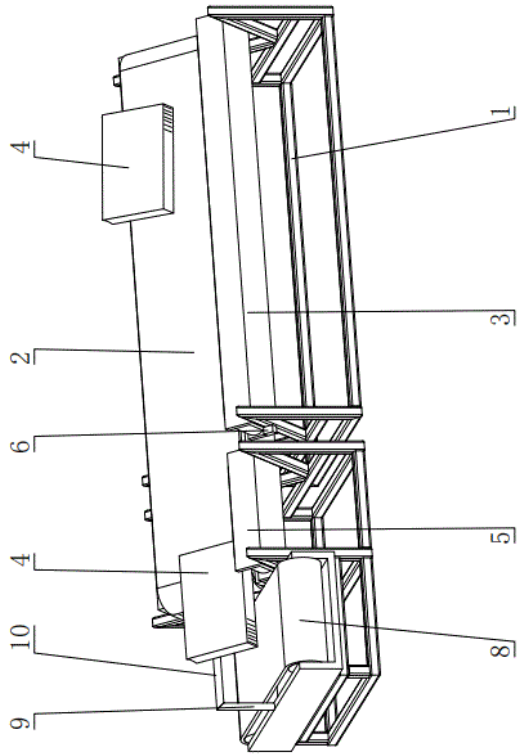

21: 2023/02333. 22: 2023/02/23. 43: 2023/05/19
51: A47B
71: Zhengzhou University of Aeronautics
72: Liu Huancheng, Yang Shujing, Shang Changzhen, Qin Yonghui

54: AN ADJUSTABLE BOOKSHELF IN THE LIBRARY

00: -

The invention discloses a library adjustable bookshelf, which comprises a shelf body, a column, a partition, a hanging plate, and a book stop strip. Multiple partitions divide the shelf body into multiple

layers, multiple columns are arranged between the bottom plate and the top plate, multiple columns divide the shelf body into left and right areas, and the columns are arranged symmetrically before and after the columns, and the areas are divided into adjustable areas and fixed areas. The hanging plate is arranged between the front and rear symmetrical columns, and the hanging plate is arranged on the upper surface of the partition, The book blocking strip is set between the two adjacent hanging boards on the left and right. The book blocking strip is divided into the first book blocking strip and the second book blocking strip. The first book blocking strip is located between the two adjacent hanging boards on the left and right in the adjustable area. The position of the first book blocking strip is adjustable along the length direction of the hanging board. The second book blocking strip is fixed between the two adjacent hanging boards in the fixed area. The invention solves the problem that the ordinary bookcase in the prior art cannot place books with large size in the conventional way.

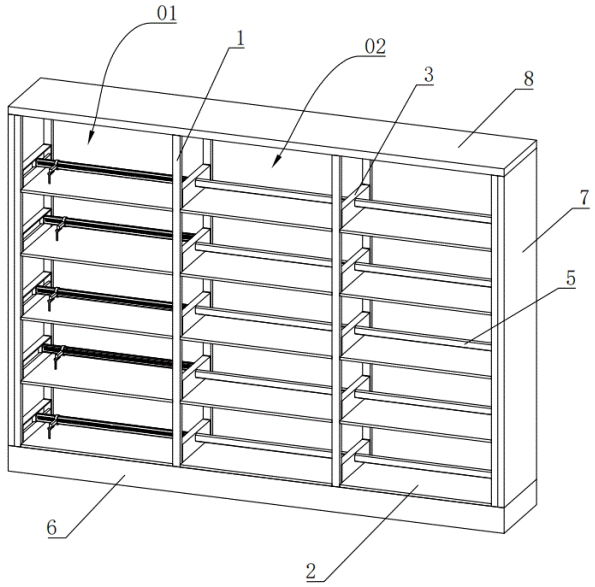

21: 2023/02334. 22: 2023/02/23. 43: 2023/05/19
51: A61H
71: Henan Provincial Hospital of Traditional Chinese Medicine (the Second Affiliated Hospital of Henan University of Traditional Chinese Medicine)
72: Zhu Xiaofang, Zhu Luyuan, Xu Shufang, Pei Chunliu, Yu Dan, Kong Huili, Yao Lijun, Lu Yang, Chu Xiuxia, He Shengnan, Bai Yujing, Wang Jingpei

54: A HOT COMPRESS MASSAGE DEVICE FOR STOMACH
00: -
The invention discloses a stomach hot compress massage device, which comprises a square plate, on which are inserted a plurality of massage blocks that move up and down, on which is fixed a square shell with an opening facing down, on which is inserted a toggle device, and the lower end of the toggle device is placed between the massage blocks; The upper end of the square shell is rotationally connected with a round shell with an opening downward. The round shell is equipped with a driving device, which drives the toggle device to move back and forth or left and right, thus driving the massage block to move up and down for massage. The invention solves the problem of poor effect of stomach massage.

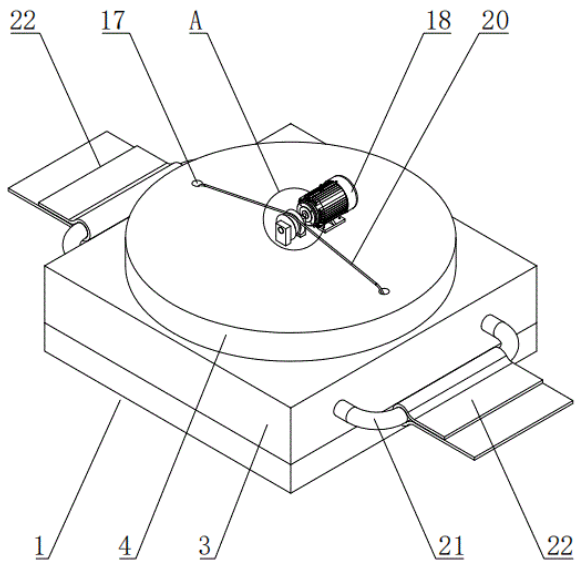

21: 2023/02341. 22: 2023/02/23. 43: 2023/05/18
51: B02B
71: SHANXI AGRICULTURAL UNIVERSITY SHANXI FUNCTIONAL FOOD RESEARCH INSTITUTE
72: GUO, Hong, LI, Yunlong, HU, Junjun, LI, Hongmei, LI, Qi, CHENG, Zhe
54: CIRCULATING HULLING DEVICE FOR PRODUCING BUCKWHEAT TEA
00: -
The present utility model discloses a circulating hulling device for producing buckwheat tea, including a housing, where a cushioning mechanism is fixedly

connected to the bottom of the housing, and rollers are mounted at four corners of the bottom of the cushioning mechanism; a feed inlet is provided at the center of the top of the housing; and a blower is mounted at the lower end of a left side wall of the housing, and an air guide pipe is provided at the right end of the blower. By providing material guiding plates and a sieve plate, the hulled buckwheat tea can be quickly guided onto the sieve plate, thereby improving the hulling efficiency of the device.

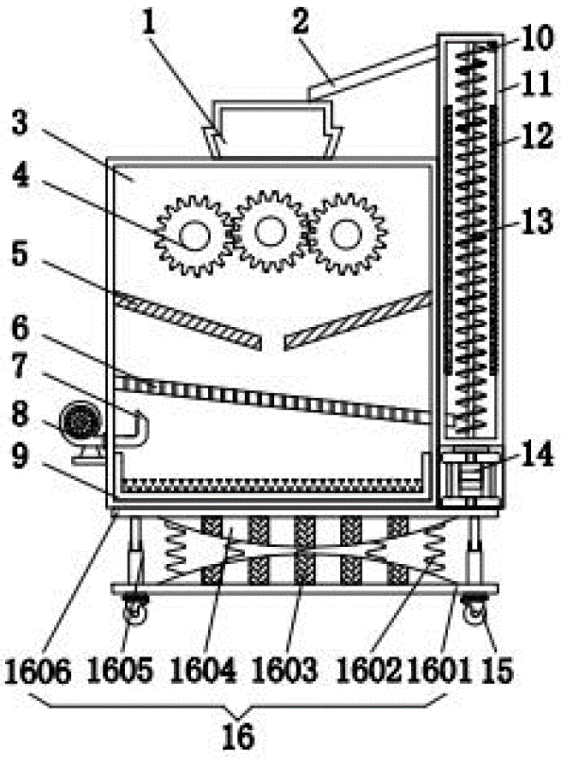

21: 2023/02342. 22: 2023/02/23. 43: 2023/05/18
51: B65G; C12G
71: Hebei Normal University of Science and Technology
72: ZHANG, Jiancai, MENG, Jun, MENG, Lingkui, GU, Ke
54: WINE MECHANICAL PRODUCTION LINE
00: -
Disclosed is a wine mechanical production line, including a picking platform, a hoist, a destemmer, a vibrating screen, a crusher, a fermentation tank, an atmosphere presser and a diatomite filter, wherein the input ends and the output ends of all the devices are connected in turn from left to right, windowing design is adopted at the position of each device making contact with grapes, acrylic materials are embedded to block the windowing positions, part of the fermentation tank is made of acrylic materials for easy observation; and sight glasses are arranged on a wine liquid inlet tube and a wine liquid outlet tube of the diatomite filter. All processing flows are connected, so that the grape pre-processing operation forms a continuous and efficient mechanized production process. The production efficiency is improved, and the enthusiasm of making wine in a wine chateau mode is enhanced.

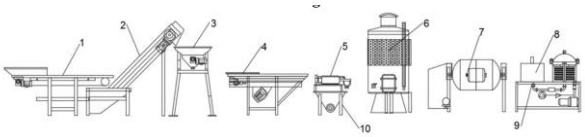

21: 2023/02353. 22: 2023/02/23. 43: 2023/05/18
51: A01G
71: FUDAN UNIVERSITY, Chengdu University of Technology, Fushengyuan Environmental Technology (Jiangsu) Co., Ltd.
72: Zheng Zheng, Li Guo, Luo Xingzhang, Wang Shoubing, Liu Yu, Zhang Weizhen
54: COMPREHENSIVE MANAGEMENT METHOD FOR SPARTINA ALTERNIFLORA
00: -
The invention discloses a comprehensive management method for Spartina alterniflora, which belongs to the technical field of controlling exotic plants. According to the invention, in the vigorous growth period, mow and insolate Spartina alterniflora, then spray chemical agents on the plot and cover it with biological blankets. And the combination of mowing, insolating, chemical spraying and biological blanket provided by the invention can effectively control the expansion of Spartina alterniflora, completely kill Spartina alterniflora, and the weed control effect is as high as 99%~100%, and there is no resurrection phenomenon after weeding for two months. Moreover, the method of the invention greatly reduces the dosage of herbicide, has little harm to the environment, and helps to restore the original ecology of the environment while removing Spartina alterniflora.

21: 2023/02354. 22: 2023/02/23. 43: 2023/05/19
51: G05F

71: Dr. Mohammed Aslam Husain, Dr. Md Tabrez, Akhtar Saleem Ansari, Rani Kiran, Dr. Farhad Ilahi Bakhsh, Dr. Anwar Ulla Khan, Dr. Asif Khan
72: Dr. Mohammed Aslam Husain, Dr. Md Tabrez, Akhtar Saleem Ansari, Rani Kiran, Dr. Farhad Ilahi Bakhsh, Dr. Anwar Ulla Khan, Dr. Asif Khan

54: SPIDER MONKEY OPTIMIZATION-BASED GLOBAL MAXIMUM POWER TRACKING FOR PV SYSTEMS

00: -

The present disclosure relates to Global Maximum Power Point Tracking (GMPPT) method based on Spider monkey optimization for Photovoltaic (PV) systems comprising of initializing population by uniformly distributing population of spider monkeys (SM); modifying current position of the SM at Local leader phase; updating current position of SM using experience of Global leader at Global leader phase; updating local leader by applying greedy selection in Local leader learning phase; redirecting for foraging by local leader decision phase if current position at local leader is not updated; and splitting the population into small groups by global leader decision phase if current position of global group leader is not updated. Results of the simulation showed that the GMPPT method is capable of tracking local power peak and global power peak. The local peaks are tracked and finally the global peak is archived. Results show that the GMPPT method is fast and true GMPPT method. Figure 1 shall be reference figure.

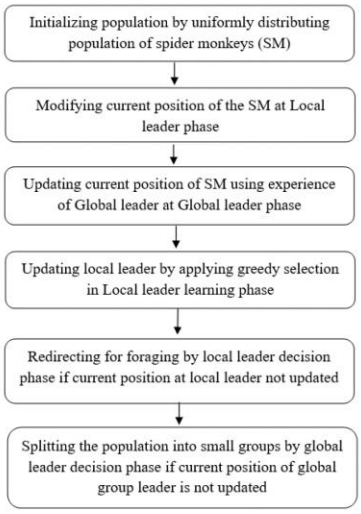

Figure 1: Flowchart of Global Maximum Power Point Tracking (GMPPT) method based on Spider monkey optimization for Photovoltaic (PV) systems

21: 2023/02357. 22: 2023/02/23. 43: 2023/05/19
51: B07C
71: Chuzhou University
72: Sun Xiao, Ben Zongyou, Bai Yu, Dong Yan, Chen Kunjie, Wu Qiang
33: CN 31: 202210362019.5 32: 2022-04-07

54: A DETECTION SYSTEM AND METHOD FOR CHICKEN TENDERS OF FEATHERING CONDITION BASED ON MACHINE VISION TECHNIQUE

00: -

The invention discloses a detection system and method for chicken tenders of feathering condition based on machine vision technique. The system is mainly composed of hardware module, chicken tenders image information extraction module and chicken tenders quality grading module; Firstly, the chicken tenders of the chicken is conveyed to the CCD industrial camera by the conveyor belt in the hardware module, and the original image of the chicken tenders of the chicken is collected; Secondly, the industrial computer controls the end point to preprocess the chicken breast image and get the number of pits; Finally, the concave parameters are transferred to the SVM multi-class classifier model trained by the training set for chicken chicken tenders quality classification. The invention realizes a stable, accurate, low-cost, efficient and objective nondestructive grading test of chicken breast quality grade, which can be implemented in the future in the online

nondestructive testing of chicken breast quality grading in poultry meat processing.

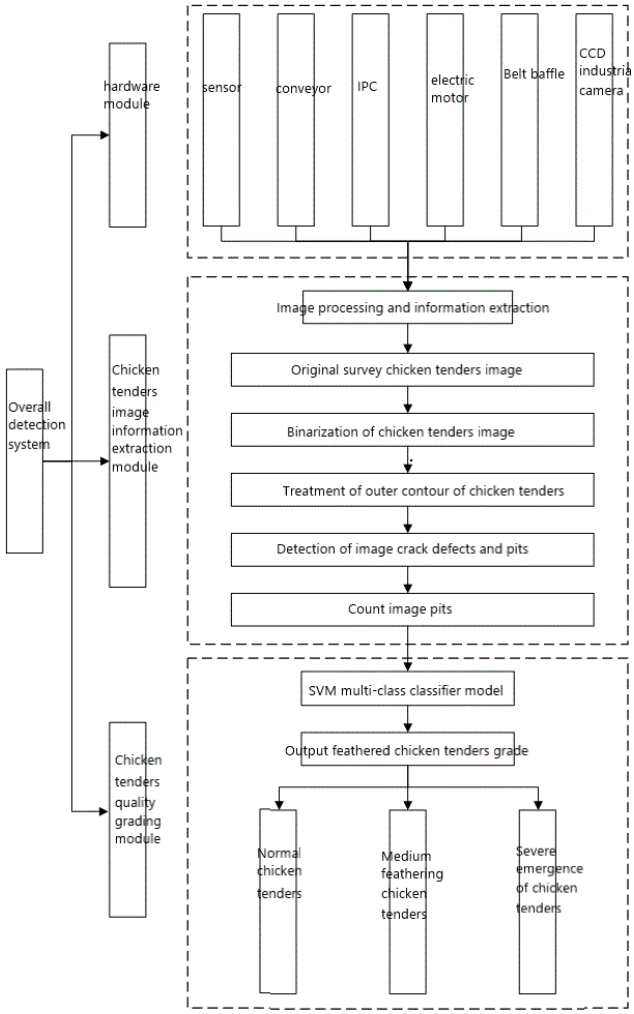

21: 2023/02358. 22: 2023/02/23. 43: 2023/05/18
51: A23N
71: Dr Khan Chand, Asfaq, Gazia Nasir, Dhiraj Kumar Yadav, Dr Amod Sharma, Dr. Rishi Richa
72: Dr Khan Chand, Asfaq, Gazia Nasir, Dhiraj Kumar Yadav, Dr. Rishi Richa, Dr Amod Sharma

54: A PEDAL OPERATED INTEGRATED POTATO PEELING AND SLICING MACHINE

00: -

The invention discloses a pedal operated integrated potato peeling and slicing machine (100). The pedal operated integrated potato peeling and slicing machine (100) comprises of a frame (101) to support components; a peeling unit (102) to peel potatoes; a slicing unit (103) to slice potatoes; a piston unit (104) to move potatoes from the peeling unit (102) to the slicing unit (103); a pedal (105) for operation; and a power transmission unit (106) to power the pedal operated integrated potato peeling and slicing machine (100). The pedal operated integrated peeling and slicing machine (100) is more economical than manual and hand operated peelers/slicers because it has very high capacity. It reduces the manpower in comparison with the manual and hand operated machines. Figure 1 shall be reference figure.

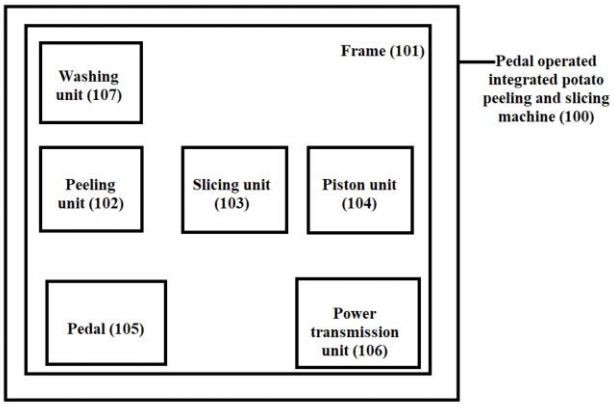

Figure 1: A block diagram of pedal operated integrated potato peeling and slicing machine (100)

21: 2023/02360. 22: 2023/02/23. 43: 2023/05/19
51: G06F
71: Prasanalakshmi Balaji, Thavavel Vaiyapuri, Dr D Nagaraju, Dr.Sravanth Kumar R, Dr Ajith Sundaram, Dr. Chandrashekhar Goswami, Dr. Sudhir Ramadass, Dr.T.Kuntavai, R Chithra Devi, Dr. N. Prakash, Dr.Siva Shankar S
72: Prasanalakshmi Balaji, Thavavel Vaiyapuri, Dr D Nagaraju, Dr.Sravanth Kumar R, Dr Ajith Sundaram, Dr. Chandrashekhar Goswami, Dr. Sudhir Ramadass, Dr.T.Kuntavai, R Chithra Devi, Dr. N. Prakash, Dr.Siva Shankar S

54: SYSTEM FOR REMOTE MONITORING OF HIGH-RISK PATIENTS USING ARTIFICIAL INTELLIGENCE

00: -

The present disclosure relates to a system for remote monitoring of high-risk patients using artificial intelligence. The system comprising of, a remote command center operatively connected to a communication unit, a mobile remote patient detection unit, a mobile remote monitoring unit, an artificial intelligence (AI) system, and a vehicle-mounted medical device. The artificial intelligence (AI) system can be configured to generate a regimen of one or more activity parameters optimized or personalized to a patient, and can be operatively

connected to a vehicle-mounted medical device for diagnosing and treating the patient, wherein, the artificial intelligence (AI) system can operatively be connected to one processing unit comprising one or more processor and a memory, operatively connected to the cloud server to receive, send and store the detection information and simple diagnosis result to the Physician's remote monitoring end and corresponding treatment plan via mobile network to the cloud server. Figure 1 shall be reference figure.

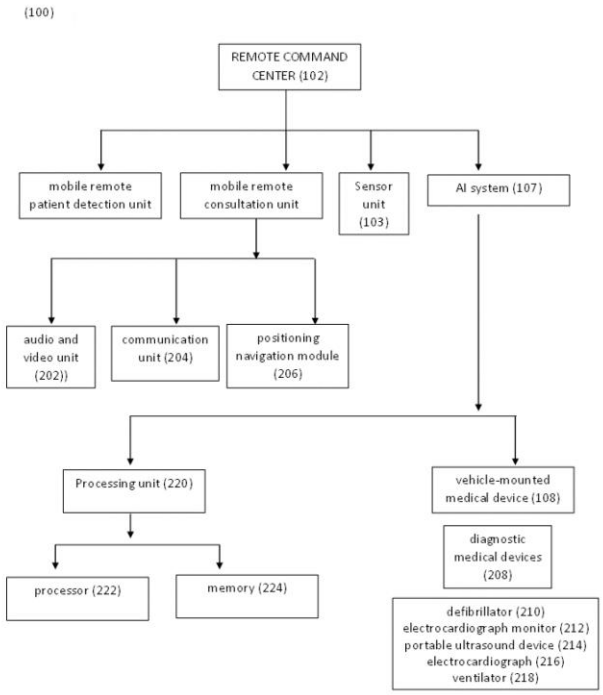

21: 2023/02361. 22: 2023/02/23. 43: 2023/04/20
51: C30B
71: INSTITUTE OF GEOCHEMISTRY CHINESE ACADEMY OF SCIENCES
72: HU, HAIYING, DAI, LIDONG
33: CN 31: 202211604262X 32: 2022-12-13

54: METHOD FOR PREPARING ALUMINUM-DOPED AND HIGH-WATER SINGLE-CRYSTAL CHROMITE UNDER HIGH-TEMPERATURE AND HIGH-PRESSURE CONDITION

00: -

A method for preparing aluminum-doped and high-water single-crystal chromite under a high-temperature and high-pressure condition comprises: preparing a cylindrical chromite sample using solid trigonal ferrous carbonate crystals, solid basic chromium acetate crystalline powder, solid aluminum distearate powder, solid oxalic acid powder, solid a-phase goethite powder, solid aluminum hydroxide powder and liquid dilute nitric acid as starting materials; preparing two water-sourced discs from the a-phase goethite powder and the aluminum hydroxide powder according to a weight ratio of 4:1; and placing the two water-sourced discs at two ends of the cylindrical chromite sample, and then placing the cylindrical chromite sample with the water-sourced discs in a double-layer sample chamber for high-temperature and high-pressure reaction to obtain single-crystal chromite. The present invention solves the problem that there is not technique for preparing large-grained, aluminum-doped and high-water single-crystal chromite under a high-temperature and high-pressure condition, and can obtain large-grained, aluminum-doped and high-water single-crystal chromite experimental samples.

21: 2023/02362. 22: 2023/02/23. 43: 2023/04/20
51: C30B
71: INSTITUTE OF GEOCHEMISTRY CHINESE ACADEMY OF SCIENCES
72: DAI, LIDONG, HU, HAIYING
33: CN 31: 2022116245944 32: 2022-12-16

54: METHOD FOR PREPARING TITANIUM-DOPED AND HIGH-WATER SINGE-CRYSTAL MAGNOCHROMITE UNDER HIGH-TEMPERATURE AND HIGH-PRESSURE CONDITION

00: -

A method for preparing titanium-doped and high-water singe-crystal magnochromite under a high-temperature and high-pressure condition comprises: preparing a cylindrical magnochromite sample using solid basic magnesium carbonate powder, solid basic chromium acetate crystalline powder, liquid titanium(IV) isopropoxide, solid oxalic acid powder, solid brucite powder, solid chromium hydroxide powder and liquid dilute nitric acid as starting materials; preparing water-sourced discs using the brucite powder and the chromium hydroxide powder with a weight ratio of 4:1 as a water source; and placing the two water-sourced discs at two ends of the cylindrical magnochromite sample, and then placing the cylindrical magnochromite sample with the water-sourced discs in a double-layer sample chamber for high-temperature and high-pressure reaction to obtain titanium-doped and high-water singe-crystal magnochromite. The present invention solves the problem that there is no technique for preparing large-grained, titanium-doped and high-

water singe-crystal magnochromite under a high-temperature and high-pressure condition, and can obtain large-grained, titanium-doped and high-water singe-crystal magnochromite experimental samples.

21: 2023/02364. 22: 2023/02/23. 43: 2023/05/19
51: A01K
71: Jiaxing Vocational & Technical College
72: Mingyu Wu, Qiang Li, Yifan Chen, Jianping Lan
54: AN ARTIFICIAL INTELLIGENCE-BASED PET TRAINING ROBOT
00: -
The invention discloses a pet training robot based on artificial intelligence. It includes a robot ontology, wherein a robot subsystem is built-in system. It also includes: artificial intelligence module, the artificial intelligence module is arranged in the robot body, the artificial intelligence module is electrically connected with the robot subsystem, the artificial intelligence module is used to complete the control of the robot subsystem according to the oral instructions of the breeder; The artificial intelligence module includes a voice input module, which is used to input the voice instructions of the breeder; The speech recognition module is used to identify the voice commands of the breeders. If the voice commands are judged to be recorded by the breeders, the robot subsystem can realize the control of food reward issuance by the robot body. The purpose of the invention is to provide a pet training robot based on artificial intelligence, so that the breeders can timely reward pets with food in the process of interacting with pets at ordinary times.

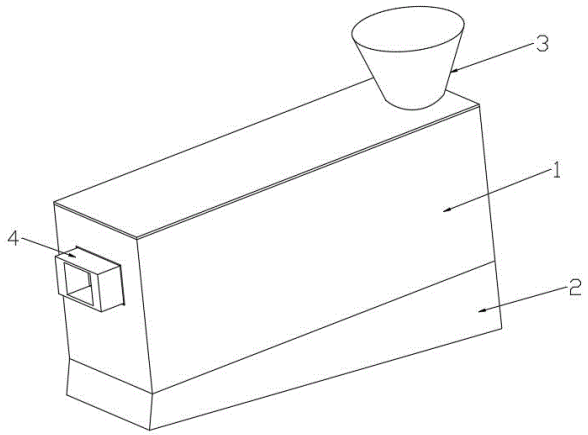

21: 2023/02365. 22: 2023/02/23. 43: 2023/05/18
51: B66B
71: Jiaxing Vocational & Technical College
72: Yifan Chen, Chunfang Gao, Mingyu Wu
54: AN AI-BASED ELEVATOR FACE RECOGNITION DEVICE
00: -
The invention discloses an elevator face recognition device based on AI. It includes an elevator, housing, measuring mechanism, heat dissipation mechanism, angle adjusting mechanism, cleaning mechanism, which is characterized by: the elevator is installed with a supporting rod, the measuring mechanism is arranged on the supporting rod, through the ultrasonic distance sensor to complete the measurement work; The shell is provided with a partition board, the heat dissipation mechanism is arranged on the partition board, through the rotation of the fan blade to complete the heat dissipation work; The housing is provided with a fixing frame, the fixing frame is provided with a crankshaft, U-shaped connecting rod, the angle adjustment mechanism is arranged on the fixing frame, through the crankshaft and U-shaped connecting rod to complete the angle adjustment work; The fixing frame is symmetrically installed with a belt pulley, the pulley is installed with a connecting rod, the cleaning mechanism is arranged on the fixing frame, through the first belt and connecting rod rotation to complete the cleaning work. The invention has the advantages of high safety, no need to lift feet or squat, good heat dissipation performance, and timely dust cleaning.

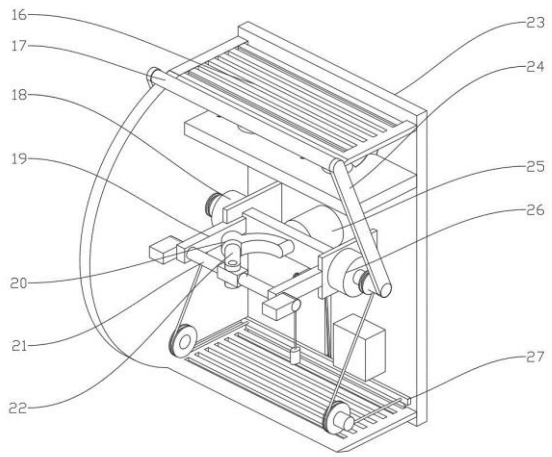

21: 2023/02366. 22: 2023/02/23. 43: 2023/05/18
51: A01C
71: Vegetable Research Institute, Gansu Academy of Agricultural Sciences, Agronomy Research

Institute of Jinchang City, Jinchang Agricultural Products Quality Safety Testing Center (Jinchang Agricultural Products Quality Supervision and Management Station)
72: Yanxia Ma, Chengda Niu, Hua Sun
54: A PIPELINE CONNECTION STRUCTURE AND AN INTEGRATED WATER AND FERTILIZER IRRIGATION UNIT
00: -
The invention relates to the field of agricultural equipment, in particular to a pipe connection structure and an integrated water and fertilizer irrigation unit. The pipe connection structure and water and fertilizer integrated irrigation unit comprises a first pipe, the first pipe is connected to the sleeve, the sleeve pipe clamp second pipe, the sleeve is arranged on the mounting plate, the mounting plate is fixed on the supporting rod, the supporting rod sliding connected pressure plate, pressure plate extrusion in the first pipe step; Its beneficial effects are: Through the sliding connection of the pressure plate, to be the first pipe set in the casing, two groups of pressure plate will be the first pipe squeezed in the casing, and then squeeze the sealing ring between the first pipe and the second pipe, increase the sealing between the first pipe and the second pipe, and the limiting component through the support block, stuck on the outside of the pressure plate, limit the sliding plate at the same time, It prevents the relative rotation between the first pipe and the casing, so as to avoid the rotation between the first pipe and the sleevewhen the sleevedrives the first pipe to rotate, which will affect the sealing performance.

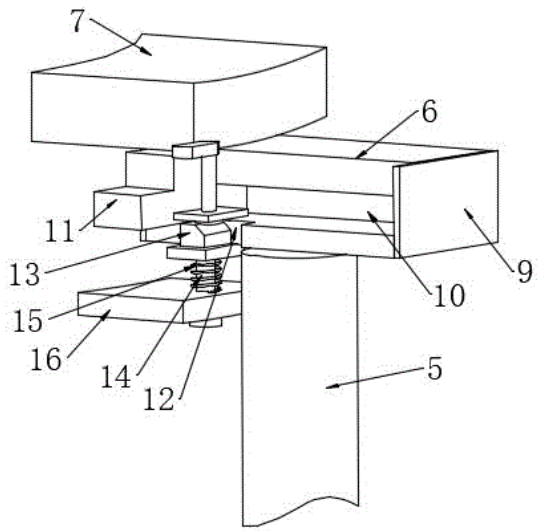

21: 2023/02368. 22: 2023/02/23. 43: 2023/05/16
51: B08B
71: Su zhou university
72: He Kang, Sun Fei, Wu Bo, Li Xiaobiao, Yang Quan, Cai Bin, Zhao Zhuanzhe, Ma Xiaodi, Zhu Guang, Meng Cao
54: AN ON-LINE BEAD CHANGING EQUIPMENT FOR SAND MILL
00: -
The invention relates to the technical field of wet grinding, especially to online bead changing equipment for a sand mill, which comprises a grinding cylinder, wherein a bead adding port and a bead outlet are arranged at the tangent position of the head end and the tail end of the grinding cylinder. When the beads are unloaded, the valve switch of the bead outlet is opened, the beads in the grinding cylinder are pushed by the slurry to enter the bead-liquid separation kettle, the beads are separated from the slurry through the vibrating filter screen, the separated beads enter the cleaning chamber, and are sent to the spiral air dryer through the spiral conveyor at the bottom after being cleaned, and the beads rotate along the inner wall of the spiral air dryer under the action of hot air. And when that bead is added from a bead adding port, the beads enter a grinding cavity along the tangential direction of the edge of the rotating slurry and are uniformly mixed with the slurry to realize bead adding. According to the invention, through the online bead changing device, beads with different particle sizes can be changed on line according to different particle sizes of the required grinding

materials, so that the labor intensity of workers is reduced, the pollution of the working environment is avoided, and the grinding efficiency is improved.

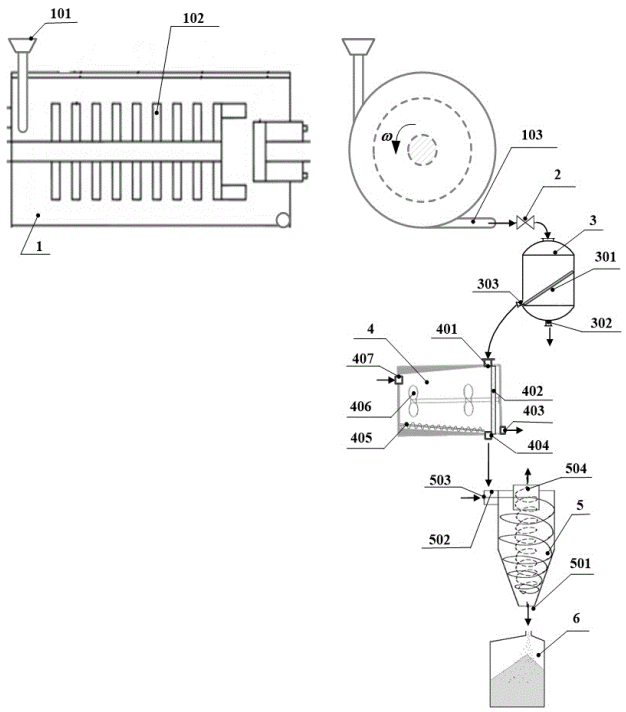

21: 2023/02369. 22: 2023/02/23. 43: 2023/06/03
51: G01R
71: Xinyu university
72: Wang Qing, Fu Siyong

54: A COMMUNICATION TOWER FAULT DETECTION DEVICE

00: -

The present invention patent discloses a communication tower fault detection device, including the first support box, the four corners of the bottom of the first support box are fixed and connected with the first spring, the first support box is threaded through and threaded with evenly distributed screw bolts in the middle of the four periphery, and the first spring is fixed and connected between the top of the second support box. In the patent of the present invention, a certain inclined angle of the main body of the communication tower pressurizes the support sliding plate to drive the support sliding plate to move down, through the support sliding plate down to drive the sliding connection plate to move down, the sliding connection plate moves down will touch the pressure sensor, through the pressure sensor to transmit the signal to the controller, the controller will control the buzzer to work to sound, and then remind the staff at the first time, the staff can repair the communication tower, do not need for staff to repair the communication tower, it can save time, effort and convenient to use.

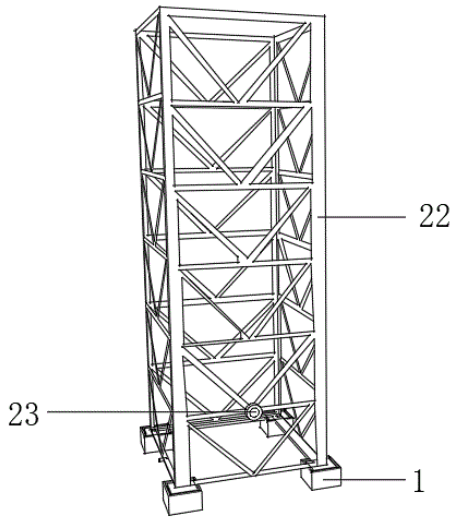

21: 2023/02370. 22: 2023/02/23. 43: 2023/05/16
51: A01N
71: Chuzhou University
72: Wang Yonggui, Zhang Jiangong, Jia Rui, Yan Yuxi, Yu Qiyan

54: A SCAVENGER FOR SHRIMP AND CRAB AQUACULTURE MIXED TRASH FISH AND PREPARATION METHOD

00: -

The present invention discloses a scavenger for shrimp and crab aquaculture mixed trash fish and its preparation method. Belonging to the technical field of shrimp and crab aquaculture. The scavenger for shrimp and crab aquaculture mixed trash fish consists of 30~40 fractions of Derris trifoliata Lour powder, 10~15 fractions of tea saponin, 2~5 fractions of stabilizer, 4~8 fractions of surfactant, 3~5 fractions of pH regulator, 20~30 fractions of cosolvent and 10~30 fractions of water. By mixing and dispersing the first dispersion system formed by surfactant, pH regulator and tea saponin and the second dispersion system formed by Derris trifoliata Lour powder, stabilizer and cosolvent, the scavenger for shrimp and crab aquaculture miscellaneous fish was obtained. The scavenger for shrimp and crab aquaculture miscellaneous fish provided by the

present invention has obvious efficacy and strong pertinence; the preparation method is simple, the raw materials and production costs are reasonable and there is no "three wastes" emissions, which is green environmentally protection, suitable for industrial production.

21: 2023/02371. 22: 2023/02/23. 43: 2023/05/16
51: G06K
71: Xinyu University
72: Fu Siyong, Wang Qing, Zhao Qinghua, Fan Zhen, Xu Ke, Chen Yongkang, LV Junyi
54: A THREE-DIMENSIONAL FACE RECOGNITION DEVICE BASED ON THREE-DIMENSIONAL POINT CLOUD
00: -
The patent of the present invention discloses a three-dimensional face recognition device based on a three-dimensional point cloud, including a support frame, the output end of the first motor is fixed connected with a screw rod, the middle position of the outer diameter of the screw rod through and threaded with a nut pair, the bottom position of the fixed shaft is fixed connected with a fixed frame, the front and rear ends of the fixed frame are connected to the left and right positions are penetrated and provided with a fill light and an electrical connection between the fill light and the light sensor, and the right position of the first rotating shaft is fixed connected with a fixed plate. In the patent of the present invention,through the screw rod rotates by the first motor, the screw rod drives the nut pair to move left and right, the third motor drives the second rotating shaft to drive the first gear, and the first gear drives the second gear and the first rotating shaft to rotate through the engagement tooth connection, which in turn makes the device can track and shoot the human face to ensure the accuracy of camera acquisition,light sensor and fill light, so that when the device is in use, it can fill the light through the fill light according to the ambient light brightness.

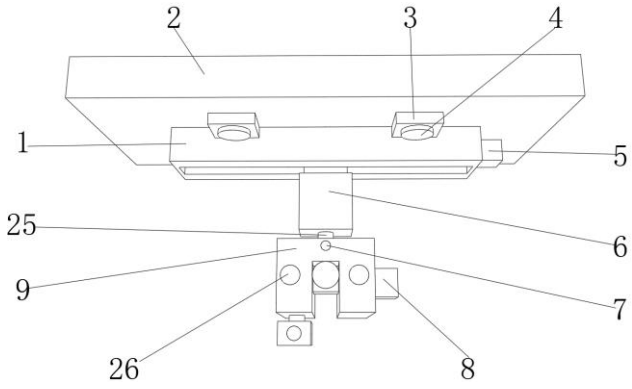

21: 2023/02372. 22: 2023/02/23. 43: 2023/05/16
51: C25D
71: Inner Mongolia Minzu Uuiversity
72: Hai Wenfeng, Chen Yingsong
54: A MONGOLIAN ACUPUNCTURE NEEDLE AND PREPARATION METHOD THEREOF
00: -
The invention belongs to the technical field of acupuncture and provides a Mongolian acupuncture needle and a preparation method thereof, including the following steps: S1. The steel needle is ultrasonic cleaned by acetone acetone, hydrochloric acid solution and sodium hydroxide solution in turn, and then dried for use; S2. The steel needle obtained from S1 is connected to the electrochemical workstation as working electrode, counter electrode and reference electrode. The three-electrode is inserted into the aqueous solution containing silver nitrate, potassium nitrate and polyethylpyrrolidone, and the constant voltage is applied to the working electrode for reaction, so that the silver ions in the solution are reduced and uniformly deposited on the surface of the steel needle. The acupuncture needle modified by silver particles is formed. The acupuncture needle prepared by the invention has bactericidal effect of silver itself. It is biocompatibility and has no alteration for a long time. The heat evenly conduction is prompted in the body for the needle’s surface is prepared to nano-scale surface that area is larger than traditional one.

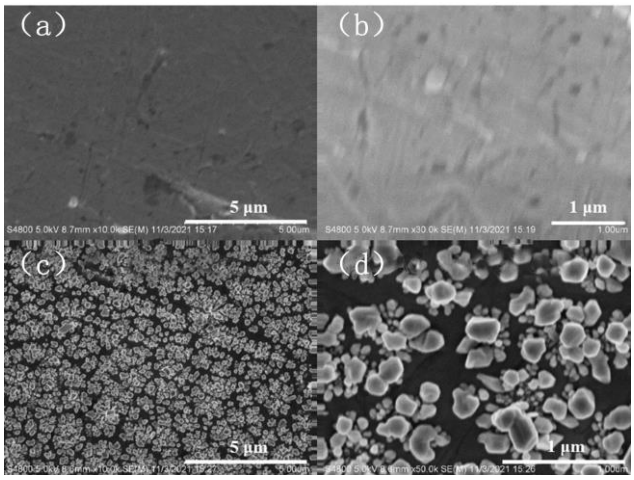

21: 2023/02373. 22: 2023/02/23. 43: 2023/05/16
51: H02H
71: Elcetric Engineering Co.,Ltd of CRSG
72: Xu Jinsong, Zhang Kai, Liu Xunguang, Lu Hui, Zhao Peiyun, Wang Dengke, Liang Guoling, Song Junjie, Zhang Guoling

54: SUBSTATION POWER SUPPLY REMOTE FUNCTION INSPECTION AND TESTING SYSTEM

00: -

The present invention relates to the technical field of power supply, and discloses a substation power supply remote function inspection and testing system, including a testing platform unit, an electric signal at the output end of the testing platform unit is connected to a centralized dispatching module, an electric signal at the output end of the centralized dispatching module is connected to a power testing unit, an electric signal at the output end of the power testing unit is connected to a test monitoring station, the input and output ends of the test monitoring station are connected to the electric signal at the output end of the power testing unit, and the electric signal at the output end of the test monitoring station is connected to the electric signal at the output end of the power testing unit. By setting up the power test unit and setting up the power standard reference module in the power test unit, and testing the power data of each station through the power standard reference module, the power data of different stations are taken and combined into the power standard reference module, and the abnormal data are quickly tested and judged through the power standard reference module, so as to accurately judge whether the equipment The result is an accurate judgement of whether the equipment is qualified or not.

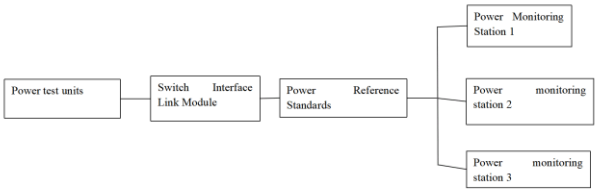

21: 2023/02374. 22: 2023/02/23. 43: 2023/05/09
51: G06Q
71: COSCO SHIPPING TECHNOLOGY (BEIJING) CO., LTD.
72: FENG, Xuehai, WEI, Mingming, YIN, Donghai, WANG, Li, MEI, Fenghai, LIANG, Jun
33: CN 31: 202211102512.X 32: 2022-09-09

54: CALCULATION AND ANALYSIS METHOD OF SHIP OPERATION BENEFIT

00: -

The embodiment of the present invention discloses calculating and analyzing method for ship operation benefit, including steps: S1, Establishing a connection of ship operation data between the data warehouse system and the business system; S2, Loading the ship operation data from the business system to the data warehouse system automatically; S3, Processing the ship operation data loaded into the data warehouse system; S4, Transferring the ship operation data, flowing and activating the processed ship operation data in the data warehouse system between different data storage models for subsequent data integration; S5, Integrating different data storage models into multiple information providers for unified data query; S6, Creating data query based on the multiple information providers; S7, Creating ship operation benefit analysis reports based on the created data queries.

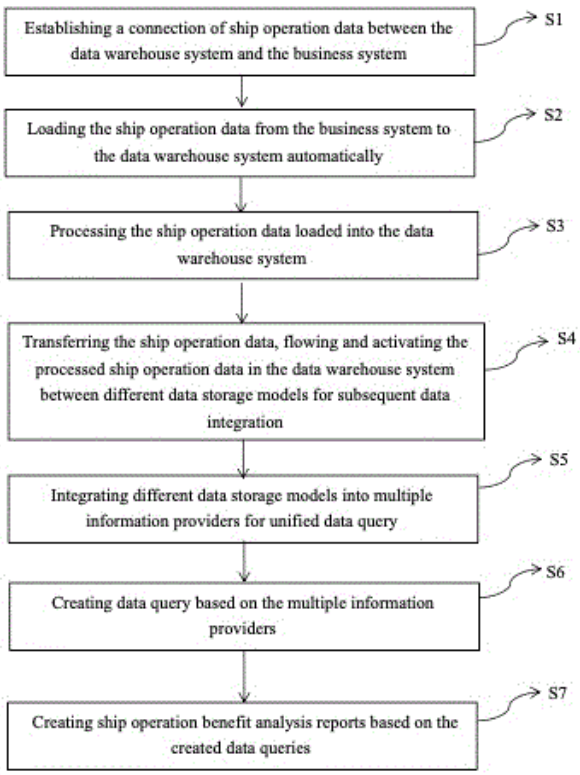

21: 2023/02375. 22: 2023/02/23. 43: 2023/05/16
51: A61K
71: Dr. Utpal Jana, Dr. Arya Lakshmi Marisetti, Dr. DSNBK Prasanth, Mr. Darla Raju, Dr. Harshal Ashok Pawar, Dr Bhaskara Raju Vatchavai, Dr Kamala Lumari P V, Dr Mohan Gandhi Bonthu, Dr. Praveena Maddi, Pavan Kumar Krosuri
72: Dr. Utpal Jana, Dr. Arya Lakshmi Marisetti, Dr. DSNBK Prasanth, Mr. Darla Raju, Dr. Harshal Ashok Pawar, Dr Bhaskara Raju Vatchavai, Dr Kamala Lumari P V, Dr Mohan Gandhi Bonthu, Dr. Praveena Maddi, Pavan Kumar Krosuri

54: A PROCESS FOR FORMULATING FAST DISSOLVING TABLETS OF ETODOLAC AND ITS COMPOSITION THEREOF

00: -

The present invention generally relates to a process for formulating fast dissolving tablets of Etodolac comprises mixing 0-5 wt% of Crospovidone, 0-5 wt% of Croscarmellose sodium, 0-5 wt% of Sodium starch glycolate, 45-55 wt% of Etodolac, 20-30 wt% of Microcrystalline cellulose, 15-20 wt% of Mannitol, 3-4 wt% of Aspartame, 1-3 wt% of Talc, and 0-2 wt% of Mg. Stearate; sieving the mixture upon passing mixture through sieve no. 60; co-grounding in a glass pestle mortar; evaluating blends for mass-volume relationship selected from Bulk Density, Tapped Density, Hausners Ratio, Compressibility Index and flow properties including angle of repose; and compressing mixed blend of excipients using a single punch tablet machine to produce fast dissolving tablets.

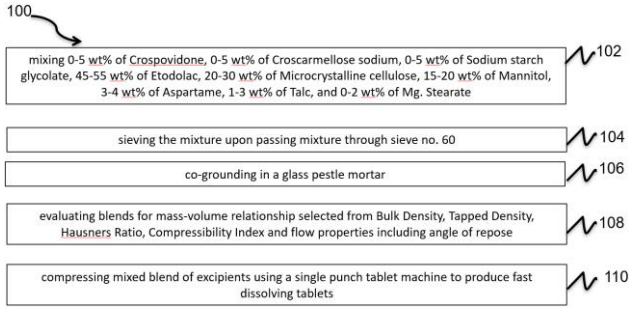

21: 2023/02376. 22: 2023/02/23. 43: 2023/05/16
51: F25B
71: Dr. Manoj Kumar Ghosal, Smruti Rekha Sahoo, Sourav Ghosal, Srabani Ghosal
72: Dr. Manoj Kumar Ghosal

54: A SYSTEM ON RENEWABLE ENERGY BASED COOL CHAMBER FOR COLD STORAGE

00: -

A system (100) on renewable energy based cool chamber for cold storage, comprises of: an insulated PUF panel (102) of a desired thickness to maintain minimum lighting condition inside the storage device; a refrigeration module (104) powered by a solar power module (106) for maintaining a low temperature to store fruits and vegetable, wherein the solar power module (106) comprises of: a solar panel (106a) for receiving solar rays on surface of the panel and converting into electrical energy; a charge controller (106c) for protecting the battery against over-charging and discharging and changing the generated current and voltage according to the load requirement; and a battery (106d) for storing the electrical energy to supply power for refrigeration; an evaporative cooling pad (108) for providing additional cooling inside the cold storage; and a fan (110) for circulating air throughout the cold storage and removing the heat generated inside the cold storage.

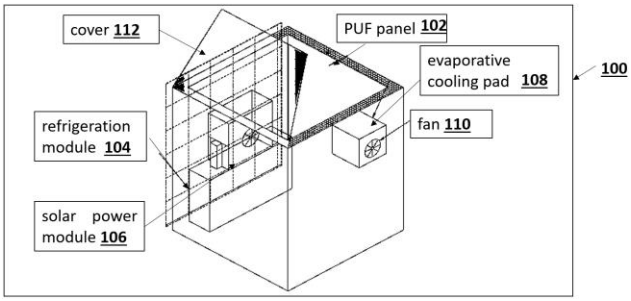

21: 2023/02377. 22: 2023/02/23. 43: 2023/05/09
51: H04L
71: COSCO SHIPPING TECHNOLOGY (BEIJING) CO., LTD.
72: LI, Hongxi
33: CN 31: 202211538516.2 32: 2022-12-02
54: METHOD FOR MULTI-TECHNOLOGY PLATFORM INFORMATION MANAGEMENT
00: -
This invention discloses a multi-technology platform information management, including: configuring unified authorization information for multiple technology platforms, including creating tenants, users, roles, and assigning permissions; setting unified permissions for tenants of multiple technology platforms, establishing unified permission management, and forming unified permission encryption information; establishing a unified information format, retrieving the information that needs to be managed from multiple technology platforms, and integrating the information; storing the integrated information in a unified database; tenants accessing the integrated information in the database from the technology platform. The method for multi-technology platform information management utilizes token technology and API interface technology to implement permission authentication and information access for information fusion, and the data obtained through the interface is integrated using a unified data model and stored in a database. After the integration, the information can be accessed based on functional requirements, which solves the problem of scattered information management and improves the efficiency of managing information on technology platforms, allowing for quick retrieval of information data from various technology platforms.

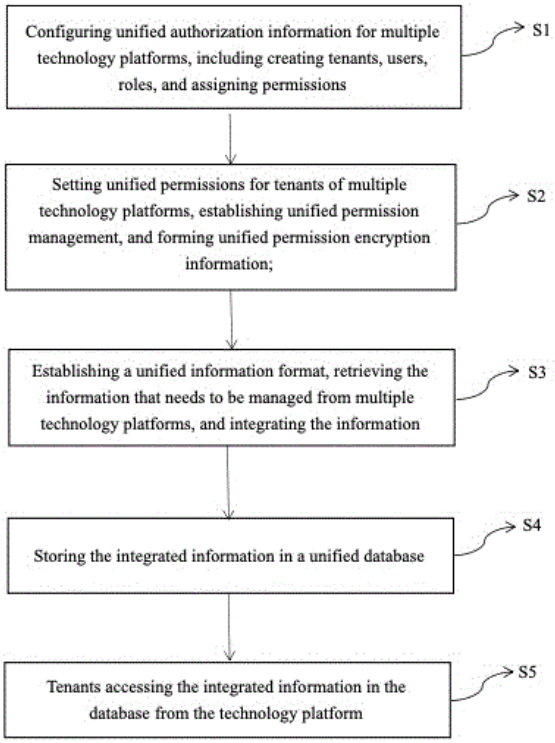

21: 2023/02378. 22: 2023/02/23. 43: 2023/05/16
51: G01R
71: Xuzhou College of Industrial Technology
72: Lin Mengdan, Zhao Xuelin
33: CN 31: 202210256970.2 32: 2022-03-16
54: A SPECIAL POWER SUPPLY DEVICE FOR POWER DISTRIBUTION AUTOMATION TERMINAL DEBUGGING
00: -
The present invention discloses a special power supply device for power distribution automation terminal debugging, including a base, the upper end face of the base is fixedly connected with a plurality of support blocks which are symmetrically with each other, a plurality of the support blocks set away from each other, one end of the plurality of the support blocks away from the base jointly fixedly connected with a work box, the two opposite inner walls of the work box are fixedly connected with battery equipment, and the two inner walls of the work box away from the battery equipment are provided with energized devices, the energized device includes a rotating hole of the disposed on the inner wall of the work box , the rotating hole is rotary connected with a rotating block, the rotating block is fixedly connected with a work pulley, the rotating block is provided with an energized slot on one side wall

near a battery device. The present invention can be convenient to receive and discharge energized lines, with plugs and sockets to better complete the power distribution work, to satisfy the various needs of users, at the same time the convenient movement, it further facilitates to users for debugging work.

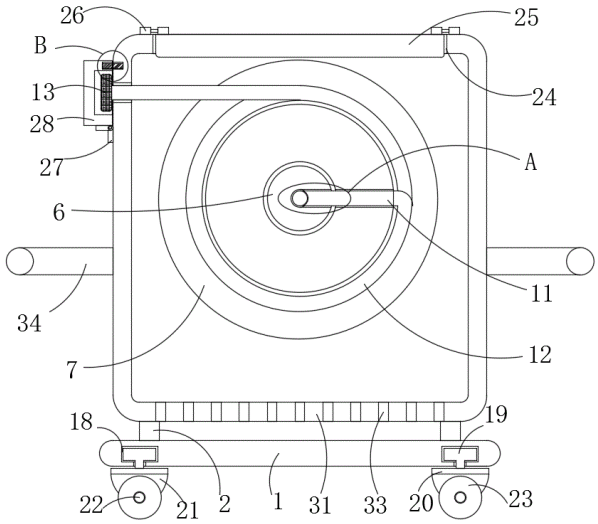

21: 2023/02379. 22: 2023/02/23. 43: 2023/05/16
51: B60S
71: JIANGSU COLLEGE OF SAFETY TECHNOLOGY
72: Duan Kun, Zhu Shuaishuai
54: AN ELECTRICAL AUTOMATIC SPRINKLER DEVICE
00: -
The present invention provides an electrical automatic sprinkler device, including a return water tank and a plurality of spray structures arranged side by side on top of the return water tank; Each spray structure includes an n-type tube and a plurality of water spray devices uniformly arranged along the n-type tube; The two ends of the rotating tube are matched with the n-type tube thread, and the inside is connected with the n-type tube; The top frame of the shelf plate is equipped with a first rotating device, and the first rotating device drives the rotating tube to rotate; The two ends of the moving plate are driven by the mobile device to move in the square slot of the two shelf plates; The side of the rotating tube is connected with the docking tube, and the moving plate passes through and is fixed with a docking sleeve that mates with the docking tube; The outer frame of the mobile plate is equipped with a second rotating device, and the upper frame of the second rotating device is equipped with a nozzle, and the nozzle is connected to the sleeve through a hose. The device can open and close the sprinklers more flexibly, it can save water resources, and can spray at multiple angles to facilitate targeted cleaning.

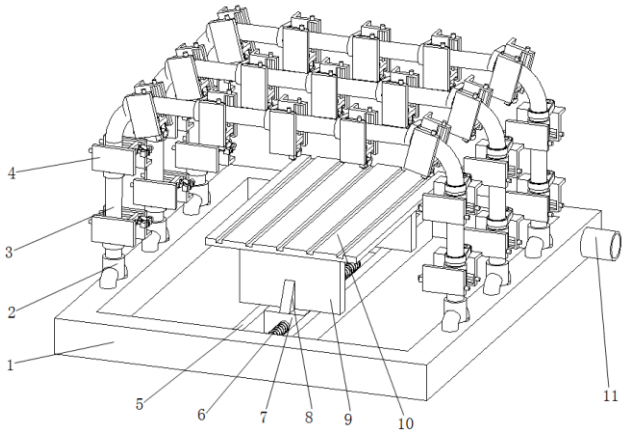

21: 2023/02380. 22: 2023/02/23. 43: 2023/05/09
51: B28C
71: SHANDONG ACADEMY OF AGRICULTURAL MACHINERY SCIENCES
72: ZHONG, Bo, LUO, Shuai, SUN, Zhimin, LI, Qingjiang, MIN, Lingqiang, SUN, Shenggang, CHEN, Zhaohui, SUN, Fang, ZHANG, Cuiying
54: FULL-ELECTRIC SELF-PROPELLED TOTAL MIXED RATION STIRRER
00: -
The present invention belongs to an animal husbandry and breeding device, and particularly to a full-electric self-propelled total mixed ration stirrer, comprising a chassis mechanism, a hopper mechanism, a feeding mechanismand a power supply mounted on the chassis mechanism; wherein a driving seat is provided at the front of the chassis mechanism, the hopper mechanism is provided at the rear of the chassis mechanism, an auger mechanism is provided in the hopper mechanism, a discharge port is provided at a lower end of a side edge of the hopper mechanism, a foldable feeding mechanism is mounted at the discharge port and the power sourceis used for providing the power of the whole machine.

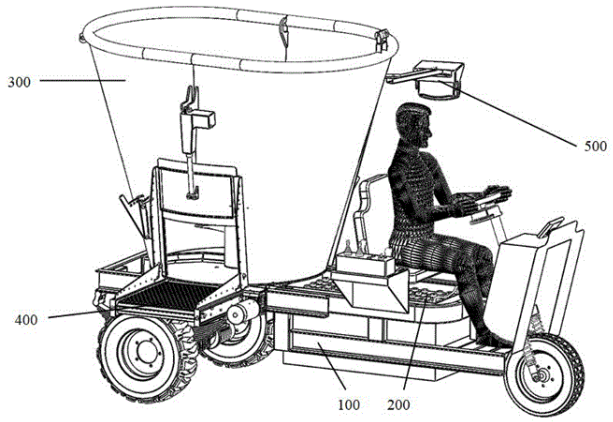

21: 2023/02381. 22: 2023/02/23. 43: 2023/05/16
51: A61K
71: Shenzhen HBW Gene Technology Co., Ltd
72: Wei Ying, Yan Xiaoxia, Wei Xijia, Zhang Meiyu, Liu Shan, Li Lei, Zhou Huijun, Huang Xinlin, Xie Tieqiang, Qu Hui, Shen Hui, Xia Duojiang
54: A NATURAL EDIBLE COMPOSITION WITH HEALTH FUNCTION AND ITS APPLICATION ,COSMETICS AND ITS PREPARATION MOTHOD
00: -
The invention is applicable to the field of pharmaceutical and chemical industry, and provides a natural edible composition with health function and its application, makeup cosmetics and its preparation method, the composition comprises natural multi-active molecule dansin ketone IIA,ginseng extract and soybean lecithin, each component has the effect of synergy superposition, the effect is significant, natural edible, safe without side effects, can be used to prepare multi-molecule, multi-target, multi-level, multi-link, multi-channel makeup cosmetics, Including but not limited to lipstick, lip gloss, color lipstick, color lip balm, lip balm, lip glaze, lip gel, lip dye, lipliner, sebum, eye shadow, blush, powder cake, foundation solution,BB cream, hover cream, foundation liquid, eyeliner, eye shadow cream, eyebrow pencil, makeup powder and other cosmetics, can give cosmetics multiple skin care effects, thus enriching the function of cosmetics.

21: 2023/02382. 22: 2023/02/23. 43: 2023/05/16
51: A61K
71: Jiangsu College of Safety Technology
72: Zhang li, Li chunhui
54: AN OLD-AGE ASSISTED WHEELCHAIR WITH A CONTINUOUS MECHANICAL ARM
00: -
An old-age assisted wheelchair with a continuous mechanical arm is disclosed in the invention, comprising a mounting plate with mounting main frames fixedly connected on both front and rear sides thereof; The right parts of the mounting main frames are arranged with assisted standing mechanical arm modules, which comprise two mounting sleeves that fixedly connected with two mounting main frames respectively; First supporting rods run through and are sliding connected to the upper openings of the mounting sleeves. In the invention, first of all, the micro motors are made to work by operating the lifting switch, and then the micro motors drive the first movable connectors to rotate so that the second supporting rods move downwards and stop when the supporting feet are supported to the ground. Then the first movable connectors will move upward and push the assisted standing handrails move upward through the first supporting rods, allowing the elders to stand up slowly assisted by the assisted standing handrails.

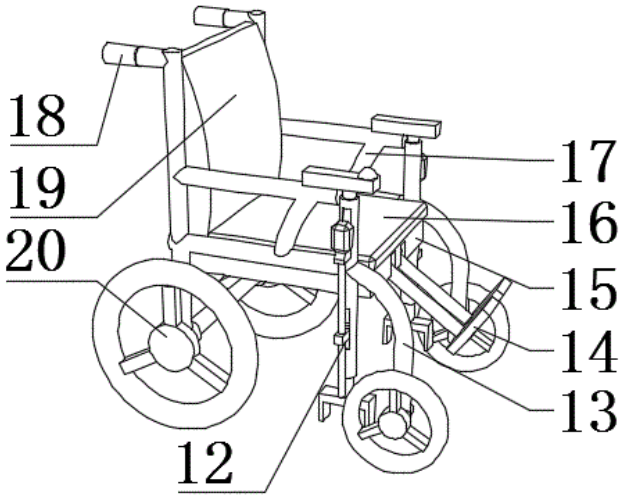

21: 2023/02383. 22: 2023/02/23. 43: 2023/05/16
51: G01N
71: Chongqing Aerospace Polytechnic
72: Peng Haiyan
54: A WATER SEEPAGE TESTING DEVICE FOR BUILDING EXTERIOR WALL
00: -
A water seepage testing device for building exterior wall is disclosed in the invention, comprising a base, and a water tank is fixedly connected to the middle of the top of the base; Rotating components are fixedly connected to the left and right sides of the

rear end of the base; Supporting rods run through and are connected in rotation to the middle of the rotating component; Rotating racks are connected in rotation to the front of the left and right sides of the water tank; A sliding barrel runs through and is sliding connected to the middle of the rear end of the rotating rack, and the sliding barrel is connected in rotation with the supporting rod. In the invention, observing the height of the wall firstly, when which is too high, the sliding plate is pulled out from the rotating rack to a certain position, and the second latch is inserted to the spacing hole in the sliding plate to prevent the sliding plate from falling; When the sliding block slides to a needed position through the sliding slot in the sliding plate, the second latch is inserted to fix the sliding block; Then the water pipe is installed on the sliding block and is connected with a water separator, so as to carry out the water seepage testing on the wall with large area.

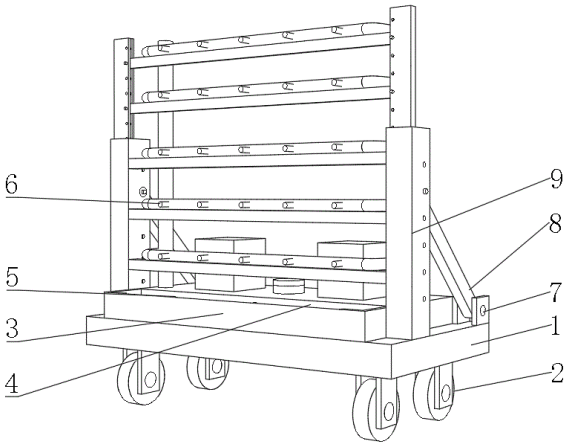

21: 2023/02384. 22: 2023/02/23. 43: 2023/05/16
51: C10N
71: Suzhou University
72: Wang Cong, Guo Zhihua, Zhang Dejin, Du Jun, Zuo Youpeng, Zhuo Xin, Shi Hongwei, Zhang Mengjie
33: CN 31: 202310091747.1 32: 2023-01-17
54: LIQUID SAMPLING DEVICE FOR CHEMICAL ANALYSIS
00: -
The invention discloses a liquid sampling device for chemical analysis, and belongs to the technical field of chemical analysis and detection equipment. The liquid sampling device for the analytical chemistry comprises a sampling cylinder and a sampling head, and further comprises a partition plate which divides an inner cavity of the sampling cylinder into an upper cavity and a movable cavity, wherein the upper cavity is communicated with a valve body, and the partition plate is provided with a first through hole and a sliding hole; The linkage piston comprises a first piston head, a piston rod and a second piston head, wherein the second piston head is in sealed sliding connection with the inner wall of the movable cavity, the top end of the piston rod is connected with the first piston head, the bottom end of the piston rod is connected with the second piston head which is provided with an on-off mechanism; and the liquid inlet of the stop valve is communicated with the upper cavity, and the liquid outlet of the stop valve is communicated with the middle cavity. According to the liquid sampling device for chemical analysis, the sampling cylinder can be flushed in time after the sampling of one solution is finished, so that the pollution of the next solution caused by the residue of the previous solution in the sampling cylinder can be prevented during continuous sampling.

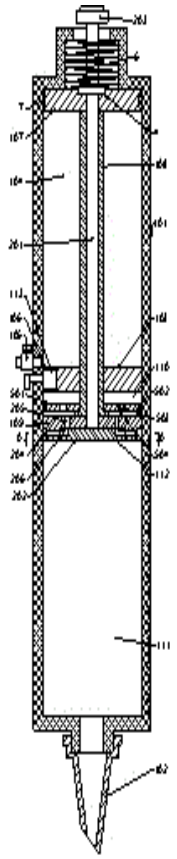

21: 2023/02385. 22: 2023/02/23. 43: 2023/05/16
51: B65G
71: Shandong Center for Quality Control of Feed and Veterinary Drugs, Shandong Mingwei Environmental Protection Technology Co., Ltd
72: Li Youzhi, Zhou Jigang, Tang Wenli, Yin Lingling, Zhang Anyuan, Liu Yalin
54: A COLLAPSIBLE CONVEYOR
00: -
The invention discloses a retractable conveyor, which comprises a conveyor belt retractable device, a barrier retractable device and two foldable barrier devices, wherein the conveyor belt retractable device and the barrier retractable devices are connected through a conveyor belt to form a conveying channel; And the two foldable barrier devices are symmetrically arranged on two sides of the conveying channel as well as between the conveyor belt retractive device and the barrier retractive device. The folding and releasing of the conveyer belt is realized under the action of the conveyer belt folding and releasing device, the conveyer belt is suitable for transportation in different transmission distances, the application range is expanded, the folding and retracting of the foldable barrier device can be realized under the action of the barrier folding and releasing device, the occupied space is reduced, which facilitates the transportation.

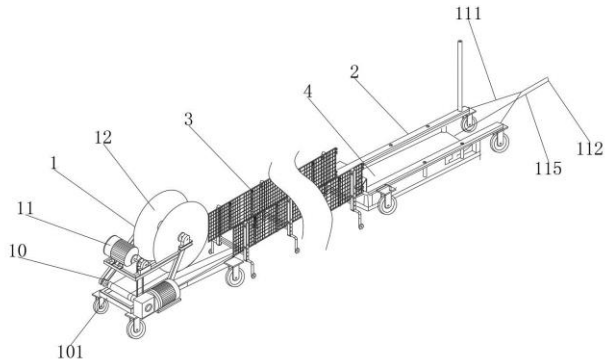

21: 2023/02387. 22: 2023/02/23. 43: 2023/05/16
51: B65G
71: Shandong Center for Quality Control of Feed and Veterinary Drugs, Shandong Mingwei Environmental Protection Technology Co., Ltd
72: Li Youzhi, Zhou Jigang, Yang Zhikun, Zhan Yuming, Wei Maolian, Yin Lingling
54: A LOADING SERVICE VEHICLE FOR POULTRY TRANSPORTATION SYSTEM
00: -
The invention discloses a loading service vehicle of a poultry transport system. A telescopic loading and unloading conveying mechanism, a lifting conveying mechanism, a loading and conveying mechanism, the carrying vehicle body on one side of the lifting and conveying mechanism are also provided with a foldable transport vehicle for carrying the poultry loading and unloading mechanism and a bracket trolley for carrying the lifting and conveying mechanism; In the invention, the system is conveniently carried and moved by the carry vehicle, the poultry loading and unloading mechanism is transferred by the foldable transport trolley, the lifting conveying mechanism is moved by the bracket trolley, only the lighter parts of the poultry transportation system needs moving from the carrier body to the ground in turn which reduces the labor intensity.

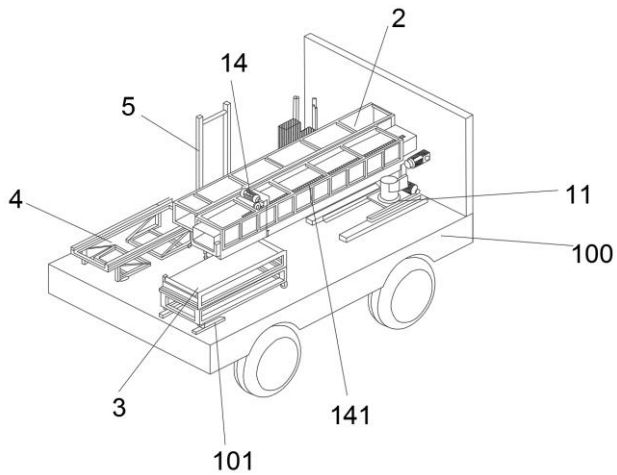

21: 2023/02389. 22: 2023/02/23. 43: 2023/05/16
51: B66B
71: Jiangsu College Of Safety Technology
72: Xin Jingke, Zhang Jian
54: AN ELEVATOR DOOR FOR LIMIT DEVICE FOR ELEVATOR MAINTENANCE
00: -
The invention discloses an elevator door limit device for elevator maintenance, including a body, the body is provided with a main cavity, the main cavity is installed with symmetrical rotation of two main spindles between the upper and lower walls,each of the main spindle is installed with a winding wheel and a worm gear from top to bottom in turn, each of the winding wheel is coiled with a limit cable, the side wall of the main cavity is centrally rotated and

installed with a worm gear, the two worm gears are symmetrically matched on both sides of the worm rods, the body is located in the main cavity on both sides of the two guide cavities, each guide cavity is rotated and installed with two guide wheels, and two limit chutes are symmetrically opened on the outer side wall of the body. The invention realizes limit anti-reverse protection through the drive mode of worm gear and worm rod, and realizes the dual mode adjustments of limit distance through manual and electric control, the segmented design of the spindle realizes the function of limit adjustment and quickly unlock and return, which is simple structure, convenient operation, higher safety and reliability.

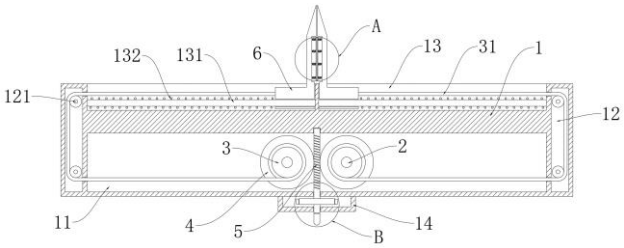

21: 2023/02409. 22: 2023/02/23. 43: 2023/05/09
51: A01H; C12N
71: INSTITUTE OF TROPICAL BIOSCIENCE AND BIOTECHNOLOGY OF CHINESE ACADEMY OF TROPICAL AGRICULTURAL SCIENCES
72: WU, Yuanli, YANG, Benpeng, ZAN, Limei, ZHANG, Shuzhen, CAO, Zhengying
33: CN 31: 202010807635.8 32: 2020-08-12
54: PLANT TISSUE CULTURE MEDIUM AND PREPARATION METHOD
00: -
A plant tissue culture medium and preparation method thereof, a nitrogen source in calcium ammonium nitrate (5Ca(NO3)2.NH4NO3.10H2O) replace nitrogen sources provided by ammonium nitrate (NH4.NO3) and potassium nitrate (NH4.NO3) in a traditional MS culture medium, and moreover, due to the introduction of calcium ammonium nitrate, the original concentrations of trace elements and calcium ions are changed, so that proper ammonium sulfate, potassium chloride and potassium sulfate are introduced during preparation; the ratio of the trace elements to calcium elements is consistent.

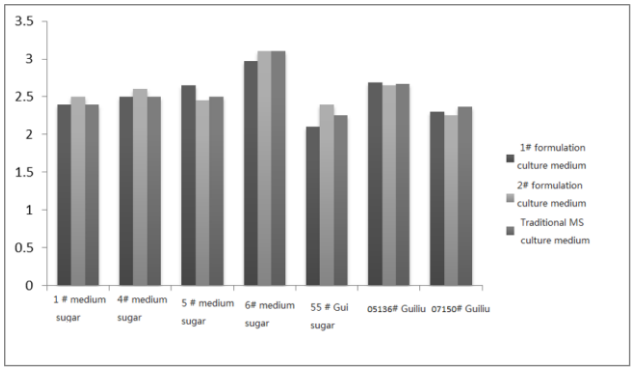

21: 2023/02410. 22: 2023/02/23. 43: 2023/05/09
51: E21B
71: SINOSTEEL MAANSHAN GENERAL INSTITUTE OF MINING RESEARCH CO., LTD., MAANSHAN MINING INSTITUTE OF BLASTING ENGINEERING CO., LTD., HUAWEI NATIONAL ENGINEERING RESEARCH CENTER OF HIGH EFFICIENT RECYCLE AND UTILIZATION FOR METALLIC MINERAL RESOURCES
72: LI, Longfu, HUANG, Qiuju, JIANG, Dongping, FANG, Jianguo, ZHANG, Jiechuan, ZHAN, Sibo
33: CN 31: 2022104139677 32: 2022-04-14
54: CHARGING METHOD FOR HORIZONTAL HOLES IN UNDERGROUND MINE FRACTURED ROCK MASSES
00: -
The present invention discloses a charging method for horizontal holes in underground mine fractured rock masses. A front end of the hole protection casing (3) is sleeved with a casing cap (4), the hole protection casing (3) is inserted into a blast hole (2) with an opening downward; a nonel detonator (6) is inserted into a cartridge (5); the cartridge (5) is loaded into the blast hole (2) with a tamping rod (8) respectively; the cartridge (5) is held with the tamping rod (8) after loading of the cartridge (5) is completed, at this time, the hole protection casing (3) is pulled out slowly; the blast hole (2) is plugged with a stemming (7) after the hole protection casing (3) is pulled out completely; and detonation is carried out according to a design plan after charging of the blast hole (2) is completed. The present invention can maintain the integrity of the blast hole during charging, prevent hole collapse during charging, ensure that the charging length and depth in the hole meet design requirements, increase the blasting cycle footage while improving the utilization rate of the blast hole, reduce the unit consumption of civil explosives, thus achieving the purpose of reducing

the production cost and ensuring the mine production safety.

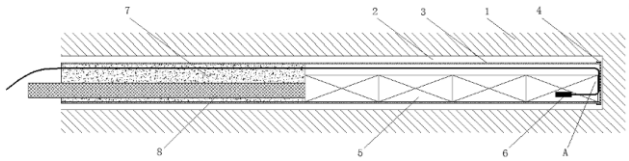

21: 2023/02411. 22: 2023/02/23. 43: 2023/05/09
51: B09B
71: SINOSTEEL MAANSHAN GENERAL INSTITUTE OF MINING RESEARCH CO., LTD., HUAWEI NATIONAL ENGINEERING RESEARCH CENTER OF HIGH EFFICIENT RECYCLE AND UTILIZATION FOR METALLIC MINERAL RESOURCES, ENGINEERING INVESTIGATION & DESIGN INSTITUTE OF SINOSTEEL MIMR CO., LTD.
72: WANG, Daya, HUA, Shaoguang, PEI, Dejian, LI, Shuqin, LI, Xiangmei
33: CN 31: 202111198498.3 32: 2021-10-14
54: METHOD FOR EXTRACTION AND HIGH-VALUE UTILIZATION OF FE, ZN AND PB IN ELECTRIC FURNACE DEDUSTING ASH
00: -
The present disclosure discloses a method for extraction and high-value utilization of Fe, Zn and Pb in electric furnace dedusting ash. A complexation reaction is carried out under the reaction condition of low temperature and normal pressure with a bulk hazardous waste, namely the electric furnace dedusting ash, as a raw material and oxalic acid as a leaching agent, so as to achieve the purpose of stepwise separation of iron and zinc resources. Under the conditions that the concentration of oxalic acid is 5-30%, the liquid-solid ratio is 10:1 to 50:1, the reaction temperature is 30-90 °C and the reaction time is 0.5-4 h, the leaching rate of Fe in the electric furnace dedusting ash can reach 92% or above, the content of Zn in a leaching slag (calculated based on ZnO) can reach 36% or above, and the purity of ferrous oxalate finally obtained can reach 97% or above. The method has a simple process, low energy consumption and a low reaction cost. The obtained ferrous oxalate and a zinc-rich slag have a higher added value and little environmental influence. The method has a good market application prospect.

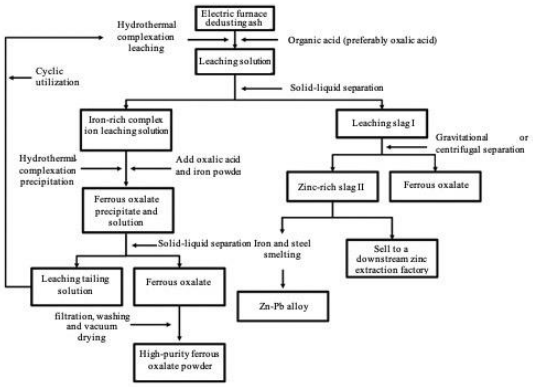

21: 2023/02412. 22: 2023/02/23. 43: 2023/05/09
51: E21C; E21F
71: SINOSTEEL MAANSHAN GENERAL INSTITUTE OF MINING RESEARCH CO., LTD., HUAWEI NATIONAL ENGINEERING RESEARCH CENTER OF HIGH EFFICIENT RECYCLE AND UTILIZATION FOR METALLIC MINERAL RESOURCES, SINOSTEEL NANJING HUAXIN TECHNOLOGY CO., LTD.
72: LIU, Peizheng, YIN, Shenghua, WANG, Leiming, LIU, Zhe, HUANG, Bin, WU, Shiping, MIAO, Xiangbiao
33: CN 31: 202210393029.5 32: 2022-04-14
54: METHOD FOR IMPROVING ROOF-CONTACTED FILLING RATE OF END SAND DISCHARGING STOPE IN UNDERGROUND MINES
00: -
The present invention discloses a method for improving a roof-contacted filling rate of an end sand discharging stope in underground mines. A stope (1) is arranged every 40 to 80 m along a strike of an ore body, an interval pillar (2) is reserved between the two adjacent stopes (1); a filling inclined shaft (3) is arranged in the interval pillar (2), a filling main pipe (4) is hung on a roadway roof of the filling inclined shaft (3), a filling connecting roadway (5) is dug to the stope (1) from an area of the filling inclined shaft (3) close to a top of the stope (1), and a filling branch pipe (6) is connected into the stope (1); blast holes are drilled to the stope in each zone in a rock drilling roadway, stepped sand discharging slots are formed at the top of the stope (1) by a method to increase depths of the blast holes zone by zone, retreating blasting is conducted from the rock drilling roadway to an end sand discharging point, ore falls into the rock drilling roadway and is transported to a draw shaft for unloading by a scraper; after stope stoping

is completed, the goaf is filled by stages, and a roof-contacted filling rate can reach 100%, which effectively controls ground pressure activities and ensures the safety in a stoping process.

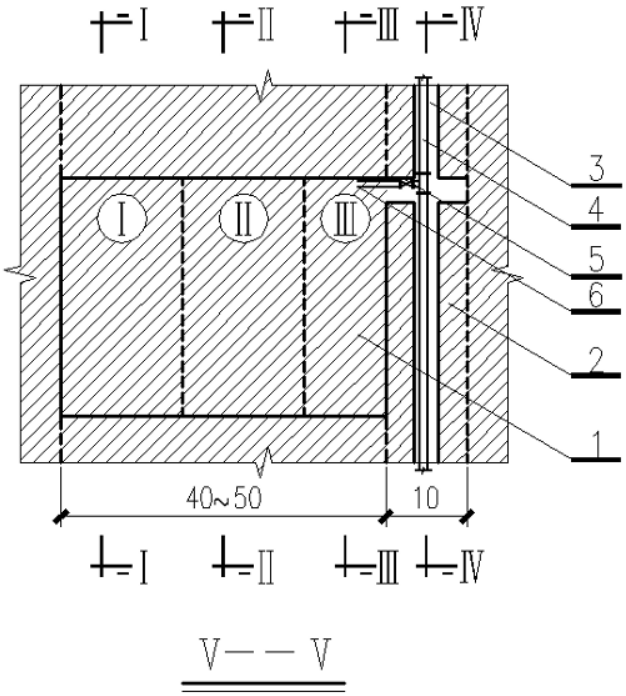

21: 2023/02413. 22: 2023/02/23. 43: 2023/05/09
51: E02D; E03F
71: SINOSTEEL MAANSHAN GENERAL INSTITUTE OF MINING RESEARCH CO., LTD., HUAWEI NATIONAL ENGINEERING RESEARCH CENTER OF HIGH EFFICIENT RECYCLE AND UTILIZATION FOR METALLIC MINERAL RESOURCES
72: CAO, Zuozhong, ZHANG, Mo, ZHANG, Xian, DAI, Yongxin, NI, Qiang, YANG, Qiangsheng, LIU, Fengkai, ZENG, Xuemin
33: CN 31: 202210265595.8 32: 2022-03-17
54: METHOD FOR TREATMENT OF GROUNDWATER DISASTER OF WEAKLY-PERMEABLE SOIL LAYER SLOPE
00: -
The present invention discloses a method for treatment of groundwater disaster of a weakly-permeable soil layer slope. A three-dimensional drainage and seepage system, a vacuum drainage aiding system, a gravity direct drainage system and a siphon drainage system are arranged respectively. The three-dimensional drainage and seepage system includes horizontal drainage and seepage well screens (8), vertical drainage and seepage well screens (17) and a water-collecting well (5). The vacuum drainage aiding system includes a vacuum air pumping pump (11) and a vacuum air pumping pipe (10). The gravity direct drainage system includes a water diversion hole and direct drainage pipes (21). The siphon drainage system includes a deep-well pump (12), a siphon pipe (15) and a siphon water supplement pipe (13). The deep-well pump (12) is mounted at a bottom of the water-collecting well (5). A water inlet end of the siphon pipe (15) extends into a lower part of the water-collecting well (5) along an inner wall of the water-collecting well (5). The siphon pipe or the direct drainage pipes can automatically discharge water in the water-collecting well. The present invention can effectively realize the smooth and centralized discharge of groundwater of the weakly-permeable soil layer slope, prevent saturation and scouring damage of a slope soil layer, and increase the lasting stability of the slope.

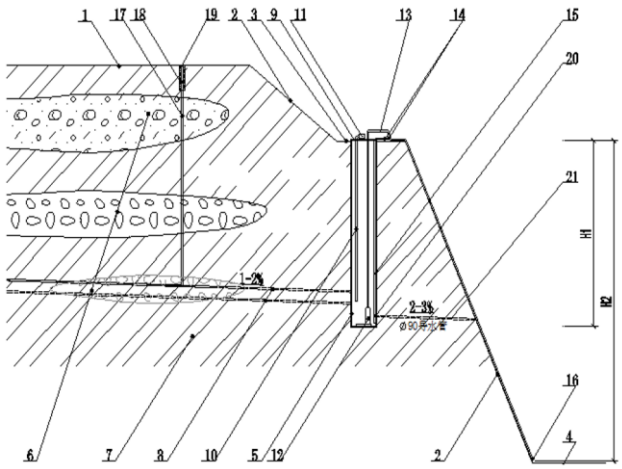

21: 2023/02414. 22: 2023/02/23. 43: 2023/05/09
51: B28D
71: SINOSTEEL MAANSHAN GENERAL INSTITUTE OF MINING RESEARCH CO., LTD., HUAWEI NATIONAL ENGINEERING RESEARCH CENTER OF HIGH EFFICIENT RECYCLE AND UTILIZATION FOR METALLIC MINERAL RESOURCES
72: XU, Chuanhua, XU, Quan, DAI, Yongxin, LI, Yue, LU, Jingbiao, REN, Xinhua, ZENG, Xuemin
33: CN 31: 202210265148.2 32: 2022-03-17
54: METHOD FOR DETERMINING ROUGHNESS OF A BLOCK STONE INTERFACE BASED ON A BLOCK STONE CONTOUR
00: -

The present invention relates to a method for determining roughness of a block stone interface based on a block stone contour, including taking a block stone digital image, obtaining block stone contour data points by image recognition, then resetting a center of gravity of block stone point data to an origin of coordinates $(0,0)$, using a Savitzky-Golay convolution to smooth a block stone contour point data set $P_s(x,y)$, converting an original contour point data set $P_1(x,y)$ and a smoothed point data set $P_s(x,y)$ into a polar coordinate data format, and performing linear interpolation, difference operation and Fourier series expansion fitting to obtain a digitized interface model $f(x,y)$ that is capable of reflecting true roughness of a block stone surface, and finally calculating a roughness value JRC of the block stone interface. This method can digitize irregular block stone contours efficiently and repeatedly, with characteristics of repeatability, efficiency, convenience, etc., and an advantage of high scientific credibility, and can be widely used in geotechnical engineering.

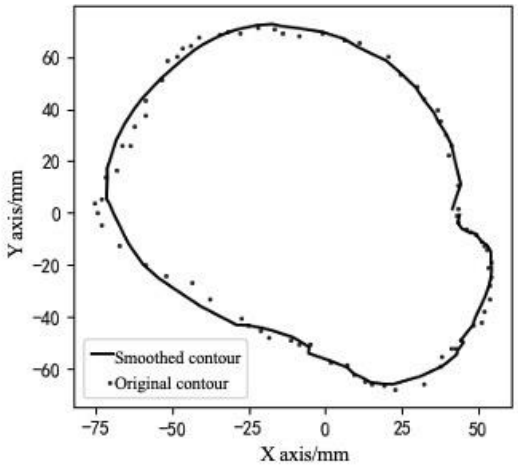

21: 2023/02415. 22: 2023/02/23. 43: 2023/05/09
51: B03D
71: SINOSTEEL MAANSHAN GENERAL INSTITUTE OF MINING RESEARCH CO., LTD., HUAWEI NATIONAL ENGINEERING RESEARCH CENTER OF HIGH EFFICIENT RECYCLE AND UTILIZATION FOR METALLIC MINERAL RESOURCES, ENGINEERING INVESTIGATION & DESIGN INSTITUTE OF SINOSTEEL MIMR CO., LTD.
72: ZHANG, Yong, LI, Liang, YANG, Renxin, YUAN, Qidong, LIN, Xiaofeng, CHEN, Zhou, LIU, Jun, WU, Hongqiang, LI, Bo, WANG, Ju
33: CN 31: 202110992158.1 32: 2021-08-27
54: FLOTATION METHOD FOR COMPLEX AND REFRACTORY COPPER-SILVER SULFIDE ORE
00: -
The invention discloses a flotation method for complex and refractory copper-silver sulfide ore, including crushing and grinding raw copper-silver sulfide ore to produce pulp, adding a predetermined amount of a collector MT-23 to the pulp to perform a rough separation on the copper-silver sulfide ore to obtain mixed copper-silver sulfide rough concentrates and rough tailings, and adding the collector MT-23 to the rough tailings to perform a mixed scavenging on copper-silver sulfide minerals; performing a fine separation twice on the mixed copper-silver sulfide rough concentrates obtained in a rough separation of copper sulfide minerals to obtain final copper-silver concentrates. The collector MT-23 is a mixture of thionitrile ester, ethionine ester and polyethylene glycol alkyl ether. The invention can significantly improve the recovery rate of copper-silver on the premise of ensuring the quality of copper-silver concentrate products. It has the advantages of a simple, stable and reliable process flow with strong applicability, and a simple reagent regime, a small reagent dosage, and convenient dosing, and solves the technical problem of beneficiation that complex and refractory copper-silver sulfide ore is difficult to use efficiently.

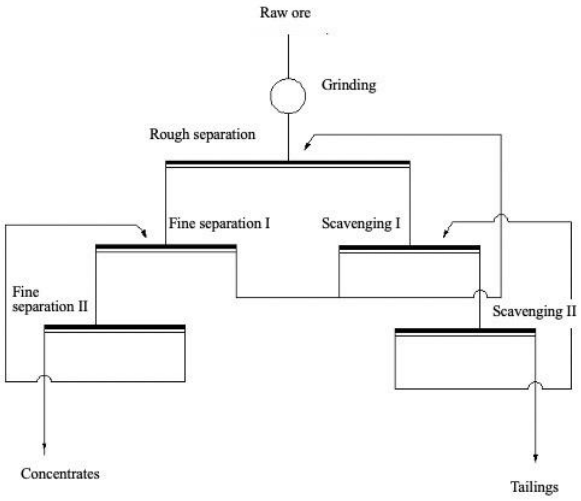

21: 2023/02419. 22: 2023/02/24. 43: 2023/05/18
51: C25C
71: Sanhe Risheng Machinery Manufacturing Co Ltd.
72: Xian Wu, Guangxing Jia
33: CN 31: 2023101279976 32: 2023-02-17
54: A LEAD-BASED ALLOY ELECTROLYTIC FURNACE
00: -
The present application relates to a lead-based alloy electrolytic furnace, comprising an electrolytic furnace body, a feeding system connected to the electrolytic furnace body and a plurality of electrode

systems disposed on the electrolytic furnace body. The electrode system comprises a base disposed on the electrolytic furnace body, a electrolytic copper wire fixed on the base and having a first end extending into the electrolytic furnace body, a graphite electrode disposed on a second end of the electrolytic copper wire, a guard electrode sleeved on the electrolytic copper wire and fixedly connected to the electrolytic copper wire and the graphite electrode, a cooling channel disposed in the electrolytic copper wire, and a water jacket joint disposed on a second end of the electrolytic copper wire and communicating with the cooling channel. The lead-based alloy electrolytic furnace in the present disclosure reduces the temperature of the electrode used in the fused salt electrolysis process by means of internal active cooling, which can make the temperature of the electrode tend to be uniform. When the temperature of the electrode fluctuates within the range meeting the process requirements, the small temperature fluctuation can reduce the loss rate of the graphite electrode caused by local cracking and falling off.

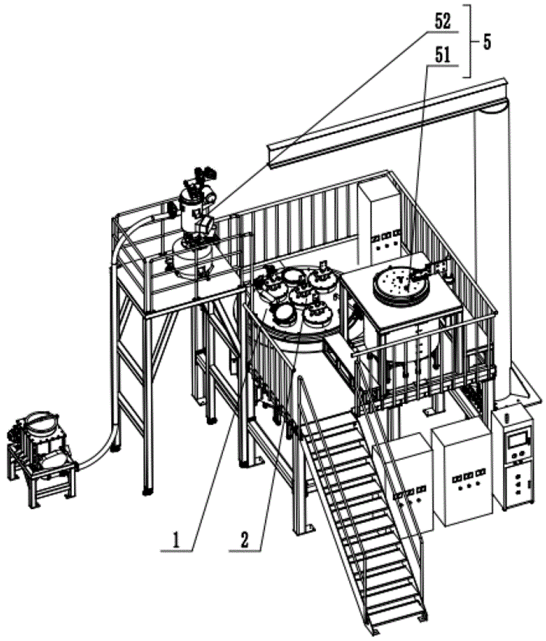

21: 2023/02427. 22: 2023/02/24. 43: 2023/05/18
51: G01M
71: Ocean University of China
72: Meng Jing, Chen Xu

54: AN EXPERIMENTAL DEVICE AND METHOD FOR COASTAL UPWELLING ON A ROTATING PLATFORM

00: -

The invention discloses a coastal upwelling experimental device of a rotating platform, including a support platform, a support frame, a driving mechanism, a positioning mechanism, a support plate, a water tank, and a portal frame. The support platform is fixed on the test platform, the support frame is fixed on the support platform, the support plate is set on the support frame, the positioning mechanism is set on the support plate, and the water tank is set on the support plate, The positioning mechanism is used to position and fix the water tank, the driving mechanism is set between the support frame and the support plate, the driving mechanism is used to drive the support plate to rotate axially or slide left and right, the gantry frame is set on the support frame, the gantry frame is equipped with a corrugated pipe, one end of the corrugated pipe is connected with a water source, and the other end extends to the bottom of the water tank. The device and method of the invention can not only simulate the specific situation of the ocean upwelling under the vortex state, but also simulate the situation of the upwelling under the water wave.

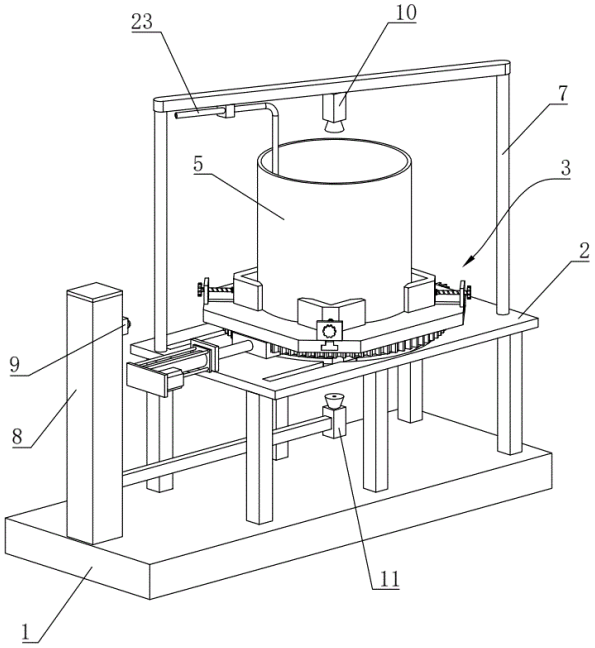

21: 2023/02429. 22: 2023/02/24. 43: 2023/05/17
51: F16M

71: Zhengzhou University of Aeronautics
72: Li Ling, Chen Shuaiwen, Yan Zhongping, Yan Yuang, Yan Zilin

54: A DATA ACQUISITION BOX BASED ON ARTIFICIAL INTELLIGENCE

00: -

The invention relates to a data acquisition box based on artificial intelligence, which solves the problem of back and forth lifting and moving when the camera collects face information; It includes an acquisition box. The inside of the acquisition box is equipped with a lifting plate and the top wall of the lifting plate is fixedly equipped with a camera. The inside of the lifting plate is fixedly equipped with a first electric telescopic rod, and the other end of the first electric telescopic rod is fixedly equipped with a positioning plate which is fixedly installed on the inside of the lifting plate. The bottom wall of the positioning plate is fixedly installed with a folding airbag. The inside of the acquisition box is equipped with a positioning slot and the inside of the positioning slot is fixedly installed with a moving plate, The moving plate is internally rotated and installed with a blocking plate, and the moving plate is connected to the side wall of the positioning slot through the first spring, the side wall of the moving plate is connected to the side wall of the positioning slot through the expansion tube, and the expansion tube is connected to the inside of the folding airbag through the pipe; It is simple, convenient and efficient to take pictures by the camera after the person is seated on the seat and positioned through the positioning plate.

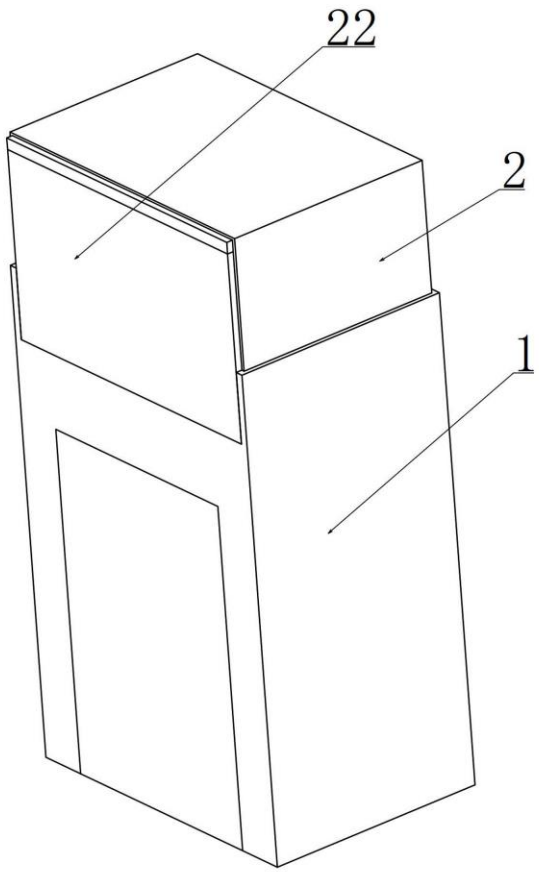

21: 2023/02430. 22: 2023/02/24. 43: 2023/05/17
51: B65F
71: Huzhou University
72: Yao jinlan

54: WASTE LIQUID COLLECTING DEVICE FOR MEDICAL NURSING

00: -

The invention discloses a waste liquid collecting device for medical care, which comprises a box body, wherein a chute is arranged in the box body; an storage block is slidably connected in the chute; the inner wall of the storage block is fixedly connected with a spring; one end of the spring is fixedly connected with a fastening ring; and the inner wall of the fastening ring is movably connected with a collecting tank. The waste liquid collecting device for medical care can collect waste liquid by using the collecting tank, and can flow in or out through the connecting pipe in combination with the function of the connecting pipe, and it can be connected with a sealing plug for sealing when not in use, and with a conveying hose to collect waste liquid when in use.

When the storage capacity of the collecting tank needs to be expanded, two collecting tanks can be connected by using the connecting pipe, the collar and the conveying hose, so as to expand.

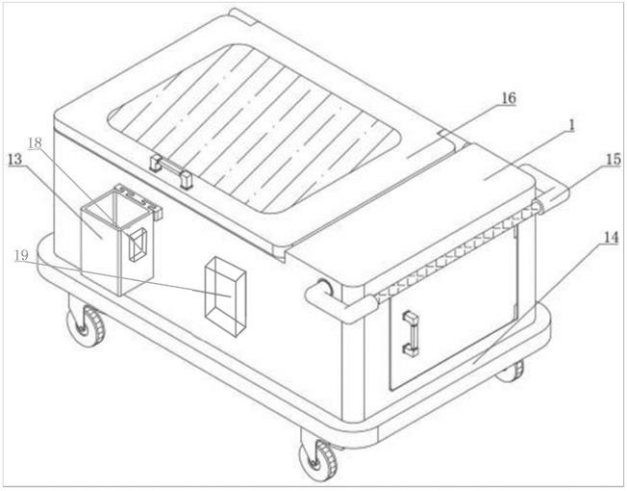

21: 2023/02431. 22: 2023/02/24. 43: 2023/05/18
51: H02J
71: Shanghai University Of Engineering Science
72: GUO, Yun, ZHAO, Feng, ZHENG, Hao, CHEN, Bin
54: USER-SIDE PHOTOVOLTAIC POWER GENERATION SYSTEM
00: -
The present invention relates to a user-side photovoltaic power generation system. The system optimizes grid-connected inverter control, and the optimized grid-connected inverter control is as follows: a photovoltaic array absorbs sunlight and converts light energy into electric energy, the electric energy is transmitted to a grid-connected inverter, a three-phase current and a three-phase voltage are respectively detected, and a frequency and a phase of the grid voltage are acquired; id and iq of the d-axis and the q-axis are obtained, id and iq are compared with Idref and Iqref respectively, and none-static-error regulation is achieved; an output signal is subjected to reverse Park conversion to obtain a modulating signal, and the modulating signal is inputted into an SPWM module. The system has the advantages that the complexity of the system is simplified, and the effects of peak load shifting and load stabilizing on the power grid are achieved.

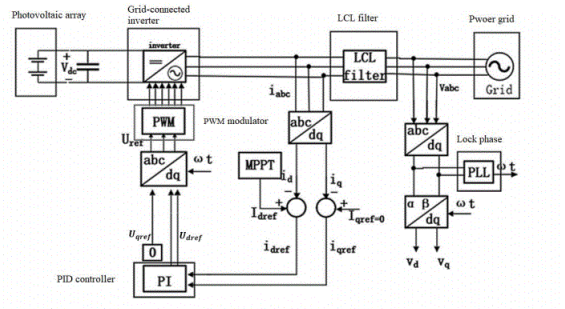

21: 2023/02432. 22: 2023/02/24. 43: 2023/05/18
51: C08B
71: China Agricultural University
72: WU, Yi, MO, Ruixia, WANG, Haotian, LIU, Tianyi, ZHANG, Mingrui, LIU, Pan
54: CHITOSAN-IRON SUPPLEMENT FOR PETS AND PREPARATION METHOD THEREFOR AND APPLICATION THEREOF
00: -
The present invention provides a chitosan-iron supplement for pets and a preparation method therefor and an application thereof. The chitosan-iron supplement for pets features good iron supplementation effect, has an immunity improvement effect and has a wide development prospect.

21: 2023/02438. 22: 2023/02/24. 43: 2023/05/18
51: H02J
71: Shanghai University Of Engineering Science
72: GUO, Yun, ZHANG, Yunshen, ZHU, Jia'ao, SHEN, Jun
54: OFF-GRID CONTROL METHOD FOR HYBRID ENERGY STORAGE DC MICROGRID
00: -
The present invention relates to an off-grid control method for a hybrid energy storage DC microgrid. A lithium battery and a supercapacitor of a DC microgrid connected to a DC bus are connected in parallel through DC-DC converters in a double power converter mode; when a system load is changed, an output power is filtered by means of a DC-DC filter to obtain a low-frequency part, the power of the low-frequency part is compensated by the lithium battery, and the remaining power of the high-frequency part is compensated by the supercapacitor. Compared with the prior art, the method has the advantages of accelerating the response of the system to load changes, effectively solving the problem of bus voltage fluctuation

caused by load changes, and guaranteeing the stability of voltage and current.

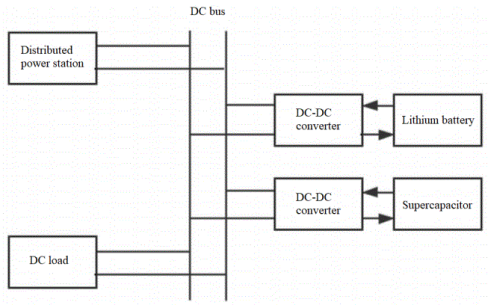

21: 2023/02445. 22: 2023/02/24. 43: 2023/05/17
51: F16H
71: Zhengzhou University of Industrial Technology
72: Cuicui Wei, Hongen Niu, Chan Feng, Binfeng Guo

54: HINGED BRAKE ACTUATING MECHANISM BASED ON DUAL SHAFT MOTOR AND USE METHOD THEREOF

00: -

The invention discloses a hinged brake actuating mechanism based on a dual shaft motor, which comprises a brake drum, wherein a dual shaft motor is arranged at the middle position inside the brake drum, and the upper end and the lower end of the dual shaft motor are respectively connected with a second shaft extension and a first shaft extension of the motor in a driving way. The conversion path to improve the efficiency of the system: electric energy to mechanical energy. The device is adjusted according to the length of the hinge slider mechanism. When the brake pedal is small, the first connecting rod gives priority to the action, which drives the first brake shoe to contact the brake drum first and brake. When the brake pedal is large, the dual shaft motor rotates rapidly, and the processes of the first connecting rod and the second connecting rod are accelerated. The first brake shoe contacts the brake drum first, and then the second brake shoe contacts, so that the contact area increases and the friction force increases.

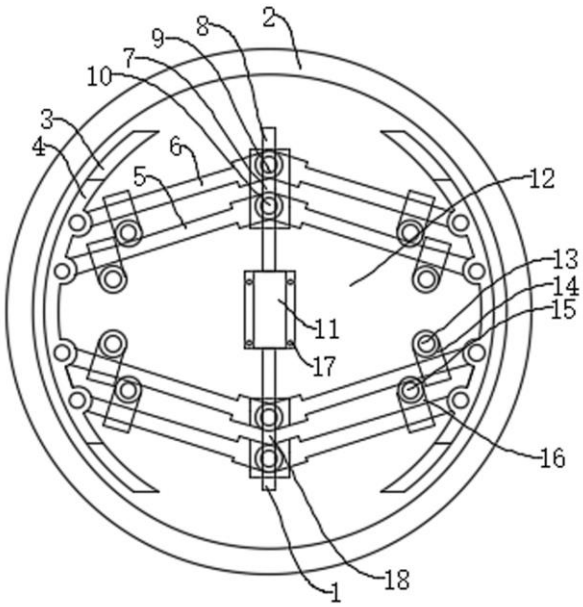

21: 2023/02446. 22: 2023/02/24. 43: 2023/05/17
51: C01B
71: Anhui Polytechnic University
72: Li Xingyang, Zhang Dandan, Wang Xiaoxue, Pan Meng

54: PREPARATION METHOD FOR A SAPO-5 MOLECULAR SIEVE WITH HIGH CRYSTALLINITY

00: -

The invention discloses a preparation method of a SAPO-5 molecular sieve with high crystallinity, which uses quartz as a silicon source to prepare the SAPO-5 molecular sieve with high crystallinity through two-step hydrothermal treatment; The method reduces the synthesis cost of SAPO-5 molecular sieve, and at the same time, it has great economic value to convert cheap quartz into molecular sieve functional materials with high added value. The method disclosed by the invention is simple and easy to implement, and the synthesized SAPO-5 molecular sieve has high crystallinity and good catalytic performance, so it has great application prospects.

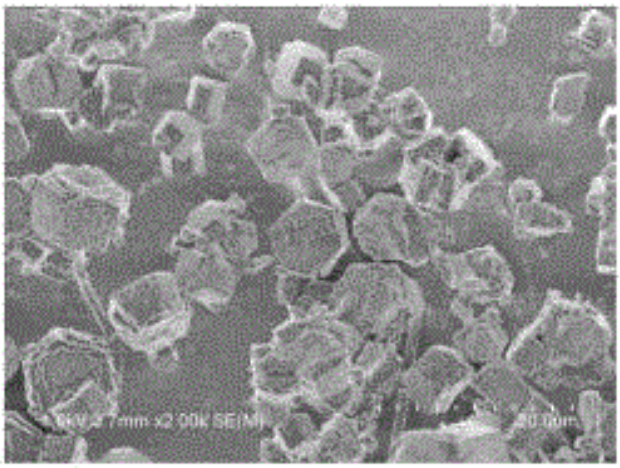

21: 2023/02448. 22: 2023/02/24. 43: 2023/05/18
51: A61K; A61P
71: Ningxia Yikang Hui Medicine Research Institute (Co., Ltd.)
72: CHEN, Kun, CHEN, Renzhi, CHEN, Renxin
54: HUI NATIONALITY MEDICINE BLOOD-GLUCOSE-REDUCING AND BLOOD-FAT-LOWERING COMPOUND
00: -
The embodiment of the present invention provides a Hui nationality medicine blood-glucose-reducing and blood-fat-lowering compound, including the following raw materials based on parts by weight: Semen coicis, Exocarpium citrulli, Potentilla discolor bunge, Radix puerariae, Cicer arietinum, Fructus lycii, Fructus crataegi, Semen arecae, Rhizoma smilacis glabrae, Radix astragali, Radix panacis quinquefolii, Radix pseudostellariae, Fructus schisandrae chinensis, Radix ophiopogonis, Radix salviae miltiorrhizae, Radix rehmanniae, Rhizoma polygonati, Fructus corni, Rhizoma polygonati odorati, Fructus rosae laevigatae, Endoconcha sepiae, Fructus mori albae, Radix trichosanthis, Herba cistanches, Rhizoma alismatis, Rhizoma anemarrhenae, Cortex phellodendri, Radix paeoniae rubra, Radix asparagi and Cortex lycii. The Hui nationality medicine blood-glucose-reducing and blood-fat-lowering compound provided by the embodiment of the present invention has excellent traditional Chinese medicine efficacy in treating diabetes without side effects, and can effectively treat diabetes and comprehensively regulate metabolic disorders; meanwhile, the drug has a certain repairing effect on pancreatic tissue injury.

21: 2023/02455. 22: 2023/02/24. 43: 2023/05/17
51: C04B
71: Dalian University of Technology
72: Chang Jun, Jiang Ting, Cui Kai
54: MULTISCALE STEEL FIBER REINFORCED SULPHOALUMINATE CEMENT-BASED REACTIVE POWDER CONCRETE
00: -
This invention provides a multiscale steel fiber reinforced sulphoaluminate cement-based reactive powder concrete, comprising the raw materials comprise 300 parts of sulphoaluminate cement, 15-30 parts of fly ash, 270-330 parts of quartz sand, 6-12 parts of micron steel fiber, 15-25 parts of steel fiber, 3-5 parts of water reducer, 0.6-1 part of defoamer and 60-66 parts of water. First, cement, fly ash, quartz sand and micron steel fiber are mixed and evenly stirred at medium and low speed, then half of water, water reducer and defoamer are added and evenly stirred; then, steel fiber is added, and the other half of water, water reducer and defoamer are added at the same time, and the stirred slurry is poured into a mold for vibrating compaction and molding; Finally, the sample is removed after standard curing. The invention adopts sulphoaluminate cement with good durability, and can improve the toughness and strength of reactive powder concrete in multiple scales by adding micron steel fiber and steel fiber with two different scales. This invention can solve the problems of poor durability and low toughness of traditional reactive powder concrete, and the production process provided by this invention is simple and low cost, which expands the engineering application scope, such as marine environment and military engineering. Moreover, the use of fly ash is beneficial to energy saving and environmental protection.

21: 2023/02457. 22: 2023/02/24. 43: 2023/05/17
51: A61K; A61P
71: REN, Li
72: REN, Li, LU, Xuejun
33: CN 31: 2022112464779 32: 2022-10-12
54: TRADITIONAL CHINESE MEDICINE COMBINED EXTRACT WITH ANTIBACTERIAL AND ANTI-INFLAMMATORY EFFECTS
00: -
The present invention relates to a traditional Chinese medicine preparation, and in particular to a

traditional Chinese medicine combined extract with antibacterial and anti-inflammatory effects. The traditional Chinese medicine combined extract with antibacterial and anti-inflammatory effects is prepared from Radix et rhizoma Rhei, Flos caryophylli, Rhizoma bletillae, Salvia plebeia and a pharmaceutically acceptable carrier. Further, a weight ratio of Radix et rhizoma Rhei, Flos caryophylli, Rhizoma bletillae and Salvia plebeia is 3-7: 1-5: 2-4: 1-3. The traditional Chinese medicine combined extract of the present invention has a significant antibacterial activity against Staphylococcus aureus, Streptococcus pneumoniae and Haemophilus influenzae, and has the effects of anti-infection, anti-inflammation and detoxification, as well as the effect of promoting wound healing; the traditional Chinese medicine combined extract can quickly relieve the discomfort of acute upper respiratory tract infection, and cure acute upper respiratory tract infection without toxic and side effects and drug resistance.

21: 2023/02458. 22: 2023/02/24. 43: 2023/05/17
51: C08B
71: Beijing Forestry University, Guangzhou DEGU Personal Care Co., Ltd.
72: JIANG, Jianxin, CHEN, Diansong, XU, Wei, ZHANG, Weiming, MA, Shihong
54: METHOD FOR PREPARING GLEDITSIA SINENSIS DEGRADING FUNCTIONAL POLYSACCHARIDE
00: -
Provided is a method for preparing G. sinensis degrading functional polysaccharides, including: in a green production method for preparing a G. sinensis functional polysaccharide by simulating the moderate germination of seeds, a variable-temperature germination process is adopted to give full play to the advantages of an enzyme production process and an enzyme-catalyzed degradation process, so as to obtain a functional polysaccharide with a controllable molecular weight. A water absorption rate of seeds is accelerated by mechanical coat breaking, thereby shortening the germination time of seeds and increasing an enzyme production rate. Through variable-temperature germination, an enzyme activity and an enzyme-catalyzed degradation efficiency of a germination process are improved simultaneously. the preparation process is green, environmentally friendly and efficient. The seeds are subjected to physical processes such as hot air treatment, crushing, screening, grinding and selecting to obtain functional polysaccharides, which may greatly reduce a water consumption and a solvent consumption.

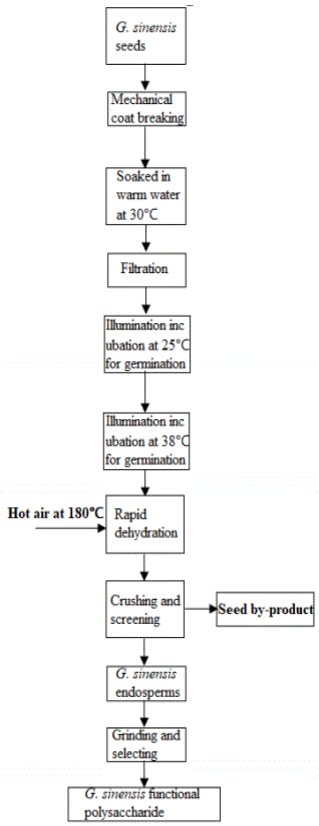

21: 2023/02464. 22: 2023/02/24. 43: 2023/05/17
51: A61H
71: Anhui University of Chinese Medicine, Anhui Provincial Hospital of Integrated Traditional Chinese and Western Medicine (The Third Affiliated Hospital of Anhui University of Chinese Medicine)
72: Zongbao Wang, Tianming Wang, Guorui Luan
54: A MULTI-SENSORY REHABILITATION TRAINING DEVICE
00: -
The invention discloses a multi-sensory rehabilitation training device, belonging to the technical field of rehabilitation medical instruments. The multi-sense rehabilitation training device comprises a shell, wherein the shell is provided with a control component, a vibration component and a power supply; Wherein, the control component, the vibration component is electrically connected with

the power supply, the control component is electrically connected with the vibration component, the vibration component is fixed on the training component, the training component includes a plurality of training models. The multi-sensory rehabilitation training device of the invention can realize multi-types of sensory training in one machine, such as the training of shallow sensation-touch, deep sensation-vibration, compound sensation-solid Drawing perception, etc., which brings convenience to the rehabilitation of sensory disorders, improves the training efficiency and effect, and is convenient to carry.

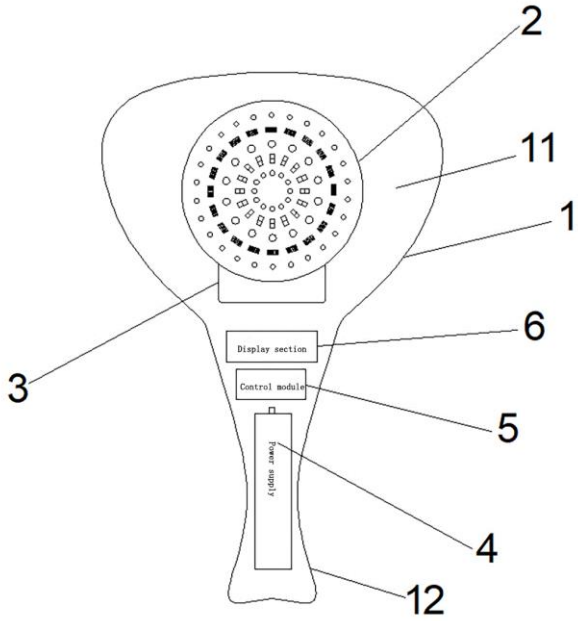

21: 2023/02465. 22: 2023/02/24. 43: 2023/05/17
51: A61H
71: Anhui Provincial Hospital of Integrated Traditional Chinese and Western Medicine (The Third Affiliated Hospital of Anhui University of Chinese Medicine)
72: Guorui Luan, Zongbao Wang
33: CN 31: 202222955993.0 32: 2022-11-07

54: A NEEDLE ACCESS DEVICE FOR ACUPUNCTURE IN TRADITIONAL CHINESE MEDICINE

00: -

The invention discloses a needle access device for acupuncture of traditional Chinese medicine, which relates to the technical field of medical instruments. The invention aims to solve the problem of convenience of storage and access of existing acupuncture needles of different specifications. At present, it is not convenient to access acupuncture needles of different specifications, so it is necessary to carry a variety of needles of different specifications before using them, and it is necessary to spend time to find and take out the corresponding specifications of needles that meet the requirements respectively when using them, which is not convenient to access needles, and it is not possible to quickly select or store needles of different specifications. The invention comprises a main body, the outer side of the main body is machined equidistant with a plurality of grooves, and the inner wall of the grooves is rotationally connected with a needle storage cylinder. The needle storage cylinder can be embedded in the interior of the groove, the needle storage cylinder is connected with the internal sliding length of the supporting block, the supporting block facing the groove is provided with a gap, the gap through the internal connecting rod. The two ends of the connecting rod are respectively connected with a side of the supporting block facing the groove and the inner wall of the groove, and the top thread of the main body is connected with a buckle cover.

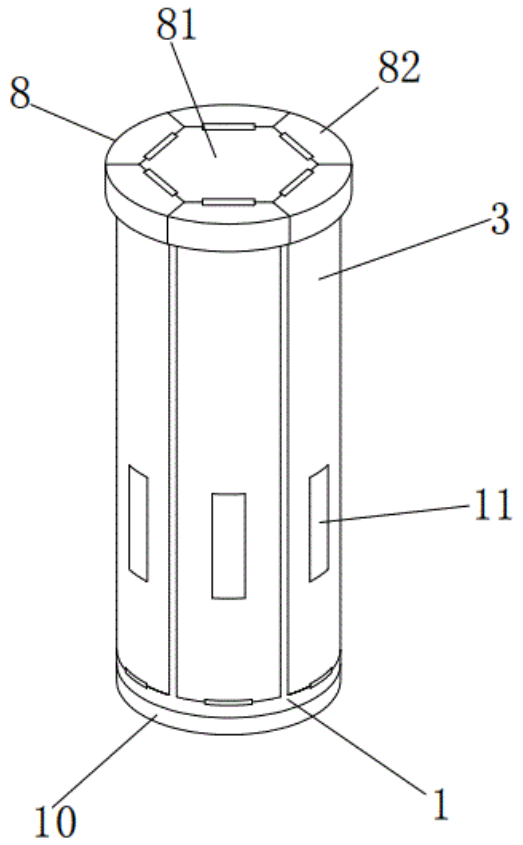

21: 2023/02476. 22: 2023/02/24. 43: 2023/05/17
51: A61K
71: Yangzhou University
72: Cai Demin, Liu Haoyu, Bao Wenbin, Hu Ping, Li Kaiqi, Li Zhaojian, Li Yanwei, Liu Yaya, Wang Yiting
33: CN 31: 202210869266.4 32: 2022-07-21

54: MEDICINE PREPARED FROM LACTOFERRIN FOR PREVENTING AND TREATING MYCOTOXIN POISONING AND USE THEREOF

00: -

The invention discloses a medicine prepared from lactoferrin for preventing and treating mycotoxin poisoning and use thereof. Through an in-vivo (intestinal tract) study of mice, vomitoxin is added into a diet of the mice to simulate mouse ingesting of feed containing mycotoxin, and the mice are administrated with a lactoferrin solution with fixed concentration through oral gavage, which can reduce expressions of inflammatory factors caused by the vomitoxin; at the same time, expressions of tight junction proteins in jejunum are enhanced, thus relieving injury of the vomitoxin to intestinal functions. In addition, the lactoferrin can further regulate and control colon microbiota of the mice treated with the vomitoxin and improve intestinal microbial metabolism, and can promote growth of intestinal villi and strengthen the absorption capacity of an intestinal tract to nutrients through the interaction between lactoferrin and vomitoxin.

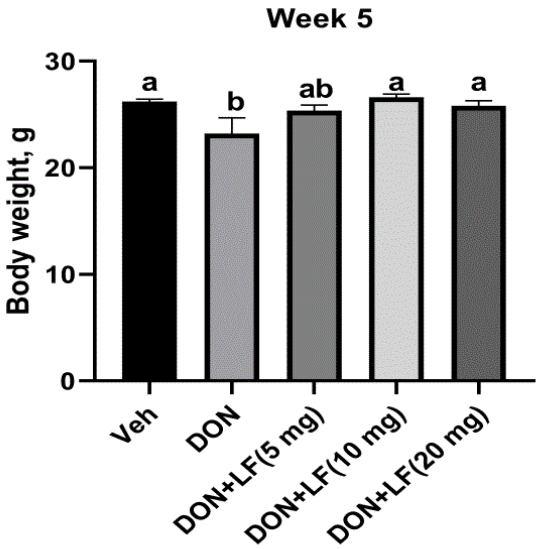

21: 2023/02477. 22: 2023/02/24. 43: 2023/05/17
51: G06T
71: Guilin University Of Electronic Technology
72: Jiaming Liang

54: AN IMAGE SEGMENTATION DEVICE AND A SEGMENTATION METHOD BASED ON DEEP LEARNING

00: -

The invention relates to the technical field of image segmentation, in particular to an image segmentation device and a segmentation method based on deep learning. The image segmentation device is composed of a sample making module, a model training module, an edge detection module and a post-processing module. It has the following beneficial effects: After the deep learn-based image segmentation device and segmentation method proposed by the invention are trained by the HED edge detection model, no parameters need to be set when used, and the individual parameters required in the post-processing of the model calculation result data can also be automatically calculated by image features. When people use, only need to specify the segmentation vector path of the image to be segmented and output, which greatly simplifies the difficulty of use.

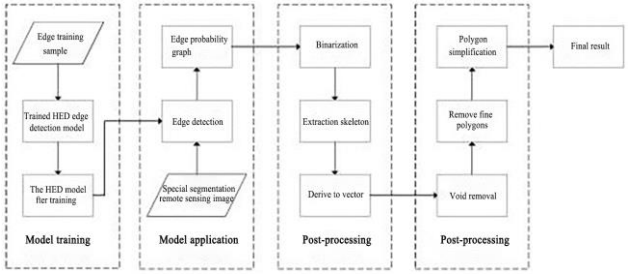

21: 2023/02478. 22: 2023/02/24. 43: 2023/05/17
51: A01G
71: Agricultural Technology Extension Station of Ningbo, Ningbo University of Finance & Economics
72: Zheng Zhenhao, Qin Fangjin, Zhang Yubin, Wang Fei, Zhai Jing

54: SPECIFIC FLOW TYPE IRRIGATION WATER METERING CONTROL DEVICE

00: -

This invention provides a specific flow type irrigation water metering control device, which relates to the technical field of specific flow type irrigation. The specific flow type irrigation water metering control device comprises a main water pipe, wherein one side of the main water pipe is connected with a connecting pipe and is communicated with the middle part of the connecting pipe, and both ends of the connecting pipe are respectively connected with a coarse water outlet pipe and a fine water outlet pipe; a connecting sleeve is fixedly connected outside the joint of the coarse water outlet pipe and the connecting pipe, a first valve is arranged on one side of the connecting sleeve, connecting plates are symmetrically and fixedly connected to the middle parts of the coarse water outlet pipe and the fine water outlet pipe, and the side walls of the connecting plates are fixedly connected with a first connecting shell and a second connecting shell, wherein the first connecting shell and the second connecting shell are internally provided with a second valve and a third valve respectively, and the upper ends of the second valve and the third valve are provided with rotating rods. The coarse water outlet pipe and the fine water outlet pipe are controlled by the first valve and the second valve, so that the flow of water is controlled, and the flow meter is used for monitoring.

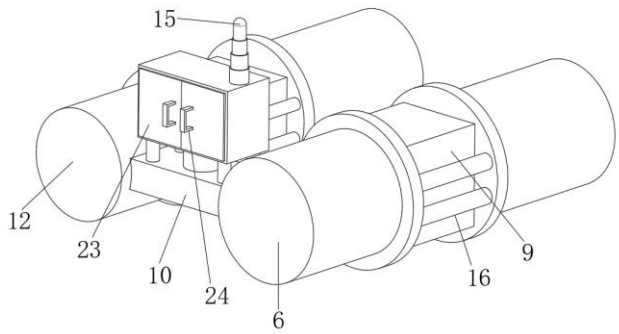

21: 2023/02479. 22: 2023/02/24. 43: 2023/05/09
51: B21D
71: Anhui Technical College Of Mechanical and Electrical Engineering
72: Liyue Wang, Kai Xu, Huayu Yang, Pei Wang, Yan Sun, Yanchun Liu

54: AN INTEGRAL SPINNING FORMING DEVICE FOR TITANIUM ALLOY PLATE

00: -

The invention relates to the technical field of spinning processing equipment, in particular to an integral spinning forming device for titanium alloy plate. It includes: the outer part of the spinning mold is provided with a processing work-piece, the edge of the spinning mold is fixedly connected with an annular flange, the surface of the annular flange is provided with a limited position through hole, the inner wall of the limit through hole is provided with a guiding chute; The surface of the connecting slider is fixedly connected with a guide slider with a tilt setting, and the guide slider is sliding connected with the guiding chute; The driving ring is located on the other side of the annular flange, and the driving ring is fixedly connected with the connecting slider; Its beneficial effect is: By opening a finite bit through hole on the surface of the annular flange, it drives the connecting slide and the return ring to rotate synchronously when the driving ring rotates. This enables the return ring to be far away from the annular flange while rotating, and then extrude the edge of the work-piece, so as to facilitate the separation of the work-piece and the spinning mold, and avoid the deformation caused by excessive local force on the edge of the work-piece.

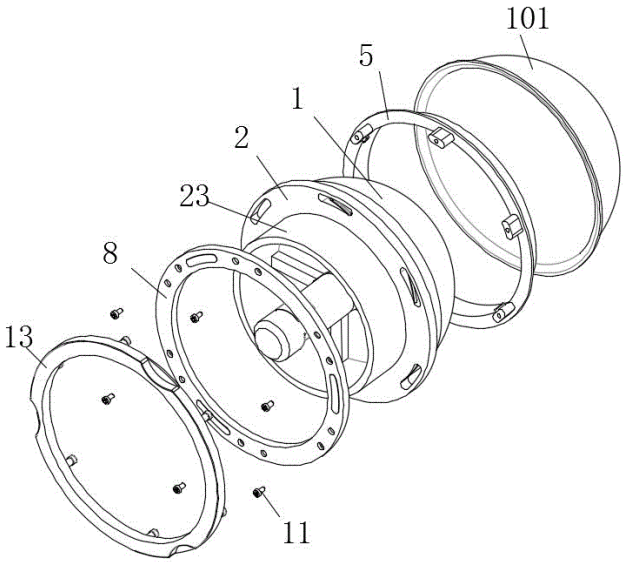

21: 2023/02480. 22: 2023/02/24. 43: 2023/05/09
51: A61K
71: Yangzhou University
72: Liu Haoyu, Cai Demin, Bao Wenbin, Hu Ping, Li Yanwei, Wang Haifei, Liu Yaya, Gu Fang, Zhao Yahui
33: CN 31: 202210760119.3 32: 2022-06-29
54: MEDICINE CONTAINING LITHOCHOLIC ACID FOR PREVENTING AND TREATING MYCOTOXIN POISONING, AS WELL AS PREPARATION METHOD AND USE THEREOF
00: -
The invention discloses a medicine containing lithocholic acid for preventing and treating mycotoxin poisoning, as well as a preparation method and use thereof. In vivo (liver) and in vitro (intestinal tract) studies of pigs show that Aflatoxin B1 is added into a piglet diet to simulate ingestion of a piglet with feed containing mycotoxin, and the piglet is administrated with a capsule containing lithocholic acid through oral gavage, which can effectively prevent liver injury and liver inflammation of the piglet caused by aflatoxin B1; and by adding lithocholic acid for pretreatment on pig ileum epithelial cells, the injury effect of vomitoxin on the pig ileum epithelial cells can be relieved.

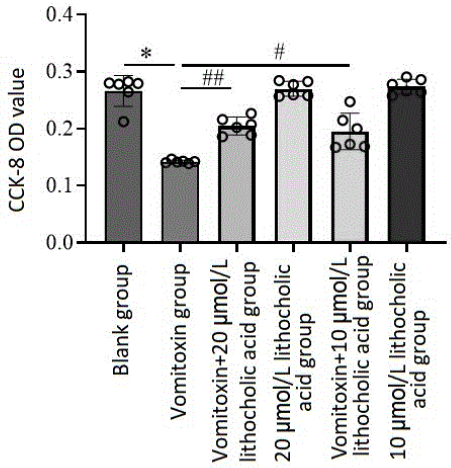

21: 2023/02481. 22: 2023/02/24. 43: 2023/05/09
51: C22C
71: Xiangtan University
72: Zhu Daibo, Wu Na, Li Juan, Jiang Chaohua, Li Jingxin, Zhang Yating
54: METHOD FOR PREPARING THE HIGH-MODULUS 6061 ALUMINUM ALLOY PLATE WITH LOW POROSITY
00: -
The invention discloses a method for preparing the high-modulus 6061 aluminum alloy plate with low porosity, and relates to a method for preparing the aluminum alloy sheet. The purpose of the invention is to overcome the problems that Be and aluminum alloy are immiscible, the porosity of ingot is high, segregation phenomenon is serious and processing is difficult when using Be modified aluminum alloy. Methods: (1), Mixing; (2), Powder rolling; (3) Rapid hot pressing sintering; (4), Cold isostatic pressing; (5), Milling; (6), Finish rolling. In the invention, Cu-Be powder is used as a raw material to replace the addition of pure Be, so as to solve the problem that aluminum matrix and BE are immiscible; And the short-process continuous preparation for aluminum alloy with low porosity and high stiffness is realized. The density of the prepared high-modulus 6-series aluminum alloy sheet is 99.5% ~ 99.8%. And the invention can obtain a high-modulus 6061 aluminum alloy plate.

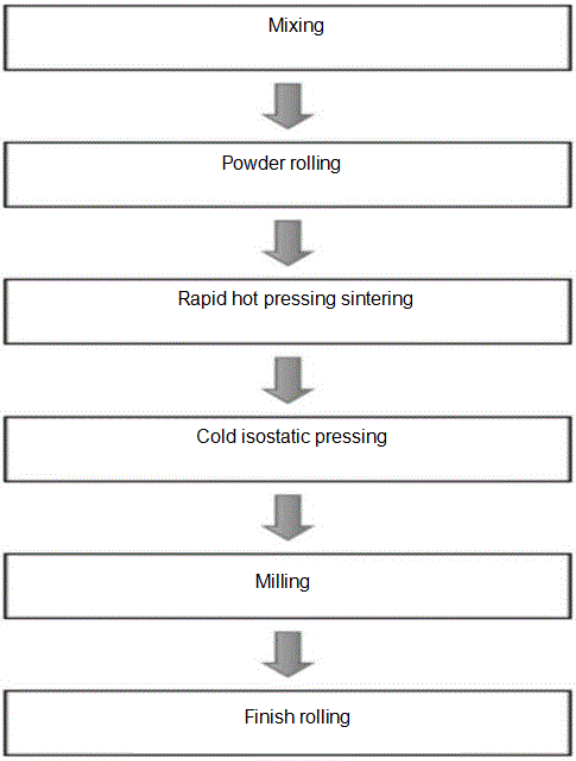

21: 2023/02482. 22: 2023/02/24. 43: 2023/05/09
51: G10D; G10H
71: Jiao Huang
72: Jiao Huang
54: A DIGITAL MIDI WIND SYNTH
00: -
The invention discloses a digital MIDI wind synth, which comprises a shell and a control circuit board; one end of the shell is provided with a mouthpiece, and the mouthpiece communicates with the inside of the shell; one side of the shell is provided with a multi-function display screen, a multi-function digital switch, shortcut keys, an octave switching roller, a portamento function bar, a multi-function CC command mapping key, a pitch bend key, a battery compartment, a data output charging port and a power switch, arranged sequentially from the mouthpiece end to the other end and connected to the control circuit board; a other side of the shell is provided with a multi-function mapping key and scale keys arranged sequentially from the end of the mouthpiece to the other end and connected to the control circuit board. The invention adds a blowing function on the basis of the traditional hand-playing electronic musical instrument, realizes switching and adjustment of timbre and tonality through a plurality of switching keys, and can switch many kinds of timbres to realize the function of blowing.

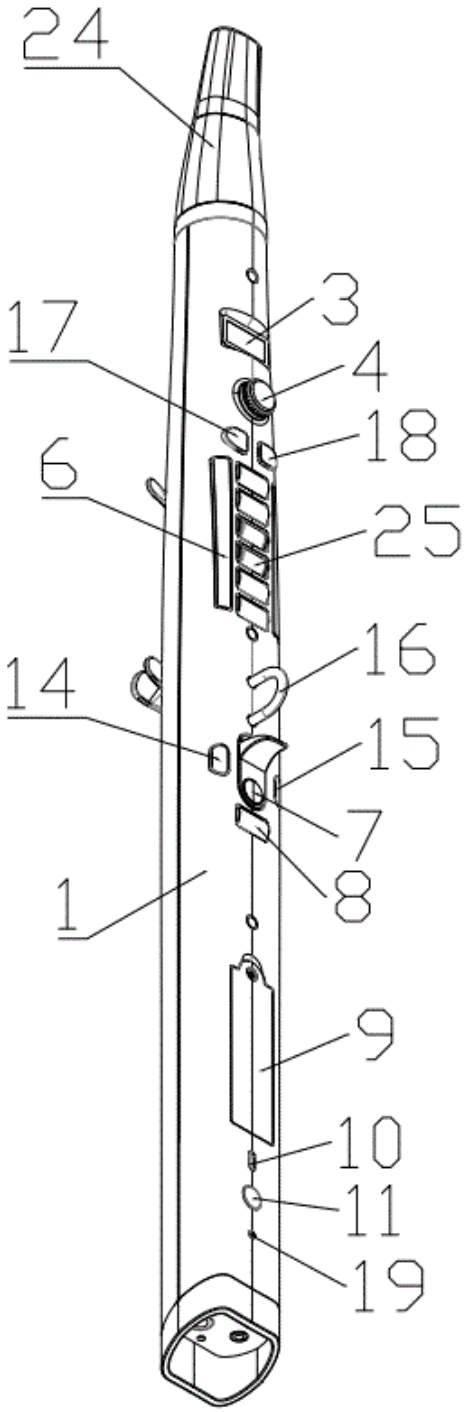

21: 2023/02483. 22: 2023/02/24. 43: 2023/05/09
51: C12N
71: Southwest Forestry University

72: Zhenghai Sun, Liping Li, Liangyu Fan, Jia Liu, Juanjuan Xu, Fan Yang
33: CN 31: 202211294267.7 32: 2022-10-21
54: ISOLATION OF IRON-PROMOTING ENDOPHYTIC FUNGI FROM THE SEEDS OF WOOD BUTTERFLY AND ITS APPLICATION
00: -
The invention discloses a separation method of wood butterfly seed fe-promoting endophytic fungi and its application, in which the separation methods mainly include: S1: seed pretreatment; S2: Isolation of endophytic fungi; S3: Identification of strain ITS sequence; S4: Determination of ferrogenic carrier activity of strain; The endophytic fungi Penicillium ochrochloron, which had the strongest iron-carrying capacity, was inoculated into soybean seedlings. It was verified that the endophytic fungi isolated from the seeds of C. xyloides significantly promoted the transport and absorption of iron in soybean. It is of great significance to study endophytic bacteria promoting iron absorption in plants.

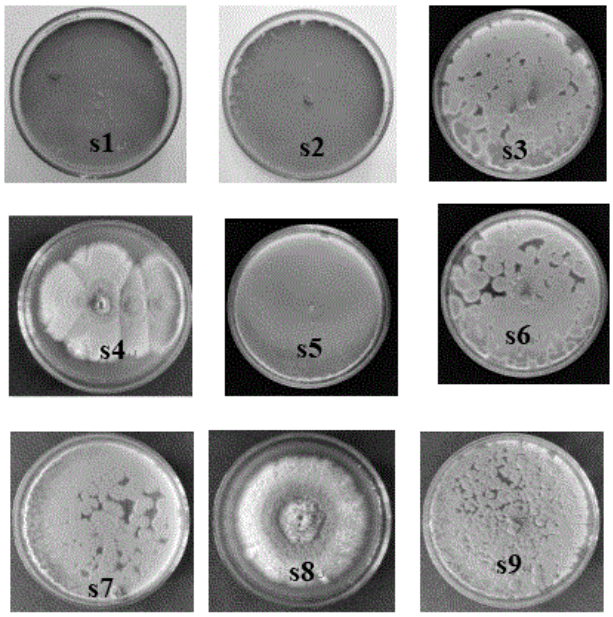

21: 2023/02486. 22: 2023/02/24. 43: 2023/05/09
51: G01V
71: Kunming University of Science and Technology
72: Hao He, Lei Wang, Yiming Xu, Enyi Zhu, Yuehua Ma, Dong Zhao, Wenqi Ren, Xufeng Tian, Yongle Yan, Yizhuo Wen, Dingyuan Huang, Zonghe Jiang, Zhendong Zhu, Jiajin Xu
33: CN 31: 202210951678.2 32: 2022-08-09
54: A PREDICTION METHOD FOR DEEP PROSPECTING OF HYDROTHERMAL VEIN TYPE TIN-TUNGSTEN POLYMETALLIC DEPOSIT
00: -
The invention discloses a deep prospecting prediction method for hydrothermal vein type stann-tungsten polymetallic deposit. This method is based on the fine analysis of large scale tectonic-altered rock facies of different middle sections in the mining area, the identification of mechanical properties of typical rock and ore control structures, combined with geochemistry of borehole tectonic-altered rock, isotope dating, fluid inclusion geochemistry, and the verification of wide-area electromagnetic and high-precision surface magnetic survey and other geophysical prospecting means. In order to find out the fracture mechanical transformation characteristics and ore-controlling effect of controlling tin tungsten ore body and lead zinc ore body, reveal the connection between these two ore-controlling faults, infer the characteristics of deep structural junction zone, divide ore-controlling structural system, summarize the structural ore-controlling rule and alteration zoning rule of the deposit, delineate the alteration geochemical anomaly area, and propose the deep favorable ore-prospecting area. Finally, the prospecting model is established. The invention provides a basis for the prediction and exploration of the hidden ore body in the deep edge of a mine.

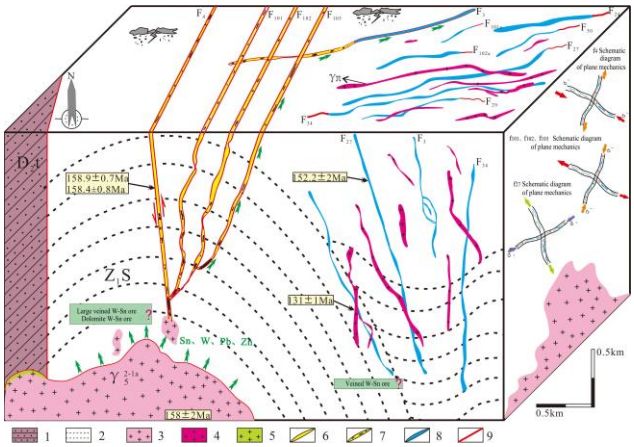

21: 2023/02487. 22: 2023/02/24. 43: 2023/05/17
51: G08G
71: Guilin University Of Electronic Technology
72: Xiaohan Sun
54: VEHICLE VIOLATION DETECTION SYSTEM BASED ON DEEP LEARNING
00: -
The invention relates to the technical field of traffic operation and maintenance, in particular to a vehicle

violation detection system based on deep learning. It includes: detection and identification module, used to connect the road camera, through the front end display interface, real-time detection of the picture taken by the monitoring, display the intersection of vehicles within a period of illegal behavior and traffic flow statistics; Violation detection module. Through multi-threading vehicle detection, judge whether the vehicle has illegal behavior; The beneficial effects are: The deep learning-based vehicle violation detection system proposed by the invention combines computer vision, deep learning, image processing and other technologies to realize a variety of traffic scene functional applications according to different traffic scenes. The single unit at a single intersection is taken as the construction point to realize vehicle and lane frame detection and license plate recognition. Motor vehicles run red lights, illegal crossing lines, reverse traffic detection, not according to the regulations of the lane.

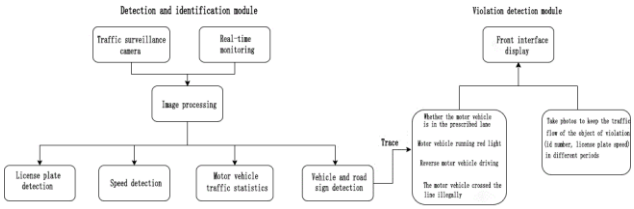

21: 2023/02490. 22: 2023/02/24. 43: 2023/05/18
51: G01R; H02H
71: Wuhu Technology and Innovation Research Institute, AHUT
72: WU, Ziheng, WANG, Jingyuan, ZHAO, Yuan, WANG, Wenyan, LI, Cong

54: AUTOMATIC MOTOR FAULT IDENTIFICATION METHOD AND SYSTEM, ELECTRONIC DEVICE AND MEDIUM

00: -

The present invention discloses an automatic motor fault identification method and system, an electronic device and a medium, and belongs to the field of motor fault identification. Improved sparse autoencoders are adopted and combined with a motor fault identification model constructed by a Softmax classifier to identify the feature data of vibration signals from a motor to be identified, so that errors in learning the features for reconstruction by using the sparse autoencoders can be reduced, the accuracy of motor fault identification is improved and the work efficiency of motor fault maintenance is further improved.

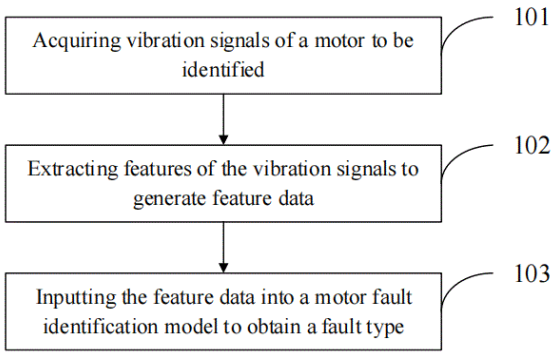

21: 2023/02508. 22: 2023/02/24. 43: 2023/05/17
51: C08J
71: SHANGHAI INSTITUTE OF TECHNOLOGY
72: He Yan, Ma Xia, Li Min

54: GAMMA-POLYGLUTAMIC ACID MOLECULARLY IMPRINTED POLYMER MEMBRANE, PREPARATION METHOD AND MULTIFUNCTIONAL BIOLOGICAL ADSORPTION MATERIAL

00: -

The invention discloses a Gamma-polyglutamic acid molecularly imprinted polymer membrane, a preparation method and a multifunctional biological adsorption material. According to the invention, mix chitosan with polyethylene glycol 2000 or polyethylene glycol 4000, add glacial acetic acid solution into it, and fully dissolve in water bath; After chitosan is dissolved, add Gamma-polyglutamic acid into the system, and after fully dissolve, add glutaraldehyde to carry out polymerization reaction to obtain membrane casting solution; Flow the membrane casting solution on a clean glass plate placed horizontally for membrane casting, and then soak and crosslink the obtained membrane in sulfuric acid solution; And wash the obtained membrane with alkaline solution, then wash with distilled water until the existence of Gamma-polyglutamic acid cannot be detected in the washing solution, and finally dry the membrane to form. The preparation method for non-molecularly imprinted membrane is the same as that of imprinted membrane, except that no template molecules are added. For convenience, we refer to molecularly imprinted membrane as MIP and non-molecularly imprinted membrane as NIP.

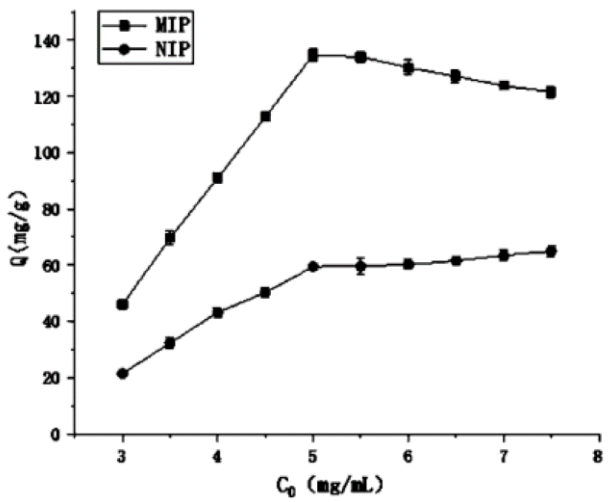

21: 2023/02509. 22: 2023/02/24. 43: 2023/05/10
51: A61K
71: Kunming children's Hospital
72: Li Li, Lvyan Tao, Xiaoning Liu, Weiyi Kang, Li Sun, Yuantao Zhou, Yu Zhang, Xiaoli He
33: CN 31: 202210988871.3 32: 2022-08-17
54: A METHOD FOR ESTABLISHING ALPHA7-NACHR GENE KNOCKOUT MOUSE MODEL
00: -
The invention discloses a method for establishing alpha7-nAChR gene knockout mouse model, including: S1: target sequence sequencing confirmation; S2: Cas9/sgRNA design; S3: RNA preparation of Cas9/sgRNA; S4: Microinjection of Cas9/sgRNA; S5: mouse tail genome DNA extraction; S6: Mouse genotypes were identified. Establishment of S7: alpha7-nAChR overexpression mouse model; The invention uses CRISPR/Cas9 technology to construct alpha7-nAChR gene knockout mouse model, and proves that alpha7-nAChR gene knockout is successful and stable inheritance through gene detection.

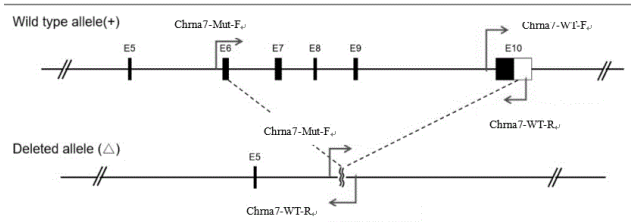

21: 2023/02512. 22: 2023/02/24. 43: 2023/04/20
51: C02F
71: NANJING NORMAL UNIVERSITY
72: ZHANG, MINGLI, LIU, RUIHAN, WANG, YANHUA
33: CN 31: 2022113967563 32: 2022-11-08
54: RAINWATER COLLECTION AND PURIFICATION DEVICE
00: -
Disclosed is a rainwater collection and purification device, including a collection tank arranged on the roof and a primary filter pipe connected to the collection tank, and the other end of the primary filter pipe is connected to a drainage pipe; the water outlet of the drainage pipe is divided into two ways, one way is a filter pipe used for rainwater purification, and the other way is an outlet pipe for directly conveying rainwater; the filter pipe is composed of a fine sand filter pipe, an activated carbon filter pipe, a reverse osmosis membrane filter pipe and an air filter pipe connected in sequence in the water flow direction, the filter pipe units are all bamboo-shaped pipes, each bamboo-shaped pipe is provided with a metal filter mesh at both ends, the bamboo-shaped pipes are connected to each other by magnetic sealing rings , and the filter pipe and the outlet pipe are both provided with a faucet and the bottom of the pipes is sealed and grounded. The device can be used for flat-roofed houses, it has a simple structure for easy detaching and cleaning, and can solve the problem of water shortages and reduce the cost of water usage, the installation method of the device is simple and easy, the cost is lower, and it is convenient for renovation of existing houses.

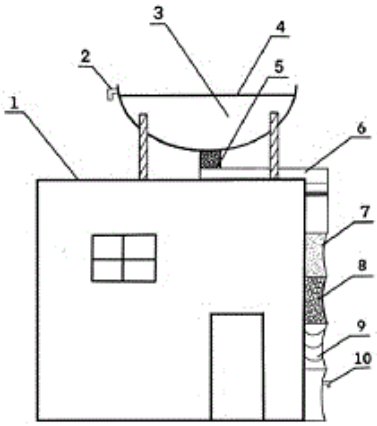

21: 2023/02513. 22: 2023/02/24. 43: 2023/04/20
51: C02F
71: NANJING NORMAL UNIVERSITY

72: TIAN, JIAMING, WANG, YANHUA
33: CN 31: 2022116391207 32: 2022-12-20
54: METHOD FOR RESTORING RIVER SEDIMENT BY MEANS OF BIOCHAR PREPARED FROM AGRICULTURAL WASTE
00: -
Disclosed is a method for restoring river sediment by means of biochar prepared from agricultural waste, which belongs to the technical field of water pollution treatment. The method includes steps: obtaining raw materials, preparing the biochar, and modifying the biochar. According to the present disclosure, the biochar is prepared by taking the agricultural waste as the raw materials, and then the biochar is modified to be buried in the river sediment to improve an environment of a river water body. Characteristics of the biochar are extremely suitable for alleviating water body pollution, and by taking the agricultural waste as the raw materials, more raw materials rather than one or more kinds of specific materials can be selected. In addition, according to the present disclosure, cost is low, a pollution problem caused by the agricultural waste can be alleviated to a certain extent, and secondary resource utilization of the agricultural waste can be realized. Moreover, a pollution level of the river water body can be effectively reduced, an ecological environment of the river water body can be protected, ecological balance of the river water body can be maintained, and a possibility of harming an animal, a plant and even a human body can be reduced.

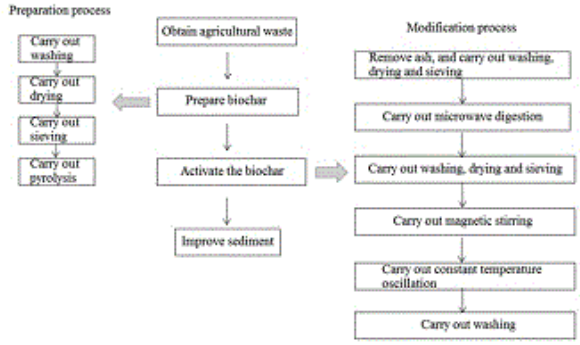

21: 2023/02514. 22: 2023/02/24. 43: 2023/04/20
51: C30B
71: INSTITUTE OF GEOCHEMISTRY CHINESE ACADEMY OF SCIENCES
72: DAI, LIDONG, HU, HAIYING
33: CN 31: 202211626670.5 32: 2022-12-16
54: METHOD FOR PREPARING VANADIUM-DOPED AND HIGH-WATER SINGLE-CRYSTAL MANGANOCHROMITE UNDER HIGH-TEMPERATURE AND HIGH-PRESSURE CONDITION
00: -
A method for preparing vanadium-doped and high-water single-crystal manganochromite under a high-temperature and high-pressure condition comprises: preparing a cylindrical manganochromite sample using solid roseate trigonal rhombus manganese carbonate crystals, solid chromium(III) acetate hydroxide crystalline powder, solid vanadium(IV) oxide acetylacetonate powder, solid oxalic acid, solid pyrochroite powder, solid chromium hydroxide powder and liquid dilute nitric acid as starting materials; preparing two water-sourced discs from the pyrochroite powder and the chromium hydroxide powder according to a weight ratio of 4:1; and placing the two water-sourced discs at two ends of the cylindrical manganochromite sample, and then placing the cylindrical manganochromite sample with the water-sourced discs in a double-layer experimental sample chamber with an inner tube being a graphite tube and an outer tube being a gold-palladium alloy tube for high-temperature and high-pressure reaction to obtain single-crystal manganochromite. The present invention solves the problem that there is no technique for preparing large-grained, vanadium-doped and high-water single-crystal manganochromite under a high-temperature and high-pressure condition at present.

21: 2023/02515. 22: 2023/02/24. 43: 2023/04/20
51: C30B
71: INSTITUTE OF GEOCHEMISTRY CHINESE ACADEMY OF SCIENCES
72: DAI, LIDONG, HU, HAIYING
33: CN 31: 2022116441282 32: 2022-12-20
54: METHOD FOR PREPARING NICKEL-DOPED AND HIGH-WATER SINGLE-CRYSTAL COCHROMITE UNDER HIGH-TEMPERATURE AND HIGH-PRESSURE CONDITION
00: -
A method for preparing nickel-doped and high-water single-crystal cochromite under a high-temperature and high-pressure condition comprises: preparing a cylindrical cochromite sample using solid basic cobalt carbonate powder, solid chromium(III) acetate

hydroxide crystalline powder, solid nickel stearate powder, solid oxalic acid powder, solid chromium hydroxide powder, solid nickel hydroxide powder and liquid dilute nitric acid as starting materials; preparing water-sourced discs from the chromium hydroxide powder and the nickel hydroxide powder according to a weight ratio of 4:1; and placing the two water-sourced discs at two ends of the cylindrical cochromite sample respectively and then placing the cylindrical cochromite sample with the water-sourced discs in a double-layer sample chamber for high-temperature and high-pressure reaction to obtain single-crystal cochromite. The present invention solves the problem that there is no technique for preparing large-grained, nickel-doped and high-water single-crystal cochromite under a high-temperature and high-pressure condition, and can obtain large-grained, nickel-doped and high-water single-crystal cochromite experimental samples.

21: 2023/02516. 22: 2023/02/24. 43: 2023/04/20
51: C30B
71: INSTITUTE OF GEOCHEMISTRY CHINESE ACADEMY OF SCIENCES
72: DAI, LIDONG, HU, HAIYING
33: CN 31: 202211643569.0 32: 2022-12-20
54: METHOD FOR PREPARING TITANIUM-DOPED AND HIGH-WATER SINGLE-CRYSTAL COULSONITE UNDER HIGH-TEMPERATURE AND HIGH-PRESSURE CONDITION
00: -
A method for preparing titanium-doped and high-water single-crystal coulsonite under a high-temperature and high-pressure condition comprises: preparing a cylindrical coulsonite sample using solid trigonal siderite crystals, solid bis(2,4-pentanedionato)vanadium(IV) oxide powder, liquid titanium(IV) isopropoxide, solid oxalic acid powder, solid a-phase goethite powder, solid titanium hydroxide powder and liquid dilute nitric acid as starting materials; preparing water-sourced discs from the a-phase goethite powder and the titanium hydroxide powder according to a weight ratio of 4:1; and placing the water-sourced discs at two ends of the cylindrical coulsonite sample, and then placing the cylindrical coulsonite sample with the water-sourced discs in an inner tube of a double-layer sample chamber for high-temperature and high-pressure reaction to obtain single-crystal coulsonite. The present invention solves the problem that there is no technique for preparing large-grained, titanium-doped and high-water single-crystal coulsonite under a high-temperature and high-pressure condition at present, and can obtain large-grained, titanium-doped and high-water single-crystal coulsonite experimental samples.

21: 2023/02518. 22: 2023/02/24. 43: 2023/05/17
51: B23K
71: Guizhou Panjiang Refined Coal Co. Ltd., Guizhou University, Shandong University of Science and Technology
72: Mingzhong Wang, Zhenqian Ma, Yunlin Shuai, Lishuai Jiang, Ruichong Guan, Hang Mu, Jimin Zhang
54: A HIGH PRESSURE WATER DRILLING MINING DEVICE FOR STEEPLY INCLINED COAL SEAM
00: -
The invention discloses a high-pressure water drilling mining device for a steeply inclined coal seam, comprising a water drilling rig, a crusher, a screw conveyor, a slime pump and a slime dewatering device. The crusher is installed in a groove in a downhole roadway and the hopper of the crusher is lower than the bottom plane of the downhole roadway. The water drilling rig is installed on a mobile trolley. The discharge port of the crusher is sealed and connected to the feed port of the screw conveyor. The screw conveyor is installed in the downhole roadway. The discharge port of the screw conveyor is sealed and connected to the feed port of the slime pump. The discharge port of the slime pump is connected to the slime dewatering device and the slime pump is installed outside the downhole roadway. The invention realizes the rapid water mining of inclined coal seam, avoids the spark caused by drilling in the mining process, makes the mining safer, breaks up into slime, and is more conducive to the conveying of screw conveyor. Under the negative pressure generated by the slime pump, it is more conducive to rapid discharge, more thorough discharge, screw conveying, reducing the maintenance probability of the equipment and improving the conveying efficiency.

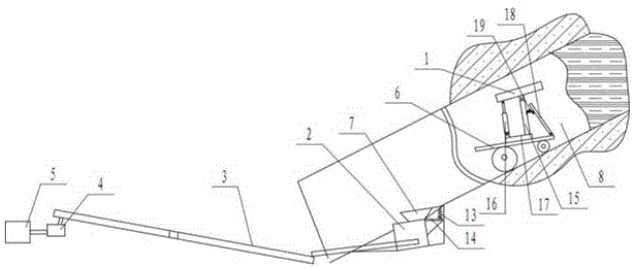

21: 2023/02539. 22: 2023/02/24. 43: 2023/05/18
51: A61B; G01N
71: RESOLVE DIAGNOSTICS PVT. LTD.
72: DAHAKE, Ritwik, BHATKHANDE, Monika, KHANNA, Ram
33: IN 31: 202021036287 32: 2020-08-24
54: APPARATUS, DEVICE AND METHOD FOR PHOTODETECTION OF PATHOGENS
00: -
Described herein is novel, economical device for photodetection of presence of a target nucleic acid in a sample. Accordingly, the detection takes place based on difference in light intensities. The invention further describes the method and apparatus for detection of target nucleic acid using said device.

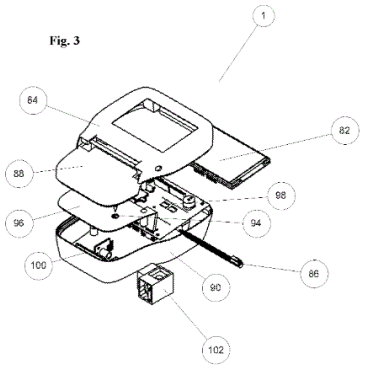

21: 2023/02563. 22: 2023/02/24. 43: 2023/05/16
51: A01C
71: North China University of Science and Technology
72: MU Yu, FENG Xiaojie, LI Jia, WANG Yongheng
33: CN 31: 202211577205.7 32: 2022-12-09
54: A PORTABLE ATOMIZING SPRAY DEVICE
00: -
A portable atomizing spray device is disclosed in the invention, comprising a hand lever, a sprayer, an intake pipe and a liquid inlet pipe, the hand lever is fixedly connected with the center of the side of the sprayer, and a group of fine stomatas are opened in the upper left corner of the sprayer; The intake pipe is pressure-tightly connected with the fine stomatas of the sprayer and a group of fine drain holes are opened in the lower left corner; A fan is installed inside the sprayer, and the rotation direction of the fan is parallel to the liquid inlet direction in the hand lever; A lifting structure is fixed on the inner side wall of the front section of the hand lever, and one end of the liquid inlet pipe is embedded in the rear section of the hand lever, the other end is arranged in the disinfectant tank; Pressurized air is input in parallel from the hand lever and the intake pipe at the same time. The device can reduce the burden of the user's arms and improve the atomization effect.

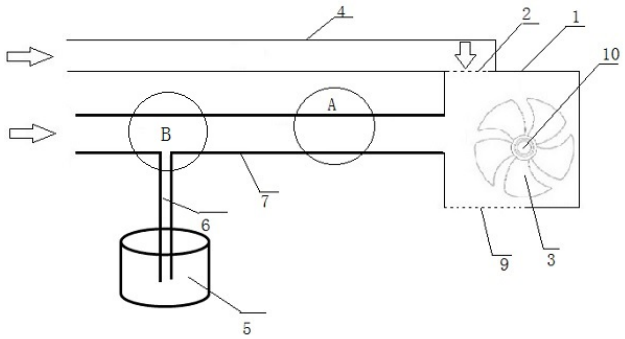

21: 2023/02564. 22: 2023/02/24. 43: 2023/05/16
51: B05B
71: North China University of Science and Technology
72: FENG Xiaojie, LI Jia, CHEN Hongwei, MU Yu
33: CN 31: 202211576090.X 32: 2022-12-09
54: A FOLDABLE SPRAY DEVICE
00: -
A foldable spray device is disclosed in the invention, which comprises a connecting rod and a foldable sprayer, and a liquid inlet pipe is inserted into the front end of the connecting rod; Pressurized air is accessed by air intake of the connecting rod; The shell of the foldable sprayer comprises marginal body at two ends and an intermediate, and the marginal body is connected with the intermediate by a rotating shaft; The foldable sprayer also comprises foldable assembly that contains sleeves, compressed springs,casing springs, recovery springs, contacts and chucks, wherein the sleeve is sleeved with the connection between the marginal body and the intermediate, and one end of the casing spring is connected with marginal body, the other end is connected with the edge of the sleeve, the lower part of which is provided with opening; The contact is fixed on one end of the compressed spring

through the intermediate, and the other end of the compressed spring is connected with the inner wall of the intermediate; The device is convenient for it can be folded in using to change the spray direction.

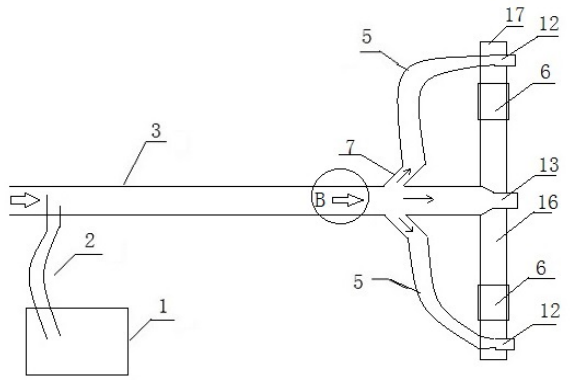

21: 2023/02565. 22: 2023/02/24. 43: 2023/05/16
51: H05K
71: North China University of Science and Technology
72: GAO, Jing, SHEN, Hong, ZHAO, Jianhui
33: CN 31: 202211650026.1 32: 2022-12-21
54: A SERVER CABINET FOR SIMPLE INSTALLATION
00: -
A server cabinet for simple installation is provided in the invention, which relates to the field of server technology, comprising a cabinet, mounting plates, a press assembly, an air-supply assembly and mobile assemblies, the mounting plate is fixed on one side of the cabinet and is provided with a through-hole for ground screw to pass through, and a circular airway is arranged in the mounting plate; The mobile assembly is disposed on the side of the mounting plate away from the cabinet to provide rolling support for the cabinet; The air-supply assembly is arranged on one side of the mounting plate, and both the air-supply assembly and the mobile assembly are interconnected with the circular airway; An exhaust tube is disposed on the side wall of the mounting plate and an outlet valve is arranged in the exhaust tube. Compared with the prior art, in the example of the invention, the server cabinet can be moved onto the ground bolt, and the relative position between the mounting hole in the server cabinet and the ground bolt can be adjusted flexibly, achieving good effect and high efficiency in installation.

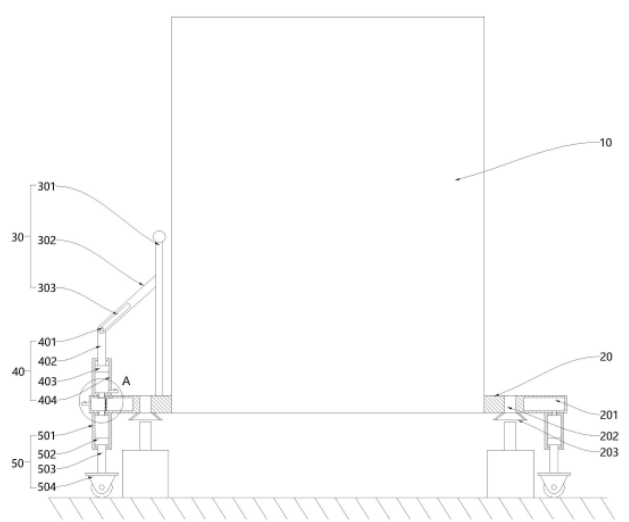

21: 2023/02566. 22: 2023/02/24. 43: 2023/05/16
51: H05K
71: North China University of Science and Technology
72: SHEN, Hong, GAO, Jing, LI, Yue
33: CN 31: 202211690087.0 32: 2022-12-28
54: A RAPID COOLING DEVICE FOR SERVER CABINET
00: -
The invention relates to the technical field of server cabinet, in particular to a rapid cooling device for server cabinet, comprising: a cabinet; A supporting mechanism, which is fixedly connected to the inner side of the cabinet; A cooling mechanism, which is arranged on the outside of the supporting mechanism; wherein, the cooling mechanism further comprises: a control assembly, which is fixedly connected to the inner side of the housing and is connected with the supporting mechanism; An intake assembly, which is connected with the wall on one side of the cabinet and with the control assembly as well; A discharge assembly, which is connected with the wall on the other side of the cabinet and with the control assembly as well; The supporting mechanism and the cooling mechanism are provided to make multiple cooling for electronic equipment and accelerate the speed of intaking and exhausting, greatly improving the cooling efficiency of the device, and the flowed air can cool the cooling device itself to ensure the cooling capacity of the device.

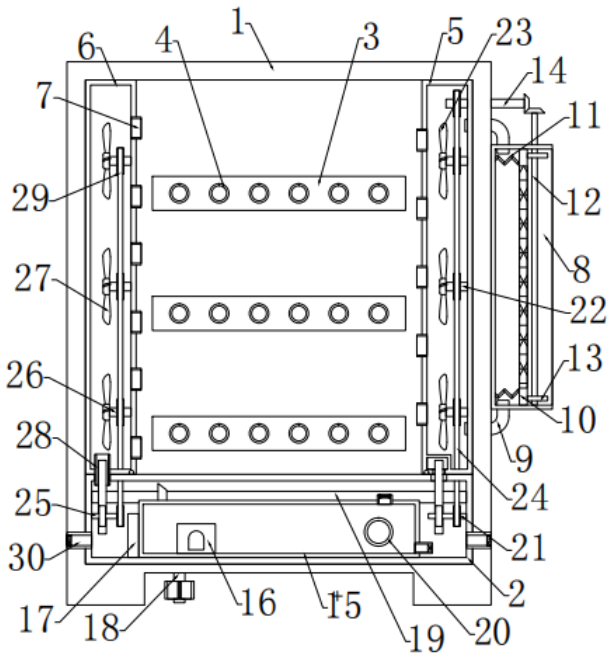

21: 2023/02567. 22: 2023/02/24. 43: 2023/05/16
51: H01M
71: Donghua University
72: TIAN Miao, ZHANG Xinyu, LI Jun, ZHANG Xianghui, SU Yun
54: A FABRIC THERMAL PROTECTION PERFORMANCE EVALUATION DEVICE FOR AIRFLOW UNDER CLOTHES
00: -
The invention relates to a fabric thermal protection performance evaluation device for airflow under clothes, comprising a control system provided thermal source, a cylindrical skin simulator, and a monitoring system for airflow under clothes; The upper end of the cylindrical skin simulator is provided with fabric clamping devices evenly distributed, which are provided with slide rails that are fixed with the cylindrical skin simulator; The surface of the cylindrical skin simulator is embedded with skin simulated sensors, which are electrically connected with a data acquisition and processing system; The surface of the cylindrical skin simulator is provided with a fabric warp direction thermal shrinkage calibration gauge; The monitoring system for airflow under clothes, which is connected with the data acquisition system and is used to monitor the airflow velocity and temperature inside the clothing system of human body. The invention can accurately predict the thermal protection performance of the body in dress under different airflow conditions.

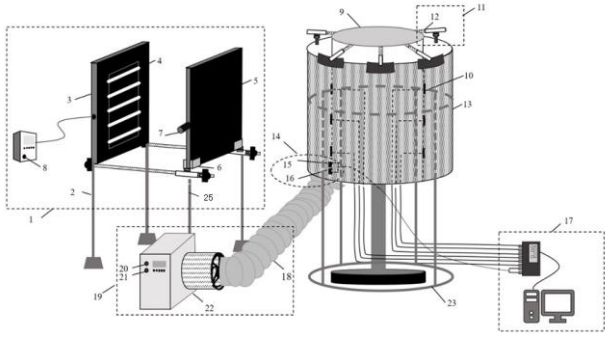

21: 2023/02569. 22: 2023/02/24. 43: 2023/05/09
51: B03B
71: SINOSTEEL MAANSHAN GENERAL INSTITUTE OF MINING RESEARCH CO., LTD., HUAWEI NATIONAL ENGINEERING RESEARCH CENTER OF HIGH EFFICIENT RECYCLE AND UTILIZATION FOR METALLIC MINERAL RESOURCES, ENGINEERING INVESTIGATION & DESIGN INSTITUTE OF SINOSTEEL MIMR CO., LTD.
72: CHEN, Zhou, YANG, Renxin, TIAN, Yian, YUAN, Qidong, WANG, Yaqin, LIU, Jun, WANG, Ju, ZHANG, Yong, LI, Liang, LIN, Xiaofeng, GE, Xinfeng
33: CN 31: 202111198465.9 32: 2021-10-14
54: BENEFICIATION METHOD OF CASCADE RECOVERY AND STAGED TAILINGS DISCARDING OF LOW-GRADE CHROMITE
00: -
The present invention discloses a beneficiation method of cascade recovery and staged tailings discarding of low-grade chromite, develops a process flow sequentially including high-pressure roll grinding, coarse grain wet high-intensity magnetic pre-separation, grinding, wet high-intensity magnetic tailings discarding, coarse and fine classification of high-intensity magnetic concentrates, spiral chute concentrates extracting and middlings shaker recleaning, and adopts a high-pressure grinding roller as an ultra-fine crushing device, which has the characteristics of high crushing ratio, low energy consumption, high fine fraction content of products, etc.; and due to the relatively large grain size, pre-separation tailings can be sold as building materials and products. The present invention adopts the pre-separation flow of wet high-intensity magnetic roughing and scavenging, with fine processing granularity, strong adaptability, high tailings discarding yield and low metal loss rate. By using the present invention to treat low-grade chromite with a Cr_2O_3 grade of 19.44%, chromium

concentrates with a Cr2O3 grade of 43.87% and a Cr2O3 recovery rate of 67.28% can be obtained, which has the advantages of large system processing capacity, high coarse tailings discarding yield, strong adaptability, energy conservation and environmental protection.

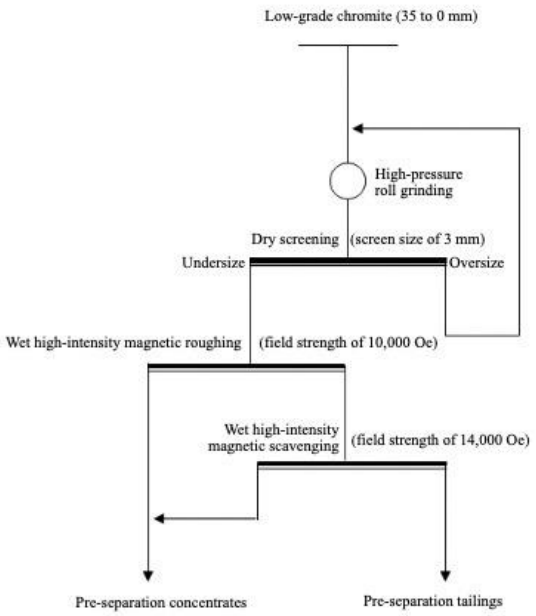

21: 2023/02570. 22: 2023/02/24. 43: 2023/05/09
51: E21C
71: SINOSTEEL MAANSHAN GENERAL INSTITUTE OF MINING RESEARCH CO., LTD., HUAWEI NATIONAL ENGINEERING RESEARCH CENTER OF HIGH EFFICIENT RECYCLE AND UTILIZATION FOR METALLIC MINERAL RESOURCES
72: LI, Xiaogang, ZHAO, Yuntao, YU, Liuping, HAO, Xueran, WEI, Bingbing, XU, Cuiyun, TANG, Zhi
33: CN 31: 202210100024.9 32: 2022-01-27
54: COMBINED MINING METHOD FOR UNDERGROUND MINES
00: -
The invention discloses a combined mining method for underground mines, including constructing a hanging wall along-vein drift (10) in a hanging wall of an orebody, constructing a footwall along-vein drift (1) in a footwall of the orebody, constructing a hanging wall through-vein drift (11) in the hanging wall of the orebody, and constructing a footwall through-vein drift (2) in the footwall of the orebody; constructing a ventilating pedestrian raise and a sublevel drilling drift (13) in the hanging wall of the orebody, constructing a medium-deep hole in the hanging wall of the orebody, and transporting blasted ore out of a stope through a sublevel open stoping mining room extracted ore drift of the sublevel open stoping mining room; when the sublevel open stoping mining room is stoped and filled, a stage open stoping mining room located in the footwall of the orebody is mined, including: constructing a downward deep hole (6) downward in a drilling chamber (4), and transporting blasted ore out of the stope through a stage open stoping mining room extracted ore drift (5). The method of the invention has the advantages of good safety, easy implementation, a high resource recovery rate and so on, and is particularly suitable for popularization and application in underground mines with thick, large and steeply pitching orebodies with very broken surrounding rock.

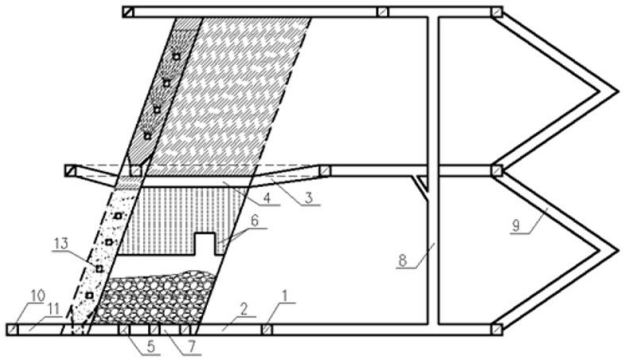

21: 2023/02571. 22: 2023/02/24. 43: 2023/05/09
51: E21F; F42D
71: SINOSTEEL MAANSHAN GENERAL INSTITUTE OF MINING RESEARCH CO., LTD., HUAWEI NATIONAL ENGINEERING RESEARCH CENTER OF HIGH EFFICIENT RECYCLE AND UTILIZATION FOR METALLIC MINERAL RESOURCES, SINOSTEEL NANJING HUAXIN TECHNOLOGY CO., LTD.
72: HU, Yongquan, LIU, Peizheng, ZHANG, Xian, GUO, Wei, WANG, Jin, HONG, Dunmin, SHAO, Shucheng, WANG, Xing
33: CN 31: 202210394551.5 32: 2022-04-14
54: METHOD FOR CAVING TREATMENT AND ELIMINATION OF LARGE GOAF IN UNDERGROUND MINES
00: -
The present invention discloses a method for caving treatment and elimination of a large goaf in underground mines. 2 to 6 working zones or blasting zones are divided in a goaf surrounding rock (3)

around a goaf (1). 3 to 6 deep-hole rock drilling chambers (9) are arranged in the goaf surrounding rock (3) in each of the working zones or blasting zones. The deep-hole rock drilling chambers (9) of each layer are connected by chamber connecting shafts (10). Sinking and driving engineering, namely a connecting drift (6), a connecting inclined shaft (7) or a connecting raise, is arranged between existing engineering and the deep-hole rock drilling chambers (9). Caving horizontal deep holes (12) are arranged in the deep-hole rock drilling chambers (9) in the middle and lower layers, and horizontal and upward sectorial cutting weakening deep holes (13) are arranged in the deep-hole rock drilling chambers (9) in the upper layer. The present invention reduces the underground engineering quantity, the explosive quantity of deep-hole blasting and the harm caused by air shock wave due to large-area falling occurring at the goaf, reduces the construction cost, and eliminates the potential safety hazard in the large goaf.

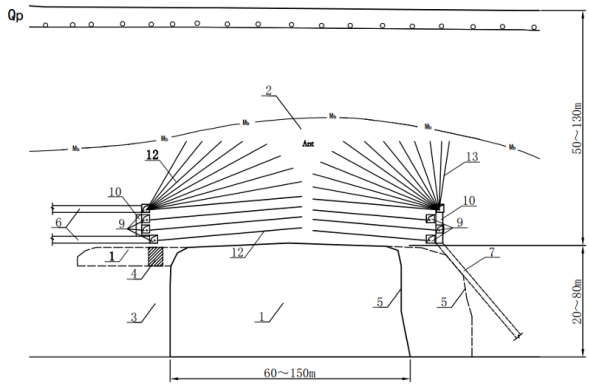

21: 2023/02572. 22: 2023/02/24. 43: 2023/05/09
51: B01D; F42D
71: SINOSTEEL MAANSHAN GENERAL INSTITUTE OF MINING RESEARCH CO., LTD., MAANSHAN MINING INSTITUTE OF BLASTING ENGINEERING CO., LTD., HUAWEI NATIONAL ENGINEERING RESEARCH CENTER OF HIGH EFFICIENT RECYCLE AND UTILIZATION FOR METALLIC MINERAL RESOURCES
72: WANG, Yu, YI, Haibao, LI, Longfu, JIANG, Dongping, LI, Ming, PAN, Zuying
33: CN 31: 202110842891.5 32: 2021-07-26
54: METHOD FOR DUST SUPPRESSION BY ADVANCED WALL PROTECTION IN UNDERGROUND TUNNELING BLASTING
00: -

The present invention discloses a method for dust suppression by advanced wall protection in underground tunneling blasting. An energy cumulation pipe (2) is installed in an advanced wall protection hole (1), an emulsion explosive (3) and a dust settling pocket (4) are evenly spaced at a bottom of the energy cumulation pipe (2) in an axis direction, a nonel detonator (5) and a water-resistant detonating cord (6) pass through an inner bottom of the energy cumulation pipe (2) and are inserted into the emulsion explosive (3) at the bottom, so as to form a structure of "explosive (3) - dust settling pocket (4) - explosive (3)" spaced charging arrangement in an axis direction; and the advanced wall protection hole (1), cutting holes and auxiliary holes are detonated in sequence. The present invention effectively controls roadway blasting shaping, reduces the damage of blasting to surrounding rock masses of roadways, reduces the production of blasting dust, decreases the ventilation time and power consumption of underground mine blasting, reduces the use of explosives, has significant economic and environmental benefits, and can be widely used in opencast and underground mining of black, non-ferrous, gold and other mines.

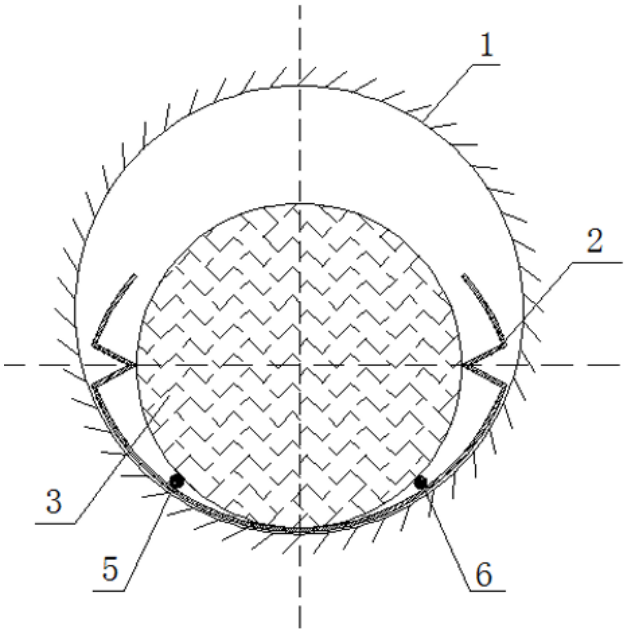

21: 2023/02580. 22: 2023/02/27. 43: 2023/05/10
51: G01N
71: Jiangsu Environmental Monitoring Center
72: XIA, Wenwen, CAO, Jun

54: PORTABLE WATER SAMPLE COLLECTION DEVICE

00: -

Disclosed is a portable water sample collection device. The device includes a hand-held rod, a sampling pole and sampling tubes. The bottom of the hand-held rod is provided with a vertically arranged sampling pole, and the sampling pole is lowered into the water body to be sampled, so that water samples are collected through the sampling tubes. Before sampling, the sampling tubes are mounted to the corresponding position on the sampling pole, the sampling pole is then lowered into the water body by holding the hand-held rod, the solenoid valve is opened through the sampling button, the water body then enters the sampling tubes arranged at the corresponding depths, the solenoid valve is closed after completion of the sampling, the entire sampling pole is then taken out, and all the sampling tubes are removed from the sampling pole for unified collection and transportation.

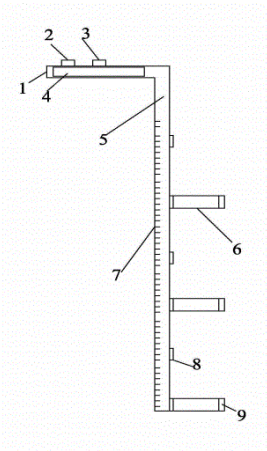

21: 2023/02581. 22: 2023/02/27. 43: 2023/05/02
51: E04B
71: Zhengzhou University of Aeronautics, Henan Yisen Architectural Group of Science and Technology
72: ZHANG Daying, YANG Qinghe, ZHANG Shuaifeng, YE Yifan, WANG Shuming

54: ENERGY DISSIPATION AND SHOCK ABSORPTION DEVICE BETWEEN COLUMNS FOR SILOS

00: -

An energy dissipation and shock absorption device between columns for silos, including a plurality of support columns uniformly and vertically arranged along a circumferential direction of silos, and adjacent support columns are all connected through shock-absorption connecting components; at least one circle of shock-absorption connecting components is arranged along vertical intervals of the support columns, wherein the shock-absorption connecting components includes a middle steel box body and end buffer components symmetrically and fixedly arranged at two ends of the middle steel box body; the end buffer components have a same structure, including an end steel box body, an embedded plate, an overhanging plate, an elastic damping device and a movable hollow box. The invention provides an energy dissipation and shock absorption connection structure between columns. This structure does not change the original structural form and normal use of a silo with column support, but transfers the energy of each supporting column in the earthquake, and transfers and consumes the earthquake energy by relying on collision and friction energy consumption, to finally achieve the objective of improving the seismic performance of the silo with column support and solve the technical problem of energy consumption and shock absorption of supporting columns.

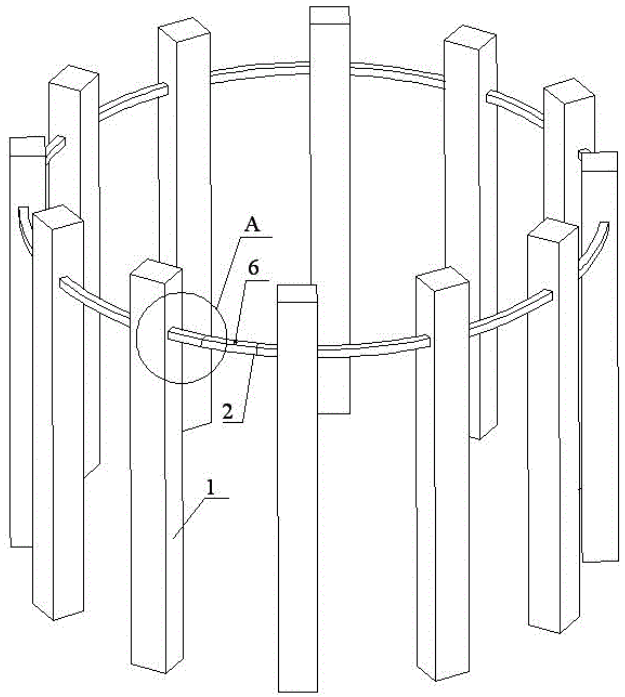

21: 2023/02582. 22: 2023/02/27. 43: 2023/05/02
51: D01B; D01C
71: Anhui Polytechnic University

72: LI Wei, YAN Hongqin, DING Xiaocui, ZHANG Yue, WU Yujie

54: METHOD FOR EXTRACTING BAMBOO FIBER

00: -

The invention discloses an extraction method of bamboo fiber, belonging to the technical field of bamboo fiber treatment. The invention prepares a soft and skin-friendly bamboo fiber through pretreatment, high-temperature cooking, fermentation softening of Lactobacillus plantarum subspecies, pectinase hydrolysis, pickling and washing, soaking and softening of potassium permanganate, soaking and covering with sodium sulfite solution and other processes. The preparation method of the invention is simple, and the preparation cost is low; and the prepared bamboo fiber is soft and wear-resistant, good in stability and toughness, easy for industrial production, strong in practicability and broad in market prospect.

21: 2023/02583. 22: 2023/02/27. 43: 2023/05/02

51: C12N; C12Q

71: SHANDONG AGRICULTURAL UNIVERSITY

72: DENG Zhiying, WANG Guanying, LI Wenshu, TIAN Jichun

54: MAJOR QTL LOCUS QFPC-1B FOR CONTROLLING PROTEIN CONTENT IN WHEAT FLOUR AND ITS MOLECULAR MARKER APPLICATION

00: -

The invention proposes to construct a high-density genetic map by using SLAF-Seq technology to locate the QTL of flour protein, identify a stable major QTL locus Qfpc-1B on chromosome 1B, and explore its molecular marker and application. Based on the phenotypic data of protein content in flour, QTL mapping analysis is carried out in three environments. Combined with the results of QTL mapping, a major and closely linked QTL locus Qfpc-1B for controlling the protein content of flour is identified through excellent allele identification and phenotypic analysis of the loci; the Qfpc-1B is located on chromosome 1B and has five closely linked SNP markers. Major loci and their linked molecular markers provide a theoretical basis for the discovery of genes controlling protein content in wheat flour and the molecular improvement of high protein wheat quality breeding.

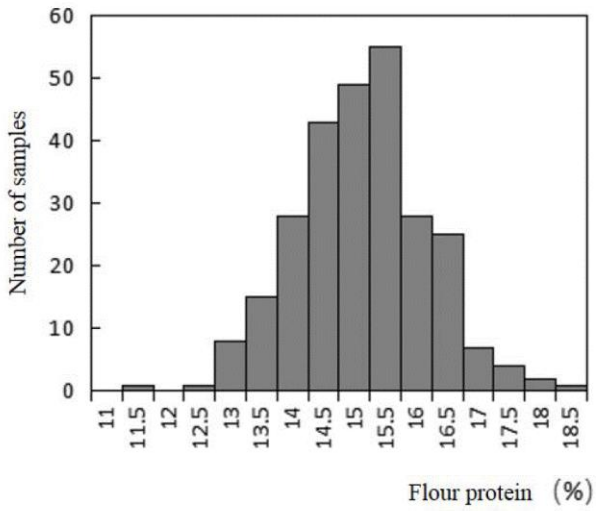

21: 2023/02584. 22: 2023/02/27. 43: 2023/05/02

51: G06F; G06N

71: ShanDong JiaoTong University

72: LIU Yuchen, ZHAO Lingyan, LIU Zheng, WANG Fayong, TANG Youan

54: ROBOT SERVO CONTROL FAULT DETECTION SYSTEM BASED ON DIGITAL TWIN

00: -

The invention discloses a robot servo control fault detection system based on digital twin, which comprises: a parameter collection module, used to obtain the operation parameter data based on the historical operation data and standard parameter data of the robot servo system; a model building module, is connected with the parameter collection module, which is used to build the overall framework of the servo system based on the operation parameter data, and build the twin model of the servo system based on the overall framework of the system; a model calculation module connected with the model building module is used to build a dynamic environment area, and the servo system twin model is placed in the dynamic environment area for iterative calculation to obtain a fault detection model; a fault detection module is connected with the model calculation module to obtain real-time operation data, input the real-time operation data into the fault detection model for detection, and generate detection results. The invention constructs a dynamic environment area, and leads the servo system twin model into the dynamic environment area for simulation, which can timely troubleshoot, facilitate the maintenance

personnel to carry out timely maintenance, and reduce the maintenance time and cost.

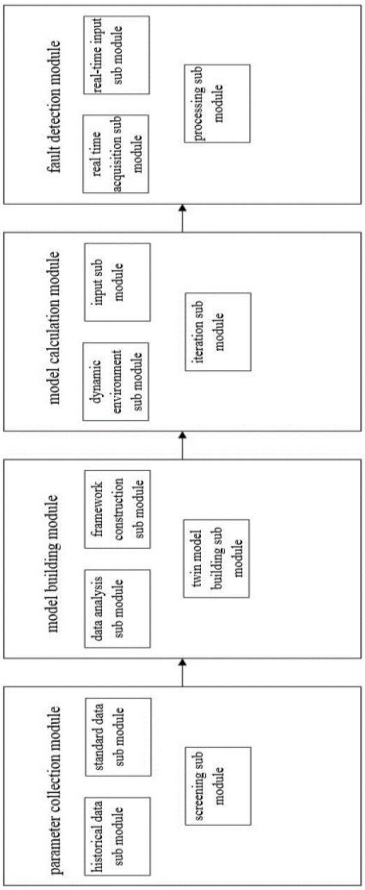

21: 2023/02585. 22: 2023/02/27. 43: 2023/05/03
51: A01K
71: SHANGHAI UNIVERSITY OF MEDICINE & HEALTH SCIENCES
72: LI Tingting
54: HYPERURICEMIA RENAL INJURY MODEL AND CONSTRUCTION METHOD THEREOF
00: -
The invention relates to a rat hyperuricemia renal injury model and a construction method thereof, which comprises potassium oxonate and yeast; the invention also relates to a method for constructing a rat model of hyperuricemia complicated with renal injury by the mixed feed and its application, which adopts a mixed feed containing potassium oxonate and yeast to feed rats to obtain a rat hyperuricemia renal injury model. The method for constructing the rat model of hyperuricemia complicated with renal injury is closer to the pathogenesis of human gout disease, can simulate the hyperuricemia disease formed in clinic to the greatest extent, is beneficial to studying the pathogenesis of human hyperuricemia disease and designing therapeutic drug targets, and the constructed animal model is convenient to use, and has great research value and medical application prospect.

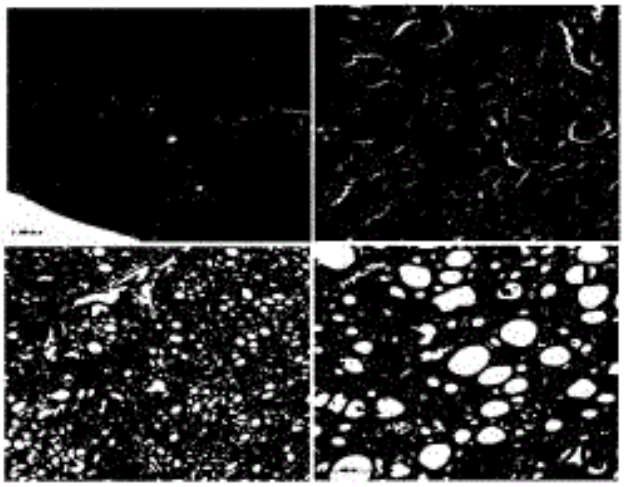

21: 2023/02586. 22: 2023/02/27. 43: 2023/05/03
51: G01N
71: Institute of Mountain Hazards and Environment, Chinese Academy of Sciences, POWERCHINA Huadong Engineering Corporation Limited
72: WU Hao, SHAN Zhigang, LI Gaonian, ZHAO Liuyuan, NI Weida
54: DEVICE AND METHOD FOR TESTING SETTLING VELOCITY OF NON-SPHERICAL PARTICLES IN ENVIRONMENTS WITH VARIOUS VISCOUS FORCE COEFFICIENTS
00: -
The invention provides a device and a method for testing the settling velocity of non-spherical particles in a variety of viscous force coefficient environments, which comprises a thermostat, where a cylindrical liquid storage cylinder is arranged in the thermostat, glucose-sodium chloride solutions with different volume concentrations are prepared in the cylindrical liquid storage cylinder, and the upper part of the cylindrical liquid storage cylinder is provided with an electromagnetic clamping piece device, where the electromagnetic clamping piece device can load non-spherical particles, and the inner wall of the thermostat is provided with a non-contact measuring system. According to the invention, various viscous forces of liquid are simulated by preparing glucose-sodium chloride solutions with different concentrations, and at the same time, test errors

caused by external temperature environment and artificial release factors of particles are solved.

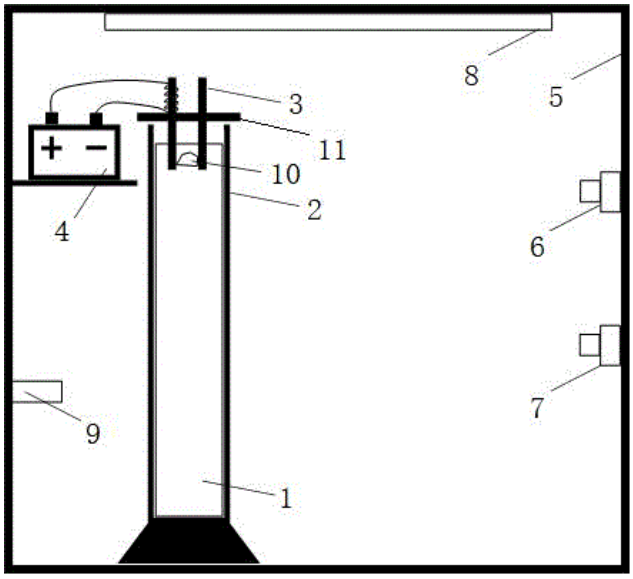

21: 2023/02587. 22: 2023/02/27. 43: 2023/05/03
51: A61M
71: The first affiliated hospital of bengbu medical college
72: DONG Huaifu, DONG Xiaoyu, ZHENG Haiyan, XU Bing, QU Sehua
54: ATOMIZER FOR PEDIATRIC RESPIRATORY TRACT THERAPY
00: -
The invention discloses an atomizer for pediatric respiratory tract therapy, which comprises a medicine storage bottle, where the bottom end of the inner cavity of the medicine storage bottle is communicated with an external air source; the atomizing mechanism is fixedly connected to the bottom end of the inner cavity of the medicine storage bottle, is communicated with an external air source, and is internally provided with a heating assembly; the stirring mechanism is arranged on that out wall of the atomizing mechanism and is rotatably connected with the medicine storage bottle; the stirring mechanism includes a plurality of stirring assemblies, and the stirring assemblies revolve around the atomizing mechanism while rotating; the bottle cap is detachably connected to the top end of the medicine storage bottle, and the bottle cap is provided with an inhalation mask communicated with the inner cavity of the medicine storage bottle. The invention is simple in structure and convenient to use, and can heat the liquid medicine, so as to improve the atomization effect and atomization efficiency, reduce the irritation to the respiratory tract of children, and improve the therapeutic effect on respiratory diseases.

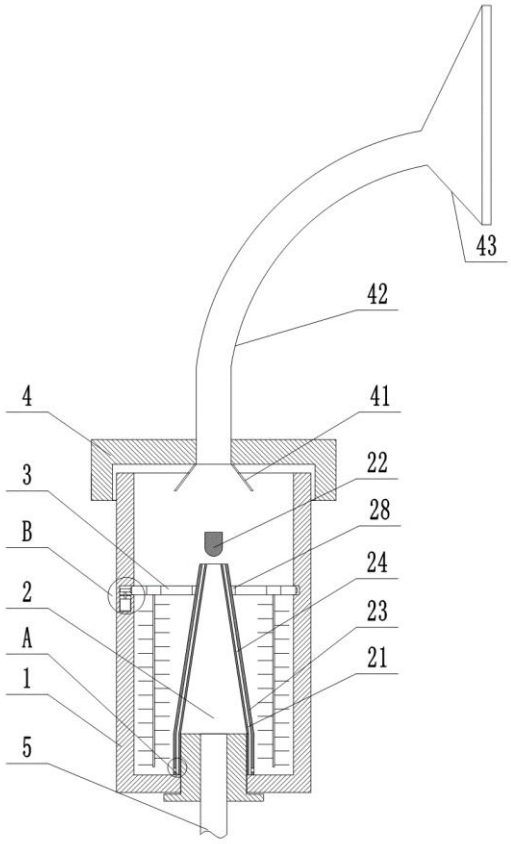

21: 2023/02588. 22: 2023/02/27. 43: 2023/05/02
51: B01J
71: Nanchang Hangkong University
72: XIE Yu, XIAO Rui, ZHANG Xiaoxiao, MOU Xiaowan, LING Yun, ZHANG Jianguo
54: METHOD FOR IMPROVING PHOTOCATALYTIC CO2 REDUCTION PERFORMANCE OF TIO2 BY IN-SITU PHOTODEPOSITION OF CUAU
00: -
The invention provides a method for preparing CuAu TiO2 by in-situ photodeposition, and tests the CO2 reduction performance of the catalyst in pure water and CO2 atmosphere. The results show that the CO2 reduction rate of CuAu TiO2 is much higher than that of pure TiO2, and the catalytic efficiency of 0.7 percent Cu 0.3 percent Au TiO2 is 3.3 times that of pure TiO2. Experiments and theories prove that the deposition of Cu and Au brings excellent photo-

generated carrier separation and transfer ability to the composite catalyst.

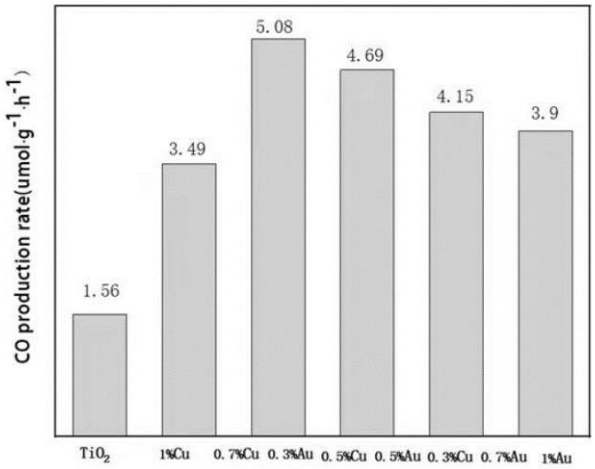

21: 2023/02589. 22: 2023/02/27. 43: 2023/05/03
51: A01G
71: Shandong Institute of Pomology
72: WANG Guiping, XUE Xiaomin, MENG Haifeng, WANG Jinzheng, CHEN Ru

54: APPLE POLLEN SUSPENDING AGENT AND POLLINATION APPLICATION METHOD THEREOF

00: -

The invention relates to the technical field of apple tree pollination, in particular to an apple pollen suspending agent and a pollination application method thereof, consisting of xanthan gum, sucrose, urea, MgSO4·7H2O, CaCl2·2H2O, boric acid, pollen and water. In the process of pollination application, the apple pollen suspension concentrate has the advantages of simple operation, high pollination speed, uniform, concentrated and accurate pollen spraying, saving pollen and labor, and less pollen consumption. If an unmanned aerial vehicle is used, an average acre of land needs 1L of water to calculate, and only about 1-2 g of pollen is needed, thus greatly reducing the pollen consumption, being convenient and quick, and reducing the labor cost. By adopting that apple pollen suspending agent, the fruit set rate of apples can be improved, the quality of apples can be stabilized, and assistance is provided for the sustainable development of the apple industry. The application method of the invention is simple, and is suitable for the realistic needs of aging and labor shortage.

21: 2023/02590. 22: 2023/02/27. 43: 2023/05/03
51: B01D
71: Hainan Tropical Ocean University, Yazhou Bay Innovation Institute of Hainan Tropical Ocean University
72: WAN Wubo, WU Chuntao, Hu Yaqin, Yang Chaojie, Zeng Lingling, HOU Xun, WAN Jinming, ZHONG Shengkui

54: PRETREATMENT DEVICE FOR OIL-WATER SEPARATION AND USE METHOD THEREOF

00: -

The invention discloses a pretreatment device for oil-water separation and a use method thereof. A filter element assembly is arranged in a shell of the device, which comprises a plurality of filter elements, a bracket and a water collector; the filter element comprises a filter element barrel, an upper sealing cover and a lower sealing cover, wherein the filter element barrel sequentially comprises a protective net outer barrel, a hydrophilic and oleophobic filter screen intermediate barrel, a filling layer and an inner barrel from outside to inside; the filling layer is formed by stacking hydrophilic and oleophobic glass fiber filters and oleophilic and hydrophobic glass fiber filters; the inner barrel is provided with several water holes; the lower sealing cover is provided with a liquid outlet; the bracket is fixed on the inner wall of the shell, and a plurality of connectors for fixing the filter element are arranged on the bracket, and the two ends of the connectors are respectively communicated with the liquid outlet of the filter element and the inlet of the water collector; the liquid outlet is communicated with the outlet of the water collector. The device of the invention can not only effectively intercept particles and larger oil droplets in the oil field produced liquid, but also remove emulsified oil in the oil field produced liquid, and at the same time ensure that the filter element is not easy to be polluted and has a long service life.

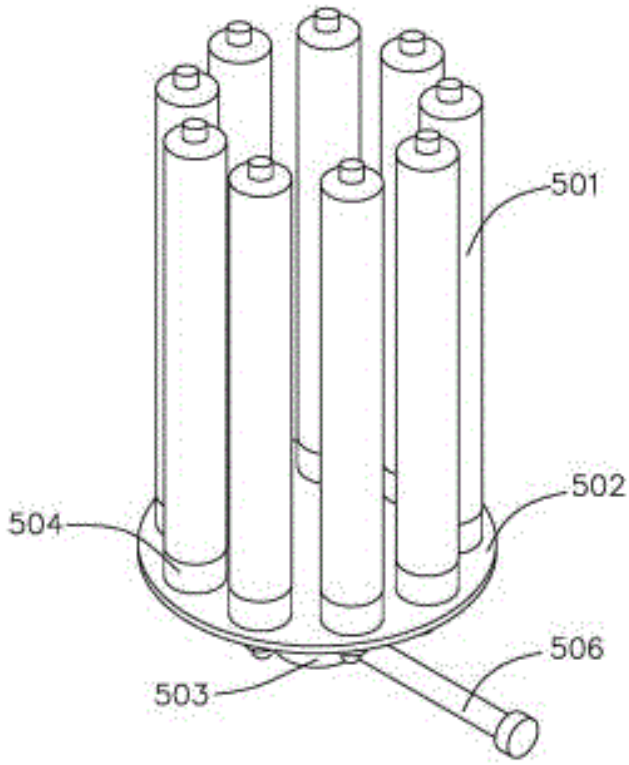

21: 2023/02591. 22: 2023/02/27. 43: 2023/05/03
51: E04B
71: Anhui Water Conservancy Technical College
72: WANG Qiheng, SONG Wenxue, LI Yang, ZHAO Pinbei, QIU Duorong, HE Junjian, WANG Dong
54: NOVEL GREEN ECOLOGICAL ENERGY-SAVING WALL
00: -
The invention relates to that technical field of green energy-saving buildings, in particular to a novel green ecological energy-saving wall, which comprise a structural layer, where one side of the structural layer is fixedly connected with a functional layer, one side of the functional layer far from the structural layer is fixedly connected with an ecological layer, and one side of the ecological layer far from the functional layer is fixedly connected with a protective layer; the ecological layer comprises a plurality of sacks arranged in a matrix, and both sides of the sacks are fixedly connected with the protective layer and the functional layer respectively, and the sacks are filled with soil and plant seeds. The invention achieves the purpose of building greening through the wall structure.

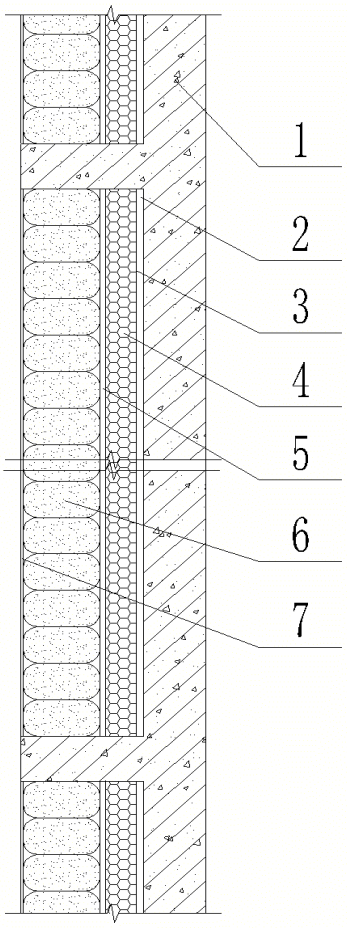

21: 2023/02592. 22: 2023/02/27. 43: 2023/05/03
51: A01K
71: Anhui Academy of Agricultural Sciences Institute of Fisheries
72: JIANG Yelin, CHEN Zhu, Krishna R.Salin, Isagani P. Angeles Jr, Yew-Hu CHIEN, WANG Fen, WANG Ling, JIANG Jingling, Thay Somony, Lumpan Poolsawat, SONG Guangtong, ZHOU Xiang, HOU Guanjun, XU Xiaona, JI Suofei, WANG Jiajia, ZUO Lin, XU Bin, ZHANG Kelai, ZHANG Ye, SU Youfeng, ZHANG Yu, SHAO Lin, LI Hu, LI Zhi, Meng-Chou Lee, Phyo Sandi, Le Viet Dung, Mohaddeseh Mousavi, Muhammad Saleem Chang, LIN Zuokun, CHEN Yongmei
54: AQUAPONICS SYSTEM FOR SPECIAL AQUATIC ANIMALS
00: -
The invention provides an aquaponics system for special aquatic animals, including: fish, turtle, turtle, shrimp and crab and other special aquatic animal breeding modules, which are arranged at the bottom of the breeding shed; the vegetable cultivation module is arranged on the upper side of the special

aquatic animal cultivation module; the water circulating purification module is connected between the input end of the vegetable cultivation module and the output end of the special aquatic animal cultivation module; the temperature control module comprises a temperature control box; the growth detection module is connected with the vegetable cultivation module in. According to the invention, the adjusting sealing devices are arranged in the first connecting pipe and the gas transmission pipe, so that the gas flow can be uniformly discharged through the exhaust holes, the whole planting environment can be quickly filled with the gas flow, the temperature of the planting environment can be quickly adjusted, and the contact area with liquid can be increased by arranging a plurality of conducting pipes and a plurality of conducting components, so that the conduction efficiency can be improved, and the water temperature can be quickly adjusted.

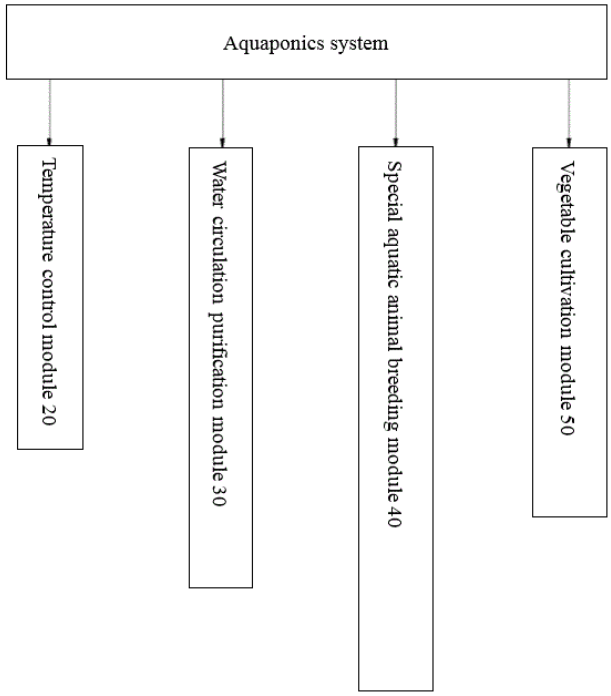

21: 2023/02593. 22: 2023/02/27. 43: 2023/05/16
51: H01L
71: Rudra Sankar Dhar, Swagat Nanda, Rasmita Barik, Potaraju Yugender, Kuleen Kumar
72: Rudra Sankar Dhar, Swagat Nanda, Rasmita Barik, Potaraju Yugender, Kuleen Kumar

54: A NANO-DEVICE USING ULTRA-THIN TRI-LAYERED STRAINED-CHANNEL FOR ENHANCING DRIVE CURRENTS IN TRI–GATE FIN-FET ARCHITECTURE

00: -

A Nano-Device Using Ultra-Thin Tri-Layered Strained-Channel for Enhanced Drive Currents in Tri–Gate Fin-FET, wherein the device comprises of: a Nano Fin-FET device fabricated on top of a buried oxide (BOX) and silicon (Si) substrate layer, wherein the nano Fin-FET device comprises of: a channel region (3) forming the tri-layer strained hetero-channel regions, wherein the channel region comprises of: a top layer (3a) and a bottom layer (3c) formed from strained silicon (s-Si); and a middle layer (3b) sandwiched in between the top layer (3a) and the bottom layer (3c) formed from strained silicon germanium (s-Si-Ge); and at least a pair of n-doped silicon regions forming a conductive layer grown on both sides of the channel region forming a source (1a) and a drain (1b).

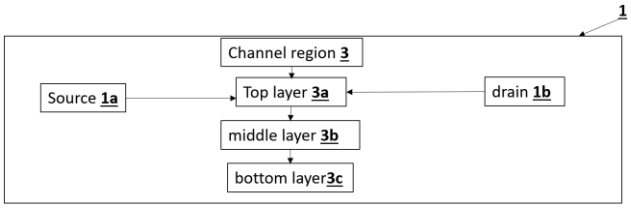

21: 2023/02595. 22: 2023/02/27. 43: 2023/05/16
51: A61K
71: Dr. R. Rajagopalan, Dr. Sanjay K. Jain, Dr. Piyush Trivedi, Dr. Farhad F Mehta, Dr. Ankita Tiwari
72: Dr. R. Rajagopalan, Dr. Sanjay K. Jain, Dr. Piyush Trivedi, Dr. Farhad F Mehta, Dr. Ankita Tiwari

54: A GALLIC ACID–STEARYLAMINE CONJUGATE COMPOSITION AND ITS PREPARATION PROCESS THEREOF

00: -

The present invention generally relates to a process for preparing gallic acid–stearylamine conjugate comprises mixing 25-35 mL of Tris-(2,2,2-trifluoroethyl) borate (B(OCH2CF3)3 with 10-20 mL gallic acid (GA); preparing 20-30 mL of stearylamine (SA) in 1-3 mL acetonitrile; stirring the rection mixture at 80 °C in a properly sealed carousel tube for 5 h; diluting the mixture with 2-4mL Dichloromethane (CH2Cl2) and 0-1 mL water; adding 100-200mg of Amberlyst 15, Amberlyst A-26(OH), Amberlite IRA743 to the mixture and stirring for 30 mins; adding MgSO4 and filtering the mixture to obtain the solids; and separating the solids from

CH2Cl2 three times through concentration in vacuo for producing the amide product.

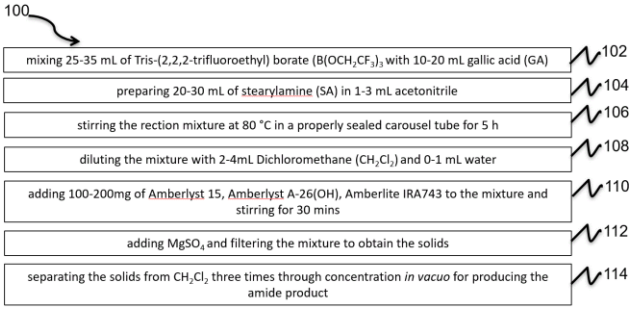

21: 2023/02597. 22: 2023/02/27. 43: 2023/05/16
51: H01L
71: Rudra Sankar Dhar, Kuleen Kumar, Potaraju Yugender, Rasmita Barik, Swagat Nanda
72: Rudra Sankar Dhar, Kuleen Kumar, Potaraju Yugender, Rasmita Barik, Swagat Nanda

54: AN UNDERLAP INDUCED NANO SYSTEM WITH STRAINED-SI CHANNEL BASED DOUBLE GATE NANO-FIELD EFFECT TRANSISTOR (DG-FET)

00: -

An Underlap Induced Nano system (1) with Strained-Si Channel Based Double Gate Nano-field Effect Transistor (DG-FET), wherein the system (1) comprises of: a nano dimensional heterostructure on Insulator (HOI) Double-Gate Nano-Field-Effect-Transistor (DG Nano-FET) with a multiple layered dielectric based capacitive system, wherein the multiple layered dielectric system comprises of: a tri-layered semi-conductor assembly comprising of: an upper silicon layer (3a) made up of strained silicon (s-Si); a middle layer (3b) beneath the upper silicon layer (3a) made up of strained silicon germanium (s-Si-Ge); and

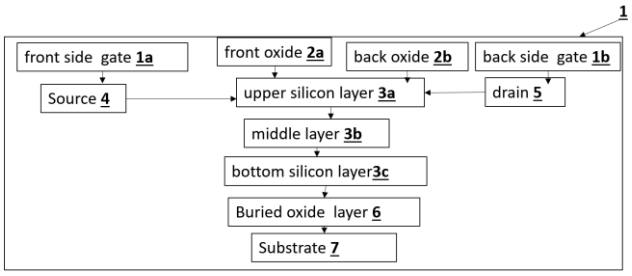

21: 2023/02598. 22: 2023/02/27. 43: 2023/05/16
51: G06F
71: Indian Institute of Information Technology - Allahabad, Prayagraj, Dr. Anurika Vaish, Sarthak Sengupta, Soumyadeep Basu
72: Dr. Anurika Vaish, Sarthak Sengupta, Soumyadeep Basu

54: A METHOD AND SYSTEM FOR PERFORMING SENTIMENT ANALYSIS ON TWEETS FROM GENUINE TWITTER ACCOUNTS

00: -

The present disclosure relates to a method and system for performing sentiment analysis on tweets from genuine twitter accounts. The invention involves a combination of algorithms based on natural language processing to process the data collected from genuine Twitter accounts and exclude data from bot accounts. The data is analyzed to determine the overall sentiment of the tweets, based on their use of keywords and other indicators. The invention includes a detailed method for collecting, cleaning, and analyzing the data. The invention's primary objective is to provide a reliable and accurate method for sentiment analysis on Twitter that is useful for detecting trends, identifying fake news, and detecting cyberbullying and targeted phishing attacks.

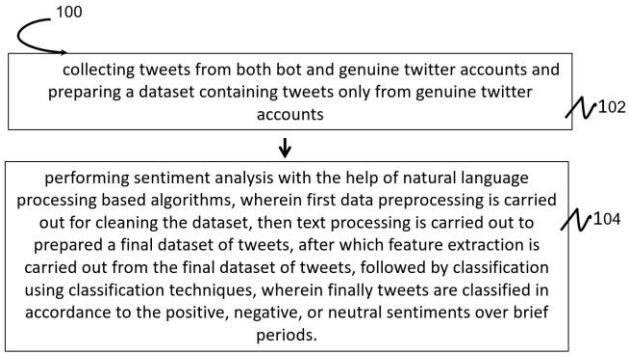

21: 2023/02599. 22: 2023/02/27. 43: 2023/05/16
51: G06N
71: Dr. Ravinder Singh Kuntal, Dr. Radha Gupta, Dr. Pramod Naik, Dr. Deepika T, Dr. Mahalakshmi P, Dr. Mir Aadil
72: Dr. Ravinder Singh Kuntal, Dr. Radha Gupta, Dr. Pramod Naik, Dr. Deepika T, Dr. Mahalakshmi P, Dr. Mir Aadil

54: A REAL CODED GENETIC ALGORITHM BASED SYSTEM FOR FEED FORMULATION

00: -

The present disclosure relates to a real coded genetic algorithm based system for feed formulation. In the present disclosure, a real coded genetic algorithm is developed that is implemented on the developed three linear programming models which are further solved by employing tools and technique

namely simple LP method, GRG non-linear technique, and evolutionary algorithm. The aim of the present disclosure is to formulate a least cost ration for pregnant dairy cows by employing the developed linear programming models. Furthermore, one of the primary aim of the present disclosure is to address some of the constraints of linear programming model by employing a goal programming model which divides each objective into set of priorities for all three kinds of animals namely, seven, eight, and nine months pregnant dairy cows.

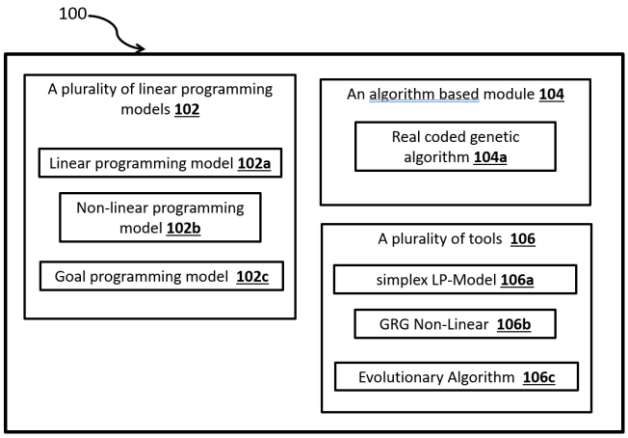

21: 2023/02602. 22: 2023/02/27. 43: 2023/05/16
51: A61K
71: Dr. (Prof.) Ravi Kumar Dhawan, Mr. Nishant Kumar, Mr. Ashwani Dhawan
72: Dr. (Prof.) Ravi Kumar Dhawan, Mr. Nishant Kumar, Mr. Ashwani Dhawan

54: A SYSTEM FOR EVALUATING SYNERGISTIC ANTI-CANCER EFFECTS OF 5-FUOROURACIL AND GALLIC ACID-STEARYLAMINE CONJUGATE

00: -

The present invention generally relates to a system to evaluate synergistic anti-cancer effects of 5-fuorouracil and synthesized gallic acid-stearylamine conjugate in A431 human squamous cancer cell line comprises a chemical synthesis chamber (102) for synthesizing gallic acid-stearylamine (GA-SA) conjugate in A431 human squamous cancer cell line; a characterization processor (104) for characterizing the synthesized conjugate using Fourier transform infrared spectroscopy (FT-IR), nuclear magnetic resonance (NMR), and mass spectrometry (MS); and an analysis processor (106) for assessing the synergistic effect of the combination therapy (5-FU/GA-SA) by determining their inhibitory concentration (IC30), whereby A431 cells are treated with 5-FU:GA–SA conjugate at various ratios ranging from 5:1 to 1:5.

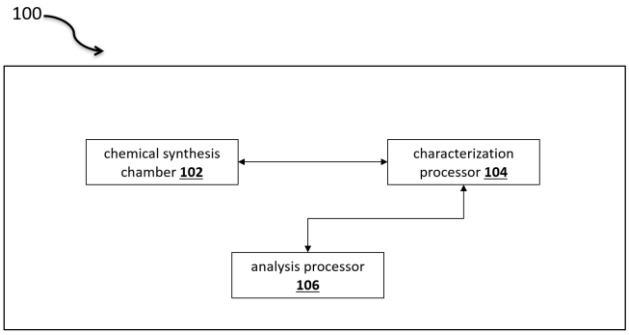

21: 2023/02603. 22: 2023/02/27. 43: 2023/05/16
51: A61K
71: Dr. Ishab Kumar, Mr. Pradeep Kumar Choda, Dr. Meenakshi Ratra, Professor Piyush Trivedi, Dr. Gampa Vijay Kumar, Dr. Farhad F Mehta, Dr. R. Rajagopalan, Mr. Kulwinder Singh
72: Dr. Farhad F Mehta, Dr. R. Rajagopalan, Professor Piyush Trivedi, Dr. Gampa Vijay Kumar, Dr. Ishab Kumar, Mr. Pradeep Kumar Choda, Dr. Meenakshi Ratra, Mr. Kulwinder Singh

54: A SYSTEM AND A METHOD FOR PREPARING A FORMULATION AND CHARACTERIZING BIODEGRADABLE MEDICATED CHEWING GUM

00: -

A system (100) and a method (200) for preparing a formulation of biodegradable medicated chewing gum, comprises of: a blade mixer (102) for preparing a formulation of corn zein chewing gum, wherein 70 % v/v of an aqueous-ethanol solution prepared from a 50%w/w zein powder, 2%w/w of distilled monoglyceride, plasticizer, 5% w/w of photoactive titanium dioxide, polysorbate-60, and 8%w/w of hydrogenated palm oil is added to the blade mixer to prepare a corn zein solution; a container (104) for precipitating zein from an ethanol solution forming gum base by pouring the prepared corn zein solution in 4-6 liters of purified ice water; and a heating chamber (108) for heating coating mixture comprising a sweetener blend and a glycerin at a defined interval at a defined temperature, wherein the gum pieces are dipped in the coating mixture solution for 1 minute to allow the liquid to spread evenly.

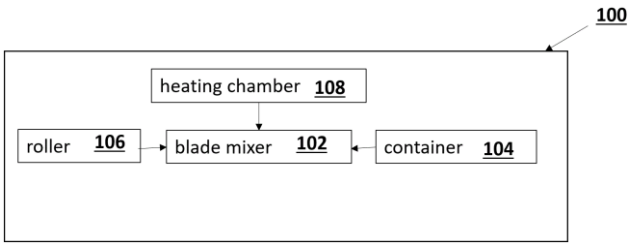

21: 2023/02604. 22: 2023/02/27. 43: 2023/05/12
51: G06T
71: Hangzhou Apogee Tech Co., Ltd.
72: Ming Ge, Jingxue Shen, Jiang Wei, Hui Li, Ming Li

54: MACHINE VISION-BASED COILED MATERIAL OFF-LINE AUTOMATIC PARKING REWINDING METHOD

00: -

The invention provides a machine vision-based coiled material off-line automatic parking rewinding method, which comprises the following steps that: a rewinding control computer is used for receiving flaw data of a visual detection system on a target coiled material, and during rewinding operation, the rewinding control computer is used for sending position data of flaws closest to a stand in the longitudinal direction to a first PLC (Programmable Logic Controller) one by one; the first PLC sends a speed reduction signal to the rewinding machine PLC in advance corresponding to the longitudinal position data of the current flaw, and then sends a stop signal, so that the rewinding machine PLC controls the rewinding machine to stop under the condition that the speed is reduced aiming at the flaw which is about to arrive at the stand, and the flaw is stopped at the detection position on the stand. The rewinding efficiency and accuracy are improved, and meanwhile the working intensity of operators is reduced.

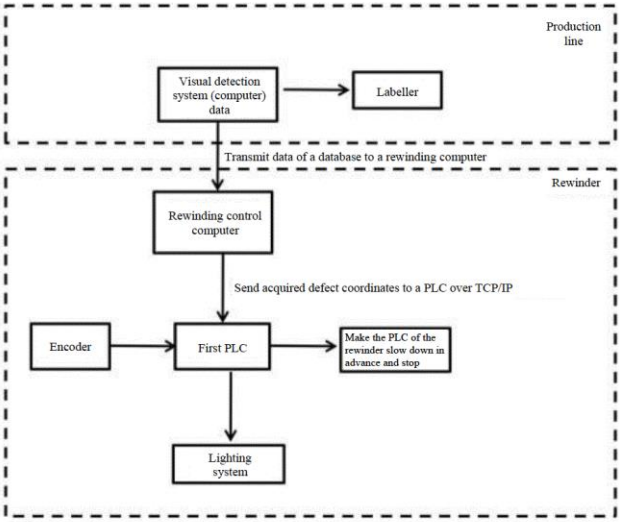

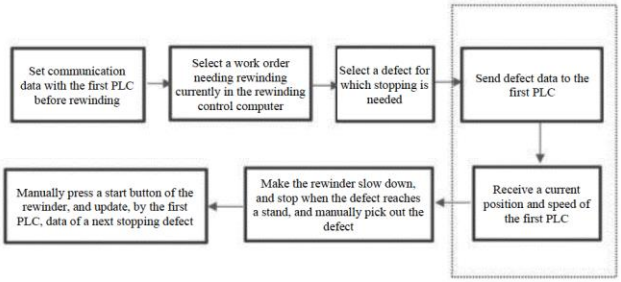

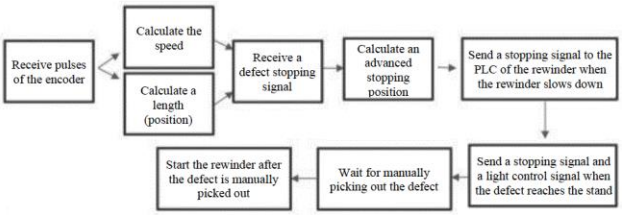

21: 2023/02605. 22: 2023/02/27. 43: 2023/05/03
51: C05F
71: NINGBO UNIVERSITY
72: ZHOU Xiong

54: ORGANIC FERTILIZER WITH MARINE BIOLOGICAL POLYPEPTIDE CHELATING METAL ELEMENTS AND PREPARATION METHOD THEREOF

00: -

The invention provides an organic fertilizer with marine biological polypeptide chelating metal elements and a preparation method thereof, comprising preparing enzymolysis polypeptide liquid and chelating with metal elements: adding the homogenate of marine animal aquatic products into the enzymolysis tank, adding deionized water, preheating to the set temperature, adjusting the pH value, adding protease, fully stirring, maintaining the

constant temperature for a certain time, heating up to inactivate the enzyme after enzymolysis, cooling to room temperature and filtering out, and centrifuging the filtrate to obtain the supernatant, which is the polypeptide liquid of marine biological origin; ultrafiltering under a certain pressure to obtain a polypeptide filtrate with a small molecular weight, adding it into a chelating tank with magnesium sulfate in a certain mass ratio, adjusting the pH value, setting the heating temperature, stirring at a constant speed, cooling to room temperature after chelating, concentrating to a certain volume, adding ethanol under stirring, standing, filtering, washing the solid with ethanol, and vacuum freeze-drying to obtain the powder, that is, the organic fertilizer for chelating metal elements of marine biological polypeptide.

21: 2023/02606. 22: 2023/02/27. 43: 2023/05/03
51: A47L
71: Anhui Polytechnic University
72: ZHENG Yanchang, QIAN Liyong, ZHAO Min, WANG Kang

54: AUTOMATIC TABLEWARE SORTING DEVICE AND SORTING METHOD

00: -

The invention discloses an automatic tableware sorting device and a sorting method, belonging to the technical field of tableware sorting. In the automatic tableware sorting device, the feeding end of a secondary sorting mechanism is connected with a sorting and carding frame, the bottom of the secondary sorting mechanism and the sorting and carding frame are connected with a rotary sorting device I through a transmission and transformation mechanism, and the discharging end of the secondary sorting mechanism is connected with a rotary sorting device II through a transmission and transformation mechanism. Cameras are respectively arranged above the rotary sorting device I and the rotary sorting device II, and the cameras are connected with the PLC control unit through the upper computer, and the PLC control unit is electrically connected with the transmission and transformation mechanism to realize the throwing or cyclic transportation of tableware. The invention sorts the stacked tableware after preliminary sorting and carding, thus reducing the situation of tableware stacking, conveying the chopsticks spoon and the dishes in different directions after sorting, and automatically sorting the chopsticks spoon and the dishes after rotating and combing, thus improving the sorting efficiency and accuracy and reducing the sorting cost.

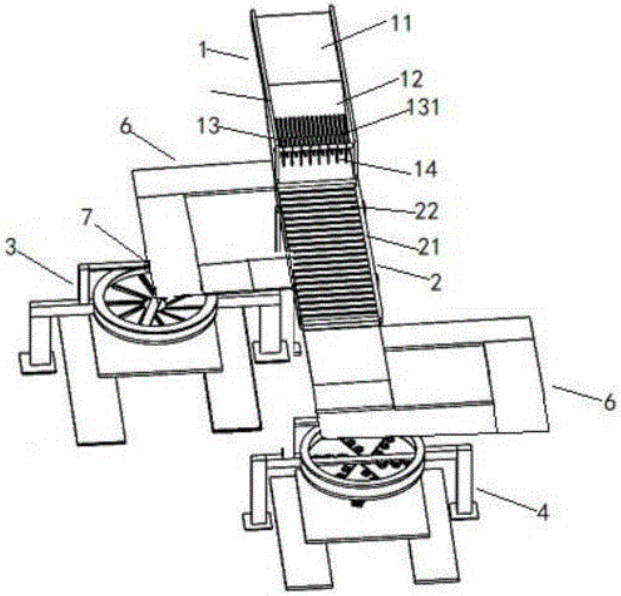

21: 2023/02607. 22: 2023/02/27. 43: 2023/05/03
51: G01F
71: Anhui Polytechnic University
72: ZHENG Yanchang, LI Ying, WANG Yinfeng, WU Guo

54: DEVICE AND METHOD FOR MEASURING AIR VOLUME

00: -

The invention discloses an air volume measuring device, which is provided with a measuring base and an air hood connected by a hood body connecting seat, wherein the air hood faces the air outlet of the air volume to be measured; a concentric bracket is arranged in the measuring base; the concentric bracket consists of a vertically arranged central connecting pipe and a plurality of circles of ventilation pipes wound on the central connecting pipe; each ventilation pipe is provided with air holes; one end of the ventilation pipe is sealed; the other end is connected with one end of a pipeline in the central connecting pipe; and the other end of the pipeline is connected with a measuring unit outside the measuring base. According to the invention, the corrugated pipe with memory function is designed as the hood body connecting seat, so that the length of the connecting seat and the relative angle with the

hood body can be adjusted, and the included angle between the hood body and the base and the wind direction can be changed; meanwhile, the flow field state of the base and the connecting seat section can be optimized by adjusting the length of the connecting seat, and the measurement accuracy of the average wind speed can be improved.

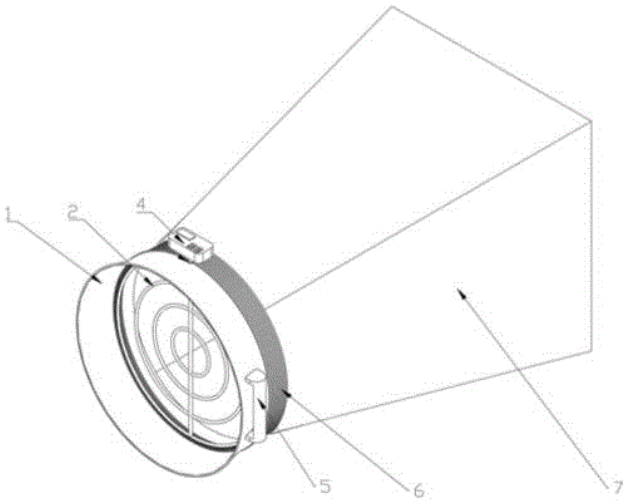

21: 2023/02609. 22: 2023/02/27. 43: 2023/05/03
51: A01G
71: Institute of Horticulture, Sichuan Academy of Agricultural Sciences
72: LIU Jia, ZHANG Guowei, XIAN Xiaolin
54: CULTIVATION METHOD FOR IMPROVING YIELD AND QUALITY OF PLUM TREES
00: -
The invention discloses a cultivation method for improving yield and quality of plum trees, which belongs to the field of fruit and vegetable planting technology. The cultivation method includes fertilization, fruit pulling, potassium extraction, calcium supplement and bagging. The invention provides a cultivation method for improving the yield and quality of plum trees, which has the effect of improving tree nutrition, significantly improving fruit quality and significantly enhancing disease resistance and insect resistance; the invention combines plant growth regulator with mineral nutrition regulation, and physical measures to establish a simple, efficient, and environment-friendly technology for high yield and quality improvement of plum, which can increase the yield while taking into account the fruit quality. It has a significant effect on improving the single fruit weight, sugar content, hardness and appearance quality of the fruit, and has a very broad application prospect in high-quality and efficient cultivation of plum trees.

21: 2023/02610. 22: 2023/02/27. 43: 2023/05/03
51: C22C
71: HENAN UNIVERSITY OF SCIENCE AND TECHNOLOGY
72: WANG Zhou, WU Congcong, WEI Shizhong, CHEN Shuang, CHEN Nan, YOU Long, CHEN Chong, ZHANG Cheng
54: MEDIUM MANGANESE STEEL LINING MATERIAL FOR BALL MILLS AND PREPARATION METHOD THEREOF
00: -
The invention relates to a medium manganese steel lining material for ball mills and a preparation method thereof, and belongs to the technical field of wear-resistant materials. The medium manganese steel lining material for ball mills of the invention consists of the following components in percentage by mass: carbon 0.2 percent - 0.6 percent, manganese 5.0 percent - 8.0 percent, silicon 0.1 - 0.3 percent, phosphorus less than or equal to 0.015 percent, copper less than or equal to 0.5 percent, sulfur less than or equal to 0.015 percent, niobium 0.01 percent- 0.05 percent, chromium 0.3 percent - 0.8 percent, the balance of iron. The medium manganese steel lining material for ball mills is prepared by vacuum melting and pressure casting. The medium manganese steel lining material for ball mills has excellent mechanical properties and wear resistance, the bending strength is as high as 821 MPa, the hardness is 55 HRC, the impact work of a V-shaped sample is 30 J, and the service life is prolonged by more than 25% compared with that of the traditional high manganese steel lining material.

21: 2023/02611. 22: 2023/02/27. 43: 2023/05/10
51: G06T
71: ShanDong JiaoTong University
72: TANG Youan, ZHAO Lingyan, CHEN Gandong, WANG Fayong, LIU Yuchen, LIU Zheng
54: METHOD FOR MEASURING THE MATERIAL GRABBING ACCURACY
00: -
The invention discloses a method for measuring the material grabbing accuracy, which comprises the steps of: Using the acquisition module to obtain the image of the position of the manipulator to place materials; using the processing module to process

the position image to obtain the pixel coordinates of the center point of the material on the image; using the calculation module to obtain the world coordinate system position of the material based on the pixel coordinates, and completing the measurement of the grasping accuracy. On the one hand, this invention can avoid the details of common algorithms, and can focus more on the research of main algorithms, saving the processing time required for other algorithms to run; on the other hand, by transforming the image into a matrix, and then according to the diversity of matrix operations, different image processing changes can be achieved, which has the advantage of diversity of algorithms.

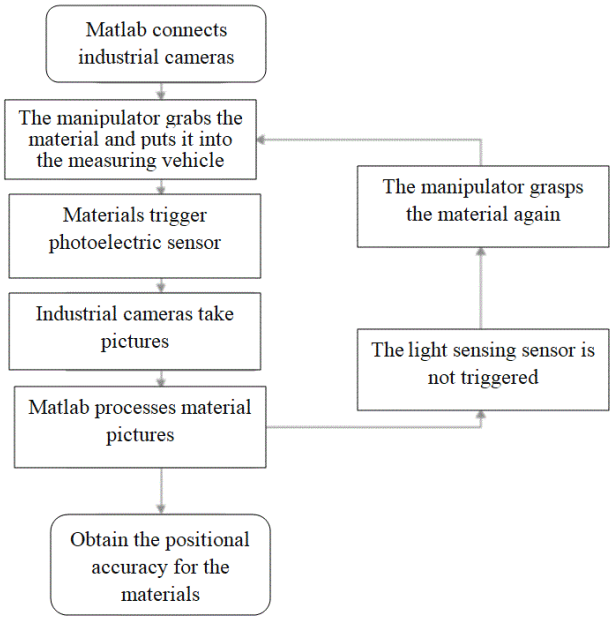

21: 2023/02612. 22: 2023/02/27. 43: 2023/05/10
51: D02G
71: Anhui Polytechnic University, Donghua University
72: WANG Yong, WANG Wei

54: ANTI-SLIP STAPLE/COMPOUND FILAMENT RING-SPUN CORESPUN YARN AND ONLINE PREPARATION METHOD THEREOF

00: -

The invention discloses an anti-slip staple/compound filament ring-spun corespun yarn and an online preparation method thereof, belonging to the technical field of spinning processing. The anti-slip staple/compound filament ring-spun corespun yarn comprises a core layer and a sheath layer. The sheath layer is natural or chemical short fiber, and the core layer is serous multi-filament. A set of multi-filament online sizing device is installed behind the ring spinning frame: one multi-filament unwinds from the bobbin and enters the sizing tank; the multi-filament output from the slurry tank passes through the middle of two grouting rollers, and the slurry first adheres to the multi-filament, and then is moderately squeezed by the grouting rollers, and the proper slurry will penetrate into the multi-filament and form a slurry film on the surface; the multi-filament is moderately heated by the heating plate, so that the serous film presents certain adhesion; and then the multi-filament is output by the guide roller, so that the multi-filament in the serous state of the core layer can be formed. The sheath staple fiber is normally drawn by the staple fiber whisker by the drafting mechanism of the ring spinning machine and then fed to the front roller jaw, and the serous multi-filament is fed to the back of the front roller jaw of the ring spinning machine through the yarn guide hook, and it is located at the center of the staple fiber whisker. At the front of the front roller jaw, the core serous multi-filament and sheath staple fiber are twisted to form ring-spun corespun yarn. According to the invention, the moderately dried multi-filament in the form of a serous film with certain adhesiveness is introduced in the spinning process of the corespun yarn, and the outer coated short fiber and the corespun yarn are in contact and infiltration bonding by utilizing the bonding effect of the serous liquid, so that the frictional adhesion between the fibers is increased, the slip resistance between the fibers is improved, and the strength and wear resistance of the corespun yarn are obviously improved; after the yarn is made, it does not need subsequent desizing, has no residue, is economical and environmentally friendly, and breaks the limitations of the traditional "spinning-sizing-desizing" process, and can be directly use for weaving warp yarn; the yarn preparation method has the advantages of unique technological process, low processing energy consumption, convenient production and the like, and can be used for industrial mass production.

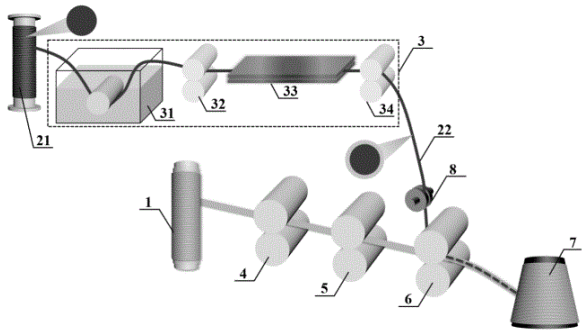

21: 2023/02613. 22: 2023/02/27. 43: 2023/05/11
51: A61H
71: ANHUI POLYTECHNIC UNIVERSITY, WUHU HIT ROBOT TECHNOLOGY RESEARCH INSTITUTE CO.,LTD., HARBIN INSTITUTE OF TECHNOLOGY WUHU ROBOT TECHNOLOGY RESEARCH INSTITUTE
72: XU Manman, LI Xueming, ZHANG Wenqing, ZHANG Zhen, CAO Chuqing, FU Yili, WANG Jie, ZHANG Zhebin
54: REHABILITATION MECHANICAL ARM
00: -
The invention relates to the field of human rehabilitation instruments, and discloses a rehabilitation mechanical arm. The key points of the technical scheme include a base and an upper arm bracket. The top of the base is provided with a sliding groove; the inner wall of the sliding groove is movably connected with a guide rail; one side of the guide rail is fixedly connected with an upper arm bracket; one side of the upper arm bracket is fixedly connected with an upper arm driving motor; the output shaft of the upper arm driving motor is fixedly connected with a drive gear through a coupling; one side of the upper arm bracket is fixedly connected with a lower arm driving motor; and the output shaft of the lower arm driving motor is fixedly connected with a driving synchronous belt wheel through a coupling. The rehabilitation mechanical arm fixes the patient's upper arm and lower arm through the bandage at the top of the bracket, controls the driving motor and drive gear to make the upper arm rotate around its axis, and can also make the joint between the upper arm and the lower arm bend, thus driving the patient to carry out rehabilitation training. The motor drive can be reasonably controlled according to the patient's own situation, so as to achieve the best rehabilitation training effect.

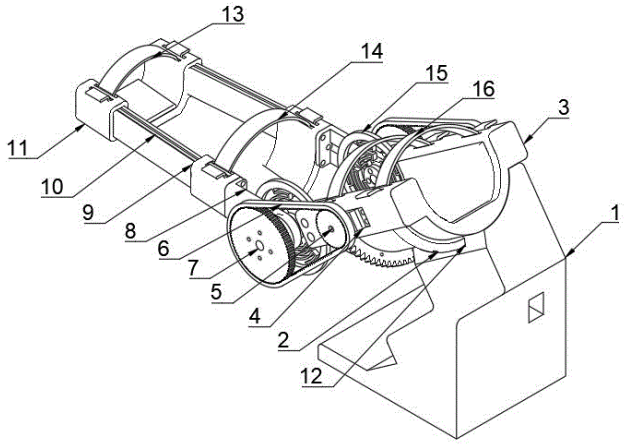

21: 2023/02614. 22: 2023/02/27. 43: 2023/05/11
51: A61K
71: BOZHOU UNIVERSITY
72: YU Mingjun, HUANG Jing, ZHU Hui, ZHANG Xiaoqian, ZHANG Yi
54: HISTONE DEACETYLASE 6 INHIBITOR CONTAINING CHALCONE STRUCTURE AND ITS PREPARATION METHOD AND APPLICATION
00: -
The present invention discloses a histone deacetylase 6 inhibitor containing chalcone structure and its preparation method and application, which belongs to the field of histone deacetylase inhibitor synthesis. The structural formula has R=H, 4-CH3, 3,4-CH3O, 4-CH3O, 4-F, 3,5-F, 2-Cl, 4-nBuO, 4-(CH3)2N, 4-AcNH or 4-TsNH. The present invention structurally modifies the alpha,beta-unsaturated ketones of chalcone and invents a histone deacetylase 6 inhibitor containing chalcone structure BZ-01 to BZ-11, all of these 11 compounds have good inhibitory effects on HDAC6 and can be used to prepare drugs for the treatment of HDAC6 overexpression-mediated diseases.

21: 2023/02615. 22: 2023/02/27. 43: 2023/05/16
51: A01H
71: DR HEMANT SOOD, PROF. RAJINDER SINGH CHAUHAN
72: Dr Hemant Sood, Prof. Rajinder Singh Chauhan
54: A MEDIA COMPOSITION AND A METHOD OF DEVELOPING A MICROPROPAGATION TECHNOLOGY FOR PICRORHIZA KURROA HERB
00: -
A media composition and a method (100) of developing a micropropagation technology for Picrorhiza Kurroa herb, comprises of: preparing a

modified media with a plurality of materials such as IBA, KN and table sugar in different concentrations, wherein the different concentration comprises of 1-3mg/l of IBA, 2-4mg/l of KN, and 20-40gm/l of table sugar, wherein 0.8% (w/v) agar-agar is added as a gelling agent; autoclaving the prepared media at 115-125oC and 14-16 lb/in2 pressure for 15-20 minutes; incubating the autoclaved media at a low temperature of 15±2oC with a same light and dark cycle in a plant tissue culture chamber; and dipping a shoot of Picrorhiza Kurroa herb in the incubated media kept in a culture vessel for root induction, wherein the rooted shoots are propagated in a greenhouse condition.

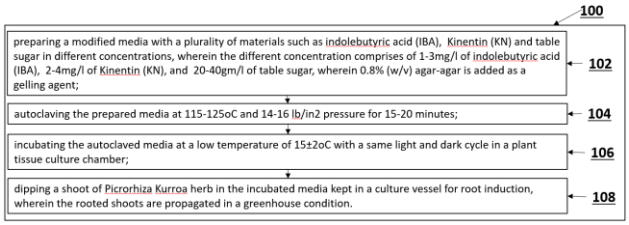

21: 2023/02616. 22: 2023/02/27. 43: 2023/05/16
51: H04L
71: Ambili K N, Jimmy Jose
72: Ambili K N, Jimmy Jose

54: A METHOD FOR MAKING AUTHENTICATION ENCRYPTION SCHEMES ROBUST AGAINST DIFFERENTIAL FAULT ATTACKS

00: -

The present disclosure relates to a method for making authentication encryption (AE) schemes robust against differential fault attacks. In the present disclosure, cellular automata is used for strengthening the authentication encryption (AE) schemes namely, ACORN v3, Elephant, and TinyJambu against differential fault attacks, wherein a programmable cellular automata (PCA) 90-150 is effectively deployed for making these schemes robust. Furthermore, after incorporation of PCA 90-150 into these schemes, a mathematical analysis is carried out of the invigorated schemes to show the significant improvement in term of security and robustness of these schemes, wherein results showed that by utilizing the pseudorandom and fast-diffusion properties of cellular automata, DFA attack becomes ineffective after the incorporation of PCA 90-150.

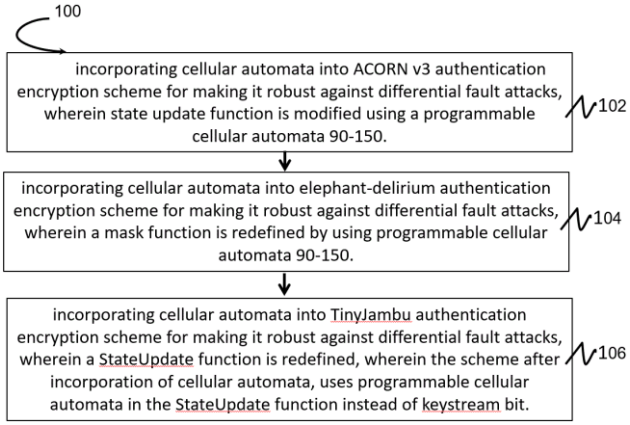

21: 2023/02617. 22: 2023/02/27. 43: 2023/05/16
51: D21J
71: Bipul Das, Rajeev Nayan Gupta, Yogesh Singh, Jasper Ramon, Devjani Devi, Bedanta Kumar Saharia
72: Bipul Das, Rajeev Nayan Gupta, Yogesh Singh, Jasper Ramon, Devjani Devi, Bedanta Kumar Saharia

54: A MANUALLY OPERATIVE SYSTEM FOR MANUFACTURING BOTTLE USING BAMBOO POWDER

00: -

The present disclosure relates to a manually operative system for manufacturing bottle using bamboo powder. In the present disclosure a system is proposed that can efficiently manufacture bottles made with bamboo powder using upper part, lower part, and cap manufacturing units. Through the proposed system, the bottles can be manufactured in less time, and without any need of electricity and high demand skill, and these features make the proposed system suitable for small and medium-scale manufacturing establishments. The propose system can manufacture bottle in various sizes, and at very low-cost.

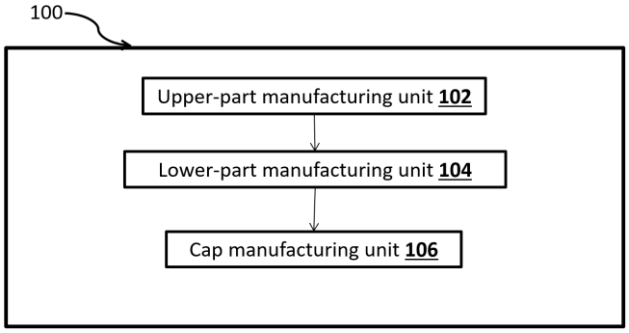

21: 2023/02618. 22: 2023/02/27. 43: 2023/05/16
51: G06Q

71: Binay Kumar Mishra, Bimal Kumar Mishra, Govind Kumar Jha, Sarita Jha
72: Binay Kumar Mishra, Bimal Kumar Mishra, Govind Kumar Jha, Sarita Jha

54: A METHOD FOR PERFORMING MATHEMATICAL MODELLING, FORECAST, AND ANALYSIS ON SPREAD OF COVID-19

00: -

The present disclosure relates to a method for performing mathematical modelling, forecast, and analysis on spread of COVID-19. The goal of the current disclosure is to comprehend the dynamics of COVID-19's spread among people by comparing India to the nations that have been most severely affected by the disease in terms of transmission rate, infection rate, fatality rate, and recovery rate. Regarding the fatality rate, infection rate, and lockdown impact in various countries, forecasting and statistical analysis using time series patterns are carried out, along with a comparison to India. The administration of Bhilwara, a desert town in Rajasthan, India, one of the early towns where the epidemic started in India, took successful control measures to reduce the spread of COVID-19, and this is another area where emphasis is placed.

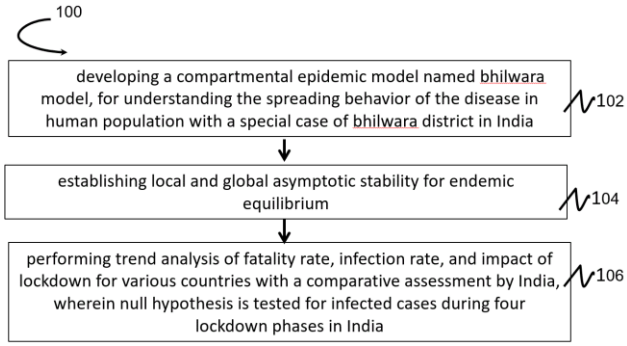

21: 2023/02619. 22: 2023/02/27. 43: 2023/05/16
51: G03B
71: Shaista Farheen, Harshavardhana M.N., Dr. Suraiya Tarannum
72: Shaista Farheen, Harshavardhana M.N., Dr. Suraiya Tarannum

54: AN OPTICAL SPECTRAL AMPLITUDE CDMA SYSTEM AND METHOD FOR UNIPOLAR CODES WITH DOUBLE WEIGHT CONSTRUCTION

00: -

An Optical Spectral Amplitude CDMA system (100) and method (200) Unipolar Codes with Double Weight Construction Design, comprises of: a MDW-ZCC module (102) to construct the code design of SAC-OCDMA, for producing best possible autocorrelation and cross-correlation values, wherein double weights construct the MDW codes; a detection module (104) for decoding a transmitter (104a) information according to a code-specific manner, wherein the detection module (104) employs a single photodiode (SPD) (104c) and direction detection (DD) techniques, wherein on a receiver side (104b), a Fiber-Bragg grating (FBG) filter (104d) in combination with the SPD (104c) is used for the detection of non-overlapping optical pulses, wherein shot noise is generated and optical-to-electrical conversion processing is reduced at the receiver side (104b); and an estimation module (106) for estimating bit error rate (BER), Q-factor and signal to noise ratio (SNR) by performing Gaussian approximation to assess efficiency of the system.

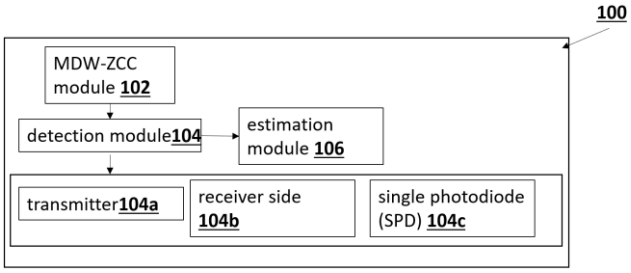

21: 2023/02620. 22: 2023/02/27. 43: 2023/05/16
51: G06Q
71: SAYYAD SHAFIYODDIN, MANGESH KOLAPKAR, Jayant Kolapkar, GAUS MOHIUDDIN SAYYAD, SANDIP ANPAT, ASHOK DONGARE, SHAIKH MUDASSAR, SANTOSH DUBAL, PATIL GOPINATH, ARUNA MAHAROLKAR
72: SAYYAD SHAFIYODDIN, MANGESH KOLAPKAR, Jayant Kolapkar, GAUS MOHIUDDIN SAYYAD, SANDIP ANPAT, ASHOK DONGARE, SHAIKH MUDASSAR, SANTOSH DUBAL, PATIL GOPINATH, ARUNA MAHAROLKAR

54: AN EMBEDDED SYSTEM FOR MEASUREMENT OF HUMIDITY, SOIL MOISTURE AND TEMPERATURE IN POLYHOUSE

00: -

The system comprises a plurality of sensors (102) for measuring a plurality of parameters such as the humidity, the soil moisture and temperature in the polyhouse; a plurality of signal conditioning device (104) connected to the plurality of sensors for optimizing captured analog signals obtained from each of the plurality of sensors (102); an analog multiplexer (106) connected to each of the plurality

of signal conditioning device (104) for data acquisition; a controller (110) connected to the converter (108) for generating a plurality of instructions to control the analog multiplexer (106), wherein the humidity data is collected based on a first instruction, the soil moisture data is collected based on a second instruction and the temperature data is collected based on a third instruction; and a display and a control module (112) connected to the controller (110) for displaying the plurality of parameters sensed by the plurality of sensors (102).

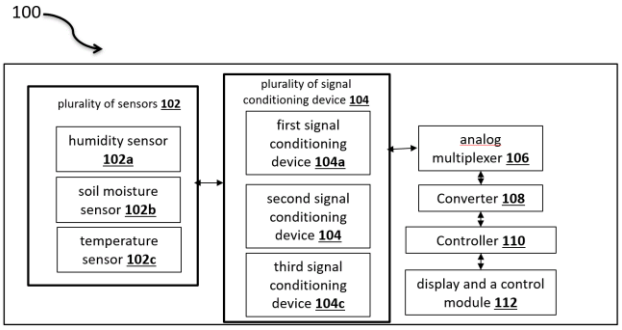

21: 2023/02625. 22: 2023/02/27. 43: 2023/05/16
51: E02B
71: Abinash Sahoo, Dr. Sandeep Samantaray, Dr. Vivek, Wajahat Annayat
72: Abinash Sahoo, Dr. Sandeep Samantaray, Dr. Vivek, Wajahat Annayat

54: A SYSTEM TO PREDICT GROUNDWATER LEVEL AND A METHOD THEREOF

00: -

A system (100) and a method (200) to predict groundwater level (GWL), comprises of: a data collection module (102) for collecting a plurality of data essential to predict groundwater level of a particular region; and a hybrid prediction module (104) associated with the data collection module (102) for predicting the GWL of the particular region, wherein the hybrid prediction module (104) is a support vector machine incorporated with ant lion optimizer (SVM-ALO) to estimate GWL in regular intervals based on the data collected by the data collection module.

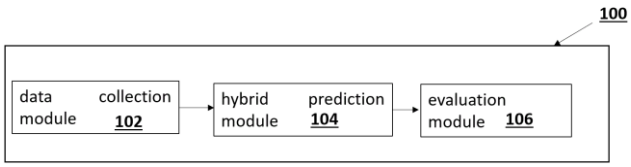

21: 2023/02626. 22: 2023/02/27. 43: 2023/05/16
51: B01J
71: Shazia Hasana, Syed Afzal Ahmad, Jhalak Gupta
72: Shazia Hasana, Syed Afzal Ahmad, Jhalak Gupta

54: A COMPOSITION FOR PREPARING STEARIC ACID-COATED PLASMONIC SILVER NANOPARTICLES AND A METHOD THEREOF

00: -

A method (100) for preparing Stearic Acid-Coated Plasmonic Silver Nanoparticles, wherein the method (100) comprises of: mixing of stearic acid and silver nitrate (AgNO3) in molar ratio of 2:1 by a magnetic stirrer at a defined condition; dissolving 2-3 g of Nickel (II) nitrate (NiNO3.6H2O) in 70-130 ml of deionized water by constantly stirring to obtain a mixture; adding 40-60 ml of 0.01 M aqueous triethylamine solution to the obtained mixture to form a precipitate of nickel oxide (NiO) powder, wherein the precipitate is centrifuged and repeatedly washed with the deionized water, followed by air and oven drying; and adding 1-3 part of silver nanoparticle (SNP) in 1-3 parts of NiO in a ratio of 1:3-3:1.

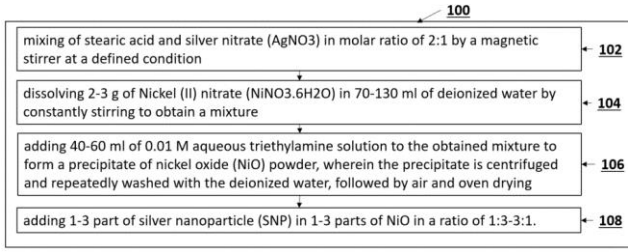

21: 2023/02627. 22: 2023/02/27. 43: 2023/05/16
51: D21B
71: Pondicherry University, Navnit Kumar Ramamoorthy, Venkateswara Sarma Vemuri, Kabilan Subash Chandra Bose, Revanth Babu Pallam, Sudha Rani Sadras, Vinoth Vengadesan, Renganathan Sahadevan
72: Navnit Kumar Ramamoorthy, Venkateswara Sarma Vemuri, Kabilan Subash Chandra Bose, Revanth Babu Pallam, Sudha Rani Sadras, Vinoth Vengadesan, Renganathan Sahadevan

54: A GREEN, HUMAN URINE-BASED, FUNGUS-ASSISTED, ALKALI-CUM-HYDROTROPIC LIGNOCELLULOSIC BIOMASS PRE-TREATMENT PROCESS

00: -

The present disclosure relates to a self-sustainable, green process engineering-incorporated, fungus-assisted, non-inhibitor-generating, moderate operational condition possessing, single-pot, alkali-

cum-hydrotropic pre-treatment procedure for lignocellulosic biomass. The suggested procedure uses human urine-derived, crude urea solution as the pre-treatment agent, and uses the water distilled from urine for biomass washing stages, prior to each unit-operation of the entire pre-treatment procedure. A sequential process, comprising an in-situ, fungal-enzyme-catalysed hydrolysis of urea, followed by low-temperature-mediated permeation of the ureolysis-resultant ammonia, and an autoclave-facilitated simultaneous ammonia-based pre-treatment and remnant, unhydrolyzed urea-based hydrotropic pre-treatment is performed over a period of 360 h. The proposed process results in 75% lignin degradation, 93% hemicellulose degradation, and 25% reduction of cellulose's crystallinity of a waste, weedy biomass. As a demonstrative process, while subjecting a waste, weedy biomass to the above-mentioned pre-treatment procedure, 62.8% saccharification was observed, and during fermentation, it resulted in a bio-ethanol yield of 0.44 g/g biomass, signifying an overall cellulose bio-conversion of 69.54%.

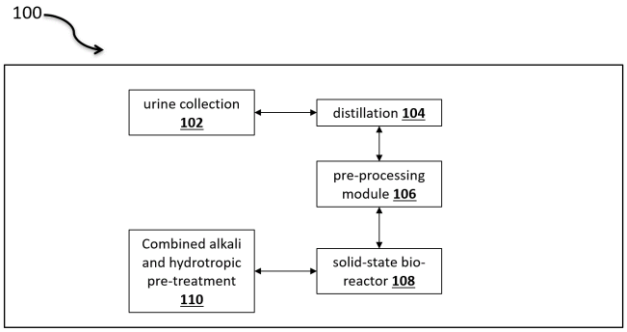

21: 2023/02628. 22: 2023/02/27. 43: 2023/05/16
51: G01N
71: Dr. Herojeet Rajkumar, Dr. Pradeep Kumar Naik, Dr. Madhuri S. Rishi
72: Dr. Herojeet Rajkumar, Dr. Pradeep Kumar Naik, Dr. Madhuri S. Rishi

54: A METHOD TO DEVELOP COMPREHENSIVE WATER QUALITY-INDEX-BASED ON ANALYTICAL HIERARCHY PROCESS TO ASSESS GROUNDWATER QUALITY

00: -

The method to develop a comprehensive water quality index (CWQI) based on analytical hierarchy process (AHP) to assess the groundwater quality; comprises selecting a set of objective parameters selected from physical parameters, chemical parameters, and health risk parameters and grouping in three clusters; assigning indicator parameters with a value between 1 and 9 on the basis of the public opinions and expert suggestions in order to construct a pair-wise matrix using pair-wise comparison among the parameters; calculating principal eigenvalue and eigenvector for each parameter; generating individual priority weight as unit weight of each selected parameter when consistent (i.e., consistency ratio (CR) < 0.10), else requesting for readjustment; calculating positive sub-index and negative sub-index of each parameter thereby determining final index positive score and negative score of a water sample respectively; and extracting parameters from the water samples and classifying the samples based on CWQI water classes for different purposes.

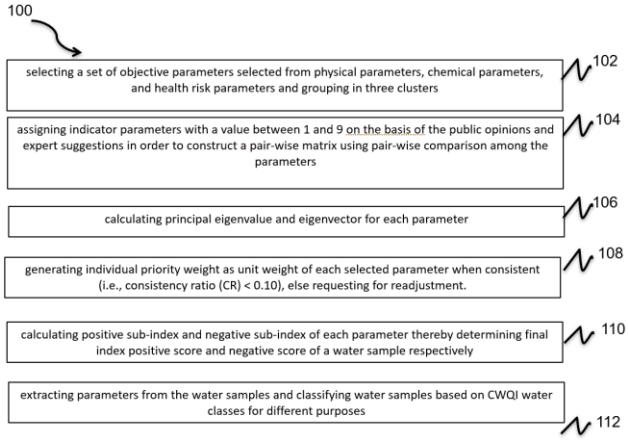

21: 2023/02629. 22: 2023/02/27. 43: 2023/05/16
51: H01J
71: KOVENDHAN MANAVALAN, PAUL JOSEPH DANIEL, JEAN MARIA FERNANDES, RATHIKA RAJENDRAN, REKHA PACHAIAPPAN, SOWRI BABU KOTIKALA, PURUSHOTHAM REDDY NANDARAPU, MUNIRAMAIAH REDDIVARI
72: KOVENDHAN MANAVALAN, PAUL JOSEPH DANIEL, JEAN MARIA FERNANDES, RATHIKA RAJENDRAN, REKHA PACHAIAPPAN, SOWRI BABU KOTIKALA, PURUSHOTHAM REDDY NANDARAPU, MUNIRAMAIAH REDDIVARI

54: VANADIUM PENTOXIDE-TIN (V2O5-SN) MESH ELECTRODE SYSTEM AND A METHOD FOR DEVELOPING AN INVERTED POLYMER SOLAR-CELL THEREOF

00: -

The present invention generally relates to a vanadium pentoxide-tin (V2O5-Sn) mesh electrode system for developing an inverted polymer solar cell

comprises an ITO coated glass substrate (102); a ultrasonication chamber (104) for degreasing the ITO coated glass substrate ultrasonically in a sequence using dilute acid, bi-distilled water, and acetone; a drying/plasma chamber (106) for drying the degreased substrate; a deposition vacuum chamber with stainless steel mesh (108) for depositing tin (Sn) metal and vanadium pentoxide (V2O5) through a shadow mask onto the ITO coated glass substrate using a thermal evaporation technique to form the mesh electrode; a stirrer (110) for stirring a solution of poly(3-hexylthiophene): phenyl-C61-butyric acid methyl ester (P3HT: PCBM) overnight to prepare the polymer blend solar cell; and a spin coating chamber (112) for coating the polymer blends solar cell over the V2O5-Sn mesh film in a N2 regulated glove box.

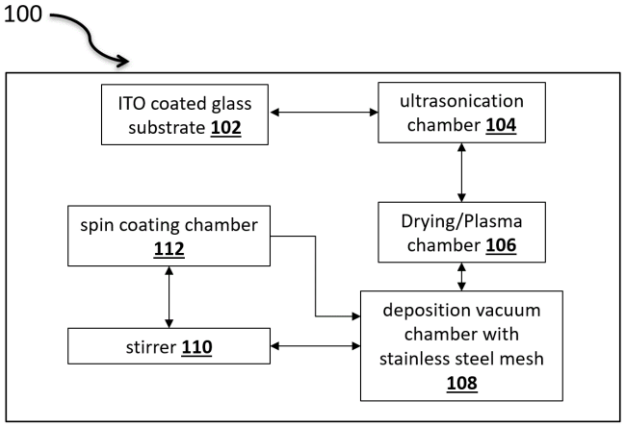

21: 2023/02630. 22: 2023/02/27. 43: 2023/05/02
51: E04B
71: Anhui Jianzhu University, China Railway Shanghai Design Institute Group Hefei Co., Ltd.
72: FAN, Jun, LI, Xu, QIN, Zhenyan, LU, Jiaqiao, LONG, Yu, ZHANG, Kangkang
54: ENERGY-SAVING MODULAR BUILDING WALL
00: -
The present disclosure relates to the technical field of modular building, and more specifically, to an energy-saving modular building wall, which includes a crossbeam mechanism and a wallboard mechanism. The crossbeam mechanism is movably connected with the wallboard mechanism. By means of the clamping between the butting groove arranged on one group of the wallboard and the butting plate arranged on the other group of the wallboard, an assembly process for two adjacent groups of the wallboards is implemented. After the wall structure is assembled, the space inside the wall can be changed by sliding the sliding blocks, without the need of re-assembly and disassembly, thus having better practicability. When the sliding block reaches the front side end of the sliding groove, the limiting column abuts against the front side groove wall of the limiting groove, and at this time, the angle of mounting the wallboard and the side beam can be adjusted by rotating the wallboard, so that the assembly of the inclined wall structure can be completed without changing the angle of the reference frame, the wall adaptability is greatly improved, the reference frames with different slopes do not need to be manufactured, thereby saving time and effort, and greatly improving the construction efficiency.

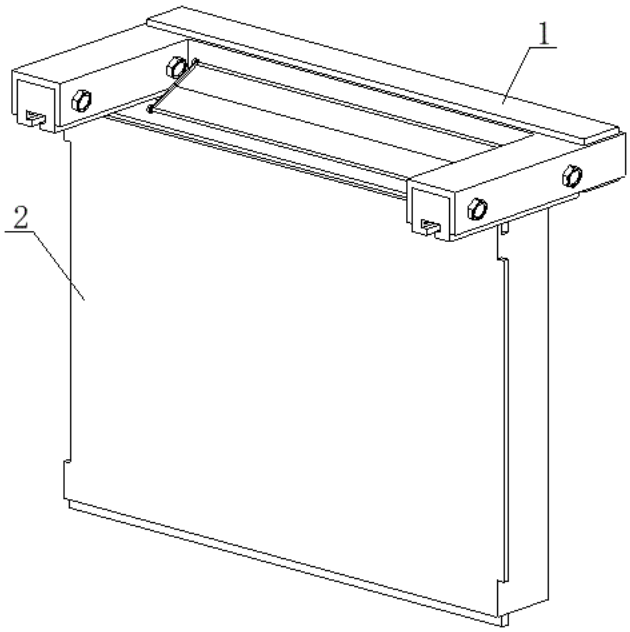

21: 2023/02631. 22: 2023/02/27. 43: 2023/05/02
51: C05D
71: South Subtropical Crops Research Institute, Chinese Academy of Tropical Agricultural Sciences
72: Yanan LIU, Weiqi SHI, Haiyang MA, Siru LIU
54: FUNCTIONAL FERTILIZER FOR FOLIAR APPLICATION AND PREPARATION METHOD AND APPLICATION METHOD THEREOF
00: -
The invention discloses a functional fertilizer for foliar application, a preparation method and an application method thereof, and relates to the technical field of foliar fertilizers. The preparation

method comprises the following steps: respectively mixing chitosan aqueous solution with magnesium salt and iron salt to obtain magnesium salt solution and iron salt solution; mixing a magnesium salt solution and an iron salt solution to obtain a mixed solution, mixing the mixed solution with an organic solvent, adding a cross-linking agent for cross-linking treatment, then adding a surfactant, and then adding an oxidant for oxidation treatment to obtain a suspension of microsphere fertilizer, and dispersing the microsphere fertilizer in a protective solution in which magnesium salt and iron salt are dissolved, where the cross-linking treatment refers to microwave heating for 2-3 min at the power of 300-400 W. The functional fertilizer contains two elements, magnesium and iron, and the chitosan component can also play an antibacterial and disease-resistant role, and it is not easy to be washed off by rain when sprayed on the leaves, which is beneficial to improving the utilization efficiency of functional fertilizer applied on the leaves.

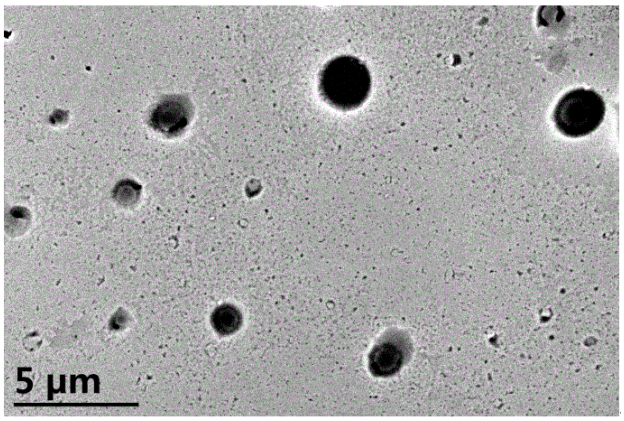

21: 2023/02632. 22: 2023/02/27. 43: 2023/05/03
51: G06Q
71: College of engineering, king Khalid university, Paul Rodrigues, Harun Bangali Abubakar Bangali, Javed Mallick, Mohd. Ahmed
72: Paul Rodrigues, Harun Bangali Abubakar Bangali, Javed Mallick, Mohd. Ahmed
54: AN AUTOMATED SYSTEM FOR DIGITAL TWIN FOR ASSET MANAGEMENT
00: -
The present disclosure relates to digital twin for asset management, in particular, the present invention relates to an automated system which implements an electrical digital twin for efficient operation, maintenance, and asset management. The system comprising of, a plurality of digital twins can be operatively connected to a plurality of virtual machines corresponding to remotely located physical machines. The digital twin comprises a remote server, at least one IoT module. The processing unit, configured to receive a set of signals from the one or more digital twins pertaining to the digital twins can access, receive, extract, compare the set of attributes from the set of signals received, and can compute the compared set of attributes The system predict the requirement of maintenance tasks for the physical machine, and send a notification for one or more required maintenance tasks to an operator device.

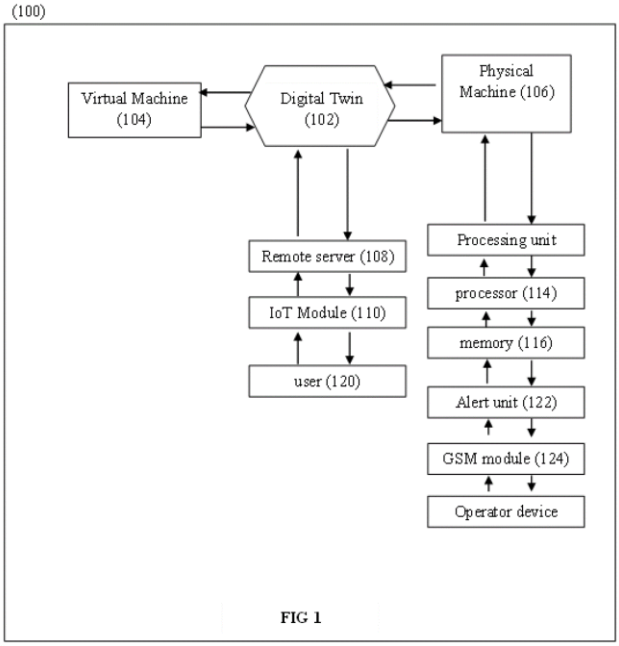

FIG 1

21: 2023/02633. 22: 2023/02/27. 43: 2023/05/03
51: B01D
71: Institute of Mechanics, Chinese Academy of Sciences
72: SHI Shiying
54: UNDERGROUND DOUBLE-VORTEX CYCLONE OIL-WATER SEPARATOR WITH GOOD SEPARATION EFFECT
00: -
The invention discloses an underground double-vortex cyclone oil-water separator with good separation effect, which comprises a spinning pipe section for outputting an oil-water mixture entering the spinning pipe section in the form of cyclone; a spinning stabilizing pipe section is connected to the

output end of the spinning pipe section and used for maintaining the oil-water mixture in the form of cyclone output by the spinning pipe section; and the separation pipe section is connected with the output end of the spinning stabilizing pipe section and used for separating the oil phase and the liquid phase of the oil-water mixture in the cyclone form output by the spinning stabilizing pipe section. The cyclone oil-water separator provided by the invention is provided with a spinning pipe section, a spinning stabilizing pipe section and a separation pipe section, and is in the same axial direction, so that the cyclone oil-water separator is more suitable for the structures of various well bodies; and meanwhile, the mixed fluid of the oil phase and the water phase in the separating state in the spinning stabilizing pipe section is guided and separated through the diversion structure and the inner pipe body, so that the separation effect of the oil phase and the water phase under primary cyclone separation is improved.

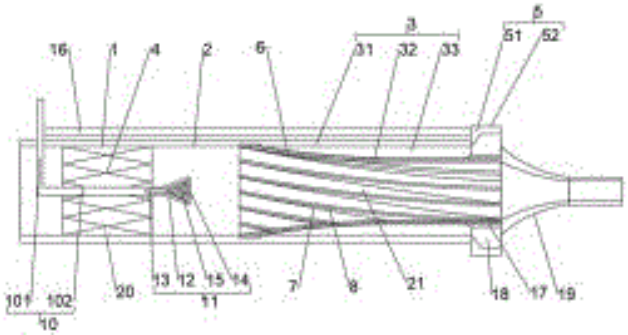

21: 2023/02634. 22: 2023/02/27. 43: 2023/05/03
51: B01D
71: Hainan Tropical Ocean University, Yazhou Bay Innovation Institute of Hainan Tropical Ocean University
72: WAN Wubo, SHI Yaqin, LIU Danyang, LIAO Daqi, LIN Mingxing, CHEN Lifei, WANG Yan, JIA Yufei

54: SEPARATION MEMBRANE LOADED WITH CARBON NANOTUBES, PREPARATION METHOD AND APPLICATION THEREOF

00: -

Disclosed is a separation membrane loaded with carbon nanotubes, a preparation method and application thereof; the preparation method of the material includes the following steps: dispersing carbon nanotubes in an organic solvent, and then adding polydimethylsiloxane to obtain a mixed solution; filtering the mixed solution through a glass fiber filter membrane in a suction mode until the membrane material is completely loaded with carbon nanotubes in the mix solution, and performing high-temperature curing treatment to obtain a separation membrane loaded with carbon nanotubes. In the invention, carbon nanotubes are load into a glass fiber filter membrane material, so that a rich microstructure is provided; under the modification of methyl trichlorosilane with low surface energy, the obtained modified material shows superhydrophobicity and has a demulsification function; at the same time, on the basis of excellent hydrophobic performance, it shows good self-cleaning ability and has broad application prospects.

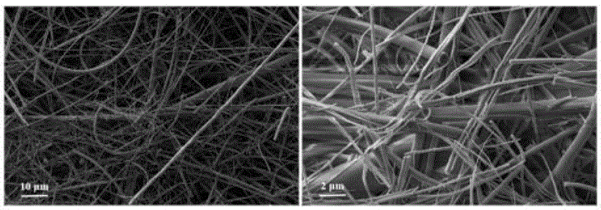

FIG. 1-1

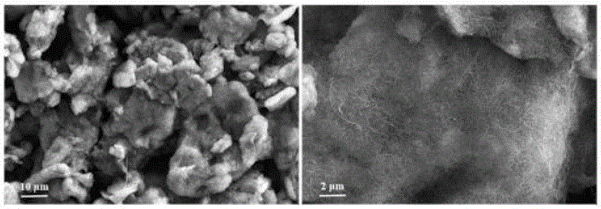

FIG. 1-2

21: 2023/02635. 22: 2023/02/27. 43: 2023/05/03
51: B01D
71: Hainan Tropical Ocean University, Yazhou Bay Innovation Institute of Hainan Tropical Ocean University
72: WAN Wubo, SHI Yaqin, WU Xiangen, CHEN Zhi, BAI Shiwei, GUO Yuang, LU Lin, LIU Weicheng

54: SUPERHYDROPHOBIC SEPARATION MEMBRANE MATERIAL FOR OIL PRODUCT RECOVERY, AND PREPARATION METHOD AND APPLICATION THEREOF

00: -

The invention discloses a superhydrophobic separation membrane material for oil product recovery, and a preparation method and application thereof. The method comprises the following steps: dissolving polydimethylsiloxane in an organic solvent and stirring to obtain a mixed solution; attache the mixed solution to the surface of the glass fib filter membrane; the glass fiber filter membrane is taken

out, naturally dried, cured at high temperature, and finally immersed in a solvent containing silica nanoparticles and n-hexane, so as to obtain the superhydrophobic separation membrane material for oil recovery. According to the invention, a polydimethylsiloxane (PDMS) solution is combined with a glass fiber filter membrane, and the polydimethylsiloxane (PDMS) solution is loaded on the glass fiber filter membrane, so that the prepared super-hydrophobic emulsion water separation membrane material has a contact angle of more than 150 degrees with water and a contact angle of 0 degrees with oil. Moreover, it has demulsification function, and with the hydrophobic and lipophilic modification mode, it has a good separation effect on various water-in-oil emulsions, and the separation efficiency can reach above 97 percent.

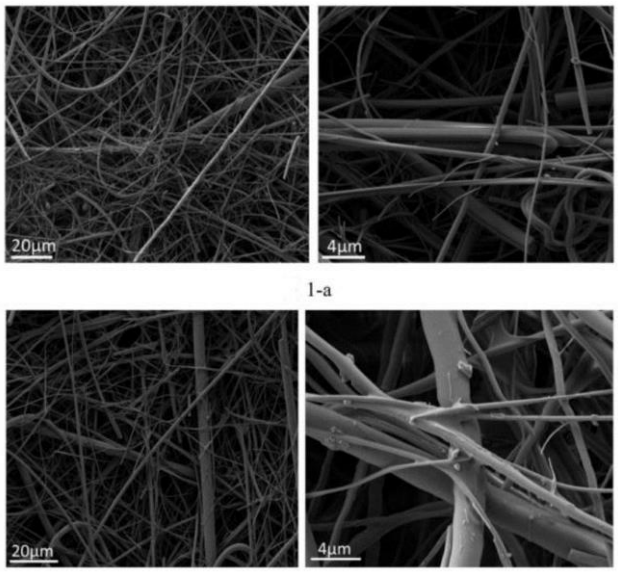

21: 2023/02636. 22: 2023/02/27. 43: 2023/05/10
51: A01G
71: Shandong Institute of Pomology
72: WEI Shuwei, JIAO Huijun, WANG Hongwei, YOU Weidong

54: METHOD FOR IMPROVING STABILITY OF LIQUID POLLINATION IN PEAR ORCHARDS

00: -

The invention discloses a method for improving stability of liquid pollination in pear orchards. The method for improving stability of liquid pollination in pear orchards comprises the following steps: (1) preparing nutrient solution; (2) preparing pollination solution; (3) spraying the pollination solution on pear flowers, once in the initial flowering period and twice in the full flowering period to complete pollination; (4) spraying antifreeze 24 h after spraying pollination solution every time. Compared with the traditional liquid pollination method for pear trees, the invention increases the pollen consumption when preparing the pollination solution, and at the same time, melatonin is added, and the pollination solution spraying method is also optimized to be sprayed for three times in flowering period, and the antifreeze is sprayed after spraying the pollination solution. By optimizing the traditional liquid pollination method, the pollination fruit setting rate of pear trees is greatly improved, and the stability of the pollination fruit setting rate is also obviously improved, which has high market application value.

21: 2023/02637. 22: 2023/02/27. 43: 2023/05/11
51: A23G
71: Hainan Tropical Ocean University
72: HU Yaqin, HU Zhiheng, GUO Yangyang

54: FORMULA AND PROCESSING TECHNOLOGY OF SEA SALT ICE CREAM

00: -

The invention provides a formula and a processing technology of sea salt ice cream, which belongs to the technical field of food processing. The preparation method of the invention includes sea water distillation, deep sea salt drying, liquid mixing, sterilization, homogenization, cooling, aging, hardening and other processes. The purpose of the invention is to take nutrition and health as the core points, and taste and function as the innovation breakthrough points, to prepare a sea salt ice cream with zero flavor and zero pigment, rich nutritional value, health and green, and broad market prospects. The selection of each ingredient of this ice cream is compared with that of the same kind of substitutable raw materials in terms of nutritional value, efficacy and other aspects and actual tests, so that the selection of basic raw materials is optimized, the production process is rigorous and scientific, and the finished product reaches the expected value.

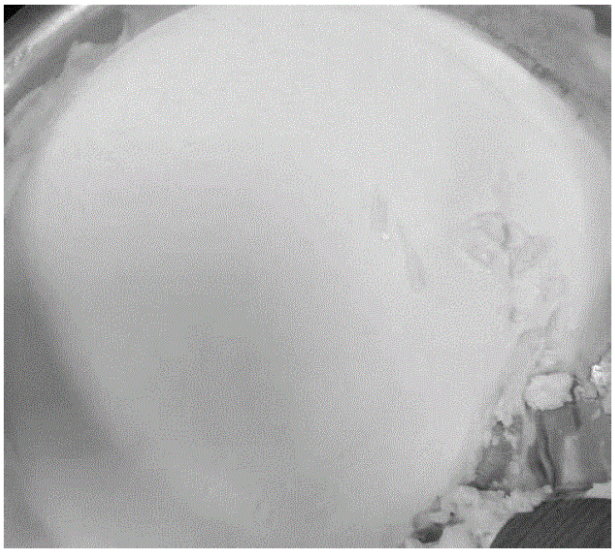

21: 2023/02638. 22: 2023/02/27. 43: 2023/05/11
51: B08B
71: JIAXING VOCATIONAL&TECHNICAL COLLEGE
72: LU Chun, ZHAO Yude, LI Chenxi
54: PAINTING TOOL STORAGE SYSTEM WITH CLEANING FUNCTION
00: -
The invention discloses a painting tool storage system with cleaning function, which comprises a storage box and a cleaning box, wherein the cleaning box and the storage box are detachably connected, a water diversion structure, a heating structure and a drainage structure are arranged in the cleaning box, and a partition plate is arranged in the cleaning box, which divides the cleaning box into a cleaning area and a water purification area; the water diversion structure is arranged in the cleaning area and comprises a power supply, a water pump, a filter shell, a motor, a cutting blade and a filter screen; the heating structure is arranged in the cleaning area and located at the bottom of the cleaning box, and the heating structure is electrically connected with the power supply; the drainage structure comprises a connecting pipe, a one-way valve, a drainage pipe and suction accessories, wherein the connecting pipe is arranged in the partition plate, the connecting pipe is used for connecting the cleaning area and the water purification area, the one-way valve is arranged in the connecting pipe, and a plurality of suction accessories are placed in the water purification area. The invention reasonably utilizes water resources and is convenient to use in the field.

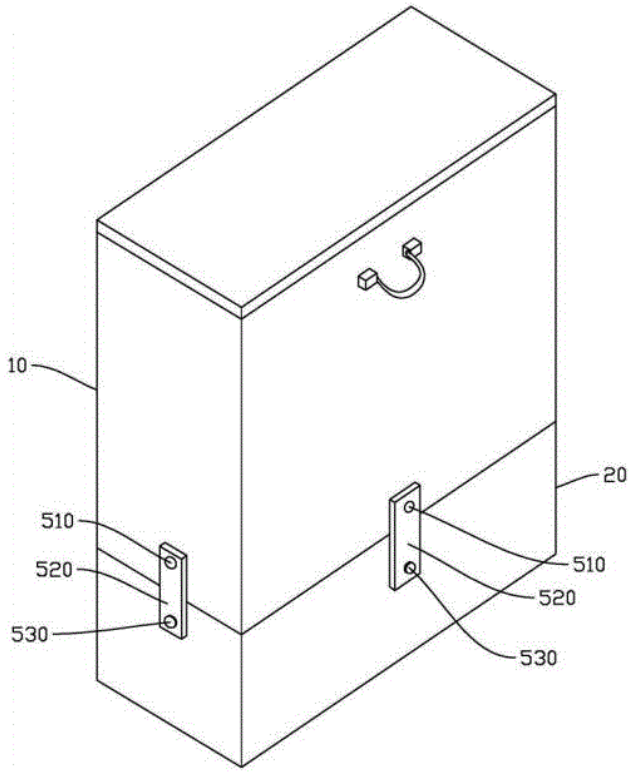

21: 2023/02639. 22: 2023/02/27. 43: 2023/05/11
51: E01D
71: Beihua University
72: ZHENG Xinliang
54: ANTI-VIBRATION DAMPING DEVICE FOR BRIDGES
00: -
The invention discloses an anti-vibration damping device for bridges, which comprises a bottom plate, wherein both ends of the top surface of the bottom plate are fixedly provided with limiting rods; a mounting plate is slidably sleeved on the limiting rods; a mounting groove is formed in the middle of the top end of the mounting plate; and a first damping mechanism is arranged in the mounting groove; the first damping mechanism is fixedly connected with a connecting column, and the top end of the connecting column is fixedly connected with a top plate; a second damping mechanism is arranged between the bottom plate and the mounting plate, and the bottom plate is connected with the mounting plate through the second damping mechanism; the top end of the limiting rod is fixedly connected with a limiting plate, and the mounting

plate is positioned below the limiting plate, and the mounting plate is in limiting fit with the limiting plate. The invention can reduce the vibration amplitude of the bridge when it slightly vibrates, and can reduce or avoid the left and right shaking amplitude of the bridge when it shakes left and right due to vibration, and at the same time, it can play a role in limiting the bridge left and right, with good damping effect and meeting the existing use requirements.

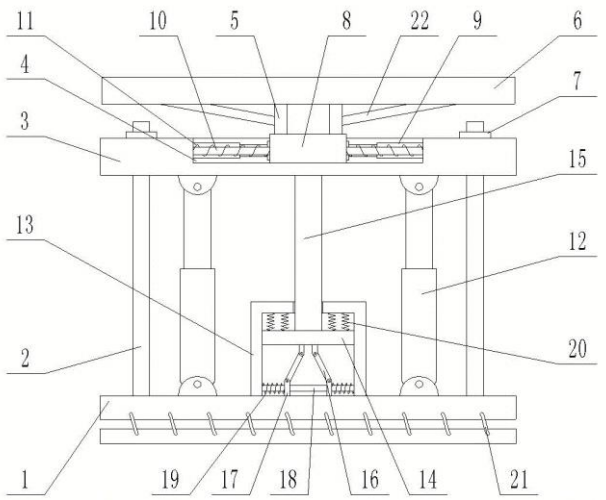

21: 2023/02640. 22: 2023/02/27. 43: 2023/05/11
51: A01F
71: Hainan Tropical Ocean University
72: HU Yaqin, HU Zhiheng, YANG Xin
54: METHOD FOR PREPARING SEA GRAPE PARTICLES IN DEEP OCEAN WATER
00: -
The invention relates to the field of research and development of marine biological resources utilization, in particular to a method for preparing sea grape particles in deep ocean water. According to the invention, deep ocean water, sea grapes and sodium alginate are taken as main bodies, and spherical particle products are obtained by titration granulation technology. The preparation method of the marine deep-water sea grape particles comprises the steps of cleaning, deodorizing, pulping, homogenizing, adjusting acid, granulating, soaking, draining, vacuum packaging and the like. The invention aims at preparing a safe, natural and nutritious sea grape particle product, which can be used as an auxiliary material in various food processing fields. The addition of deep ocean water further improves the color, taste and nutritional value of the particle, and broadens the application prospect of the sea grape and the deep water. The sea grape particle obtained by the preparation method has good quality and flavor evaluation.

21: 2023/02641. 22: 2023/02/27. 43: 2023/05/11
51: A61K
71: Dr. Kumaraswamy Gandla, Dr.Kumar Raja Jayavarapu, Atchutuni V S Ravi Sai Nadh, Ghanta Vijaya Kumar, Baratam Anupama, Lakshmi Samrajyam Katta, Dr.Bharghava Bhushan Rao Pathange, Dr Prasad Thota
72: Dr. Kumaraswamy Gandla, Dr.Kumar Raja Jayavarapu, Atchutuni V S Ravi Sai Nadh, Ghanta Vijaya Kumar, Baratam Anupama, Lakshmi Samrajyam Katta, Dr.Bharghava Bhushan Rao Pathange, Dr Prasad Thota
54: TRANSDERMAL DRUG DELIVERY SYSTEM
00: -
The invention discloses transdermal drug delivery system and method of preparation. The transdermal drug delivery system comprises of a drug; Polymerized rosin; Polyvinyl pyrrolidone; and Diltiazem hydrochloride. The method comprises of taking a glass ring and wrapping bottom of the glass ring with aluminum foil; pouring Polyvinyl alcohol and drying to cast backing membrane; preparing drug

matrix by dissolving drug, Polymerized rosin and Polyvinyl pyrrolidone in chloroform; adding dibutyl phthalate and stirring to obtain a dispersion; casting the dispersion on the backing membrane in a petri dish and drying; and placing an inverted funnel on the petri dish for controlled solvent evaporation. It presents an optimal transdermal drug delivery system. The results show that the drug content analysis of the prepared the transdermal drug delivery film/patch showed that the method used to prepare the transdermal drug delivery film/patch is capable of giving uniform drug content and minimum batch variability.

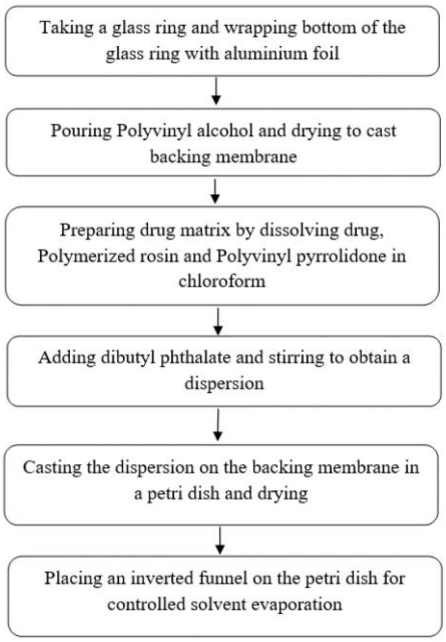

Figure 1: Flowchart of method of preparation of transdermal drug delivery system

21: 2023/02642. 22: 2023/02/27. 43: 2023/05/11
51: F16M
71: ANHUI UNIVERSITY OF SCIENCE AND TECHNOLOGY
72: YANG, Liangliang

54: SURVEYING AND MAPPING INSTRUMENT POSITIONING DEVICE FOR SURVEYING AND MAPPING ENGINEERING

00: -

The present disclosure discloses a surveying and mapping instrument positioning device for surveying and mapping engineering, belonging to the technical field of engineering surveying and mapping, which includes a connecting seat, a supporting rod and an electric telescopic rod. The outer side of the connecting seat is connected with a tripod, the support rod and the electric telescopic rod are respectively connected to two sides of the outer side of the connecting seat, and one end of the support rod is provided with a first hinge, the outer side of the first hinge is connected with a movable hollow block, and the surface of the movable hollow block is connected with a mapping instrument mounting base. The invention can conveniently and automatically adjust the horizontal state of the surveying and mapping instrument after the tripod is stably placed on the ground by arranging the support rod, the first hinge, the electric telescopic rod, the sliding block, the traction guide rail, the second hinge and the level meter, so as to avoid the surveying and mapping operation of the surveying and mapping instrument in an inclined state, thereby improving the surveying and mapping accuracy of the surveying and mapping instrument and further improving the practicability of the positioning device of the surveying and mapping instrument for surveying and mapping engineering.

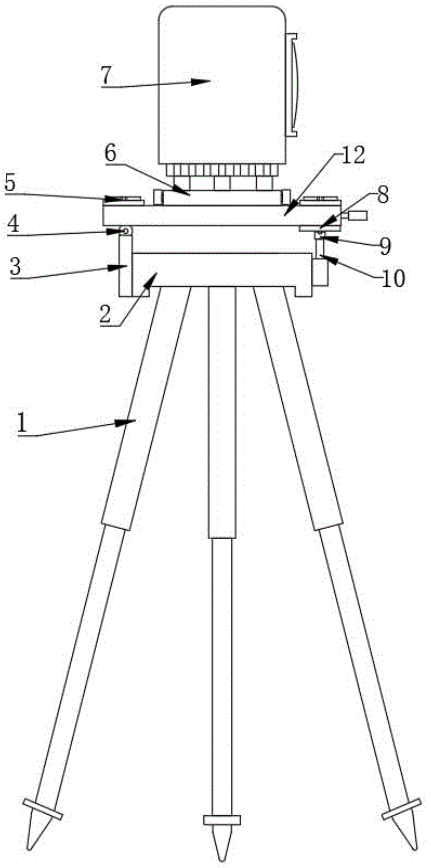

21: 2023/02643. 22: 2023/02/27. 43: 2023/05/11
51: A61K
71: Zhengzhou University of Industry Technology
72: FENG Yali, YIN Weiping, FENG Shuang, MAO Yajun, LI Ke, SUN Shuaihao, HU Yifan
54: ARTEMISIA ARGYI ESSENCE SUITABLE FOR ALLERGIC CONSTITUTION AND PREPARATION METHOD THEREOF
00: -
Disclosed are an Artemisia argyi essence suitable for allergic constitution and its preparation method, including the following raw materials in parts by weight: Artemisia argyi plant essential oil 3-10 parts, squalane 2-5 parts, vitamin E 2-5 parts, nicotinamide 2-7 parts, provitamin B5 3-10 parts, amino acid humectant 2-7 parts, 1 percent hyaluronic acid solution 15-30 parts, xanthan gum 0.4-1 part and deionized water the rest. The specific preparation method includes the following steps: mixing squalane and vitamin E, uniformly stirring, heating to 60-85 degree Celsius to obtain an oil phase mixture, and keeping the temperature for later use; adding deionized water into a water phase pot, slowly adding xanthan gum while stirring, heating, uniformly dispersing, adding nicotinamide, provitamin B5, amino acid humectant, 1 percent hyaluronic acid solution, Artemisia argyi pure dew and honeysuckle pure dew, heating to 60-85 degree Celsius, and keeping the temperature for 20-50 min to obtain a water phase mixture for later use; slowly adding the oil phase mixture into the water phase mixture, mixing until a uniform white emulsion matrix appears, stopping stirring, and naturally cooling to room temperature; and adding Artemisia argyi essential oil and stirring evenly to obtain Artemisia argyi essence suitable for allergic constitution. The essence is formulated with natural plants, contains no chemical preservatives, is natural and mild, is safe and effective, and has dual effects of soothing, caring, anti-inflammatory and analgesic.

21: 2023/02644. 22: 2023/02/27. 43: 2023/05/11
51: E04B
71: Huzhou Vocational and Technical College
72: BAO Yibei, XIE Enpu, YU Lele, LI Chao
54: MODULAR CONCRETE-FILLED STEEL TUBULAR COLUMN CONNECTION STRUCTURE
00: -
The invention discloses a modular concrete-filled steel tubular column connection structure, which comprises a first module column, a steel tube is fixedly connected to the outer wall of the first module column, a column pile is fixedly connected to the bottom of the first module column, and a second module column is detachably connected to the top of the first module column through a backing plate, and the backing plate is provided with positioning assemblies, which are respectively adapted to the first module column and the second module column; the side wall of the backing plate is symmetrically fixedly connected with a limiting assembly, and a lock ring is sleeved on the limiting assembly, and the lock ring is abutted with the steel tube. The invention accelerates the installation speed of the module column, improves the working efficiency, saves time and manpower, and has strong stability and reduces the probability of safety accidents.

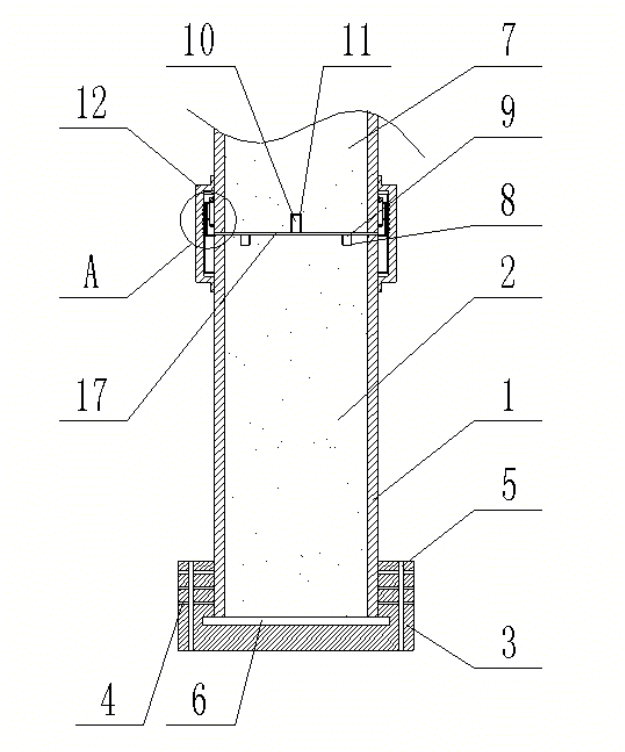

21: 2023/02645. 22: 2023/02/27. 43: 2023/05/11
51: H01G
71: YANTAI UNIVERSITY
72: SUI Zhuyin, ZHANG Liwei, CHENG Feijie, SONG Qian
54: PREPARATION METHOD OF ACTIVATE CARBON LITHIUM TITANATE LITHIUM ION CAPACITOR
00: -

Disclosed is a preparation method of an activated carbon lithium titanate lithium ion capacitor, and relates to the technical field of electrochemical energy storage. The method includes: (1) preparing porous activated carbon as a positive electrode active material; (2) preparing active carbon doped lithium titanate as a negative electrode active material; (3) preparing a positive electrode sheet: preparing positive electrode slurry from positive electrode active material, conductive agent and binder, coating on one side or both sides of the positive electrode current collector, drying and rolling to form a positive electrode active material layer; laying metal lithium on the surface of the positive electrode active material layer, and rolling to form a lithium metal layer to obtain a positive electrode sheet; (4) preparing a negative electrode sheet: preparing negative electrode slurry from negative electrode active material, conductive agent and binder, coating on one side or both sides of a negative electrode current collector, drying and rolling to form a negative electrode active material layer to obtain a negative electrode sheet; and (5) preparing a capacitor: assembling the positive electrode sheet, the negative electrode sheet, the diaphragm and the electrolyte to obtain the activated carbon lithium titanate lithium ion capacitor.

21: 2023/02646. 22: 2023/02/27. 43: 2023/05/11
51: A61K
71: Zhengzhou University of Industry Technology
72: YIN Weiping, WANG Jiangang, FENG Yali, JIANG Yaling, SHU Shengnan, SUN Shuaihao, ZHONG Jie

54: CHUANXIONG NATURAL ANTIDEPRESSANT SMELL STICK AND PREPARATION METHOD THEREOF

00: -

The invention provides a Chuanxiong natural antidepressant smell stick and a preparation method thereof, and belongs to the technical field of traditional Chinese medicines. The Chuanxiong natural antidepressant smell stick comprises, by weight, 5-20 parts of Chuanxiong natural essential oil, 55-65 parts of anhydrous ethanol, 12-39 parts of distilled water and 0.5-1.5 parts of rosemary essential oil/lavender essential oil. The Chuanxiong natural essential oil is obtained by treating raw materials of Chuanxiong with cellulase aqueous solution, steam distillation, extraction and vacuum distillation. The preparation method of the Chuanxiong natural antidepressant smell stick prepared by the invention is simple, the cost is low, the anxiety relieving and anti-depression effects are remarkable, the use is convenient, and the application prospect is broad.

21: 2023/02647. 22: 2023/02/27. 43: 2023/05/03
51: G01N
71: Institute of Chinese Materia Medica, China Academy of Chinese Medical Sciences, Guizhou Bailing Group Pharmaceutical Co., ltd.
72: ZHOU Yanyan, ZHAO Haiyu, BIAN Baolin, WANG Hongjie, LUO Keke, SI Nan, YANG Jian, WEI Xiaolu, CHEN Yunqin, QIN Guangyuan, WU Guihui, WU Dan
33: CN 31: 2022104730506 32: 2022-04-29

54: BIOMARKER OF EXCESS HEAT SHANGHUO (UPPER FEVER) SYNDROME INTERVENED BY HUANGLIAN JIEDU PILLS AND APPLICATION THEREOF

00: -

Disclosed are a biomarker of excess heat shanghuo (upper fever) syndrome intervened by Huanglian Jiedu Pills and an application thereof, and relates to the field of biomedicine. The biomarker is TNF-alpha, IL-8, IL-10, 4-HNE, succinic acid, pantothenic acid or hypoxanthine. Through a randomized, double-blind, multicenter, placebo-controlled large sample size exploration and screening study in Phase II clinical practice, it is found that IL-10 in saliva, 4-HNE in plasma and pantothenic acid and hypoxanthine in urine may be biomarkers for the

therapeutic effect of Huanglian Jiedu Pills or the pathogenesis evolution of “Shi Re Huo Du” syndrome.

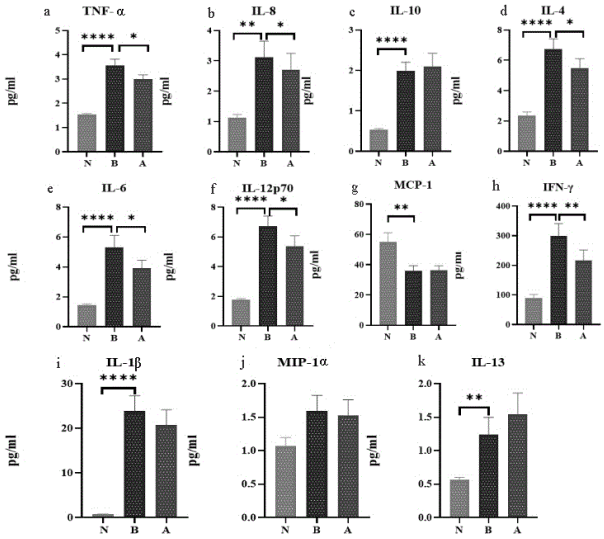

21: 2023/02648. 22: 2023/02/27. 43: 2023/05/11
51: E04G
71: China Railway Shanghai Design Institute Group Hefei Co., Ltd., Anhui Jianzhu University
72: LI, Xu, LU, Jiaqiao, LONG, Yu, ZHANG, Kangkang, FAN, Jun

54: BUILDING SUPPORT PLATE EASY TO BE ASSEMBLED AND SECURED

00: -

The invention relates to the field of building technologies, in particular to a building support plate which is convenient to be assembled and secured. A steel pipe is fixedly connected to the lower end of the support plate, and a left clamping plate is movably connected to the left side of the steel pipe. A right clamping plate is movably connected to the right side of the steel pipe, an arc cover is fixedly connected to the lower side of the left clamping plate, an arc plate is fixedly connected to the lower side of the arc cover, and a telescopic rod is fixedly connected to the inside of the arc cover. An extrusion plate is fixedly connected to the right side of the telescopic rod, a drawing plate located at the lower side of the extrusion plate is movably connected between the arc cover and the arc plate, and a convex block is fixedly connected to the right side of the drawing plate. The structure is ingenious, easy to disassemble and install the steel pipe support, and the connection relationship between the steel pipes is more compact, the connection strength is high. through the mutual cooperation between the structures, it has good market competitiveness and is worth recommending.

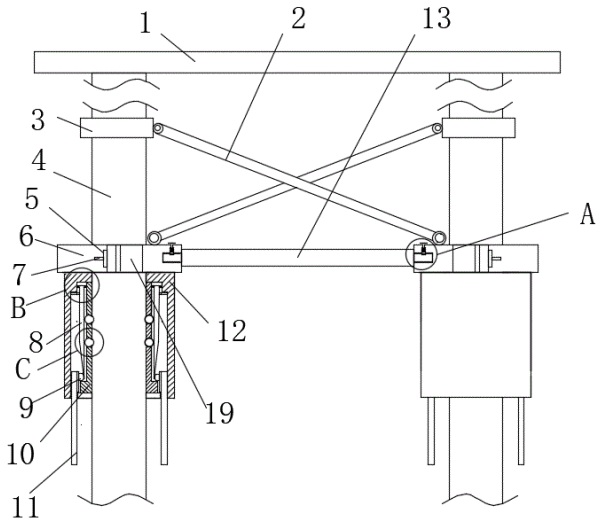

21: 2023/02649. 22: 2023/02/27. 43: 2023/05/11
51: A61K
71: Institute of Chinese Materia Medica, China Academy of Chinese Medical Sciences
72: ZHAO Xiaoang, JIN Rixian, Tian Jixiang, ZHANG Dong, LIN Longfei, WU Hongwei, WANG Yun

54: TRADITIONAL CHINESE MEDICINE COMPOUND, PREPARATION AND USE THEREOF

00: -

The invention relates to a traditional Chinese medicine compound with anti-inflammatory, analgesic and detumescence effects based on the clinical experience of Mr. Zhang Renji, an old traditional Chinese medicine doctor, and a preparation method and application of the compound extract; the invention also relates to a pharmaceutical composition containing the compound extract. The invention uses one or more of solvent extraction, solvent extraction, resin adsorption and other processes to prepare a compound extract, and the compound extract is made into an internal dosage form for oral administration and an injection and external dosage form for non-oral administration: powder, granule, tablet, capsule, pill, suppository, intestinal solvent, injection, syrup, emulsion, suspension, tincture, ointment, spray and the like; the compound extract of the invention may be used for preparing traditional Chinese medicine compound medicines for treating

gynecological inflammation, climacteric syndrome, lumbar muscle strain, lumbocrural pain, osteoporosis, hyperlipidemia, hypertension, preventing cancer, insomnia, hepatitis, coronary heart disease, gastropathy bleeding, mental system diseases, anti-inflammatory and antiviral diseases, traumatic injuries and other diseases.

21: 2023/02650. 22: 2023/02/27. 43: 2023/05/11
51: C04B
71: Beijing Building Research Institute CO., LTD. OF CSCEC, Beijing NO.6 Construction Engineering Quality Test Department CO., LTD., China Construction First Group Corporation Limited, Hebei Xiong'an Kecheng Inspection Certification CO., LTD.
72: WANG Changjun, WANG Xianzhang, HU Zhigang, PANG Sen, LIU Mian, WANG Jian, XU Dandan, LI Xiaoxiao, CHEN Kang, ZHANG Xuewei, CAI Qian
54: LOW VISCOSITY AND HIGH STRENGTH CEMENTITIOUS REPAIRING GROUTING MATERIAL AND ITS PREPARATION METHOD AND APPLICATION
00: -
The invention discloses a low viscosity and high strength cementitious repairing grouting material and its preparation method and application. The repairing grouting material comprises the following components by mass percentage: 30 - 50 percent cement, 10 - 30 percent mineral admixture, 15 - 30 percent fine aggregate, 0.4 - 2 percent functional material, 4 - 9 percent composite admixtures, 2 - 5 percent waterproof agent, and the rest is the mixing water. The preparation method is as follows: putting the composite admixtures, functional materials, waterproof agents and mineral admixtures into the mixing bin and mixing; adding cement and fine aggregate into the mixing bin and mixing; forming a dry mixture of low viscosity cementitious repairing grouting material, packaging in bags, transporting in tankers; weighing the dry mixture and mixing water in proportion on the construction site, and mixing them to prepare the low viscosity cementitious repairing grouting material. The low viscosity cementitious repairing grouting material provided by the invention can pass through a 3mm conveying pipe under its own gravity, and can realize airless, quantitative repairing/fixing of grouting cavities (holes), micro cracks, etc. in the reinforcement sleeve.

21: 2023/02651. 22: 2023/02/27. 43: 2023/05/11
51: A61M
71: The first affiliated hospital of bengbu medical college
72: DONG Huaifu, ZHENG Haiyan, DONG Xiaoyu, YAN Xuemei
54: INTUBATION FIXING DEVICE FOR CHILDREN'S RESPIRATORY DEPARTMENT
00: -
The invention relates to an intubation fixing device for children's respiratory department, which relates to the technical field of medical instruments. The intubation fixing mechanism is arranged at the front side of the catheter sleeve, and is movably clamped on the outer side wall of the tracheal intubation; two front tooth pads are respectively and fixedly arranged on the upper and lower side walls of the rear end of the catheter sleeve; there are two molar spreading mechanisms, which are respectively arranged on the left and right side walls of the catheter sleeve; the mandibular fixing mechanism is arranged at the bottom of the catheter sleeve. The oral cavity of children can be spread, and the intubation device can be fixed through the spreading device at the same time, so that the firmness of tracheal intubation connection and the stability of gas transmission are improved, the insertion depth is convenient to adjust, and the operation is more convenient.

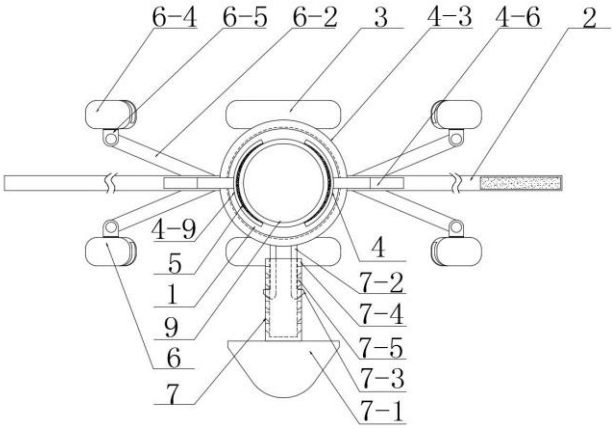

21: 2023/02653. 22: 2023/02/27. 43: 2023/05/11
51: C08B
71: SHANGHAI UNIVERSITY OF MEDICINE & HEALTH SCIENCES

72: LI Tingting

54: METHOD FOR IMPROVING EXTRACTION RATE OF ACTIVE CRUDE POLYSACCHARIDE FROM CELL WALL OF PHELLINUS BAUMII PILAT FRUITING BODY

00: -

Disclosed is a method for improving extraction rate of active crude polysaccharide from cell wall of Phellinus baumii Pilat fruiting body, including: step 1: pretreating residues of fruiting bodies; step 2: superfine grinding of Phellinus baumii Pilat residues; and step 3: extracting active crude polysaccharide from the cell wall of Phellinus baumii Pilat fruiting body; wherein the raw material adopted in the step 1 is the residues of water extraction of intracellular polysaccharide from fruiting bodies, and the step 3 adopts the process of water extraction and alcohol precipitation; the preparation method also includes the step of further purifying the crude polysaccharide with cell wall activity of Phellinus baumii Pilat fruiting body; the invention also relates to an application of active crude polysaccharide from cell wall of Phellinus baumii Pilat fruiting body obtained by the preparation method. Compared with the prior art, the preparation method of the invention adopts the residues extracted from Phellinus baumii Pilat fruiting bodies as raw materials, thus realizing the recycling of wastes; moreover, the active crude polysaccharide prepared by the invention is a stable macromolecular polysaccharide with high content and good immune activity.

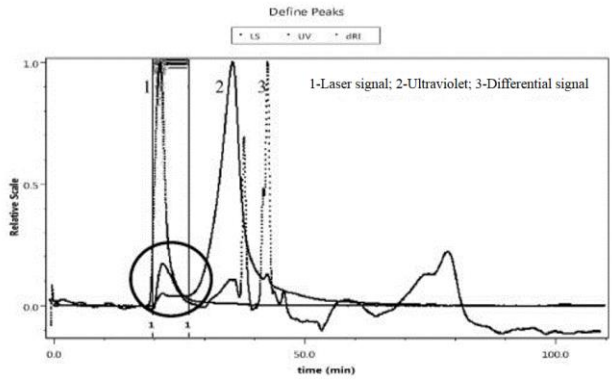

21: 2023/02654. 22: 2023/02/27. 43: 2023/05/10
51: B07B
71: China Railway Shanghai Design Institute Group Hefei Co., Ltd.
72: LI, Xu, FAN, Jun, LU, Jiaqiao, LONG, Yu, ZHANG, Kangkang

54: SAND SIFTER FOR CONSTRUCTION ENGINEERING

00: -

The invention relates to the technical field of sand sifter, in particular to a circulating sand sifter for building engineering. The sand sifter includes a body, an inner cavity, a feeding cover and a discharging cover. A feeding cover is arranged in the out left wall of the body, , a discharging cover is arranged in the left middle of the outside of the body, a screening structure is arranged inside the body. A collecting plate is arranged on the lower part of the primary screen net, the collecting plate is arranged on the inner middle side wall of the body, and an inlet correspond to the primary screen net is opened on the left side wall of the body. An outlet corresponding to a collecting plate is opened in the middle of the left side wall of the body. A roller is arranged inside the body, and a roller cover is arranged outside the primary screen and the collecting plate. The invention is convenient for fully circulating and screening sand and stone. The operation becomes more convenient and efficient, and is convenient to move, and makes use more convenient and efficient.

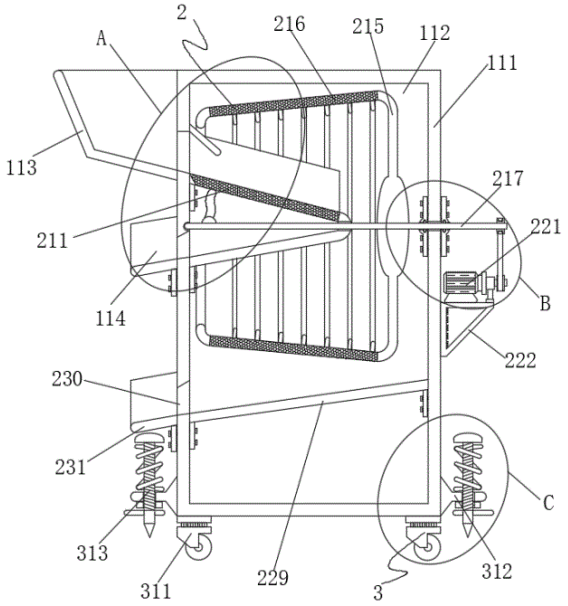

21: 2023/02655. 22: 2023/02/27. 43: 2023/05/16
51: G06F
71: Dr.P.Amudha, Dr.R.Vidya, V.Rani, V.Rajna, S.C.Subha, R.Subaratinam

72: Dr.P.Amudha, Dr.R.Vidya, V.Rani, V.Rajna, S.C.Subha, R.Subaratinam

54: WIRELESS NANOTECHNOLOGY-BASED SYSTEM AND METHOD FOR DIAGNOSIS OF NEUROLOGICAL AND PHYSIOLOGICAL DISORDERS

00: -

The present invention generally relates to a wireless nanotechnology-based system for the diagnosis of neurological and physiological disorders comprises nanotechnology-based sensors implanted in or attached to a body, capable of detecting various physiological signals such as neural activity, temperature, pressure, and other biological markers; a wireless device in communication with the sensors, capable of collecting and transmitting data to a remote processor for analysis; and a remote processor capable of analyzing the data collected by the sensors and determining the presence of any neurological or physiological disorders, and providing real-time diagnostic information.

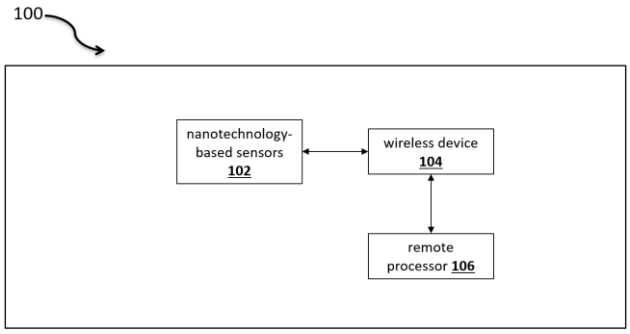

21: 2023/02658. 22: 2023/02/27. 43: 2023/05/16

51: G01N

71: DR. VISHWANATH KARAD MIT -WORLD PEACE UNIVERSITY, SONAWANI, Shilpa

72: SONAWANI, Shilpa

54: SYSTEM FOR AIR POLLUTION PREDICTION FOR NEW AIR QUALITY MONITORING STATION USING CHAINING APPROACH OF TRANSFER LEARNING

00: -

This study proposes an IoT based air quality measurement, warning and prediction system. The proposed system consists of low-cost air quality sensors and ESP32 controller with new generation embedded system architecture. It can detect Air Quality (AQ) parameters like CO, PM2.5, NO2, O3, NH3, temperature, pressure, humidity etc. The system has a novel prediction model, multiheaded CNN-GRU (Convolutional- Gated Recurrent Unit) which can detect next hour pollution concentration. The model uses a Chaining based transfer learning approach for prediction when the system is new and less data available for prediction. Neighboring sites data can be used to transfer knowledge for early predictions for the new system. It can have a mobile based application which can send warning notifications to users if the air quality parameters exceed the specified threshold values. This is all required to take necessary measures against bad air quality predictions. The proposed system contributes significantly with usage of low-cost sensors, open-source advanced technology and performance improvement in RMSE scores at new system in prediction ability. The model can be further improved by learning incrementally in batches which can lead to personalized learning model for the system.

21: 2023/02660. 22: 2023/02/27. 43: 2023/05/16

51: E02B

71: Wajahat Annayat, Dr. Sandeep Samantaray

72: Wajahat Annayat, Dr. Sandeep Samantaray

54: A SYSTEM AND METHOD FOR PREDICTING FLOODS

00: -

The present invention generally relates to a system for predicting floods comprises a network of sensors installed at predetermined locations in a flood-prone area; a central processing unit for receiving and analysing data from the sensors; and analysing the collected data to determine the likelihood of a flood occurring; a database for storing the collected data and the results of the analysis; a communication system for communicating alerts to relevant authorities and the general public; a user interface for accessing and analysing the stored data and for generating reports and visual representations of the data.

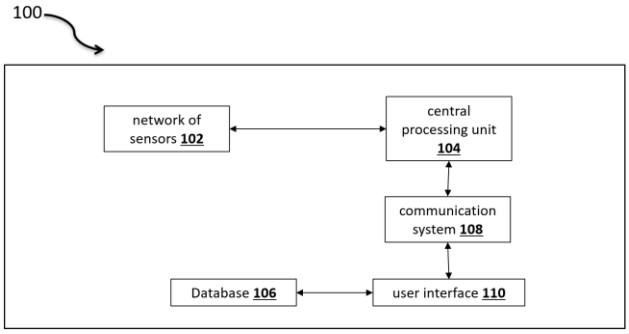

21: 2023/02662. 22: 2023/02/27. 43: 2023/05/16
51: B63H
71: TANDEL, Pranjali Kiran, THOTE, Abhishek Madhukar, DAAS, Smriti Kamlesh, GAJENDRAGADKAR, Akshata Anand, DR. VISHWANATH KARAD MIT -WORLD PEACE UNIVERSITY
72: GAJENDRAGADKAR, Akshata Anand, TANDEL, Pranjali Kiran, THOTE, Abhishek Madhukar, DAAS, Smriti Kamlesh
54: A SOFT ELECTRIC ROBOTIC FISH
00: -
To avoid alarming the aquatic animals during surveillance of aquatic life, Soft Electric Robotic Fish is designed which mimics a Tuna Fish. The Tail of Fish is designed such that it will follow an undulating motion. The designed pectoral fins are helpful for the internal motion of the fish.

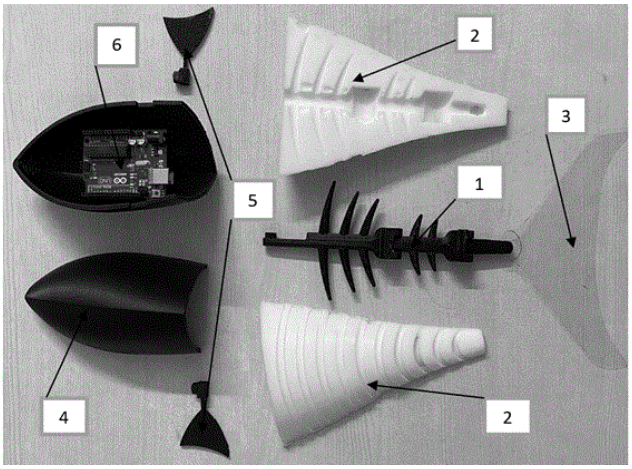

21: 2023/02668. 22: 2023/02/27. 43: 2023/05/16
51: H04L
71: DR. VISHWANATH KARAD MIT -WORLD PEACE UNIVERSITY, PALWE, Sushila Manish, GUNJAL, Anita Shivaji
72: PALWE, Sushila Manish, GUNJAL, Anita Shivaji
54: A SMART SAFETY HANDHELD DEVICE
00: -
Smart Safety Handheld Device is aimed to provide personal safety for individuals of any age and gender. This intelligent system involves two-way safety which works according to mode of operation. In first mode, System detects the troublesome situation and initiates the “Need help” message. In second mode, pre-registered contacts (family members/friends), initiates the system by sending the “Check status” message through remote location. This mechanism helps to recognize (understand) the person in trouble and helps the person to get help by intimating his / her “Need help” message to the near-ones. This safety mechanism involves multiple intelligence techniques to detect the threat scenario, such as image processing and transmission, audio capturing and transmission and biomedical signal processing. With the help of these intelligent techniques, this device became smart to detect the troublesome scenario of the individual and to take the important steps to help the person. Invention is able to handle false alarms with the help of captured audios. With a second-mode initiation option, this invention is helpful for old-age individuals and children who may be missing and unaware of their troublesome situation.

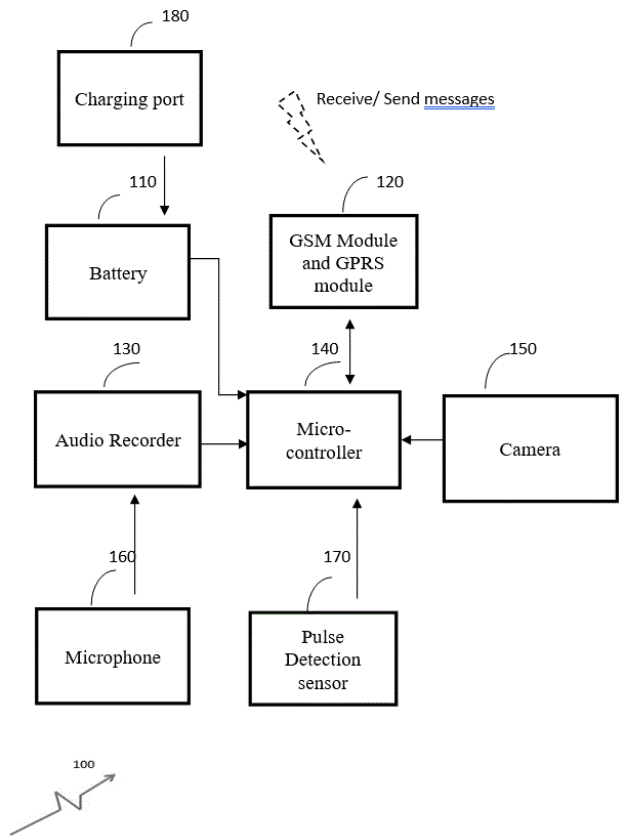

21: 2023/02670. 22: 2023/02/27. 43: 2023/05/16
51: G06K
71: Sudipta Roy, Jayati Mukherjee, Utpal Roy
72: Sudipta Roy, Jayati Mukherjee, Utpal Roy
54: AN AUTOMATIC BENGALI DEGRADED DOCUMENT RECOGNITION SYSTEM
00: -
The system comprises a pre-processor for degrading noises, patches, bleed through, and yellowish background from the input document followed by thresholding and applying a skew correction Hough transformation; a segmentation processor for segmenting pages of the document into lines and words, wherein a global horizontal projection is applied for line segmentation of degraded document and the word segmentation is performed by an approach based on vertical projection and connected component, wherein a character segmentation is performed with a Multilayer Perceptron (MLP), wherein the skew correction aligns the image, upon rotating the foreground pixels or character pixels are; a training processor for training a deep model based on Convolutional Neural Network (CNN) classifier and a Long Short-Term Memory (LSTM) classifier for character recognition; and a recognition processor for recognizing the characters and symbols upon comparing the segmented characters with a trained data stored in a local dataset.

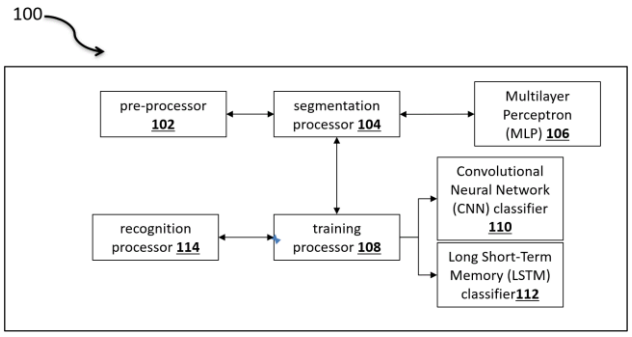

21: 2023/02676. 22: 2023/02/27. 43: 2023/05/10
51: A01G
71: Institute of Highland Forest Science, Chinese Academy of Forestry
72: XU, Fandi, LI, Shuaifeng, HUANG, Xiaobo, SHANG, Ruiguang, SU, Jianrong, CHEN, Yanxuan, ZHANG, Rui
54: MIXED AFFORESTATION METHOD FOR IMPROVING PINUS KESIYA PLANTATION GROWTH
00: -
The present invention relates to a mixed afforestation method for Pinus kesiya plantation growth, which falls within the technical field of forest management. The method includes seedling culture of Pinus kesiya and Alnus nepalensis, determination of a mixed planting mode, cultivation of mixed afforestation seedlings, and tending of cultures in mixed afforestation. The mixed planting mode is determined as cultivating 5 rows of Pinus kesiya and 3 rows of Alnus nepalensis in a strip form successively. In mixed afforestation, Pinus kesiya and Alnus nepalensis trees account for 60-70 percent and 30-40 percent, respectively. The density of mixed afforestation is 1667 plants/hm2, with a plant spacing being 2 m and a row spacing being 3 m. Each afforestation pit has a size of 30 cm × 30 cm × 40 cm in length × width × depth.

21: 2023/02677. 22: 2023/02/27. 43: 2023/05/02
51: G01N
71: CHINA TOBACCO GUANGXI INDUSTRIAL CO., LTD., GUANGXI UNIVERSITY, TOBACCO COMPANY HECHI CITY COMPANY OF GUANGXI ZHUANG AUTONOMOUS REGION

72: WEI, Jianyu, GUO, Zhihong, SHEN, Fangke, HUANG, Weixin, HUANG, Chongjun, JIN, Yabo, ZHANG, Jili, JIA, Haijiang, ZENG, Xiangnan, LIN, Ling, WEI, Zhengyu, WEI, Yumei, LU, Changyou, OU, Zhongsheng, GU, Minghua

54: SAMPLE LIQUID PURIFICATION TREATMENT METHOD FOR DETECTING SQUALENE CONTAINED IN CIGARETTE SMOKE BY HIGH PERFORMANCE LIQUID CHROMATOGRAPHY

00: -

The present invention discloses a sample liquid purification treatment method for detecting squalene contained in cigarette smoke by a high performance liquid chromatography, the method features good resolution of chromatographic peaks, and has the advantages of accuracy, rapidity, high sensitivity, good reproducibility, high recovery rate and the like, thus meeting not only qualitative requirements, but also quantitative requirements.

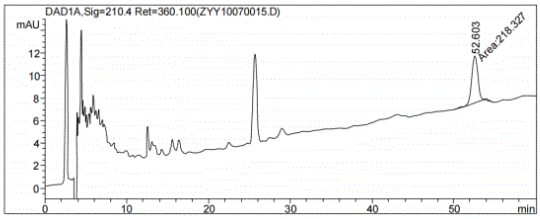

21: 2023/02678. 22: 2023/02/27. 43: 2023/05/02

51: G01N

71: CHINA TOBACCO GUANGXI INDUSTRIAL CO., LTD., GUANGXI UNIVERSITY, TOBACCO COMPANY HECHI CITY COMPANY OF GUANGXI ZHUANG AUTONOMOUS REGION

72: JIN, Yabo, HUANG, Weixin, GUO, Zhihong, SHEN, Fangke, WEI, Jianyu, HUANG, Chongjun, JIA, Haijiang, ZHANG, Jili, WEI, Zhengyu, WEI, Yumei, WEI, Dayue, WU, Guoduan, LI, Shiyong, WU, Zhenhua, GU, Minghua

54: METHOD FOR DETECTING SQUALENE CONTAINED IN CIGARETTE SMOKE BASED ON HIGH PERFORMANCE LIQUID CHROMATOGRAPHY

00: -

The present invention discloses a sample liquid preparation method for detecting squalene contained in cigarette smoke based on a high performance liquid chromatography, the method features good resolution of chromatographic peaks, and has the advantages of accuracy, rapidity, high sensitivity, good reproducibility, high recovery rate and the like, thus meeting not only qualitative requirements, but also quantitative requirements.

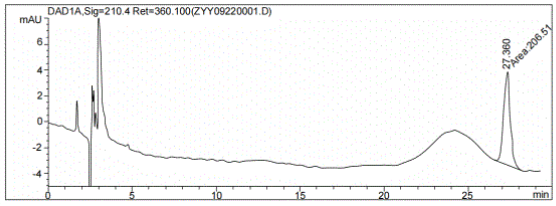

21: 2023/02679. 22: 2023/02/27. 43: 2023/05/02

51: G01N

71: CHINA TOBACCO GUANGXI INDUSTRIAL CO., LTD., GUANGXI UNIVERSITY, TOBACCO COMPANY HECHI CITY COMPANY OF GUANGXI ZHUANG AUTONOMOUS REGION

72: HUANG, Chongjun, SHEN, Fangke, GUO, Zhihong, WEI, Jianyu, JIN, Yabo, ZHANG, Jili, JIA, Haijiang, LONG, Xiaotong, XIE, Bingyue, WEI, Zhengyu, WEI, Yumei, LU, Changyou, OU, Zhongsheng, SUN, Jiansheng, GU, Minghua

54: SAMPLE PRETREATMENT METHOD FOR DETECTING SQUALENE CONTAINED IN CIGARETTE SMOKE

00: -

The present invention discloses a sample pretreatment method for detecting squalene contained in cigarette smoke, a high performance liquid chromatography detects squalene contained in cigarette smoke, featuring good resolution of chromatographic peaks, and has the advantages of accuracy, rapidity, high sensitivity, good reproducibility, high recovery rate and the like.

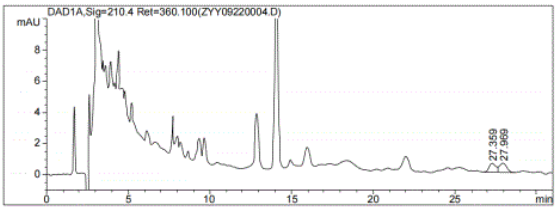

21: 2023/02680. 22: 2023/02/27. 43: 2023/05/02

51: G01N

71: CHINA TOBACCO GUANGXI INDUSTRIAL CO., LTD., GUANGXI UNIVERSITY

72: ZHANG, Jili, HUANG, Weixin, SHEN, Fangke, GUO, Zhihong, WEI, Jianyu, HUANG, Chongjun, JIN,Yabo, JIA,Haijiang, LI,Junlin, LONG,Xiaotong, HE, Yuanlan, HE, Mingxiong, CHENG, Yi, GU, Minghua, XIE,Bingyue, LIN, Ling

54: SAMPLE LIQUID PREPARATION METHOD FOR DETECTING SQUALENE CONTAINED IN

CIGARETTE SMOKE BASED ON HIGH PERFORMANCE LIQUID CHROMATOGRAPHY
00: -
The present invention discloses a sample liquid preparation method for detecting squalene contained in cigarette smoke based on a high performance liquid chromatography, the high performance liquid chromatography detects squalene contained in cigarette smoke, featuring good resolution of chromatographic peaks, and has the advantages of accuracy, rapidity, high sensitivity, good reproducibility, high recovery rate and the like, thus meeting not only qualitative requirements, but also quantitative requirements.

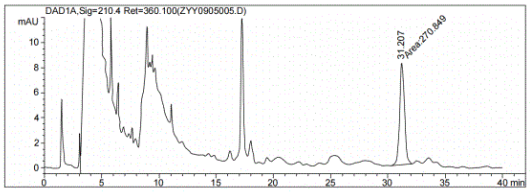

21: 2023/02681. 22: 2023/02/27. 43: 2023/05/02
51: G01N
71: CHINA TOBACCO GUANGXI INDUSTRIAL CO., LTD., GUANGXI UNIVERSITY, TOBACCO COMPANY HECHI CITY COMPANY OF GUANGXI ZHUANG AUTONOMOUS REGION
72: JIA, Haijiang, XU, Xueqin, HUANG, Weixin, SHEN, Fangke, GUO, Zhihong, WEI, Jianyu, JIN, Yabo, HUANG, Chongjun, ZHANG, Jili, LI, Junlin, LIN, Ling, WEI, Dayue, WU, Guoduan, LI, Shiyong, WU, Zhenhua, GU, Minghua
54: METHOD FOR TOBACCO LEAF STYLE SIMILARITY CLASSIFICATION BASED ON NEAR-INFRARED SPECTRAL FEATURES
00: -
The present invention provides a method for tobacco leaf style similarity classification based on near-infrared spectral features, which can identify the style similarity of tobacco leaves in a fast and accurate manner, and the method features simple in operation, easy to operate, environment-friendly and pollution-free.

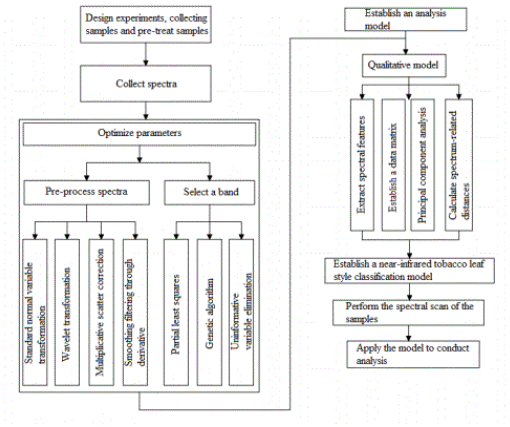

21: 2023/02682. 22: 2023/02/27. 43: 2023/05/03
51: C05F
71: Branch of Animal Husbandry and Veterinary, Heilongjiang Academy of Agricultural Sciences
72: DING, Xinying, WANG, Junqiang, ZHANG, Shufen, FU, Long, MA, Shanshan, WANG, Zhen, HAN, Yongsheng, SUN, Fang, DING, Deli, XU, Yanxia, LI, Ping, HUANG, Xinyu, HAN, Yehui, ZHOU, Chao, XU, Ting
54: LIVESTOCK MANURE TREATMENT SYSTEM
00: -
The present invention discloses a livestock manure treatment system and relates to the technical field of manure treatment devices. The livestock manure treatment system includes a drying and storage box. A box door is provided on a side wall of the drying and storage box. A separation and crushing structure is provided above the drying and storage box. A drying assembly is provided on a side of the drying and storage box. The drying assembly is in communication with the drying and storage box and the separation and crushing structure. In the present invention, a preliminary dry-wet separation is performed on livestock manure using a dry-wet separator, then the livestock manure by the dry-wet separation is crushed and fully fermented with zymophyte, and then the fully fermented livestock manure is dried by the drying assembly so that biological fertilizer particles are made.

(Figure 1)

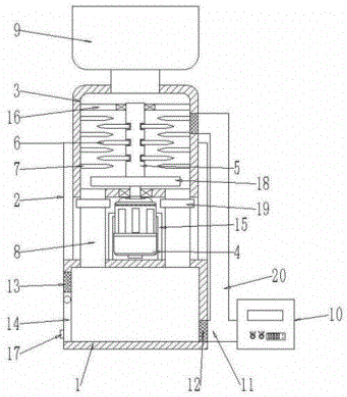

21: 2023/02685. 22: 2023/02/27. 43: 2023/05/11
51: C08B
71: China Agricultural University
72: WU, Yi, ZHANG, Mingrui, MO, Ruixia, WANG, Haotian, LIU, Tianyi, LIU, Pan
54: MULBERRY POLYSACCHAROSE IRON SUPPLEMENT FOR PETS AND PREPARATION METHOD THEREFOR AND APPLICATION THEREOF
00: -
The present invention provides a mulberry polysaccharide iron supplement for pets and a preparation method therefor and an application thereof. The mulberry polysaccharide iron supplement for pets features good iron supplementation effect. It is conducive to playing a role of supplementing iron due to higher absorptivity of the mulberry polysaccharide iron supplement for pets. The mulberry polysaccharide iron supplement for pets is beneficial to iron supplementation of the pets and has a wide development prospect.

21: 2023/02686. 22: 2023/02/27. 43: 2023/05/12
51: C02F
71: Shandong Jianzhu University, Jianda Ecological Environment Innovation Center of Nanxun District, Huzhou City
72: Yang SONG, Feiyong CHEN, Yubo ZHAO, Shuying LI, Bangsong SHENG, Jiaze LI, Tongya TIAN, Rupeng LIU, Meng LI, Minghui HU, Wenmei ZHAO
33: CN 31: 2022108252895 32: 2022-07-14
54: A SYSTEM AND A METHOD FOR PROMOTING SEAWATER EVAPORATION TO PRODUCE SALT BY PHOTOELECTRIC THERMAL LINKAGE
00: -
This invention discloses a system and a method for promoting seawater evaporation to produce salt by photoelectric thermal linkage, the system includes a solar collector tube, a steam generator, a heat exchange tube, a condenser, and a reflux pump; the outlet of the solar collector tube is connected to the steam generator. The steam outlet of the steam generator is connected to the inlet of the heat exchange tube through the condenser. The heat exchange tube is coiled in the salt field. The outlet of the heat exchange tube is connected to the inlet of the solar collector tube through the reflux pump. The steam generator provides electricity for the reflux pump. The system in the invention can not only realize power generation but also provide waste heat for seawater evaporation to produce salt, which reduces energy consumption and accelerates seawater evaporation to produce salt.

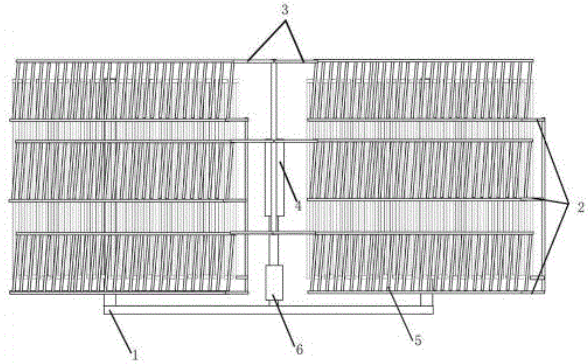

21: 2023/02687. 22: 2023/02/27. 43: 2023/05/12
51: B01D
71: Shandong Jianzhu University, Jianda Ecological Environment Innovation Center of Nanxun District, Huzhou City
72: Yang SONG, Zhigang YANG, Tongya TIAN, Feiyong CHEN, Jie HU, Jiaze LI, Guiqin ZHANG
33: CN 31: 2022109693185 32: 2022-08-12
54: A FLUE GAS REDUCTION DENITRATION DEVICE AND METHOD COUPLING SNCR AND SCR
00: -
The invention discloses a flue gas reduction and denitrification device and method coupling SNCR and SCR, including a kiln body. The kiln body is provided with an internal combustion zone and a heat storage function zone. The heat storage function zone is symmetrically arranged on both sides of the internal combustion zone. The internal

combustion zone and the heat storage function zone are separated by an isolation wall, and a round air hole is arranged on the isolation wall. The heat storage function zone is divided into a high-temperature heat storage zone and a low-temperature heat storage zone. Among them, the SNCR denitration structure is set in a high-temperature heat storage zone, and the SCR denitration structure is set in a low-temperature heat storage zone. By improving the structure of the kiln body, the SNCR denitrification structure and the SCR destocking structure are set in the heat storage function area of the kiln body, so that the flue gas generated by the combustion of the regenerative combustion kiln is directly denitrified inside the kiln, and the final denitrification efficiency of the flue gas can reach more than 90%.

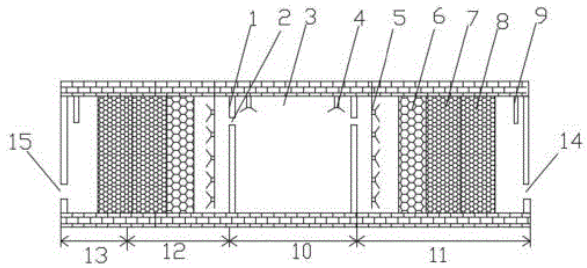

21: 2023/02688. 22: 2023/02/27. 43: 2023/05/12
51: F26B
71: Shandong Jianzhu University, Jianda Ecological Environment Innovation Center of Nanxun District, Huzhou City
72: Yang SONG, Zhanguo ZHANG, Feiyong CHEN, Jiaze LI, Xianglong ZHAO, Tao FENG
33: CN 31: 2022109908492 32: 2022-08-18
54: THE DEVICE AND THE METHOD OF A SOLAR-ENHANCED TWO-DIMENSIONAL FLUIDIZED BED FOR DRYING MATERIALS
00: -
The invention relates to the field of solar energy utilization, in particular to the device and the method of a solar-enhanced two-dimensional fluidized bed for drying materials, including A two-dimensional fluidized bed and pulleys, the pulleys are installed on the two-dimensional fluidized bed through the bottom support frame; An feeding and discharging component is installed on the two-dimensional fluidized bed. A heat-absorbing component is arranged on the two-dimensional fluidized bed. And at least one set of reflective components is installed on both sides of the two-dimensional fluidized bed. The reflective component includes an arc solar reflector, supporting rods, and an angle timing regulator. The supporting rod is provided in several sets. The arc solar reflector is installed on the ground through the supporting rods, and the supporting rods are also provided with an angle timing regulator for adjusting the working angle of the arc solar reflector. The arc of the arc solar reflector is 30°-40°. The invention reuses solar energy, combines solar energy with the two-dimensional fluidized bed, and reduces the cost and time of drying materials, thereby improving processing efficiency.

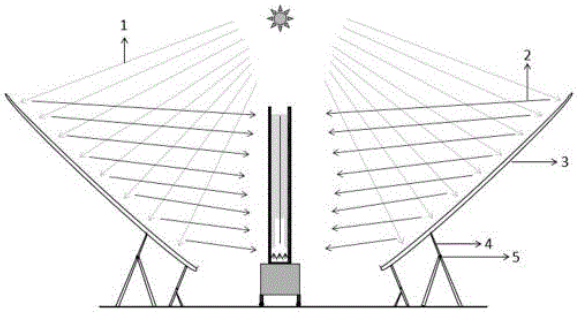

21: 2023/02689. 22: 2023/02/27. 43: 2023/05/02
51: B09B
71: Shandong Jianzhu University, Jianda Ecological Environment Innovation Center of Nanxun District, Huzhou City
72: Yang SONG, Bangsong SHENG, Yuanyuan SU, Yufeng DU, Feiyong CHEN, Jie HU, Xianglong ZHAO, Jiaze LI, Bo WANG, Minghui HU, Wenmei ZHAO
33: CN 31: 2022110396283 32: 2022-08-29
54: A TREATMENT SYSTEM FOR SAWDUST WASTE RESOURCE UTILIZATION
00: -
The invention relates to the technical field of sawdust waste utilization, a treatment system for sawdust waste resource utilization is provided by including a sawdust pretreatment system, a pyrolysis cooling system, and a product storage system. The sawdust pretreatment system includes a sawdust storage field, a drying furnace, a storage bin, and a supplementary fuel device. The sawdust storage field is connected to the drying furnace and the drying furnace is connected to the storage bin through a conveying assembly. The supplementary fuel device is connected to the pyrolysis cooling

system. The pyrolysis cooling system includes a feeder, a pyrolysis furnace, a discharger, a cooling furnace, a primary cooler, an air cooler, and a freezer. The invention can be used for directional catalytic pyrolysis of sawdust waste to meet the production and environmental protection requirements. The operation is simple, the conditions are suitable, the cost is low and stable production can be realized.

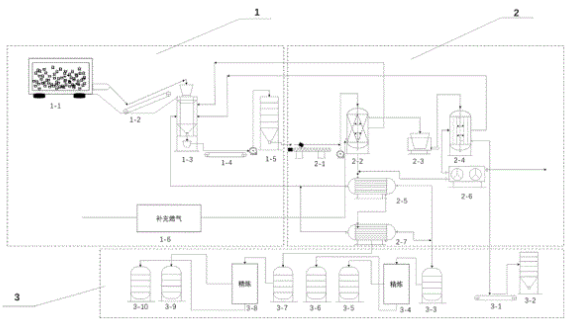

21: 2023/02690. 22: 2023/02/27. 43: 2023/05/02
51: G06F
71: Anhui Polytechnic University
72: Zhen ZHANG, Wenhao WANG, Manman XU, Anheng WANG, Ming FANG
33: CN 31: 202210521243.4 32: 2022-05-13
54: A DESKTOP TACTILE INTERACTIVE DEVICE
00: -
The invention relates to the field of intelligent interactive sensing devices, in particular to a tabletop tactile interactive device, which comprises a housing, an upper cover arranged on the housing, a mounting base and a fixed block arranged in the housing, and specifically comprises: the reproduction mechanism, which is arranged inside the housing, can present the partial appearance of the virtual object at the index finger tip; Stiffness adjusting mechanism, which is arranged inside the housing and at the bottom of the reproduction mechanism, is used to provide different rigidity when the index finger presses the reproduction mechanism; The electronic control module is installed inside the housing and cooperates with the reproduction mechanism to connect with the computer to transmit signals and control the operation of the device. Through the driving steering gear with single degree of freedom and a local height reproduction structure, the driving steering gear provides the stiffness information of the contact point of the virtual object felt by the fingers, and the local height reproduction structure is used to reproduce the local external surface information of the virtual object at the contact point.

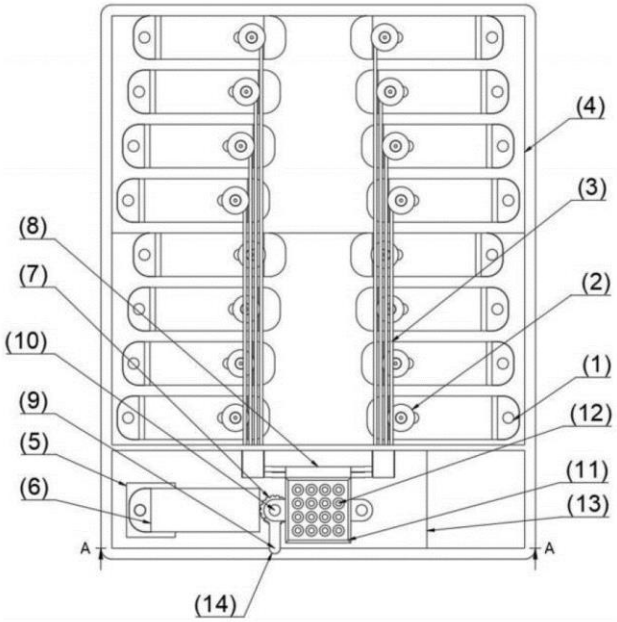

21: 2023/02691. 22: 2023/02/27. 43: 2023/05/03
51: A23L
71: ZHAOQING UNIVERSITY
72: GUO Yanjun, JI Qianhua, GUO Liying
54: CITRUS CYSTS FOR THE SOLID DRINK AND ITS PREPARATION METHOD
00: -
The invention discloses a citrus cysts for the solid drink and a preparation method thereof. The method for preparing citrus cysts for the solid drink, which comprises the following steps: (1) Peeling the peel and the outer membrane of the capsule of the citrus fruit to obtain the citrus cysts; (2) Putting the citrus cysts obtained in step (1) under normal pressure and hot air drying, drying the citrus cysts to a moisture content of 8%-12%, and then sterilizing at 80 degrees Celsius for 1 min; the hot air drying conditions are as follows: at a temperature of 50-80 degrees Celsius, and a wind speed of 0.4-2m/s. The dried citrus cysts prepared by the method of the invention has a good rehydration ratio, and the method maintains the integrity of the cysts, while retaining the nutrients in the cysts. Therefore, it can be further made into a solid drink containing citrus cysts. The invention also provides a solid drink, which contains the dried citrus cysts and basic

ingredients (crystalline fructose, citric acid, beta-Carotene, etc.), the solid drink has the characteristics of easy brewing, convenient drinking and convenient carrying.

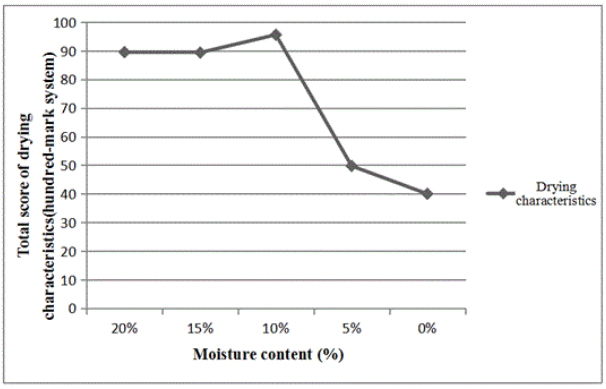

21: 2023/02692. 22: 2023/02/27. 43: 2023/05/03
51: C02F
71: Shantou Polytechnic
72: CHEN Qi, WANG Shen
54: TREATMENT SYSTEM FOR DEGRADING ANTIBIOTICS IN WASTEWATER
00: -
The invention discloses a treatment system for degrading antibiotics in wastewater, which comprises a precipitation water tank, a gas-liquid mixing device and a degradation reaction device, where the bottom end of the precipitation water tank is provided with a transverse sliding rod side by side, the outer peripheral surface of the transverse sliding rod is sleeved with a scraper, the center of one side surface of the scraper is connected with a pumping rod, the bottom end of the precipitation water tank is provided with a dirty tank, plasma is arranged in the gas-liquid mixing device, and the top end of the gas-liquid mixing device is provided with a water inlet, an air inlet and a feeding port, and the water inlet and the precipitation water tank are connected through a water delivery pipeline. According to the invention, the bottom end of the precipitation water tank can be cleaned by arranging the scraper, so that flocculated impurities in the wastewater can be prevented from accumulating inside and cannot be cleaned; and different gases can be selectively added according to the types of antibiotics contained in the wastewater through the gas-liquid mixing device, and the wastewater can be preliminarily treated by matching with isoelectric ions.

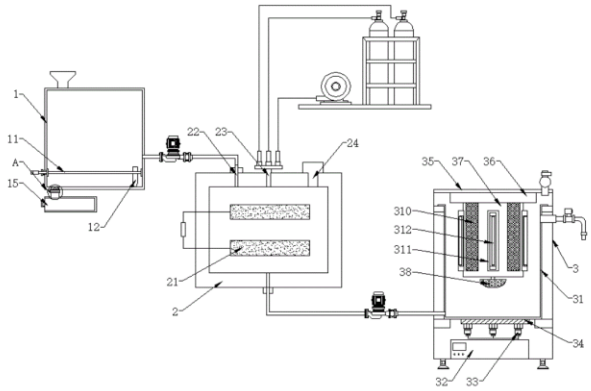

21: 2023/02693. 22: 2023/02/27. 43: 2023/05/03
51: A01G
71: Inner Mongolia Minzu University
72: HONG Yan, XIN Ying, ZHANG Suyalatu, LA Xinamujila, YANG Lingzhen
54: METHOD FOR QUICKLY BREAKING DORMANCY OF RADIX GLEHNIAE SEEDS
00: -
The invention discloses a method for quickly breaking dormancy of radix glehniae seeds, belonging to the technical field of Chinese medicinal materials. According to the invention, the seeds of radix glehniae are soaked in water, and then soaked in 0.5% permanganate solution after being fished out, so that some endogenous inhibitors are effectively disinfected and eliminated, and the germination ability of the seeds is improved; and then, the disinfected seeds are washed with water and drained, and the drained seeds are put in a white box and placed in a stratification box for bare stratification treatment, and the seeds are turned over every day, and rotten and moldy bad seeds are picked out, so that the dormancy of radix glehniae seeds can be quickly broken, and the breaking of seeds can be further shortened. In addition, the method for breaking the dormancy of radix glehniae seeds provided by the invention can also reduce the mildew rate and rot rate of seeds, and has the advantages of simple operation, low cost, environmental friendliness and high practicability and popularization value.

21: 2023/02694. 22: 2023/02/27. 43: 2023/05/03
51: C04B
71: Jilin Jianzhu University
72: MA Lijun, XU Lu, ZHANG Yunlong, WANG Jing, QIAN Xuesong, GAO Chunmei, ZHANG Huzhu, ZENG Xiaofeng, SUN Meng

54: ENVIRONMENT-FRIENDLY SELF-SENSING CONCRETE AND PREPARATION METHOD THEREOF

00: -

The invention discloses a novel environment-friendly concrete: glass sand engineering cement-based composite material and a preparation method thereof, and belongs to the technical field of concrete. The raw materials of Engineered Cementitious Composite (ECC) are cement, fly ash, glass sand, carbon black, polypropylene fiber, water and water reducer. The specific test method is to pour dry materials such as cement, fly ash and glass sand into a blender and stir them. Then, after carbon black is fully blended with the blender, polypropylene fiber is added. After the fiber is dispersed, water and the water reducer are added and stirred until it flows into a creamy shape, and then casting maintenance is carried out. In the invention, carbon black is added on the basis of the original ordinary concrete, so that the electrical conductivity of the concrete is increased, and it is used for sensing the internal damage of the concrete, instead of the traditional sensor, so that the self-sensing of the concrete is realized; meanwhile, glass sand is used in the self-sensing concrete to replace the original machine-made sand, and fly ash replaces part of cement, so that the environmental pollution is reduced, the secondary use of glass is increased, which is beneficial to the sustainable development of the construction industry. In addition, compared with ordinary concrete, the use of ECC concrete greatly increases the toughness and workability of concrete.

21: 2023/02695. 22: 2023/02/27. 43: 2023/05/03
51: A01C
71: ZHAOQING UNIVERSITY
72: GUO Yanjun, JI Qianhua, GUO Liying

54: SEED PRESERVATION METHOD CAPABLE OF STORING SEEDS ALL YEAR ROUND AND HAVING HIGH GERMINATION RATE

00: -

Disclosed is a seed preservation method capable of storing seeds all year round and having high germination rate. The method includes the following steps: (1) adding sodium alginate into water, and then heating and stirring uniformly under the condition of water bath to obtain gelatinized sodium alginate; (2) adding a bactericide into the gelatinized sodium alginate and uniformly stirring to obtain a mixed solution I of the sodium alginate and the bactericide; (3) adding potassium salt type polymer water-absorbent resin into the mixed solution I, and uniformly stirring to obtain mixed solution II; (4) dropping the mixed solution II into the CaCl2 solution, soaking the mixed solution II in the CaCl2 solution after dropping, and placing still to obtain the compound preservative for citrus rootstock seeds. The preservative obtained in the invention, combined with low-temperature storage, may enable the citrus rootstock seeds to be stored all year round, and maintain high germination rate and low mildew rate, thus achieving the purpose of providing citrus rootstock seeds and breeding citrus rootstock seedlings all year round.

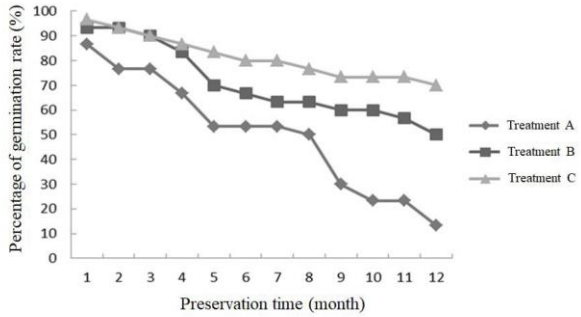

21: 2023/02696. 22: 2023/02/27. 43: 2023/05/11
51: F24F
71: China Jiliang University
72: JIANG Zhitao, ZHU Chenlin, WANG Chen, ZHOU Fang

54: FIN-COLUMN HIGH-EFFICIENT RADIATOR AND HIGH-EFFICIENT JET LIQUID COOLING CABINET

00: -

A fin-column high-efficient radiator comprises a substrate, wherein the substrate comprises a heat source contact surface and a heat dissipation surface; the fin column part is distribute on that surface of the heat radiating surface of the substrate, and is characterize in that the fin column part comprises a groove, and the groove angle alpha formed by the central line of the groove and the horizontal line ranges from 0 to 180 degree. According to the radiator provided by the invention, slots are formed at the fin column parts, so that the heat dissipation area is increased, and the flow resistance is reduced, thereby improving the heat dissipation effect.

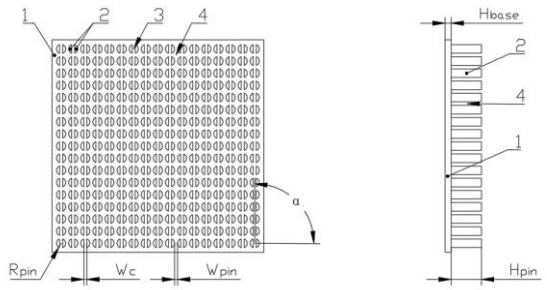

21: 2023/02697. 22: 2023/02/27. 43: 2023/05/11
51: C08L
71: WEIFANG UNIVERSITY
72: KONG Xiangjun, WANG Xia, ZENG Wulan, ZHANG Yongfang
54: CATIONIC EMULSIFIED ASPHALT AND PREPARATION METHOD THEREOF
00: -
The invention relates to a cationic emulsified asphalt and its preparation method, mainly prepared from ordinary asphalt, emulsifier, modifier and water. Each raw material is composed of the following components by weight percentage: asphalt 53-70 percent, emulsifier 0.8-3.0 percent, modifier 3.0-5.0 percent, calcium chloride 5.0-10.0 percent, and water. The innovation of the invention is that the bifunctional asphalt emulsifier used in the production of cationic emulsified asphalt; it is prepared with organic polyamines and organic acids as raw materials to prepare basic components, and then reacts with basic components, acid components and organic aldehydes with molar ratio of 1:1-1.3:1-1.3. Its molecular structure contains multiple adsorption centers, which can form an adsorption protective film on the metal surface, and has the functions of emulsification and corrosion inhibition. The emulsified asphalt has low corrosivity in the process of preparation, and may greatly reduce the potential corrosion hazard in the process of emulsification, storage and transportation without adding corrosion inhibitor. Emulsified asphalt has simple production process, wide source of raw materials and good performance, which may be used for micro-surfacing and slurry seal.

21: 2023/02698. 22: 2023/02/27. 43: 2023/05/11
51: A01G; C12N
71: Gansu Agricultural University
72: SU Junji, WANG Caixiang, YUAN Wenmin, LI Meili, WANG Yujiao, WEI Wei, LIU Juanjuan
54: A DROUGHT-RESISTANT AND SALT-TOLERANT UPLAND COTTON GENE AND ITS APPLICATION
00: -
The invention discloses a drought-resistant and salt-tolerant upland cotton gene and its application, belonging to the technical field of genetic engineering. The nucleotide sequence of the gene is shown in SEQ ID NO: 7, and the invention also discloses an application of the GhABC1K12-A07 gene in Gossypium hirsutum L. in improving the drought resistance and salt tolerance of plants. According to the invention, the target gene is silenced in cotton plants by using VIGS technology, and after drought and salt stress treatment, it is found that the target gene can reduce antioxidant enzyme (CAT, POD and SOD) activity, soluble sugar and chlorophyll content, increase MDA content, and reduce the expression of stress-related genes GhSOS1, GhNHX1, GhCBL3, etc., which proves that GhABC1K12-A07 positively regulates the cotton response to drought and salt stress, and provides important genetic resources for high drought resistance and salt tolerance breeding of upland cotton.

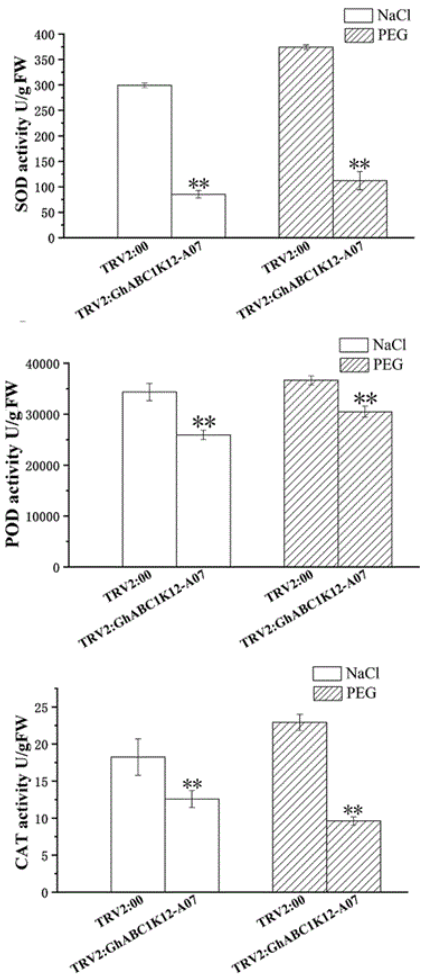

21: 2023/02699. 22: 2023/02/27. 43: 2023/05/11
51: C10B
71: Inner Mongolia University of Technology
72: ZHANG Hongbo, ZHANG Jingkun, LI Guoping, YANG Min

54: METHOD FOR REDUCING OXYGEN-CONTAINING FUNCTIONAL GROUPS ON LOW-RANK COAL SURFACES

00: -

The invention discloses a method for reducing oxygen-containing functional groups on low-rank coal surfaces, which belongs to the technical field of low-rank coal treatment. Na2SO3 solution is used as electrolyte and gamma-FeOOH is used as catalyst to electrolyze low-rank coal slime. Through electrochemical regulation, the catalyst is used to strengthen the reaction process, and the oxygen-containing functional groups on the surface of coal slime particles are reduced through reduction reaction, so that the number of oxygen-containing functional groups on the surface of low-rank coal can be reduced by about 40 percent, and the surface contact angle of low-rank coal particles can be increased from 70 degrees to 80 degrees.

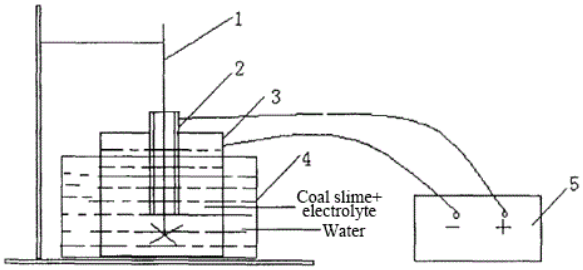

21: 2023/02700. 22: 2023/02/27. 43: 2023/05/11
51: C02F
71: XUZHOU COLLEGE OF INDUSTRIAL TECHNOLOGY
72: ZHANG Ling, SU Xiaoli

54: DISINFECTION DEVICE OF RECLAIMED WATER FOR LANDSCAPE WATER

00: -

The invention discloses a disinfection device of reclaimed water for landscape water, which comprises an aerator, a disinfectant storage rack, a floating plate and a solar panel, wherein a storage battery is installed at one end of the top of the floating plate, a motor is fixed at the middle position of the top of the floating plate, an induced draft fan is installed at the other end of the top of the floating plate, and a medicament tank is installed at the top of the floating plate between the induced draft fan and the motor, and the output end of the induced draft fan is connected with the bottom end of the medicament tank far from the motor through a connecting pipe. The top end of the motor is provided with a solar panel through a rack body, disinfectant tanks are fixed inside the disinfectant storage rack, and one side of the disinfectant storage rack is provided with a rack door. According to the invention, the disinfectant storage rack is installed, and the inner wall of the disinfectant tank is provided with a permeable membrane layer, so that the water body flows, the water body and the disinfectant permeate each other, and the disinfectant is uniformly diffused into the water body, which is convenient for disinfecting sewage and improving water quality.

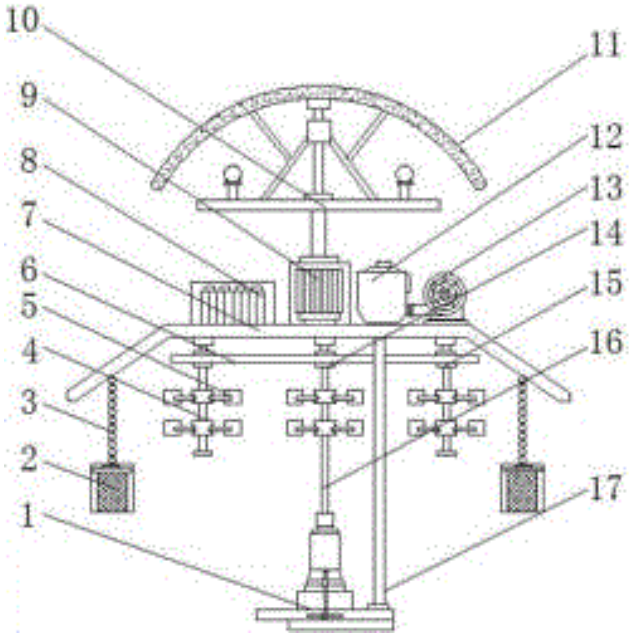

21: 2023/02701. 22: 2023/02/27. 43: 2023/05/11
51: A01G
71: Shandong Institute of Pomology
72: FAN Kun, FU Li, GAO Chuanjie, ZHANG Yaozhong, QU Jianlu, JIN Yan, ZHANG Guofu
54: GROWTH-PROMOTING, PROTECTIVE AND THERAPEUTIC AGENT FOR PREVENTING AND TREATING BRANCH DISEASES
00: -
Disclosed is a growth-promoting, protective and therapeutic agent for preventing and treating branch diseases, including the following components in percentage by mass: 0.5%-5% of tebuconazole, 1%-30% of thiophanate-methyl, 0.5%-1% of salicylic acid, 1%-3% of dispersant, 1%-3% of wetting agent, 1%-4% of antifreeze, 3%-20% of film-forming agent polyvinyl alcohol, 0.1%-2.0% of colorant methyl violet, 0.5%-2% of penetrant, 0.002%-0.008% of plant growth regulator NAA and 0.0002%-0.002% of gibberellin, and 40%-90% of water. The invention overcomes the shortcomings of the existing preparation, such as large residual toxicity, short drug effect period, slow healing, easy recurrence and the like, and is a new medicament with the functions of protection, treatment and growth promotion.

21: 2023/02703. 22: 2023/02/27. 43: 2023/05/11
51: B02C
71: XUZHOU COLLEGE OF INDUSTRIAL TECHNOLOGY
72: GAO Zihui, SU Xiaoli
54: ANTI-RECOVERY BILL SHREDDING PROCESSING DEVICE FOR ACCOUNTING
00: -
The invention relates to the technical field of financial assistance, and discloses an anti-recovery bill shredding processing device for accounting, which comprises a fixed bottom plate, a processing box is installed in the middle of the upper end of the fixed bottom plate, a baffle plate is installed in the processing box, an extrusion cavity is arranged between the baffle plate and the inner bottom end of the processing box, and a shredding cavity is arranged between the baffle plate and the inner top end of the processing box, a shredding shaft is arranged in the shredding cavity, the inside of the shredding shaft is hollow, the upper end of the shredding shaft passes through a water inlet tank fixed in the middle of the upper end of the processing box and is connected with a first gear set, a rotating shaft is installed in the middle of the first gear set, a first crank is installed in the middle of the left end of the rotating shaft, a first sliding sleeve is sleeved in the middle of the first crank, a first connecting rod is installed at the lower end of the first sliding sleeve, a water delivery rod is installed at the lower end of the first connecting rod, and a water delivery plate is installed at the bottom end of the water delivery rod. According to the invention, the bills are soaked, and the soaked bills are extruded at the same time, so that the paper pulp is extruded into a hard block, which is convenient for recycling and dehydration, and the bills cannot be recovered.

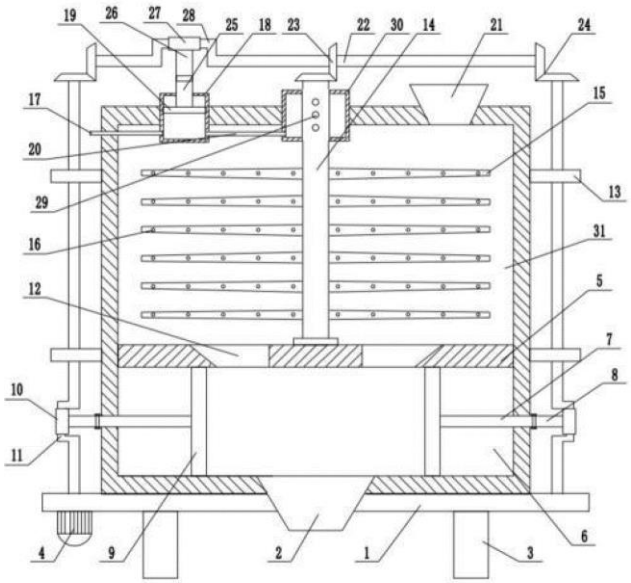

21: 2023/02704. 22: 2023/02/27. 43: 2023/05/10
51: G06F; G06Q
71: Nantong JS Green Energy Co.,Ltd
72: SONG Bing, ZHANG Xingjia, LIU Huibin, YI Zhaohui

54: CALCULATION METHOD OF CARBON EMISSION FOR CONSTRUCTION WASTE TREATMENT

00: -

The invention discloses a calculation method of carbon emission for construction waste treatment, which comprises the following steps: classifying construction waste and obtaining carbon emission factors of various construction waste; obtaining corresponding carbon emission data based on carbon emission factors; based on carbon emission factors and carbon emission data, a carbon emission calculation model is constructed; train the carbon emission calculation model to realize the carbon emission calculation of construction waste treatment. According to the invention, the carbon emission factors of different types of construction waste are obtained by classifying the construction waste, and a carbon emission calculation model is constructed, so that the carbon emission of the construction waste can be calculated more accurately and efficiently.

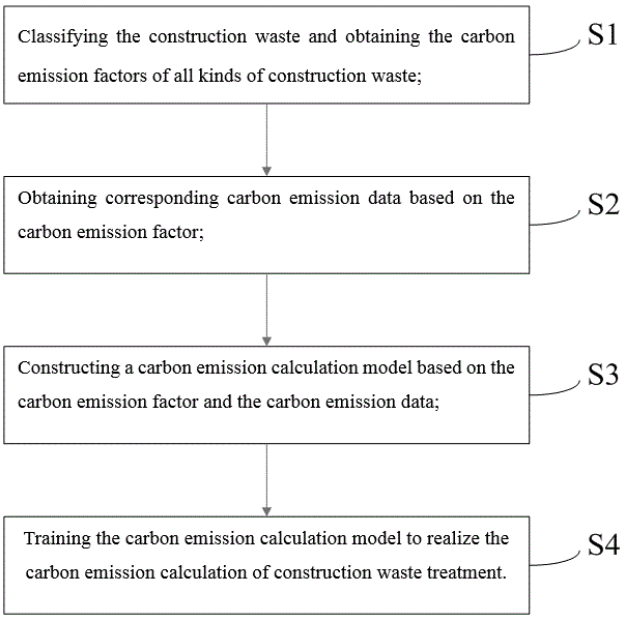

21: 2023/02705. 22: 2023/02/27. 43: 2023/05/10
51: A62C
71: DONG Shuaishuai, Shandong Transportation Research Institute, Shandong University
72: DONG Shuaishuai, ZHANG Yu, WANG Xiaochao, XUE Yuxuan, CHENG Zhiheng, WANG Xiaoyan, HAN Wen, TAO Yuchen

54: INTELLIGENT MONITORING DEVICE AND METHOD FOR FIRE PIPELINE

00: -

The invention discloses an intelligent monitoring device and method for fire pipeline, relating to that technical field of traffic pipeline monitoring, and comprising an electric heat tracing and its control device, and a computer terminal control system; the electric heat tracing and its control device are connected with a computer terminal control system; the electric heat tracing and the its control device detect the temperature and water leakage of the fire hose through distributed optical fibers, and locally heat the fire hose through the electric heat tracing belt; the computer terminal control system is used for remotely controlling the electric heat tracing belt according to the real-time sensed temperature of the fire hose, and giving an early warning based on the monitoring results. According to the invention, the distributed optical fiber and the electric heat tracing are used for the fire hose in the tunnel, the temperature and water leakage of the water pipe are sensed in real time through the distributed optical fiber, and the electric heat tracing is turned on

intelligently, so that the fire hose is prevented from freezing and cracking, the energy consumption is reduced, and the safety effect of the fire hose is improved.

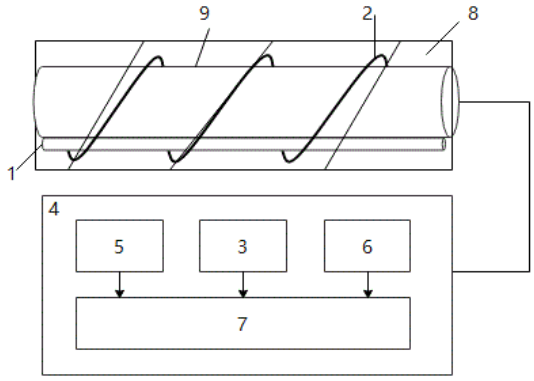

21: 2023/02706. 22: 2023/02/27. 43: 2023/05/10
51: B07C
71: Shanghai Polytechnic University
72: WU Yuxin, QIN Qin, HUANG Qing, ZHANG Jinyu, ZHANG Chenglong, MA En, SONG Xiaolong, WANG Jingwei

54: INTELLIGENT SORTING DEVICE AND METHOD FOR ELECTRONIC COMPONENTS

00: -

The invention discloses an intelligent sorting device and method for electronic components. The device comprises a feeding system, a grabbing system, an identification system, a collecting device and a control system. Wherein, the feeding system is located at the front end to arrange components; the identification system is mounted on the grabbing system to identify the characters and sizes of components; the grabbing system is positioned right above the feeding system to grab components; the collecting device collects the sorted components; the control system converts the collected signals and sends instructions to each movement mechanism. By using the technologies of visual identification, three-dimensional motion control, machine learning and automation, the invention can orderly arrange, accurately identify, quickly grab and finely classify the components of waste mobile phones, and can realize rapid identification and classified recycling of various components of waste mobile phones. The device is simple in structure and high in production efficiency. What has been described above is only the specific implementation of this application. It should be pointed out that for ordinary technicians in this technical field, several improvements and embellishments can be made without departing from the principles of this application, and these improvements and embellishments should also be regarded as the protection scope of this application. It should be noted that in this paper, terms such as "comprising", "including" or any other variation thereof are intended to cover non-exclusive inclusion, so that a process, method, article or equipment including a series of elements includes not only those elements, but also other elements not explicitly listed, or elements inherent to such process, method, article or equipment. Without further restrictions, an element defined by the phrase "including one" does not exclude the existence of other identical elements in the process, method, article or equipment including the element.

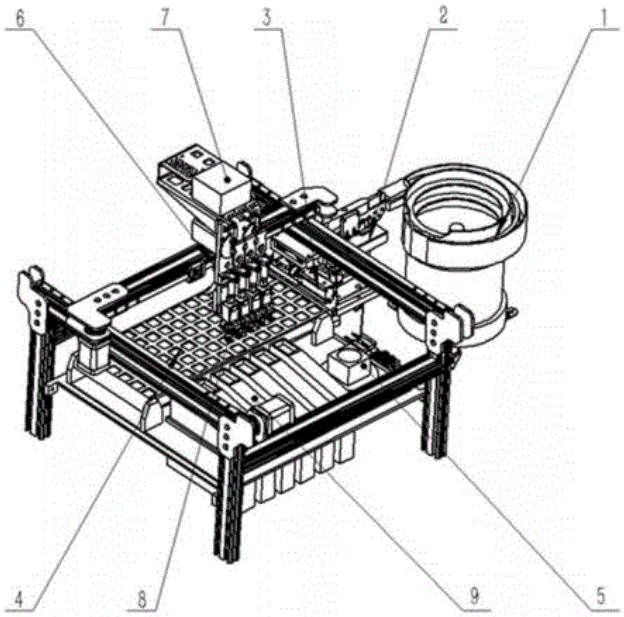

21: 2023/02707. 22: 2023/02/27. 43: 2023/05/10
51: B23K; B25B
71: Shanghai Polytechnic University
72: WU Yuxin, QIN Qin, HUANG Qing, ZHANG Jinyu, ZHANG Xihua, YUAN Wenyi, WANG Lincai

54: DEVICE AND METHOD FOR AUTOMATICALLY DISASSEMBLING CIRCUIT BOARD

00: -

The invention discloses a device and a method for automatically disassembling a circuit board. The system comprises a feeding platform, a fixture, a conveying equipment, an electric heating tunnel kiln

device, a horizontal simple pendulum vibration device, a floating brush sweeping device, a floating brush scraping device, a tail gas collection and purification device, an explosion-proof fire-fighting device and a control system. According to the invention, the waste circuit board is brought into the electric heating tunnel kiln device through the clamp, and under the condition that the waste circuit board is heated to the constant temperature state of solder melting, the horizontal simple pendulum vibration dismantling process of plug-in components, the floating sweeping process of SMD components by the floating brush sweeping device and the floating scraping process of solder by the floating brush scraping device are sequentially carried out through the horizontal simple pendulum vibration device, so that the components and solder are completely separated from the substrate. The system of the invention has the advantages of high degree of automation, high disassembly efficiency, environmental friendliness and high safety, and is suitable for desoldering and separating different types of circuit boards, thus avoiding the harm to operators and the environment.

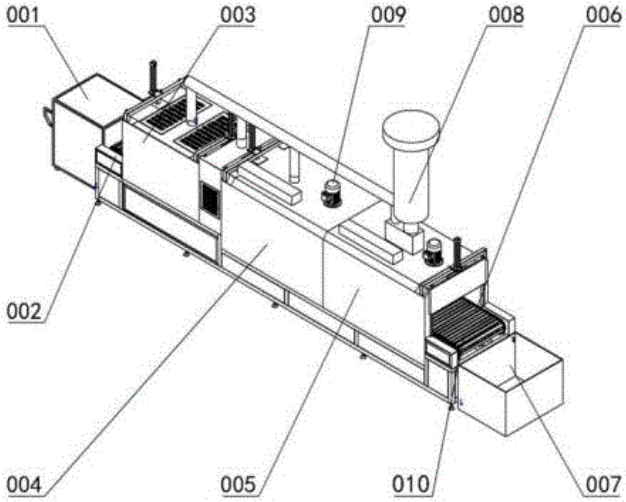

21: 2023/02708. 22: 2023/02/27. 43: 2023/05/10
51: A61K
71: SUN YAT-SEN UNIVERSITY, The First Affiliated Hospital,Sun Yat-sen University
72: CHEN Hongbo, SHI Peilin, CHENG Fang, LIU Longshan, WANG Changxi, BI Zirong
54: APPLICATION OF RRNA SYNTHESIS INHIBITOR IN TREATING NEPHROTOXICITY
00: -

The invention discloses application of an rRNA synthesis inhibitor in treating nephrotoxicity. The research of the invention shows that CX-5461 can obviously reduce the occurrence of renal toxicity of renal transplantation, prolong the survival time of rats, and obviously prolong the long-term survival rate of rats after renal transplantation, indicating that CX-5461 can be used as a new immunosuppressant to treat renal transplantation immune rejection, especially acute rejection after renal transplantation.

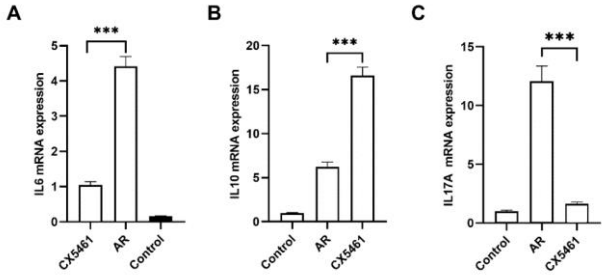

21: 2023/02709. 22: 2023/02/27. 43: 2023/05/10
51: A01K
71: Shanghai Ocean University
72: LI Jun, CHEN Leilei, HU Qingsong, HUANG Kecheng, JIANG Bo
54: VIBRATING BAITING BOAT FOR SHRIMP AND CRAB PONDS
00: -

The invention discloses a vibrating baiting boat for shrimp and crab ponds, which comprises a hull, which comprises two hull units arranged in parallel, and the two hull units are fixedly connected through a connecting unit; an elastic support unit for fixing the upper surface of the hull; a material box which is installed on the elastic support unit, and a vibration unit is arranged in the material box, and the elastic support unit can elastically support the material box, and the vibration unit can generate vibration to control baits in the material box to be discharged; and a throwing tray unit which is connected to the outlet of the material box, and can throw bait at the outlet of the material box. According to the invention, the blanking amount is uniform and controllable, and the bait can be evenly sprinkled within a preset range by matching with the throwing tray unit; meanwhile, the invention also has the advantages of simple structure, more convenient manufacture and maintenance and the like.

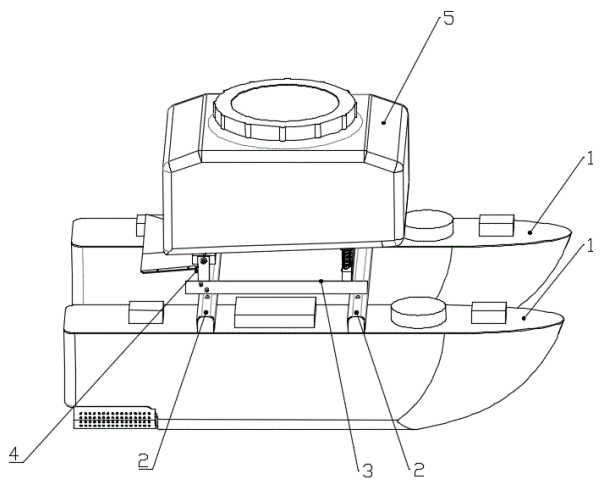

21: 2023/02710. 22: 2023/02/27. 43: 2023/05/10
51: A23L
71: Hunan University of Humanities, Science and Technology
72: LIU Zefa, WANG Ya'nan, LI Peiying, JIANG Yanfang
54: PURE NATURAL HEALTH BEVERAGE AND PREPARATION METHOD THEREOF
00: -
The invention relates to the field of health beverage processing, in particular to a pure natural health beverage and a preparation method thereof. The beverage is made from Polygonatum odoratum and Stevia rebaudiana by rinsing, soaking, chopping, extracting and filtering to obtain a mixed extractive solution of Polygonatum odoratum and Stevia rebaudiana, and then adding the extractive solutions of jujuba seeds, the extractive solution of mint and honey; 680-820 parts of mixed extractive solution of Polygonatum odoratum and Stevia rebaudiana, 60-100 parts of jujuba seed extractive solution, 10-20 parts of mint extractive solution and 1-30 parts of honey. The beverage has the functions of clearing brain, calming nerves, lowering blood pressure and lipid, moistening lung, promoting fluid production, softening blood vessels, preventing and treating diabetes, relieving fatigue and enhancing human immunity, and is a pure natural low-sugar plant beverage without additives, so the invention realizes efficient utilization of Polygonatum odoratum and Stevia rebaudiana resources and solves the problem that pure natural low-sugar plant beverages without food additives are scarce in the market.

21: 2023/02712. 22: 2023/02/27. 43: 2023/05/10
51: A01K
71: Shanghai Ocean University
72: CHEN Leilei, MA Tianli, HU Qingsong, LI Jun, CHEN Yanlin
54: INTELLIGENT SHIP MONITORING CONTROL METHOD FOR POND CULTURE
00: -
The invention discloses an intelligent ship monitoring control method for pond culture, which comprises the following steps: installing a plurality of distance sensors on a ship, and forming an installation angle among the distance sensors; a plurality of sensors respectively send out signals, the distances between the sensors and the shores adjacent to the sensors are calculated according to the propagation speed and time of the signals in the medium, and the distances are stored in a storage module; inputting that distance data in the storage module into a control module which stores a control algorithm; the control module constructs an attitude triangle according to the input distance, and realizes real-time control of the ship through real-time adjustment of the attitude triangle; installing a water quality monitoring device at the bottom of the ship, and collecting water quality information according to the water quality monitoring device; inputting water quality information into the storage module, and the storage module transmits the water quality information to the user terminal, and based on the water quality information, the user terminal realizes water quality control. The problems of aquatic plants salvage, bait throwing and water quality monitoring in pond culture are solved.

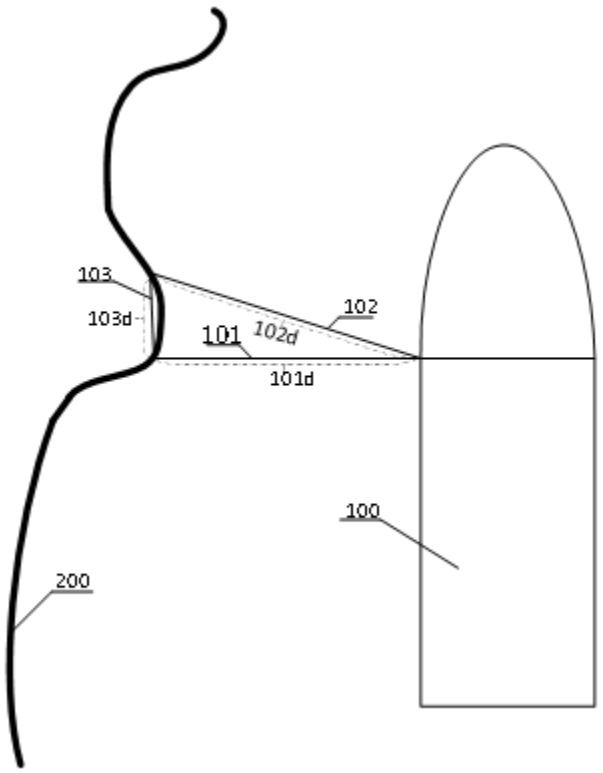

21: 2023/02713. 22: 2023/02/27. 43: 2023/05/10
51: A61K; C12N
71: Inner Mongolia Minzu University
72: ZHAI Jingbo, DANG Sheng, WEN Shubo, WU Dongxing, SONG Yang, GAO Wei
54: SNP SITE FOR IDENTIFYING BRUCELLA SUIS S2 VACCINE STRAIN AND ITS APPLICATION
00: -
The invention relates to an SNP site for identifying Brucella suis S2 vaccine strain and its application, including an SNP (A base) site used to identify Brucella suis S2 vaccine strain, which is located at 290 site in the open reading frame (ORF) of the coding gene of sugar ABC transporter periplasmic sugar-binding protein of Brucella suis. Based on this site, specific probes for Cyclive PCR and Affinity Plus PCR are designed for fluorescence quantitative PCR reaction. The method can quickly and effectively identify the S2 vaccine strain in the brucella infection strain in the clinical sample, and can be used for identifying the infection strain when veterinary practitioners carry out livestock vaccination and identifying the infection or wild virus infection caused by animal S2 vaccine strain inoculation, thereby avoiding the economic loss caused by wrong killing of animals.

21: 2023/02714. 22: 2023/02/27. 43: 2023/05/10
51: G06T
71: Sichuan University of Science & Engineering, CHENGDU-CHONGQING ECONOMIC CIRCLE (LUZHOU) ADVANCED TECHNOLOGY RESEARCH INSTITUTE, Luzhoulaojiao Group Co.,Ltd.
72: ZHOU Junchao, HUANG Shangwu, CHEN Xin, ZHANG Guiyu, TUO Xianguo, HE Yuancheng, TANG Yongqing
54: MACHINE VISION-BASED METHOD FOR IDENTIFYING COOKING DEGREE OF FEN-FLAVOR LIQUOR SORGHUM
00: -
Disclosed is a machine vision-based method for identifying the cooking degree of fen-flavor liquor sorghum, including: collecting cooking images of experimental sorghum, and taking the cooking images of experimental sorghum as sample images; preprocessing the sample images to obtain preprocessed sample images; extracting overall characteristics of the preprocessed sample images; fitting the data of the water content and the overall characteristics to obtain a fitting equation A of the water content and the overall characteristics; fitting the data of the cracking rate and the overall characteristics to obtain a fitting equation B of the cracking rate and the overall characteristics; substituting the overall characteristics of the cooking images of the sorghum to be detected into the fitting equation A to obtain the water content of the sorghum to be detected; substituting the overall characteristics of the cooking images of the sorghum to be detected into the fitting equation B to obtain the cracking rate of the sorghum to be detected; determining the cooking degree of the sorghum to be tested according to the water content and the cracking rate of the sorghum to be tested, and adjusting the cooking process according to the water content and the cracking rate of the sorghum to be tested. The invention accurately judges the cooking degree of sorghum and realizes the online identification and detection of the cooking degree of sorghum.

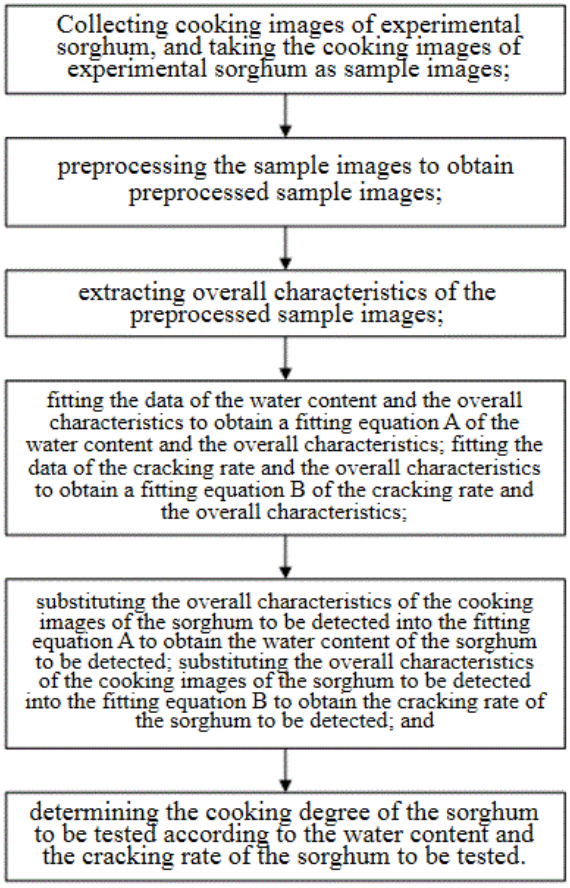

21: 2023/02715. 22: 2023/02/27. 43: 2023/05/10
51: G01N
71: Luzhou Vocational and Technical College
72: LIANG Lijing, FENG Zongyun, DENG Yue, TIAN Dianmei, LIU Jingcheng

54: IDENTIFICATION METHOD OF BREWING CHARACTERISTICS OF HIGHLAND BARLEY VARIETIES

00: -

The invention discloses a method for identifying the brewing characteristics of highland barley varieties, which can be used for evaluating the quality of highland barley Xiaoqu liquor, and belongs to the technical field of highland barley liquor brewing. The method comprises the following steps: determining factors influencing the brewing performance of highland barley, detecting to obtain specific values of each influencing factor to be identified, obtaining the fractional values of each influencing factor and their weight coefficients based on evaluation criteria, and multiplying the fractional values of each influencing factor by their related coefficients to obtain a score value, thereby obtaining the brewing performance grade of highland barley to be identified.

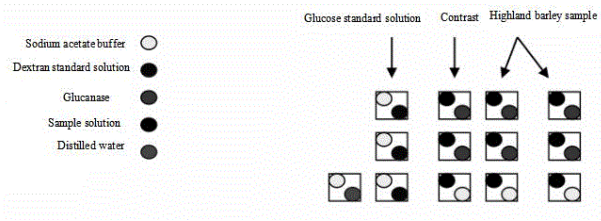

21: 2023/02716. 22: 2023/02/27. 43: 2023/05/10
51: A23B; A23L
71: Sichuan food fermentation industry research and Design Institute Co., Ltd
72: ZHANG Li, BAI Hongmei, CHEN Yimeng, MAO Pengyu, YIN Xiangdong, GAO Lihong, LIU Yu, YOU Jinggang

54: GINGER EXTRACT COMPOUND PRESERVATIVE AND PREPARATION METHOD THEREOF

00: -

The invention belongs to the technical field of food preservation, in particular to a ginger extract compound preservative and a preparation method thereof. The raw materials of the ginger extract compound preservative are: 20-30 parts of ginger, 15-25 parts of anhydrous ethanol, 0.5-1.5 parts of surfactant, 8-12 parts of bovine serum albumin and the rest of water, with a total mass of 100 parts. The ginger extract compound preservative prepared in this application adopts surfactant to assist microwave extraction of ginger extract, and then uses carrier embedding technology to prepare ginger extract-bovine serum albumin compound as preservative. After being treated with preservative, the harvested fruits and vegetables are stored under appropriate conditions, which can significantly improve the storage quality, prolong the shelf life, and effectively solve the problems that fresh fruits and vegetables are perishable and storage-resistant. In addition, the invention also has the advantages of environmental protection, low energy consumption, simple operation and the like.

21: 2023/02717. 22: 2023/02/27. 43: 2023/05/10
51: B01J
71: Shanxi Institute of Science and Technology, Hunan Normal University
72: LI Shiye, TANG Mingqiang, WANG Jie, LIU Zewei, LI Jiao, GUO Ningning

54: INTELLIGENT ZN-MOF MATERIAL FOR PHOTOREGULATION OF ADSORPTION/RELEASE OF ORGANIC DYES

00: -

The invention relates to the technical field of preparation of intelligent zinc-based metal-organic frameworks materials, in particular to a preparation method of a light-responsive zinc-based metal-organic framework material (Zn-ADA/TPA0.5) and application thereof in adsorbing organic dyes. Under dark conditions, Zn-ADA/TPA0.5 adsorbed methylene blue and methyl orange in water phase. It was found that Zn-ADA/TPA0.5 adsorbed more methylene blue than methyl orange in the dark. However, under ultraviolet irradiation, the photoresponse unit in the framework of Zn-ADA/TPA0.5 changed from trans structure to cis structure, which led to the decrease of the pore size of Zn-ADA/TPA0.5, thus releasing all the absorbed methylene blue. Moreover, under the irradiation of visible light, the photoresponse unit in Zn-ADA/TPA0.5 can return from cis to trans, so it can be reused.

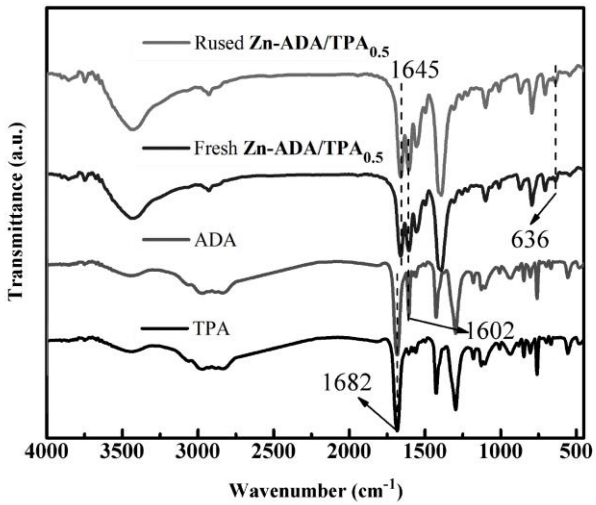

21: 2023/02718. 22: 2023/02/27. 43: 2023/05/10
51: G06K
71: Guilin University Of Electronic Technology
72: Huawei Du, Xiang Cai

54: AN IMAGE DETECTION METHOD BASED ON DEEP LEARNING

00: -

The invention relates to the technical field of image detection, in particular to an image detection method based on deep learning, including establishment of data module, data acquisition, image judgment, result output and feedback storage. Its beneficial effects are: By setting a data module with a database and using methods such as image acquisition, comparison, decomposition, recognition and analysis, we can compare the data closest to the collected images with the depth analysis based on the existing technology, analyze the unreasonable positions, store the unreasonable positions and update the database. It makes the data module realize the automatic retrieval corresponding, comparison and analysis of different images, greatly enlarging the range of adaptation and improving the universality.

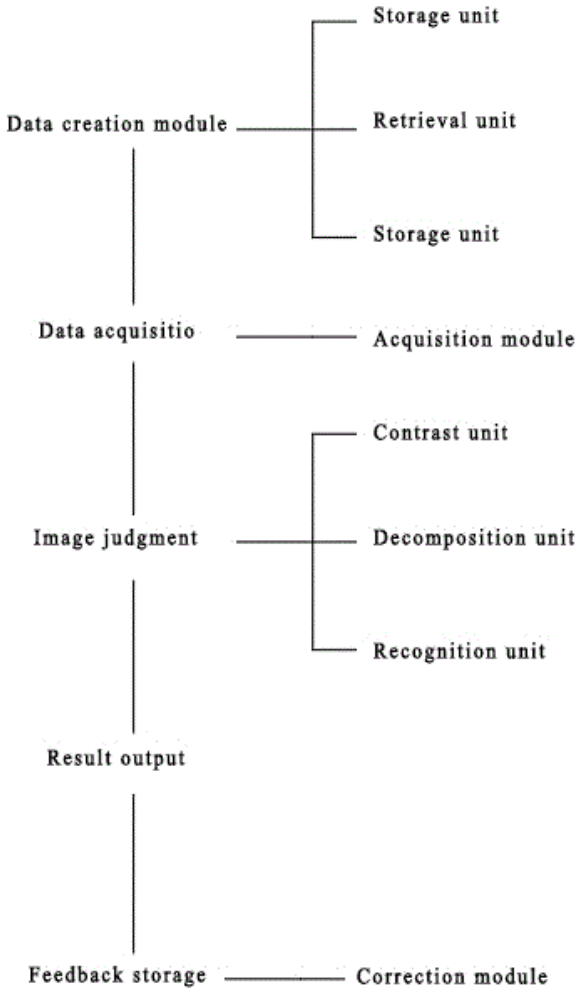

21: 2023/02719. 22: 2023/02/27. 43: 2023/05/10
51: G09B
71: XUZHOU COLLEGE OF INDUSTRIAL TECHNOLOGY
72: LIU Daoguang, LI Xinru

54: VIRTUAL SIMULATION TEACHING DEVICE BASED ON UNITY3D ENGINE
00: -
The invention discloses a virtual simulation teaching device based on unity3d engine, which comprises a touch integrated machine and a fixed base, wherein VR equipment can be connected; the upper side of the touch integrated machine is connected with a mobile screen group in a sliding way; the lower side wall of the touch integrated machine is integrally formed with a motor fixing seat; a motor is fixedly installed inside the motor fixing seat; a card is fixedly installed at the output end of the motor; the upper part of the inner side wall of the fixed base is provided with an annular clamping groove; the lower side wall of the inner cavity of the fixed base is provided with a clamping slot; and the lower side of the fixed base is fixedly installed with a wallboard, the connecting structure between the wallboard and the fixed base provides convenience for the maintenance and installation of the machine. At the same time, fixing the touch integrated machine on the wall can avoid bumping and losing, making it easy to manage. By connecting the VR device, the rectangular screen can adapt to a variety of literacy software with different aspect ratios, which is convenient for teachers to bring a variety of interesting literacy game teaching to students.

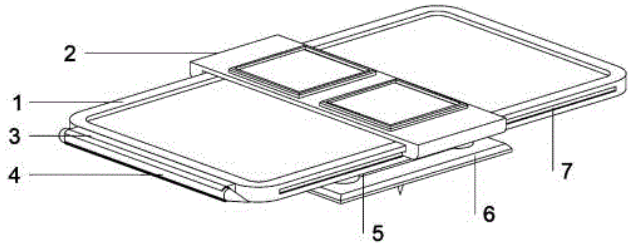

21: 2023/02720. 22: 2023/02/27. 43: 2023/05/10
51: A23K
71: Xia Zhang
72: Xia Zhang, Chuyue Zhang, Yao Zhang, Le Kang
54: A CONCENTRATED CHINESE HERBAL MEDICINE FEED SUITABLE FOR DETOXIFICATION AND DEODORIZATION AND AROMA ENHANCEMENT OF RUMINANTS AND A PREPARATION METHOD THEREOF
00: -
A concentrated Chinese herbal medicine feed suitable for detoxification, deodorization and aroma enhancement of ruminants and a preparation method thereof, the raw materials include Chinese herbal medicine, auxiliary material substrate and additives. The production method is completed through the steps of atomization, sealing and stirring, grinding and extrusion, and freeze-drying through the numerical control device. The invention is a concentrated Chinese herbal medicine feed, which has the characteristics of high effective components of Chinese herbal medicine, high nutrient content, and high content of medicinal components, which can greatly reduce the demand for Chinese herbal medicine feed, and reduce the cost of feed purchase, transportation and storage. The preparation method of the invention can make the ratio of raw materials precise, and at the same time, because the auxiliary material substrate contains starchy and fibrous components, it can avoid the loss of the ingredients in the Chinese herbal medicine to the greatest extent, so that the volatile and beneficial ingredients in the Chinese herbal medicine can be adsorbed and retained in the auxiliary substrate, improve the nutrient level in the feed, retain the medicinal ingredients in the feed, and enhance the use effect of Chinese herbal feed.

21: 2023/02721. 22: 2023/02/27. 43: 2023/05/12
51: C04B
71: Jilin Jianzhu University
72: MA Lijun, ZENG Xiaofeng, ZHANG Yunlong, WANG Jing, QIAN Xuesong, GAO Chunmei, ZHANG Huzhu, SUN Meng, XU Lu
54: NOVEL SPRAYING SELF-SENSING CEMENTITIOUS COMPOSITE MATERIAL AND ITS PREPARATION METHOD
00: -
The invention discloses a novel spraying self-sensing cementitious composite material and a preparation method thereof, belonging to the technical field of concrete. The raw materials of engineering cementitious composite (ECC) are cement, fly ash, metakaolin, carbon black, polypropylene fiber, water and water reducer. The specific test method is to pour cement, fly ash, metakaolin, machine-made sand and other dry materials into the mixer for mixing, then add carbon black into the mixer to fully blend with it, then add polypropylene fiber, after the fiber is evenly dispersed, add water and water reducer to mix to the flowing cream, and spray on the sprayed surface, then a novel spraying self-sensing cementitious

composite material can be obtained. The self-sensing cementitious composite material is applied to tunnel lining. The invention is prepared by adding carbon black on the basis of the original ordinary cementitious composite material to increase its conductivity, which is used to sense the internal damage of the concrete structure, replacing the traditional sensor, and realizing the self-sensing of the concrete. At the same time, metakaolin is used in the self-sensing cementitious composite material to replace part of the cement, which reduces the environmental pollution. In addition, this novel spraying self-sensing cementitious composite material improves the defects of traditional shotcrete such as low strength, poor toughness and poor durability, improves the performance of shotcrete, and thus ensures that the concrete structure has a high quality level.

21: 2023/02722. 22: 2023/02/27. 43: 2023/05/12
51: A23K
71: Xia Zhang
72: Xia Zhang, Chuyue Zhang, Yao Zhang, Le Kang
54: CHINESE HERBAL MEDICINE-ADDED FEED AUXILIARY MATERIAL MATRIX FORMULA AND PREPARATION METHOD THEREOF
00: -
The invention discloses a Chinese herbal medicine-added feed auxiliary material matrix formula, wherein the raw materials comprise the following part of compositions by weight: 400-760 parts of starchy components, 200-540 parts of functional plant components, and 200-560 parts of fibrous components. The invention can fully fuse and absorb the volatile components of the functional plant components through the macromolecular particle structure of the starchy components and the characteristics of the microbial polysaccharide cyclodextrin, so as to avoid the loss of volatile components, which can ensure the integrity of the ingredients of traditional Chinese medicine and prevent the ingredients from being damaged. The invention is entirely composed of pure plant ingredients, and more preferably plants rich in minerals and trace elements necessary for animal growth are used as raw materials, which are rich in nutrition, do not contain any hormones, preservatives, and additives, thereby better meeting the requirements and characteristics of Chinese herbal medicine pleiotropy and overall balance regulation. After the Chinese medicinal ingredients and starchy components are fully integrated in the invention, the spicy irritation in the medicine can be effectively reduced, and the palatability of animal feeding can be improved.

21: 2023/02723. 22: 2023/02/27. 43: 2023/05/12
51: A01G; G01N
71: NORTHWEST A&F UNIVERSITY
72: GONG Chunmei, TANG Lei, ZHANG Xiaoyan, BAI Juan, LI Jiayang, LEI Xingyu, LI Xiaofei, REN Jiejie, SHI Rui
54: METHOD FOR QUICKLY OBSERVING TRICHOMES AND STOMATA OF TEA PLANTS
00: -
The invention relates to a method for rapidly observing trichomes and stomata of tea plants, which can be effectively used for observing the distribution state of trichomes and stomata of tea plants. The main operation steps are collecting fresh and clean tissue, placing the side with trichome up, observing it under a fluorescent microscope and taking pictures. The invention is simple to operate and does not require too many chemical reagents. Moreover, it is safe in operation and effective in the observation of tea trichomes and stomata distribution, which has strong practicability.

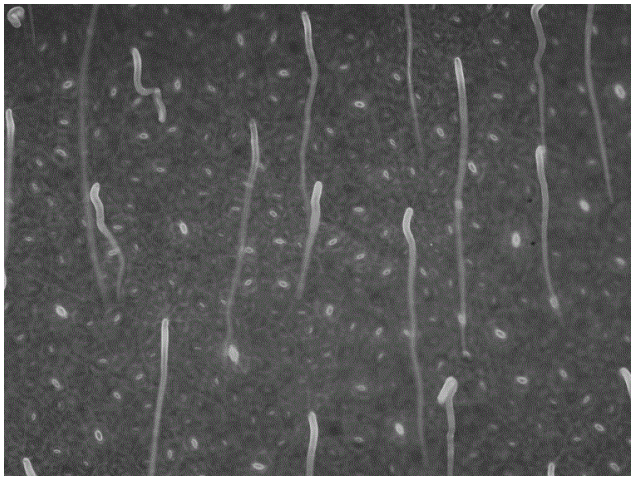

21: 2023/02724. 22: 2023/02/27. 43: 2023/05/12
51: C12N
71: Northwest A&F University Shenzhen Research Institute
72: Wang Erlong, Wang Gaoxue, Liang Yue, Liu Jia, Ling Fei, Liu Tianqiang, Liu Tao, Cao Ye

54: PREPARATION FOR BIVALENT SUBUNIT VACCINE OF STREPTOCOCCUS AGALACTIAE AND STREPTOCOCCUS INIAE IN TILAPIA AND ITS APPLICATION

00: -

The invention discloses a bivalent recombinant protein of Streptococcus agalactiae and Streptococcus iniae with the amino acid sequence as shown in SEQ ID NO: 1. The invention also discloses a preparation method for a binary subunit nanocarrier immersing vaccine prepared from the bivalent recombinant protein. The invention also discloses the immune protection effect of the bivalent subunit vaccine on tilapia against Streptococcus infection. The bivalent subunit vaccine of the invention significantly enhances the serum antibody level of tilapia, significantly reduces the mortality rate of tilapia infected with Streptococcus agalactiae and Streptococcus iniae, has a good immune protection effect on tilapia against Streptococcus infection; And it can be used as a potential candidate vaccine for tilapia against Streptococcus infection, and provides a new idea and an effective choice for immune prevention and control of tilapia streptococcosis.

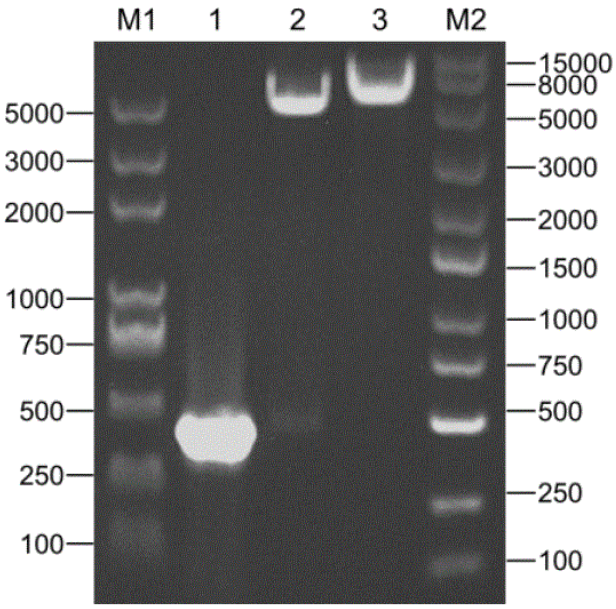

21: 2023/02725. 22: 2023/02/27. 43: 2023/05/12
51: A61K
71: Li Zude
72: Li Zude

54: A TRADITIONAL CHINESE MEDICINE FOR FEMALE IMMUNITY IMPROVEMENT AND CORONAVIRUS ELIMINATION AND PREPARATION METHOD THEREOF

00: -

The invention provides a traditional Chinese medicine for female immunity improvement and coronavirus elimination and preparation method thereof. The traditional Chinese medicine composition consists of the following 28 kinds of ingredients, in particular to Rhizoma Cynanchi stauntonii, Peucedanum praeruptorum Dunn, White mustard, caulis bambusae in taeniam, Platycodon grandiflorus, Anemarrhena asphodeloides, Adenophora stricta, Semen Euryales, Lonicera japonica, Atractylodes macrocephala Koidz., Astragalus membranaceus, Saposhnikovia divaricata, Forsythia suspensa, Ophiopogon japonicus, Schizonepeta tenuifolia, Mentha, Fallopia multiflora, yam, prepared rehmannia glutinosa, lycium Chinense, ginseng, Schisandra chinensis, Fructus Mori, Cistanche deserticola, Portulaca oleracea, Semen Sesami Nigrum, ginger, Glycyrrhiza uralensis, with easy availability and reasonable price of raw materials. The composition is a special product developed for females based on immunity improvement to prevent and eliminate the COVID-19, Omicron and multiple variants. Furthermore, the invention also has the effects of preventing influenza, delaying cells aging, prolonging life, strengthening the essence and cultivating spirits, supplementing body essence and marrow, tonifying kidney and nourishing Yin and detoxifying.

21: 2023/02726. 22: 2023/02/27. 43: 2023/05/12
51: A61K
71: Li Zude
72: Li Zude

54: A TRADITIONAL CHINESE MEDICINE COMPOSITION FOR FEMALE IMMUNITY IMPROVEMENT AND CORONAVIRUS ELIMINATION

00: -

The invention provides a traditional Chinese medicine composition for female immunity improvement and coronavirus elimination. The traditional Chinese medicine composition consists of the following 28 kinds of ingredients, in particular to Rhizoma Cynanchi stauntonii, Peucedanum

praeruptorum Dunn, White mustard, caulis bambusae in taeniam, Platycodon grandiflorus, Anemarrhena asphodeloides, Adenophora stricta, Semen Euryales, Lonicera japonica, Atractylodes macrocephala Koidz., Astragalus membranaceus, Saposhnikovia divaricata, Forsythia suspensa, Ophiopogon japonicus, Schizonepeta tenuifolia, Mentha, Fallopia multiflora, yam, prepared rehmannia glutinosa, lycium Chinense, ginseng, Schisandra chinensis, Fructus Mori, Cistanche deserticola, Portulaca oleracea, Semen Sesami Nigrum, ginger, Glycyrrhiza uralensis, with easy availability and reasonable price of raw materials. The composition is a special product developed for females based on immunity improvement to prevent and eliminate the COVID-19, Omicron and multiple variants. Furthermore, the invention also has the effects of preventing influenza, delaying cells aging, prolonging life, strengthening the essence and cultivating spirits, supplementing body essence and marrow, tonifying kidney, nourishing Yin and detoxifying.

21: 2023/02727. 22: 2023/02/27. 43: 2023/05/12
51: C01B
71: Weifang University
72: Zeng Wulan, Wang Xia, Kong Xiangjun
54: PREPARATION METHOD AND APPLICATION OF NITROGEN-DOPED CORNCOB-BASED ACTIVATED CARBON
00: -
The invention relates to the technical field of preparation of activated carbon, particularly relates to preparation method and application of nitrogen-doped corncob-based activated carbon. The preparation method of nitrogen-doped corncob-based activated carbon includes the following steps: pretreating corncob, nitrogen source and activator; mixing the activator with the treated corn enzymolysis residue, laying it flat in a tube furnace, introducing inert gas, replacing air, heating to the nitriding temperature of 400-450oC at a rate of 3-10oC/min, nitriding at constant temperature for 0.5-1.0h, continuously heating to the activation temperature of 600-800oC, and activating at constant temperature for 0.5-1.0h, introducing inert gas, and cooling to 100-110oC.in order to obtain the activated sample; drying the activated sample to obtain corncob-based activated carbon at different activation temperatures. The invention provides a preparation method of nitrogen-doped corncob-based activated carbon with good adsorption performance.

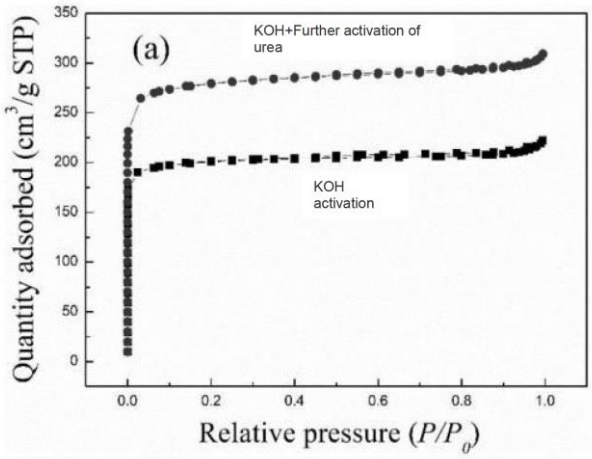

21: 2023/02728. 22: 2023/02/27. 43: 2023/05/02
51: A61B
71: ARMY MEDICAL UNIVERSITY, PEOPLE'S LIBERATION ARMY, PRC
72: YANG, Haoyang, ZONG, Zhaowen, DU, Wenqiong, CHEN, Lin, MA, Yunfei, LI, Feng, CHEN, Lei, LI, Bofei, ZHONG, Xin, JIA, Yijun, JIANG, Renqing, DU, Wenjuan
54: MULTIFUNCTIONAL EXAMINATION APPARATUS FOR PRE-HOSPITAL DAMAGE CONTROL RESUSCITATION
00: -
Disclosed is a multifunctional examination apparatus for pre-hospital damage control resuscitation. The multifunctional examination apparatus includes a central control module, a temperature control module, a testing module and a housing. The temperature control module is configured to acquire a first temperature value and send the first temperature value to the central control module, the central control module determines the first temperature value, when the first temperature value is smaller than a first set temperature, the central control module controls the temperature control module to perform heating until the first temperature value is greater than or equal to the first set temperature, the testing module is configured to obtain testing parameters based on a testing sample and send the testing parameters to the central control module, and the central control module constructs a medical record set. The present

invention can adapt to various extreme environments, and improve testing accuracy.

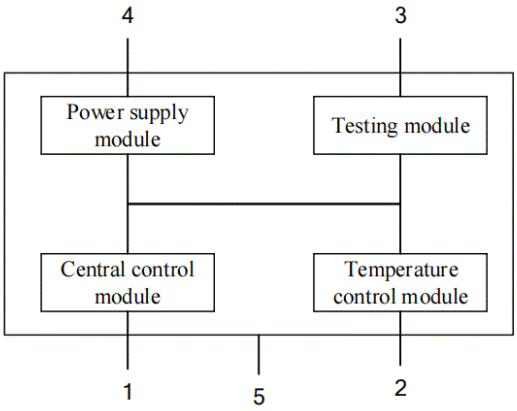

21: 2023/02729. 22: 2023/02/27. 43: 2023/05/10
51: G01N
71: Ningbo Dairy Group Co., Ltd.
72: LIU, Xiaotao, ZHOU, Runzhi, WU, Zhenhua, ZHANG, Guimin, ZHANG, Chao, FAN, Wenying, ZHANG, Wenlong, GU, Xiangguo
54: SYSTEM FOR SCREENING DAIRY COWS HAVING SUBCLINICAL MASTITIS IN DAIRY HERD
00: -
The present invention discloses a system for screening dairy cows having subclinical mastitis in a dairy herd, including a milk sampling module, a milk composition analyzer, an information acquisition and input module, a parameter correlation analysis module, a multiple regression equation establishing module and a dairy cow subclinical mastitis attack percentage cut-off point determining module. The screening system of the present invention is used for quickly, simply and accurately screening dairy cows having subclinical mastitis in a dairy herd, so that the management personnel of a dairy farm can exactly know which cows are suffered from the subclinical mastitis as early as possible, thereby providing guarantee for early prevention and treatment of mastitis for dairy cows in the dairy farm.

21: 2023/02730. 22: 2023/02/27. 43: 2023/05/02
51: C07C
71: Ningbo Polytechnic, Henghe Materials and Science Technology Co., Ltd.
72: CHEN, Yanjun, PENG, Zhenbo, JIA, Yating
54: METHOD FOR PREPARING (BENZENE-1,3,5-TRIYL) TRIACETONITRILE
00: -
The present invention belongs to the technical field of organic synthesis, and particularly relates to a method for preparing (benzene-1,3,5-triyl) triacetonitrile. A reaction reagent is a mixed solvent of an organic solvent and water. Adding water not only improves the solubility of a reactant potassium cyanide, but also prompts potassium chloride and potassium bromide generated to enter an aqueous phase timely, thereby facilitating a forward reaction, shortening the reaction duration and significantly improving the conversion ratio of raw materials. A catalytically equivalent organic alkali is added into a reaction system to prompt halide ions to leave, so that efficiency of the forward reaction is promoted, and the product is easier to separate and purify. Compared with the time reported, the reaction duration is at least shortened by 13 - 142 h, so a huge time cost is saved and the efficiency of quantitative production of products is improved.

21: 2023/02731. 22: 2023/02/27. 43: 2023/05/02
51: C07C
71: Ningbo Polytechnic, Henghe Materials and Science Technology Co., Ltd.
72: CHEN, Yanjun, PENG, Zhenbo, SHEN, Fanghao
54: METHOD FOR PREPARING (3-BROMO-2-FLUOROPHENYL) METHANAMINE
00: -
The present invention provides a method for preparing (3-bromo-2-fluorophenyl) methanamine, including the following steps: dissolving 3-Bromo-2-fluorobenzonitrile in an organic solvent to form a 3-Bromo-2-fluorobenzonitrile solution, dropwise adding a BH3.Me2S (a borane-dimethyl sulfide complex) solution into the 3-Bromo-2-fluorobenzonitrile solution to react, and then dropwise adding methanol for a quenching reaction till no hydrogen is released; and after concentrating a reactant, adding methanol to dissolve the reactant, performing reflux stirring for 2 - 5 h, and after removing a solvent, passing a concentrate through a chromatographic column and eluting the concentrate to obtain (3-bromo-2-fluorophenyl) methanamine. The method features low production cost, high product yield and high product purity and simple operation, and is suitable for industrial mass production.

21: 2023/02732. 22: 2023/02/27. 43: 2023/05/02

51: C07C
71: Ningbo Polytechnic, Henghe Materials and Science Technology Co., Ltd.
72: CHEN, Yanjun, PENG, Zhenbo, ZHOU, Jiahao
54: METHOD FOR PREPARING 4-AMINONAPHTHALENE-2,6-DICARBOXYLIC ACID
00: -
Provided is a method for preparing 4-aminonaphthalene-2,6-dicarboxylic acid, including: adding 2,6-naphthalenedicarboxylic acid into concentrated sulfuric acid, dropwise adding a dilute nitric acid solution, performing a reaction at room temperature for 8 - 12 h after dropwise addition, pouring a reaction system into ice water to separate out a yellow solid, washing a filter cake with water and drying the same after filtration, and recrystallizing and drying the filter cake to obtain a white intermediate; and adding methanol, a zinc powder and a saturated ammonium chloride aqueous solution into the intermediate for reaction, performing filtration, adding dimethyl sulfoxide and/or N,N-dimethylformamide after drying for stirring at 120-150 Celsius degrees for 0.5 - 2 h, filtering the mixture to obtain a filtrate, adding water into the filtrate to separate out a yellow solid, performing filtration, washing a filter cake with water, and drying the filter cake to obtain a product.

21: 2023/02733. 22: 2023/02/27. 43: 2023/05/02
51: C07C
71: Ningbo Polytechnic, Henghe Materials and Science Technology Co., Ltd.
72: PENG, Zhenbo, CHEN, Yanjun, LI, Chao
54: IMPROVED METHOD FOR PREPARING 2,5-DISUBSTITUTED-1,4-TEREPHTHALDEHYDE
00: -
The present invention relates to the technical field of organic synthesis, and particularly relates to an improved method for preparing 2,5-disubstituted-1,4-terephthaldehyde. The method includes the following steps: S1: weighing 2,5-disubstituted-1,4-dibromobenzene, tetramethylethylenediamine, tert-Butyllithium and Dimethyl Formamide (DMF) in proportion for later use; S2: putting 2,5-disubstituted-1,4-dibromobenzene and tetramethylethylenediamine in a three-necked flask, putting the three-necked flask in a dry ice ethanol bath for cooling, then dropwise adding tert-Butyllithium, heating the mixture to room temperature after dropwise addition, and stirring the mixture; S3: putting the reaction system in the S2 again in the dry ice ethanol bath for cooling and dropwise adding DMF into the system, removing the dry ice ethanol bath after dropwise addition, and stirring the mixture at room temperature; and S4: after completing the reaction, performing post-treatment in an ice bath to obtain a white solid product.

21: 2023/02734. 22: 2023/02/27. 43: 2023/05/02
51: C08F
71: Ningbo Polytechnic, Ningbo MaterChem Technology Co., Ltd.
72: CHEN, Yanjun, PENG, Zhenbo, REN, Jiahui, ZHANG, Farao
54: POLY(NORBORNENE-B-POLAR FUNCTIONALIZED NORBORNENE) AND PREPARATION METHOD THEREFOR
00: -
The present invention relates to a poly (norbornene-b-polar functionalized norbornene) and a preparation method therefor, and a block copolymer of polynorbornene and polar functionalized norbornene can be obtained according to the preparation method.

21: 2023/02735. 22: 2023/02/27. 43: 2023/05/02
51: C08F
71: Ningbo Polytechnic, Ningbo MaterChem Technology Co., Ltd.
72: CHEN, Yanjun, PENG, Zhenbo, FENG, Yibin, ZHANG, Farao
54: POLY(NORBORNENE-B-VINYL NORBORNENE) AND PREPARATION METHOD THEREFOR
00: -
The present invention relates to a poly (norbornene-b-vinyl norbornene) and a preparation method therefor, and a block copolymer poly (norbornene-b-vinyl norbornene) can be obtained according to the preparation method, the block copolymer obtained has a high VNB monomer insertion rate, and has a mass content of more than 20 percent.

21: 2023/02736. 22: 2023/02/27. 43: 2023/05/02
51: C08F
71: Ningbo Polytechnic, Henghe Materials and Science Technology Co., Ltd.
72: PENG, Zhenbo, CHEN, Yanjun, CHEN, Shengao

54: POLYVINYL NORBORNENE AND PREPARATION METHOD THEREFOR
00: -
The present invention relates to polyvinyl norbornene and a preparation method therefor and aims at solving the problems of low catalytic activity, a low monomer conversion rate and an indefinite polymer structure of an existing nickel catalyst.

21: 2023/02737. 22: 2023/02/27. 43: 2023/05/02
51: C07H
71: Ningbo Polytechnic, Ningbo MaterChem Technology Co., Ltd.
72: CHEN, Yanjun, PENG, Zhenbo, LI, Hantao, ZHANG, Farao
54: THIOGLUCOSE COMPOUND AND PREPARATION METHOD THEREFOR
00: -
The present invention provides a method for preparing a thioglucose compound. A synthetic method features available raw materials and a low production cost, and is suitable for industrial production.

21: 2023/02738. 22: 2023/02/27. 43: 2023/05/02
51: C07F
71: Ningbo Polytechnic, Henghe Materials and Science Technology Co., Ltd.
72: PENG, Zhenbo, CHEN, Yanjun, ZHU, Wenwen
54: PREPARATION METHOD FOR CESIUM PIVALATE-PROMOTED ARYLBORONIC ESTER
00: -
The present invention provides a preparation method for cesium pivalate-promoted arylboronic ester. The method includes the following steps: dissolving a compound of formula (I) and a diboron compound in an organic solvent, and then adding an organic solvent dissolved with cesium pivalate, palladium acetate and triphenylphosphine for reaction to obtain the arylboronic ester, where in formula (I), R1, R2, R3, R4 and R5 each are independently selected from H, C1-C10 alkyl, C2-C10 alkenyl, C2-C10 alkynyl, C1-C10 alkoxy, hydroxyl, hydroxy-substituted C1-C10 alkyl, phenyl, and C1-C10 alkylamino, and X is selected from F, Cl, Br, and I. The preparation method has the advantages of being low in production cost, high in yield, high in purity, and simple in operation, and is suitable for industrial mass production.

21: 2023/02739. 22: 2023/02/27. 43: 2023/05/10
51: B01D
71: Qingdao University
72: Wenhua XU, Fang ZHOU, Shaojuan CHEN, Shibin SUN, Yiming LIU, Jianwei MA
33: CN 31: 202211011134.4 32: 2022-08-23
54: A POLYESTER/CHITOSAN GEL COMPOSITE FIBROUS MEMBRANE AND ITS PREPARATION METHOD
00: -
The present invention belongs to the field of composite fiber membrane technology, specifically relates to a polyester/chitosan gel composite fiber membrane and its preparation method, the thickness of the polyester/chitosan gel composite fiber membrane is 100-800 microns, composed of ultra-fine fibers with a diameter of 300-800nm, the polyester/chitosan gel composite fiber membrane preparation method The process of the polyester/chitosan gel composite fibre membrane is to obtain the tannic acid loaded polyester/chitosan gel composite fibre membrane by using the coaxial electrospinning and photo-crosslinking method, through the inner core solution formed by dissolving the polyester in trifluoroethanol and the outer layer solution formed by dissolving the chitosan in a solvent mixture of trifluoroethanol and acetic acid with a concentration of 2% by mass in the ratio of 1:1; the process of the preparation method is simple and easy, and the prepared polyester/chitosan gel composite fibre membrane loaded with tannic acid is easy to use. The tannin-loaded polyester/chitosan gel composite fibrous film has a tensile strength greater than or equal to 5.4 Mpa and a bacterial inhibition rate greater than or equal to 72%, with good biocompatibility, degradability, antibacterial properties and mechanical properties, and can be used in the field of trauma dressing technology.

21: 2023/02740. 22: 2023/02/27. 43: 2023/05/10
51: D06M
71: Qingdao University
72: Guoli HEI, Wenhua XU, Fang ZHOU, Shaojuan CHEN, Shibin SUN, Yiming LIU, Jianwei MA
33: CN 31: 202211011534.5 32: 2022-08-23
54: A GELATIN/POLYESTER FIBER DRESSING AND ITS PREPARATION METHOD
00: -
The present invention belongs to the technical field of composite fiber dressing, and specifically relates

to a gelatin/polyester fiber dressing and its preparation method, the gelatin/polyester fiber dressing is composed of ultra-fine fibers with a diameter of 300-1500 nm and contains a pH indicator, which can achieve visual color change in the pH range of 5-9, and also has good cell The gelatin/polyester dressing is prepared by dissolving polyester and curcumin in a mixture of chloroform and N ,N-dimethylformamide as polyester spinning solution and gelatin in trifluoroethanol solvent as gelatin spinning solution, and co-electrospinning the polyester spinning solution and gelatin spinning solution to obtain gelatin/polyester dressing; the preparation process is simple. On the one hand, gelatin as a hydrophilic component improves the hydrophilicity and discoloration sensitivity of gelatin/polyester dressing, on the other hand, gelatin has good cell adhesion and cytocompatibility, which improves the cellular activity of gelatin/polyester dressing.

21: 2023/02741. 22: 2023/02/27. 43: 2023/05/02
51: H01G; B82Y
71: Anhui Polytechnic University
72: Xianfu LI, Wenrui WU, Xing WANG, Fenhua WANG, Jiangsheng HUANG, Yue YAN, Fuxiang LI, Hao ZHANG
33: CN 31: 202211265569.1 32: 2022-10-17
54: A PREPARATION METHOD OF TRANSITION METAL SULFIDE DERIVED FROM ZIF-67 FOR ELECTRODE MATERIAL
00: -
A preparation method of transition metal sulfide derived from ZIF-67 for electrode material includes the following steps: (1) Dissolving 2-methylimidazole and cobalt nitrate in organic solvent, standing at room temperature for 24h to prepare metal-organic framework (MOFs) ZIF-67; (2) ZIF-67, copper chloride, stannous chloride and thioacetamide are used as reactants to form precursor solution in an organic solvent under the condition of stirring, and the precursor solution is reacted in a stainless steel reaction kettle at 90-120 degrees celcius for 4-10h; (3) After the reaction kettle is cooled to room temperature, the transparent solution on the upper layer is poured out, and the products are washed with absolute ethanol and deionized water respectively, and then dried in a vacuum drying oven to obtain Cu2CoSnS4 (CCTS) nanomaterials derived from ZIF-67. The method of the invention is simple in process, green and environment-friendly, and the porous structure of CCTS nanomaterials increases the specific surface area and accelerates the diffusion and transmission of electrolyte ions, thus having excellent electrochemical performance. Therefore, the invention has a broad application prospect in the field of high-performance supercapacitors.

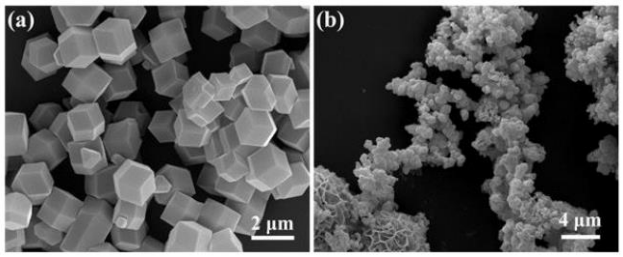

21: 2023/02742. 22: 2023/02/27. 43: 2023/05/02
51: A61H
71: Anhui Polytechnic University, Hefei University of Technology
72: Zhen ZHANG, Zhongming LV, Anheng WANG, Ming FANG, Manman XU
33: CN 31: 202210677989.4 32: 2022-06-15
54: A DEVICE ASSISTING LOWER LIMB FLEXION AND EXTENSION REHABILITATION TRAINING AND ITS CONTROL METHOD
00: -
The invention relates to the technical field of rehabilitation training devices, in particular to a device assisting lower limb flexion and extension rehabilitation training and its control method. By setting a base, a seat and two groups of lower limb rehabilitation training mechanisms including lower limb exoskeleton, drive motor, first drive mechanism, second drive mechanism, calf push rod and upper leg push rod, the user can choose to perform rehabilitation training on the calf, i.e. knee joint flexion and extension, or on the thigh, that is, hip joint flexion and extension for rehabilitation training. This device can realize multiple modes of lower limb rehabilitation training, realize patients' independent flexion and extension training, and improve training efficiency.

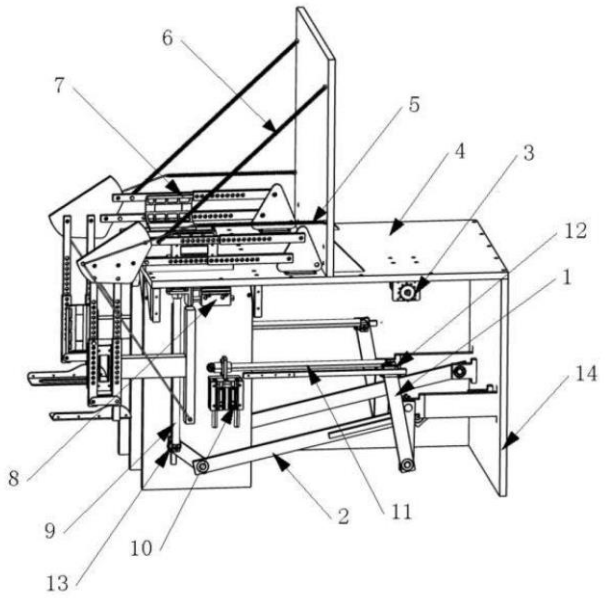

21: 2023/02743. 22: 2023/02/27. 43: 2023/05/02
51: G09B
71: Shaodong Xingzhi Education Technology Co., Ltd., NO.1 HIGH SCHOOL SHAODONG HUNAN
72: XIAO, Haibo
33: CN 31: 202211137018.7 32: 2022-09-19
54: MULTIMEDIA PUSH-PULL BLACKBOARD BASED ON MULTIMEDIA CLASSROOMS IN PRIMARYAND SECONDARY SCHOOLS
00: -
The present invention relates to the technical field of push-pull multimedia blackboards, and specifically discloses a multimedia push-pull blackboard based on multimedia classrooms in primary and secondary schools. The blackboard includes a blackboard body. The blackboard body includes a blackboard frame. Both inner walls of the blackboard frame near the back are provided with a first blackboard respectively, and a cavity for mounting a projection whiteboard is formed between the two first blackboards. Two moving frames are slidably connected to the top and bottom of a central inner wall of the blackboard frame, and both inner walls of the two moving frames near the front are provided with a second blackboard respectively. A moving hole is provided on the outer side of the moving frame near the back, and a partition plate is inserted into the moving hole.

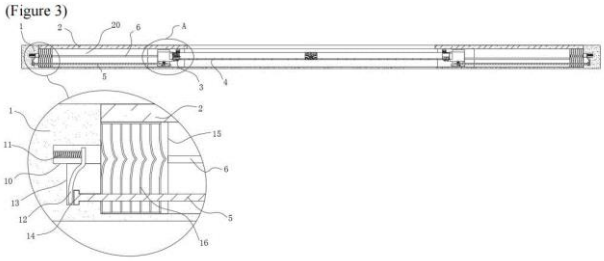

21: 2023/02744. 22: 2023/02/27. 43: 2023/05/02
51: C12M
71: Alphavita Bio-scientific (Dalian) Co., Ltd.
72: QIU, Changyi, ZHAO, Guangyu, WANG, Chengyu, LIU, Jinyang, JIANG, Sen, SHENG, Meina, ZHAN, Lei, ZHANG, Xiaolong, XU, Guijie, LIANG, Jingjing
54: CO2 CONCENTRATION CONTROL DEVICE FOR DRY HEAT STERILIZATION CO2 INCUBATOR
00: -
Provided is a CO2 concentration control device for a dry heat sterilization CO2 incubator. The device includes an incubator and a CO2 gas supply interface connected to a CO2 gas supply solenoid valve, a CO2 gas outlet interface connected to an inlet of a CO2 concentration detection box through a CO2 gas outlet solenoid valve, a CO2 gas return interface connected to an outlet of the CO2 concentration detection box through a CO2 gas return solenoid valve, and a controller connected to the CO2 gas supply solenoid valve, the CO2 gas outlet solenoid valve, the CO2 gas return solenoid valve and the CO2 concentration detection box, a CO2 concentration detection cabin for detecting the CO2 concentration is embedded in the CO2 concentration detection box and transmits the concentration information to the controller, and the controller controls the duration of opening and closing of the CO2 gas supply solenoid valve.

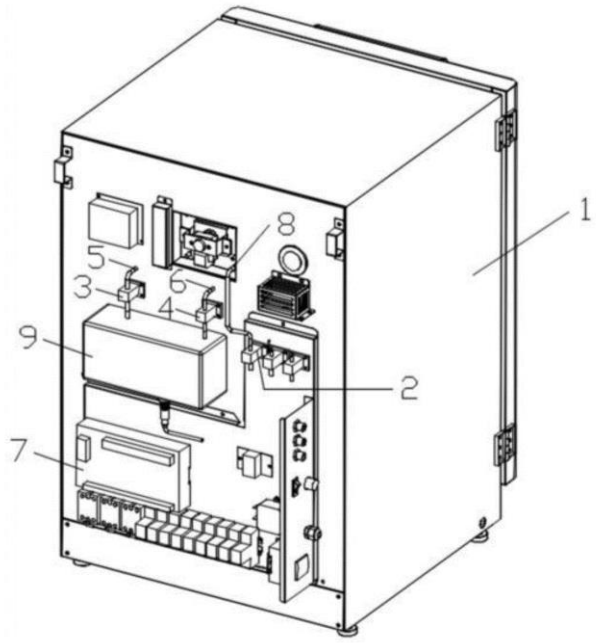

21: 2023/02745. 22: 2023/02/27. 43: 2023/05/02
51: G06F
71: Hebei Chemical and Pharmaceutical College
72: WANG, Hong
54: DAMPING DEVICE FOR COMPUTER
00: -
Provided is a damping device for a computer. The damping device includes a case, where a host is mounted on the case, a plurality of spaced columnar protrusions are fixedly arranged on a motherboard, the case is fixedly provided with sliding grooves, the damping device further includes elastic connecting assemblies, the elastic connecting assemblies have inner springs, and outer springs sleeve the inner springs. The damping device for a computer according to the present invention can partially or completely constitute elastic connection between the columnar protrusions and the sliding grooves, that is, constitute elastic connection between the motherboard and the case by using the elastic connecting assemblies, and when the computer vibrates due to the outside or itself, the elastic connecting assemblies can buffer and eliminate an influence of vibration on the motherboard, so as to achieve a better damping effect.

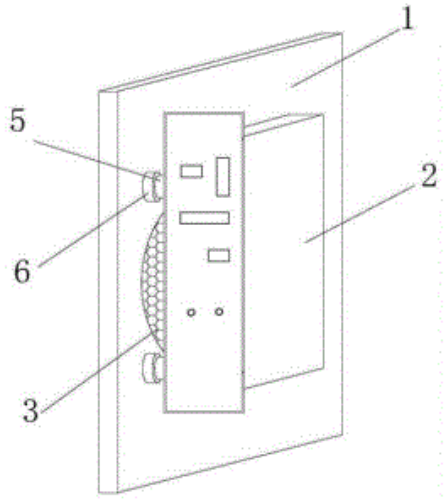

21: 2023/02746. 22: 2023/02/27. 43: 2023/05/11
51: C12N; G01N
71: Gansu Agricultural University
72: WANG Caixiang, SU Junji, WANG Yujiao, LI Meili, JU Jisheng, LING Pingjie, WEI Wei
54: GHABC1K14-A09 GENE AND APPLICATION THEREOF IN DROUGHT AND SALT TOLERANCE OF UPLAND COTTON (GOSSYPIUM HIRSUTUM)
00: -
The invention discloses a GhABC1K14-A09 gene of Gossypium hirsutum and its application in drought resistance and salt tolerance of Gossypium hirsutum, belonging to the technical field of genetic engineering. The nucleotide sequence of the gene is shown in SEQ ID NO: 7, and the invention also discloses the application of the Gossypium hirsutum GhABC1K14-A09 gene in improving the drought resistance and salt tolerance of plants. According to the invention, the target gene is silenced in cotton by using VIGS technology, and after drought and salt stress treatment, it is found that the target gene will cause the activity of antioxidant enzymes (CAT, POD and SOD), the content of soluble sugar and chlorophyll will decrease and the content of MDA will increase, and the expression of stress-related genes such as GhSOS1, GhNHX1 and GhCBL3 will decrease, that is, the silencing of the target gene leads to the decrease of cotton resistance, which proves that the gene positively regulates cotton to respond to drought and salt stress, and the invention is a high drought resistance of Gossypium hirsutum.

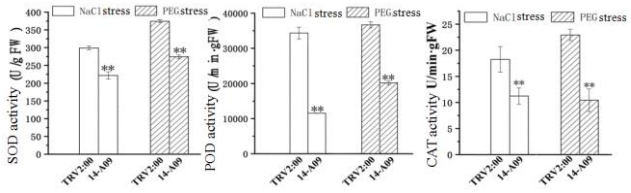

21: 2023/02747. 22: 2023/02/27. 43: 2023/05/10
51: G06F
71: Guangzhou University
72: Peiyuan Wu, Benteng Zhang, Shikuan Huang, Peng Liu
54: A METHOD FOR PREPARING GREEN AND ENVIRONMENTALLY FRIENDLY STARCH-BASED FLEXIBLE KEYBOARD
00: -
The invention relates to the technical field of keyboard making, in particular to a preparation method of green and environmental friendly starch based flexible keyboard. It includes the following steps: preparation of high-amylose starch/Ca/glycerin/Zn composite conductive hydrogel; Design flexible circuit assembly scheme; Design and preparation of starch based flexible keyboard; The beneficial effects are as follows: the preparation method of green and environmental friendly starch based flexible keyboard proposed by the invention takes natural high-amylose starch as raw material, and through a simple process, designs and prepares a foldable and degradable flexible keyboard with starch as the main base material, which accounts for more than 80% of gel solid; It broadens the range of flexible keyboard raw materials, stimulates the flexible keyboard design of new ideas, is helpful to produce excellent performance, economic and practical flexible keyboard, to meet people's use of high-end flexible keyboard demand.

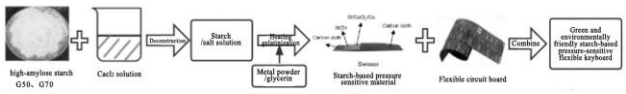

21: 2023/02748. 22: 2023/02/27. 43: 2023/05/10
51: G09B
71: XUZHOU COLLEGE OF INDUSTRIAL TECHNOLOGY
72: GAO Zhengrong, LIU Daoguang
54: VIRTUAL REALITY TECHNOLOGY DEVICE FOR CHINESE PHONETIC TEACHING
00: -
The invention discloses a virtual reality technology device for Chinese phonetic teaching, which comprises an adjustable box body and VR glasses, wherein a coaming is arranged on the inner side of the adjustable box body near the right rear, a winder is arranged on the inner side of the coaming, a box body with an open upper end is also arranged on the inner side of the coaming, the upper end of the adjustable box body is covered with a cover plate, the upper end of the box body passes through the cover plate, and the cover plate is provided with a turnable flip cover at the upper port position of the box body. A connecting wire is wound on the winder, and when VR glasses are used, they are connected and fixed by the connecting wire to prevent users from carrying them at will, which can effectively avoid the loss of VR glasses, and the problems encountered in Chinese phonetic teaching can be corrected in time through microphones and earphones respectively arranged on both sides of VR glasses.

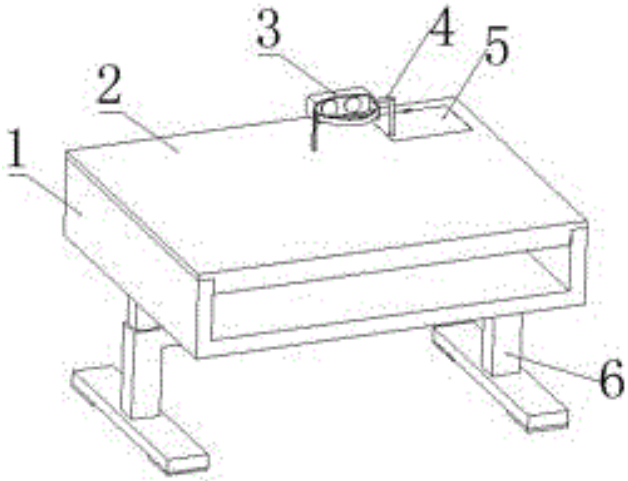

21: 2023/02749. 22: 2023/02/27. 43: 2023/05/12
51: A61B
71: Peking Union Medical College Hospital
72: Lin Ma, Zhigang Ji, Zhongming Huang
33: CN 31: 202310128937.6 32: 2023-02-17
54: A LAPAROSCOPIC CLAMPING MECHANISM FOR UROLOGICAL SURGERY
00: -
The invention discloses a laparoscopic clamping mechanism for urological surgery. The utility model comprises a first mounting bracket, wherein the lower right thread of the first mounting bracket is provided with a fixed screw; The adjustable bracket

is arranged in the upper end of the first mounting bracket is "L"-shaped, and the adjustable bracket is provided with a second mounting bracket on the right end of the outer sleeve; It also includes an X-shaft angle adjustment mechanism mounted on the right end of the second mounting bracket; The Y-shaft angle adjustable mechanism is installed on the right end of the X-shaft angle adjustable mechanism; The Z-shaft angle adjustable mechanism is installed on the right side of the Y-shaft angle adjustable mechanism. In the urological surgery department, the laparoscopic clamping mechanism is used to adjust the front and rear angles, left and right angles and upper and lower angles through the X-shaft angle adjustable mechanism, Y-shaft angle adjustable mechanism and Z-shaft angle adjustable mechanism in turn. The laparoscope can be directly placed between the first and second clamping base, and then the clamping limit can be achieved through the equal-angle distribution of the clamping rod, so as to promote even force and reduce damage.

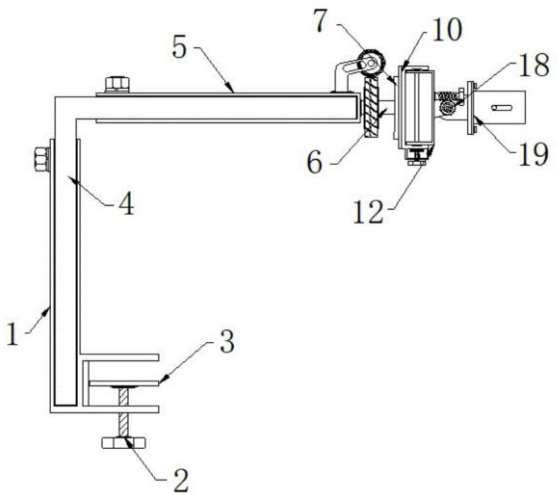

21: 2023/02750. 22: 2023/02/27. 43: 2023/05/12
51: C09K
71: Yancheng Polytechnic College
72: ZHOU Hongtao, SONG Qiuxia, ZHOU Bin, WANG Ke, WANG Shudong
54: METHOD FOR PREPARING HIGH-PERFORMANCE FLAME-RETARDANT FABRIC AND PREPARATION DEVICE THEREOF
00: -
The invention relates to the technical field of flame-retardant fabric production, and in particular to a method for preparing high-performance flame-retardant fabric and a preparation device thereof. The preparation method includes: uniformly mixing the flame-retardant acrylic chloride fiber, conductive carbon fiber and the polyimide fiber; sequentially opening, carding, drawing and double twisting to obtain stranded wires, and then weaving the stranded wires into a base fabric by using a rapier loom; soaking the base fabric in a flame-retardant additive, washing the soaked fabric with water, dyeing and setting, then drying, and finally preparing a blended flame-retardant fabric through tentering and pre-shrinking; the preparation device includes: a transmission device, a position limiting device, a supporting device, a servo motor, toothed pulleys, toothed belts and a preparation device. The high-performance flame-retardant fabrics prepared by the invention have excellent flame-retardant performance, high strength, high moisture permeability, high color fastness, easy setting and the like, and the preparation process is simple and the production efficiency is high.

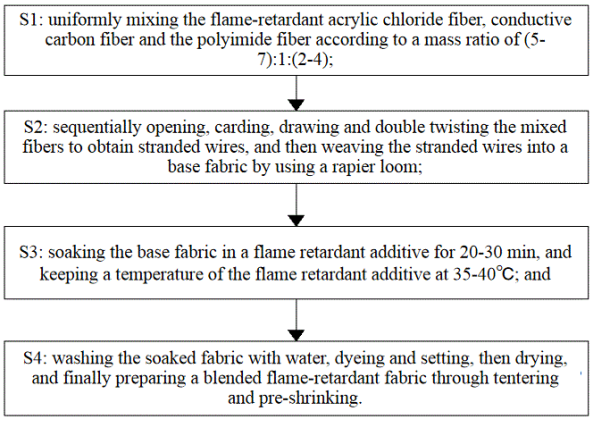

21: 2023/02752. 22: 2023/02/27. 43: 2023/05/02
51: C01B
71: Weifang University
72: Wang Xia, Kong Xiangjun, Zeng Wulan
54: PREPARATION METHOD OF PEANUT SHELL-BASED ACTIVATED CARBON AND ITS APPLICATION IN CO2 CAPTURE AND ADSORPTION
00: -
The invention relates to the technical field of preparation of activated carbon, in particular to a preparation method of peanut shell-based activated carbon and its application in CO2 capture and concentration. The preparation method of peanut shell-based activated carbon includes pretreatment,

one-step activation, washing the activated sample to neutrality, and drying to obtain peanut shell-based activated carbon at different activation temperatures; the peanut shell-based activated carbon obtained by the preparation method provided by the invention has high adsorption performance and low raw material cost; the preparation method has simple and rapid steps; in application, it is resistant to high temperature, which is more conducive to the adsorption of CO2 in the flue gas of coal-fired power plants.

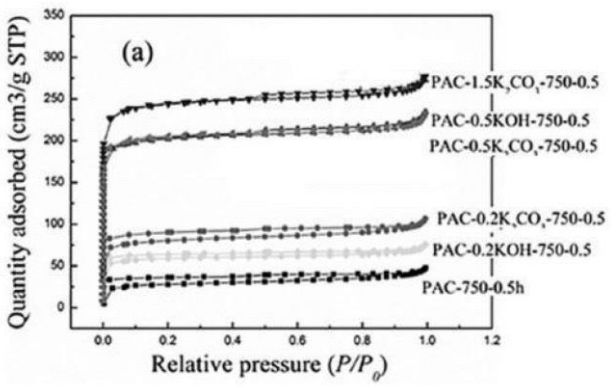

21: 2023/02753. 22: 2023/02/27. 43: 2023/05/02
51: G01N
71: YELLOW SEA FISHERIES RESEARCH INSTITUTE
72: YANG Qian, ZHAO Jun, CHEN Jufa, ZHOU Mingying, ZHANG Yan, SUN Yao
54: QUANTITATIVE ASSESSMENT SYSTEM OF LEAD IN SEDIMENTS OF AQUACULTURE SEA AREA
00: -
The invention discloses a quantitative assessment system of lead in sediments of the aquaculture sea area, which includes: An acquisition module, a pre-processing module, a model building module and a control module, wherein the acquisition module is respectively connected with the pre-processing module and the model building module, and the model building module is respectively connected with the pre-processing module and the control module; the acquisition module is used to obtain sediment samples and sediment sample quality of the aquaculture sea area; the pretreatment module is used for detecting the sediment samples of the aquaculture sea area to obtain the heavy metal lead content of the sediment samples; the model building module is used to build a correlation model based on the sediment sample quality and the heavy metal lead content of the sediment sample; the control module is used to control the content of heavy metal lead in the sediment of the aquaculture sea area to be detected within the standard range based on the correlation model. The invention can control the quality of heavy metal lead within the pollutant standard of aquaculture sediment by simply quantifying the quality of organic matter in the aquaculture pond under adverse detection conditions.

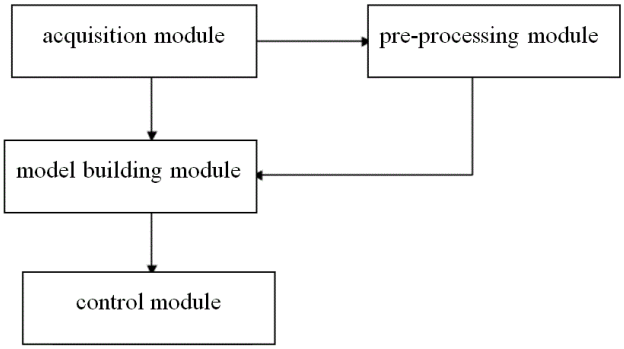

21: 2023/02754. 22: 2023/02/27. 43: 2023/05/02
51: C11D
71: HUZHOU COLLEGE
72: CHEN Haifeng, CAO Feng, WANG Yongya, YU Ying, LUO Wenqin, HAO Lifeng
54: PREPARATION METHOD OF ANTIBACTERIAL DEGRADABLE WASHING POWDER
00: -
The invention relates to an antibacterial degradable washing powder, the preparation method of which comprises the following steps: (1) evenly mixing 30-50 parts of surfactant and 20-40 parts of anhydrous sodium carbonate to obtain mixed solution a; (2) adding 10-30 parts of plant extract and 0.1-1 part of nano yttrium oxide into the mixed solution a in step (1) to obtain washing powder. The formula of the invention is mild, and the plant extract components in the formula have synergistic effect with nano yttrium oxide, so that the bacteriostatic function is strengthened and the effect is obvious.

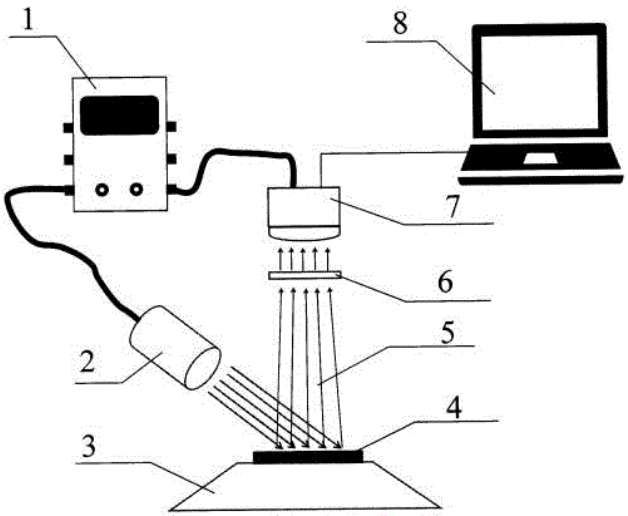

21: 2023/02755. 22: 2023/02/27. 43: 2023/05/02
51: E04B
71: Hebei Institute of Architecture and Engineering
72: Xu Yongfeng, He Tengfei, Li Minfeng, Guo Rongbing, Zhao Pengfei, Ji Anquan, Liu Lei, Liu Yang, Li Pengfei, Tian Zhihong

54: A VIBRATION INSULATION DEVICE FOR BUILDINGS

00: -

The invention relates to the technical field of engineering vibration isolation, and provides a vibration isolation device for buildings. The device comprises a first electromagnetic coil, which is fixedly arranged in the lower foundation of a building, and the magnetic field generated after being electrified is vertical; the second electromagnetic coil is fixedly arranged in the upper structure of the building, and the direction of the magnetic field generated after being electrified is opposite to that of the magnetic field generated by the first electromagnetic coil; the low base plate is arranged on that upper surface of the low foundation; the upper substrate is arranged on the lower surface of the upper structure and is in contact with the lower substrate; the electromagnetic reset part comprises a reset main body, a first connecting rod and a second connecting rod. The building isolation device provided by the invention can reduce the friction between the upper structure and the lower foundation of the building from the aspects of friction coefficient and pressure, and adjust the relative position of the upper structure and the lower foundation by electromagnetic reset, so as to improve the vibration performance of the building.

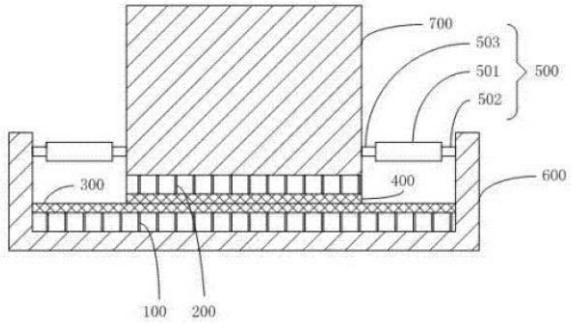

21: 2023/02756. 22: 2023/02/27. 43: 2023/05/02
51: C01F; C01G
71: Zhengzhou University of Aeronautics
72: Ke Xu, Binguo Zheng, Jiehu Cui, Chunguang Li, Junling Niu, Qingzhao Li, Yu Sun, Xiaofeng Jia, He Tao, Xiaohui Zhao, Haiping Liu, Jianyun Li, Lei Liu, Lizhen Liang, Xiangping Wang, Lingyan Jiang, Xu Luo

54: A METHOD OF ADOPTING MAGNESIUM CHLORIDE CARBONATE FOR REMOVING PHOSPHORUS FROM WATER

00: -

A method of adopting magnesium chloride carbonate for removing phosphorus from water, comprises the following steps: preparation of adsorbent; study on the data analysis method; study on the effect of amount on purification rate of magnesium chloride carbonate adsorbent; study on the effect of pH of phosphorus-containing simulated wastewater on purification rate of magnesium chloride carbonate adsorbent; study on the effect of absorption time on purification rate of magnesium chloride carbonate adsorbent; study on the effect of the initial concentration of phosphorus-containing simulated wastewater on purification rate of magnesium chloride carbonate adsorbent; study on adsorption isotherms. The advantages of the invention: a method of adopting magnesium chloride carbonate for removing phosphorus from water is provided, whose preparation method is convenient; the adsorption and removal effect of phosphorus in water is remarkable, and basically no sludge will be generated; the phosphorus removal effect is favorable in a short time and the operation is simple.

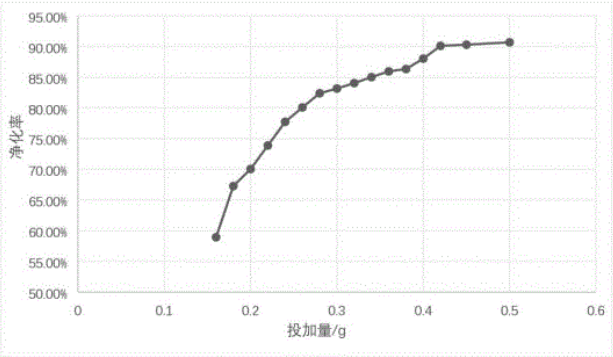

21: 2023/02757. 22: 2023/02/27. 43: 2023/05/02
51: G01N
71: NORTHWEST A&F UNIVERSITY, Zhejiang Zhongmengchang Health Technology Co., Ltd, Fuping County Inspection and Testing Center (Shaanxi Goat Milk Product Quality Supervision and Inspection Center)
72: GE Wupeng, HUO Zhenquan, HAO Guo, YANG Baowei, ZHANG Jing, WANG Long, DING Yi
54: METHOD FOR IDENTIFYING CONTENT OF BOVINE AND GOAT WHEY POWDER BASED ON NATIVE-PAGE
00: -
Disclosed is a method for identifying the content of bovine and goat whey powder based on Native-PAGE. The method is not only effective, but also may identify the mixture of bovine and goat whey powder by qualitative and semi-quantitative analysis. The method is simple in operation, high in invention feasibility, low in cost, easy to implement and apply in a wide range, and has good market development prospects. The specific methods include: defatting of bovine and goat whey powder samples, determining the protein content of the sample stock solution by BCA method, Native-PAGE, and blind verification. The correct rate of blind detection is 100 percent, and the mixing proportion may also be quantitatively evaluated. This method may be used to evaluate the purity of bovine and goat whey powder in production, and may be used to make qualitative and semi-quantitative preliminary judgment of mixed samples.

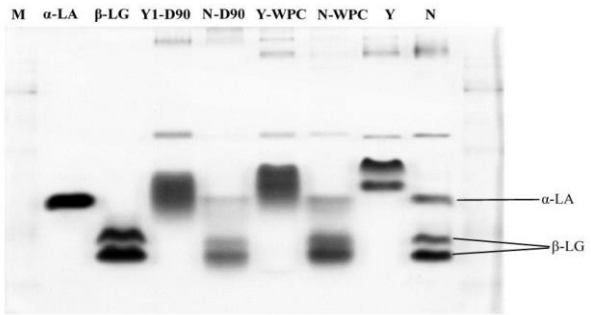

21: 2023/02758. 22: 2023/02/27. 43: 2023/05/02
51: G03B
71: SOUTHWEST UNIVERSITY
72: TANG Xi, ZHANG Siyan, DENG Tao, WU Jiagui, LIN Xiaodong, GAO Ziye, FAN Li, XIE Yingke
33: CN 31: 2023100808737 32: 2023-02-08
54: BICUBIC INTERPOLATION CIRCUIT BASED ON FPGA
00: -
The invention provides a bicubic interpolation circuit based on FPGA. The working mode of the circuit is as follows: firstly, a control unit reads pixels from an external DDR memory into an input buffer through DMA, and the read pixels will be circularly written into the input buffer; then, PE directly reads the input buffer into an internal operation register; after PE calculates the pixel points of a high-definition image, the output of PE is rearranged through the output buffer, so that the hardware output is directly connected with a high-definition video interface. The invention reduces the number of line buffers, improves the calculation amount of each time period, maximizes the throughput and reduces the delay time required for calculation; The output buffer is designed, so that the system can interface with the conventional video interface.

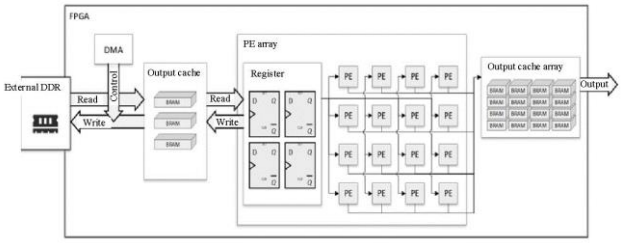

21: 2023/02759. 22: 2023/02/27. 43: 2023/05/02
51: G01N
71: Zhejiang Institute of Subtropical Crops
72: Xu Wan, Zhang WeiYi, Zhou Zhuang, Huang Jian, Yang YanPing, Fu Shuangbin, Wang Peilong, Ying Zhen, Yao Lijuan

54: PRETREATMENT METHOD BASED ON SPME FOR VOLATILE COMPONENT ANALYSIS OF CYMBIDIUM KANRAN

00: -

The present invention relates to the technical field of volatiles extraction, and disclosed is a pretreatment method based on SPME for volatile component analysis of Cymbidium kanran. The method includes the following steps: aging an extraction head of the solid-phase microextraction (SPME) at a gas chromatography (GC) sample feeding port, where an aging temperature is 250°C, and aging time is 30 min; putting samples to be tested into 20 ml head space bottles as analysis groups, and setting a variable in each of the analysis groups, where the number of the analysis groups is not less than 4; placing the aged extraction head at about 1 cm above the samples to be tested, and performing extraction and gas chromatography-mass spectrometry analysis on the analysis groups; and recording an analysis result of each of the analysis groups, and screening out variables capable of improving volatile components in each of the analysis groups. Compared with a traditional volatiles extraction method, in terms of an extraction amount of volatile components, when the extraction head of 50/30micronDVB/CAR/PDMS-2 cm is selected, and pretreatment conditions of 1.5 g of samples, an extraction temperature of 90°C, adsorption time of 40 min, and analysis time of 5 min are satisfied, the separated total volatile components of the Cymbidium kanran are the most.

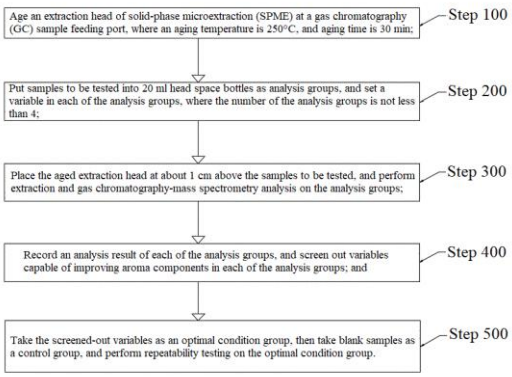

21: 2023/02760. 22: 2023/02/27. 43: 2023/05/02
51: C08F
71: HuangShan University
72: CHANG Guanru, ZHOU Quan, QI Zhaopeng, WANG Dan, CHEN Long

54: CATALYST PREPARED BY BENZOCYCLOALKYL ALPHA-DIIMIDE LIGAND, PREPARATION METHOD AND APPLICATION THEREOF

00: -

Disclosed are a catalyst prepared by benzocycloalkyl alpha-diimide ligand, a preparation method and an application thereof, and relate to the technical field of catalyst preparation of polyolefin materials. The benzocycloalkyl alpha-diimine Ni (II) complex is obtained by adding NiBr2 and benzocycloalkyl alpha-diimine ligand into dichloromethane for reaction and evaporating under reduced pressure. The invention synthesizes a kind of benzocycloalkyl alpha-diimine Ni (II) complex with axial benzyl substituents, and light branched polyethylene with extremely high molecular weight is produced by using these Ni (II) complex in ethylene polymerization.

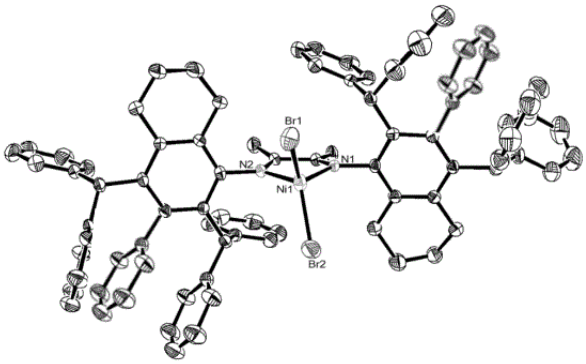

21: 2023/02761. 22: 2023/02/27. 43: 2023/05/02
51: H05K
71: Shanxi hi agent technology co., LTD
72: Duan Hubin, Hao Chunyan, Duan Tianjiao
33: CN 31: 2023201466596 32: 2023-01-20

54: FABRIC WITH AN ELECTRIC FIELD SHIELDING STRUCTURE

00: -

The invention discloses a fabric with an electric field shielding structure, And it comprises a reticular layer, and the first metal layer is adhered to the inner side of the reticular layer; an insulating layer is adhered to one side of the first metal layer far away from the reticular layer, and the second metal layer is adhered to the other side of the insulating layer, and an inner lining layer is adhered to the inner side of the second metal layer. According to the fabric with an electric field shielding structure, the reticular layer, the first metal layer, the insulating layer, the

second metal layer and the inner lining layer are sequentially bonded together, so that the reticular layer, the first metal layer, the insulating layer, the second metal layer and the inner lining layer form an integral fabric; And in this scheme, the external electric field can be shielded by the first metal layer of the fabric, and the second metal layer can play the role of forming an internal electric field, thereby shielding the influence of the external electric field on the body.

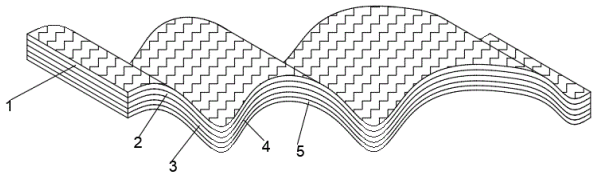

21: 2023/02762. 22: 2023/02/27. 43: 2023/05/02
51: G06F
71: Northeast Normal University
72: Tong zhijun, Liao xiaoyu, Luo xiaolong, Liu xingpeng, Zhang jiquan

54: NOVEL WEBGIS ARCHITECTURE BASED ON THE WEB SERVER SIDE

00: -

The invention discloses a novel WebGIS architecture based on the Web server side, and it comprises a server side and a client side, wherein the server side comprises a Web server side, which is used for accessing and publishing application software; And a data server side, which is responsible for publishing spatial data with different formats in the form of Xml stream; The client side includes a client-side browsing program of a specific Web application developed according to different RIA platforms; and the client side also comprises a GIS business model library, which works with an embedded browser program in a component package conforming to component standards; The GIS business model library comprises a GIS basic map service functional layer and a GIS spatial analysis functional layer. According to the invention, the economic cost and time cost of WebGIS development are greatly reduced; The WebGIS system developed based on this architecture will completely change the problem of poor user experience of WebGIS developed by traditional technology, with richer and more flexible human-computer interaction and more friendly interface implementation.

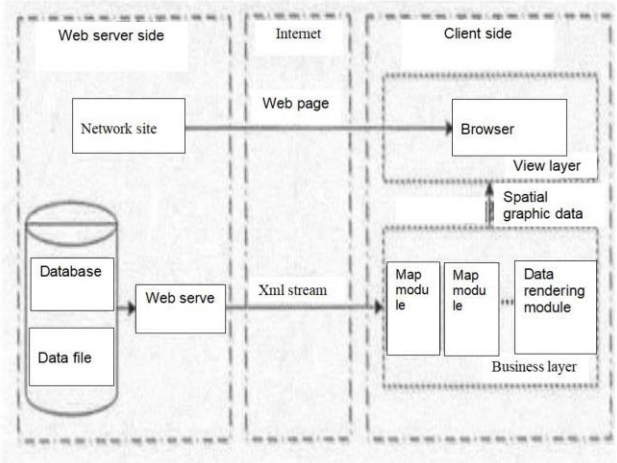

21: 2023/02773. 22: 2023/02/27. 43: 2023/05/02
51: B01D
71: Chongqing Research Academy of Eco-environmental Sciences, Chongqing Institute of Green and Intelligent Technology, Chinese Academy of Sciences, Sichuan University, Peking University
72: PENG, Chao, LI, Zhenliang, ZHANG, Sheng, WANG, Xiaochen, CHEN, Mulan, ZHAI, Chongzhi, YANG, Fumo, CHEN, Yang, ZHAI, Tianyu

54: DYNAMIC AEROSOL DILUTING AND GENERATING DEVICE AND ATOMIZING ASSEMBLY THEREOF

00: -

Disclosed is an atomizing assembly, which includes a heating chamber, an exhaust channel and a feeding chamber, where the heating chamber is fixed on one side of the feeding chamber, and the exhaust channel is detachably connected to the upper end of the heating chamber; an atomizing tube, a liquid suction tube and a heating device are arranged in the heating chamber; a corrugated tube body is fixed in the feeding chamber, a liquid inlet end of the corrugated tube body is connected with a liquid-phase raw material source, and an liquid outlet end of the corrugated tube body is connected with an open end of the atomizing tube. The present invention can reduce the liquid feeding rate of liquid-phase raw materials, ensure that the liquid-phase raw materials are evenly mixed, and avoid the problem of excessive liquid leakage caused by unreasonable liquid feeding of the liquid-phase raw materials.

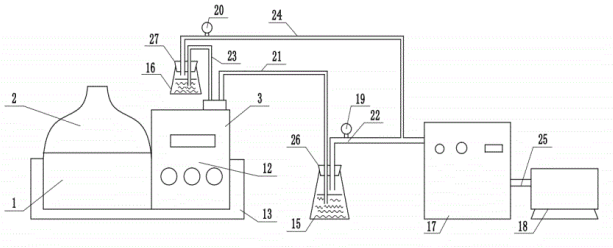

21: 2023/02774. 22: 2023/02/27. 43: 2023/05/02
51: B07B
71: Hebei GEO University
72: LIU, Shupeng, ZHANG, Xiaowei
54: MINERAL PROCESSING AND SORTING DEVICE
00: -
The present invention discloses a mineral processing and sorting device, comprising a processing box, a charging hopper and a discharging hopper, wherein the charging hopper is fixedly communicated with a top part of the processing box, and the discharging hopper is fixedly communicated with a bottom part of the processing box; in the present invention, by arranging screening hopper, buffer rods, buffer plates, buffer springs and rocking assembly, ores can be kept moving during screening without blocking screen holes, thus achieving a better screening effect; a dust removal assembly can adsorb and purify dusts generated in the screening process, so as to prevent the dusts from being inhaled by workers and affecting health thereof.

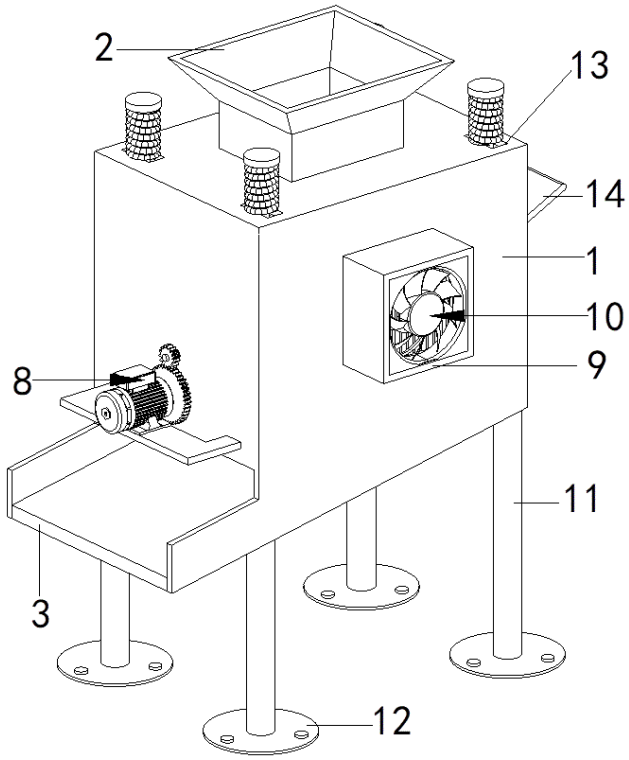

21: 2023/02775. 22: 2023/02/27. 43: 2023/05/02
51: C09C
71: Anhui Science and Technology University
72: GUO, Yu, CHENG, Nianshou, DING, Ran, CHEN, Junhua, DING, Zhijie, GUO, Teng, ZHOU, Yongsheng, YAN, Haoran
54: ULTRAFINE ELECTRONIC-GRADE COMPOSITE QUARTZ POWDER WITH LOW EXPANSION RATE AND HIGH THERMAL CONDUCTIVITY AND PRODUCTION METHOD THEREFOR
00: -
Disclosed are an ultrafine electronic-grade composite quartz powder with a low expansion rate and high thermal conductivity and a production method therefor. The production method includes: adding sodium silicate and a complexing agent into crystalline quartz powder, performing grinding, crystallization spheroidizing and purifying, and then washing the quartz powder to obtain a spheroidized crystalline semi-finished product; then compounding the spheroidized crystalline semi-finished product with angular crystalline quartz powder, fused silica micropowder and spherical silica micropowder to obtain mixed powder, adding surface modification mixed liquid for coating modification, then performing discharging after heat preservation ball milling, performing washing and drying to obtain composite

silica micropowder; and performing high-intensity magnetic separation and precise classification on the composite silica micropowder to obtain ultrafine electronic-grade composite quartz powder. The composite quartz powder has the advantages of the low expansion rate and the high thermal conductivity

---

21: 2023/02776. 22: 2023/02/27. 43: 2023/05/02
51: A61K
71: Zaozhuang University, Zaozhuang Xingmu Biotechnology Co., Ltd.
72: ZHENG, Dandan, WANG, Jinglong, MA, Jinghan, ZHANG, Qiuju, CHEN, Huixin, LIN, Shuqi, CHEN, Li, WANG, Jian
54: FLORFENICOL SOLUBLE POWDER AND PREPARATION METHOD THEREFOR
00: -
The present invention provides a florfenicol soluble powder and a preparation method therefor, and belongs to the technical field of pharmaceutical preparations. The florfenicol soluble powder includes 100 parts by weight of florfenicol and 700 - 1100 parts by weight of a carrier. The carrier includes any two of poloxamer 188, polyethylene glycol 4000, polyethylene glycol 6000 and Polyvinyl Pyrrolidone k30. By taking the carrier including any two of poloxamer 188, polyethylene glycol 4000, polyethylene glycol 6000 and PVPk30 as a carrier for florfenicol, florfenicol is dispersed in the carrier under the combined action of the two auxiliary materials, so that the particle diameter of florfenicol decreases, the dispersity of florfenicol is improved, and furthermore, the solubility of florfenicol can be improved. Results of embodiments show that the solubility of florfenicol provided by the present invention is 4 - 5 times that of a florfenicol active pharmaceutical ingredient.

21: 2023/02777. 22: 2023/02/27. 43: 2023/05/12
51: H04N
71: Jiaxing Nanyang Polytechnic Institute
72: Lingyu Xu, Xin Yang, Xian Pan, Libo Ding
54: A MONITORING DEVICE AND A SECURITY MONITORING SYSTEM BASED ON ARTIFICIAL INTELLIGENCE
00: -
The invention relates to the technical field of monitoring device, in particular to a monitoring device and a security monitoring system based on artificial intelligence. It includes a security camera, the front end of the security camera is fixed with two groups of plate, plate is arranged above the lifting frame, the surface of the lifting frame is connected with a screw, screw top is connected to the rotating shaft of the servo motor, the servo motor is fixed at the top of the security camera. The surface of the lifting frame is installed with a cleaning plate. When the lifting frame is driven by a screw, the cleaning plate cleans the front end lens of the security camera; The beneficial effect of the monitoring device and the security monitoring system based on artificial intelligence are as follows: after the screw is driven by the servo motor to rotate, the screw drives the lifting frame to rise and fall, so as to drive the cleaning plate to clean the mud adhering to the lens of the security camera and realize the timely cleaning of the lens of the security camera.

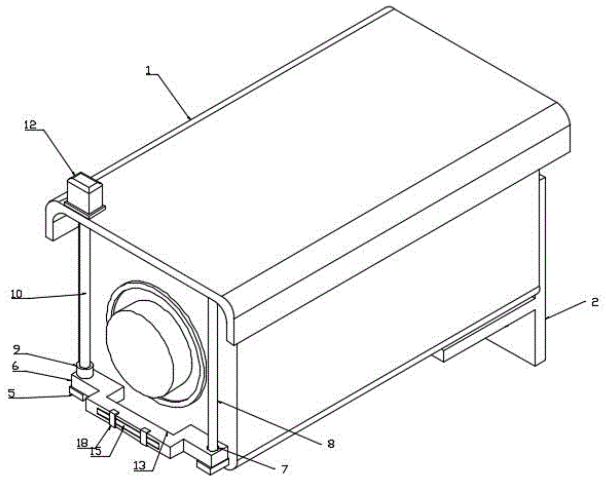

21: 2023/02778. 22: 2023/02/27. 43: 2023/05/12
51: G01N
71: Jinan University, Guangdong Guangzhou Environmental Monitoring Center Station
72: CHENG, Chunlei, MAO, Liyuan, LIU, Sulin, LI, Mei, PEI, Chenglei, ZHANG, Qianhua
54: METHOD FOR ANALYZING FORMATION MECHANISM OF ORGANIC AEROSOL
00: -
Disclosed is a method for analyzing the formation mechanism of organic aerosol based on single particle mass spectrometry, including the following steps: collecting atmospheric particulates at a sampling site by using a single particle aerosol mass spectrometer; then identifying the number concentration, the relative number concentration, the mixing state and the mass spectrum characteristics

of different kinds of aerosol single particles according to a characteristic ion method; performing correlation analysis with gaseous pollutants and meteorological parameters in an atmospheric environment; and comprehensively considering influence of the gaseous pollutants and the meteorological parameters on a generation process of the aerosol to illustrate the formation mechanism of the organic aerosol. According to the method, single particle data measured by the single particle aerosol mass spectrometer and extracted as well as the gaseous pollutants and the meteorological parameters in the atmosphere are comprehensively analyzed, the operation is easy and the accuracy is high.

21: 2023/02779. 22: 2023/02/27. 43: 2023/05/12
51: H04N
71: Jiaxing Nanyang Polytechnic Institute
72: Lingyu Xu, Xin Yang, Xian Pan, Libo Ding
54: AN ARTIFICIAL INTELLIGENCE ACCESS CONTROL SYSTEM WITH A HUMAN FACE RECOGNITION DEVICE
00: -
The invention relates to the technical field of access control, in particular to a face recognition device for artificial intelligence access control system. It includes an intelligent door an artificial intelligence access control system using face recognition device ban, the bottom end of the intelligent access control is fixed with a sleeve, sleeve sleeve is located at the top of the supporting rod, one end of the sleeve is provided with an installation slot, the installation slot is inserted into the internal activities of the brake clamp block, one end of the brake clamp block is inserted into the slot, the slot is opened on the surface of the supporting rod, and the sleeve of the tube body is provided with a push ring, Push ring to brake clamp block limit; The beneficial effects of the artificial intelligence access control system are as follows: the artificial intelligence access control system is equipped with a sleeve sleeve connection between the intelligent access control system and the supporting rod with a face recognition device, and the brake clamp block is limited by pushing ring. This can realize that the brake clamp block is connected between the sleeve and the supporting rod, so when disassembling and repairing the intelligent access control, only the dislocation of the push ring and the brake clamp block can be removed from the top of the intelligent access control connected sleeve from the supporting rod, people do not need to remove the pad, its operation is simple and convenient.

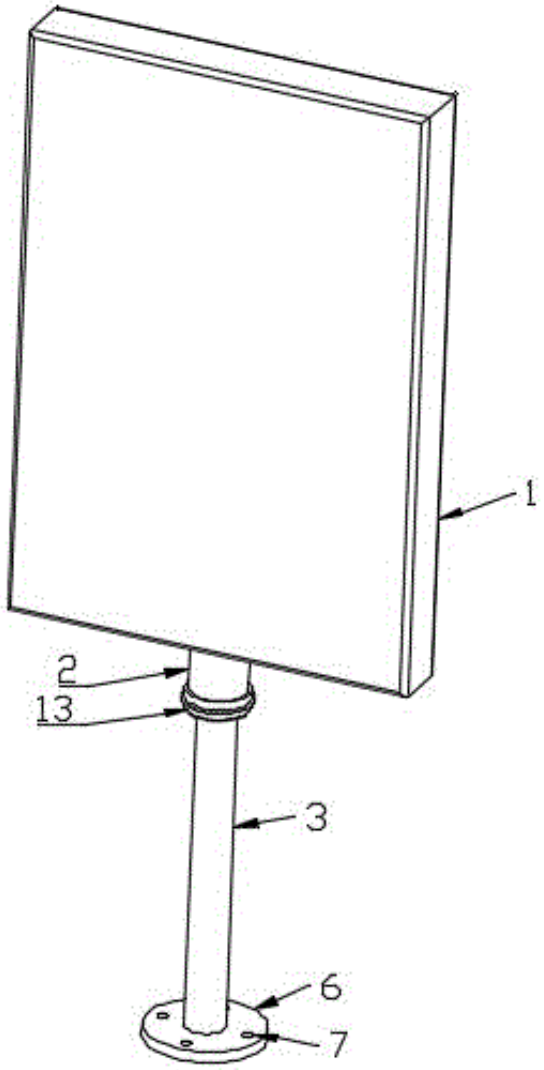

21: 2023/02780. 22: 2023/02/27. 43: 2023/05/12
51: A61B
71: The People's Hospital of Gaozhou
72: Ronghua Li, Chundong Yang, Mingzhi Zhu, Fengqing Zou
54: AUTOMATIC PRESSURE HEMOSTATIC BANDAGE FOR HEMODIALYSIS PATIENTS
00: -
The invention discloses an automatic pressure hemostatic bandage for hemodialysis patients, in

particular relating to the technical field of medical equipment. It comprises a pressurized tourniquet shell, the number of the pressurized tourniquet shell is two, two pressurized tourniquet shells are provided with a transmission ring, two pressurized tourniquet shells are provided with eight first connecting blocks. By pressurizing the tourniquet shell, the invention starts the data detector to run and transmits the gas to the transmission ring through the ventilation hose. At this time, the airbag rises to squeeze the wound on the patient's arm for a second time. In this way, the tourniquet shell is pressed to clamp the wound on the patient's arm in turn, and the combination of the airbag and the pressing supporting plate firmly clamp the patient's arm. This avoids gaps and twists in the shell of the pressurized tourniquet when the patient moves his or her arm. By squeezing the patient's wound, the blood vessels near the wound stop flowing outward, preventing the patient's arm from bleeding again and reducing the secondary damage to the patient.

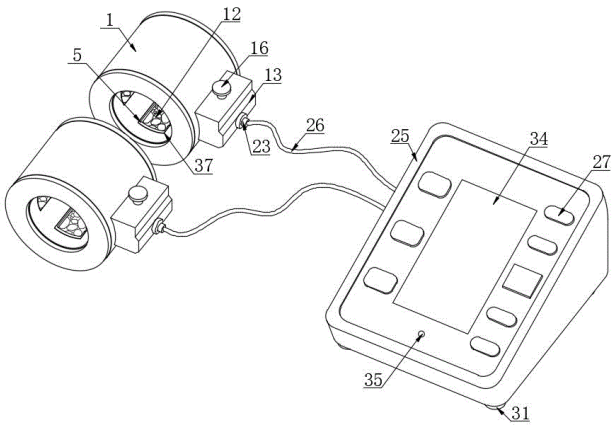

21: 2023/02781. 22: 2023/02/27. 43: 2023/05/12
51: A62B
71: Zhejiang University of Science and Technology
72: Zhenyu Zhang, Chennan Hu, Ce Shi, Hongze Shi, Xin Jin, Pengfei Cheng

54: AUTONOMOUS MOVING-TYPE FIRE ESCAPE TILE DEVICE

00: -

The invention belongs to the technical field of fire escape equipment, in particular to an autonomous moving-type fire escape floor tile device. It comprises a plurality of crawler type floor tiles, two adjacent crawler type floor tiles are connected through a supportinging connector; Each crawler type floor tile comprises a driving wheel, a driven wheel, a conveyor belt rotating in coordination with the driven wheel and the driven wheel, a fan placement platform on both sides of the conveyor belt, a tip belt above the fan placement platform, and a plurality of fans between the tip belt and the fan placement platform; The prompt belt is provided with a plurality of indicators and a plurality of air outlets corresponding to the fan. The invention has the characteristics of convenient hand perception for visually impaired persons and improving the probability of quick escape.

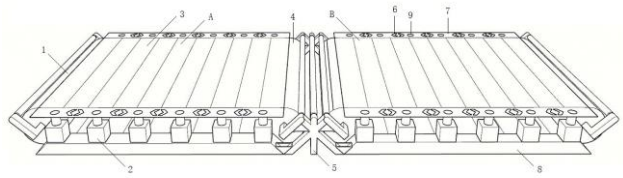

21: 2023/02782. 22: 2023/02/27. 43: 2023/05/02
51: F04B
71: Zhejiang University of Science and Technology
72: Zhenyu Zhang, Ce Shi, Hongze Shi, Chennan Hu, Xin Jin, Pengfei Cheng

54: WELLBORE INTELLIGENT WARNING METHOD AND SYSTEM BASED ON BP NEURAL NETWORK AND KALMAN FILTER

00: -

The invention belongs to the technical field of mine shaft safety, in particular relates to a shaft intelligent early warning method and system based on BP neural network and Kalman filter. It includes the following steps: S1. Collection of calendar sample data, and normalization of sample data; S2. Establish BP neural network model and initialize it; S3. Training and testing of BP neural network model; S4. Adjust BP neural network model parameters, and repeat Step S2 to Step S3 process, select the output value of the optimal BP neural network model as the temperature warning value at the next time; S5. The predicted value of temperature at the next moment, the predicted value of smoke concentration, the optimal estimated value of temperature at the current moment and the optimal estimated value of smoke concentration are obtained according to the Kalman filter model. S6. Get the specific alarm point for alarm and point to sprinkler fire. The invention has the characteristics of improving the accuracy of disaster warning and enhancing mine safety.

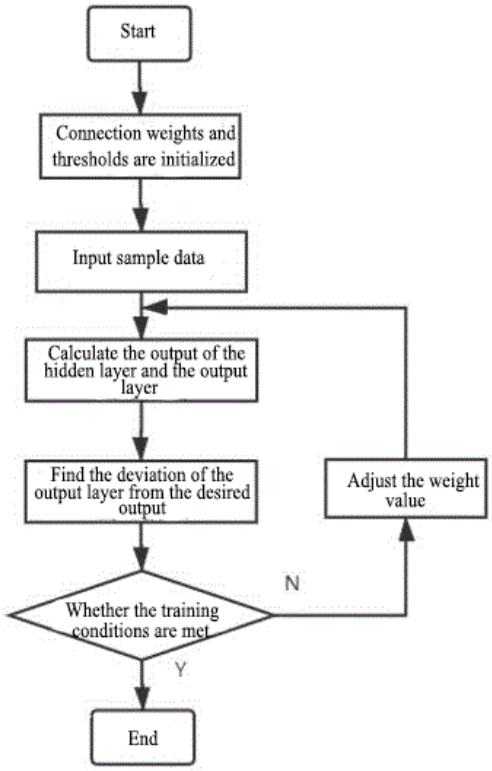

21: 2023/02783. 22: 2023/02/27. 43: 2023/05/02
51: B01J; C07C
71: HuangShan University
72: CHANG Guanru, ZHOU Quan, FANG Huiping, QI Zhaopeng, CHEN Long, WU Kun
54: CATALYST FOR OLEFIN OLIGOMERIZATION AND ITS PREPARATION METHOD
00: -
The present invention discloses a catalyst for olefin oligomerization and its preparation method, relating to the technical field of organic synthesis. The present invention successfully prepares four large volume iminopyridyl Ni (II) and Pd (II) complexes containing naphthalene or benzothiophene groups, and studies their application in olefin oligomerization. The prepared nickel palladium complexes usually show well catalytic activity for ethylene oligomerization, providing hyperbranched oligomers with various microstructures.

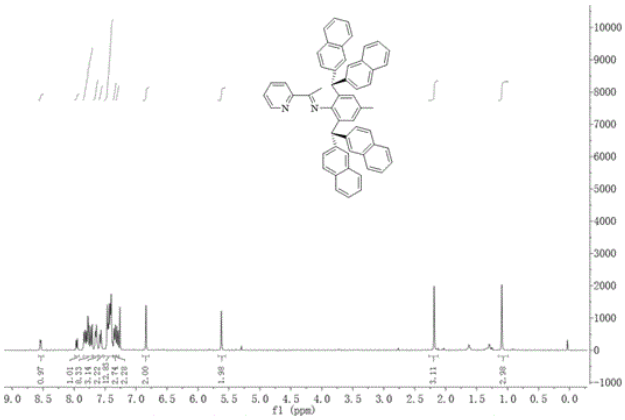

21: 2023/02784. 22: 2023/02/27. 43: 2023/05/02
51: A23K
71: Institute of Animal Science and Veterinary Medicine, Shandong Academy of Agricultural Sciences, Shandong Linqu County Government Affairs Service Center
72: WANG Cheng, WANG Yanping, LI Xiansheng, HAO Lihong, JIANG Fugui
54: PREPARATION METHOD OF FEED MULBERRY SILAGE
00: -
The invention discloses a preparation method of feed mulberry silage, which uses silage additives containing bacteria and enzymes to silage mulberry feed in a way of enzyme and bacteria synergistic fermentation, and the pH of the silage-stabilized feed mulberry is below 4.0, thus realizing long-term storage, solving the technical problem that the feed mulberry green feed is difficult to store, and meanwhile, the fermented feed is soft and juicy, sweet in taste, slightly sour, basically the same in color as before storage, and good in palatability.

21: 2023/02785. 22: 2023/02/27. 43: 2023/05/02
51: B01J; C07C
71: HuangShan University
72: CHANG Guanru, QI Zhaopeng, ZHOU Quan, CHEN Long, XING Nannan, WU Kun
54: NICKEL AND PALLADIUM COMPLEX WITH N-TRIPHENYLIMINE PYRIDINE AS LIGAND, PREPARATION METHOD AND APPLICATION THEREOF
00: -
The invention belongs to the technical field of ethylene polymerization catalysis, and in particular to a nickel and palladium complex with N-triphenylimine pyridine as ligand, preparation method and application thereof. Nickel (II) and

palladium (II) complexes with N-triphenylimine pyridine as ligands prepared by using the N-triphenyliminopyridine ligand may be used as catalysts for olefin polymerization, and any one or more of ethylene, propylene or alpha-olefins may be catalytically polymerized to obtain low molecular weight and highly branched polyolefins or olefin-acrylate copolymers, having broad application prospects in the production of functionalized polyolefins.

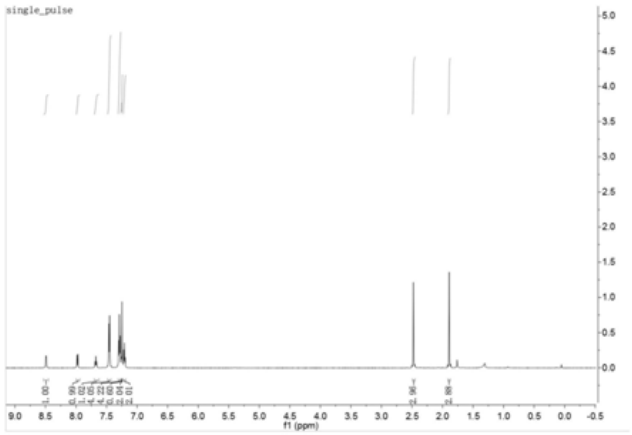

21: 2023/02786. 22: 2023/02/27. 43: 2023/05/02
51: C22C
71: Xiangtan University
72: Zhu Daibo, Zhao Zhiya, Zou Si, Jiang Chaohua, Li Jingxin, Li Juan, Zhang Yating
54: PREPARATION METHOD FOR BERYLLIUM COPPER ALLOY STRIP MATERIAL WITH HIGH BERYLLIUM CONTENT
00: -
The invention relates to a preparation method for beryllium copper strip material with high beryllium content, and relates to a method for preparing beryllium copper strip material. The purpose of the invention is to solve the problems of low beryllium content in the existing beryllium copper strip materials, more pores in the beryllium copper strip blank, poor microstructure compactness, macro segregation and low production efficiency. Methods: 1. Semi-continuous blank preparation; 2. Extrusion; 3. Rolling and pickling; 4. Finish rolling, annealing and winding; Finally, the the high beryllium copper strip material for the dynodes of photomultiplier. According to the high beryllium copper strip material for the dynodes of photomultiplier prepared in the invention, the peak secondary electron emission coefficient is 8.4~10.8, tensile strength is 645.4~670.2MPa, yield strength is 314.8~360.9MPa and elongation at break is 15~19%, respectively. The invention can obtain the high beryllium copper strip material for the dynodes of photomultiplier.

21: 2023/02787. 22: 2023/02/27. 43: 2023/05/10
51: G06Q
71: Yangzhou University
72: LI Sheng, ZHANG Tangjie, WANG Haixin, YE Lina, YU Xinlei, YANG Daiqi, HONG Xingping
54: INTELLIGENT DIAGNOSIS SYSTEM FOR PIG DISEASES BASED ON DATABASE
00: -
The invention belongs to the technical field of pig breeding, and particularly discloses an intelligent diagnosis system for pig diseases based on a database, which comprises a case map functional area module for popularizing professional knowledge about various diseases and pathogens of pigs for users; The functional area module of intelligent diagnosis of pig diseases is used to diagnose the diseases of suspected pigs, obtain possible diseases by traversing the relevant information of pigs, and describe the diseases from the aspects of overview, symptoms, transmission, diagnosis and prevention and control; Common disease function area module, which is used to provide users with common disease search and classified access to common diseases; Can comprehensively and systematically grasp and understand the disease, so that users can take timely measures to treat the disease; The online diagnosis and treatment functional area module is used to provide a service platform for users to consult with veterinarians online; The pathological report functional area module is used for recording and storing the disease situation of the user's pig farm, and the invention solves the problem that farmers can't solve pig diseases by themselves in the prior art.

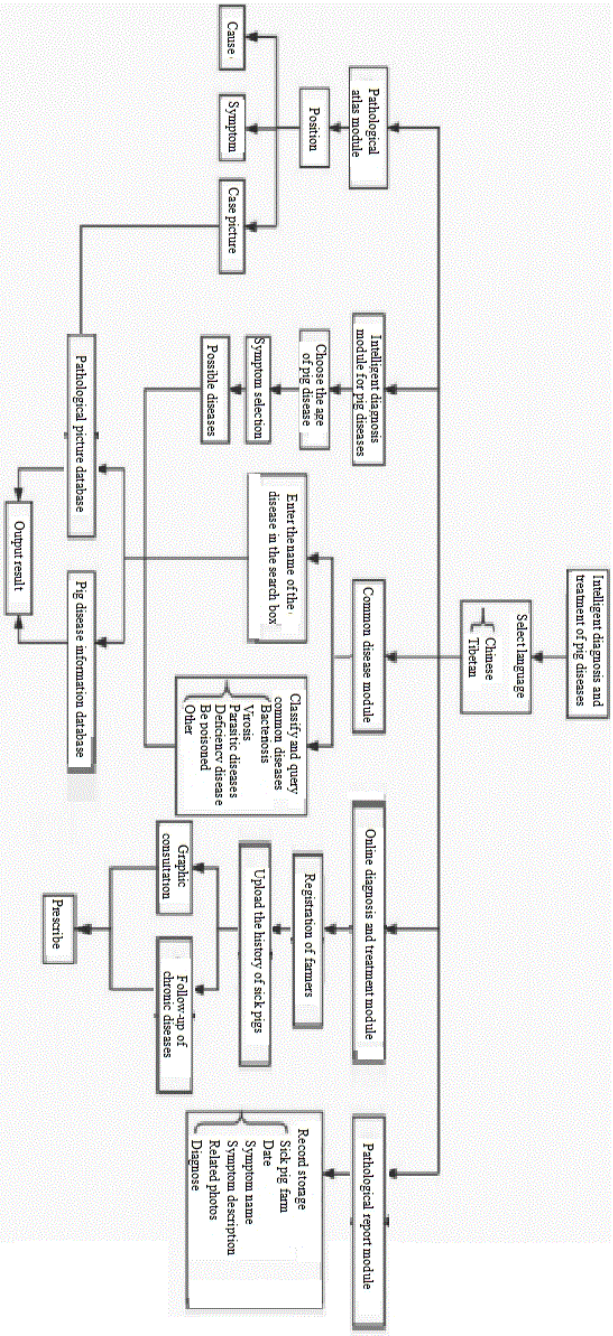

21: 2023/02788. 22: 2023/02/27. 43: 2023/05/02
51: A01C; A01G
71: Research Institute of Non-timber Forestry, Chinese Academy of Forestry
72: LI, Taishan, DU, Gaigai, ZHU, Gaopu, ZHAO, Han, LIU, Huimin, WANG, Lin, LI, Tong, JIANG, Fengchao, SHAN, Xinyue, HUANG, Yanli, FENG, Luying, WANG, Zhiyong, QIN, Meiying, MAO, Shuaiping, YANG, Shaobin, Wuyuntana, LI, Fangdong

54: RAPID CULTIVATION METHOD FOR APRICOT GRAFTED SEEDLINGS IN HUANG-HUAI WATERSHED AND METHOD FOR DRY LAND AFFORESTATION
00: -
Disclosed is a method for rapid cultivation of apricot grafted seedlings in Huang-Huai watershed and dry land afforestation.

21: 2023/02789. 22: 2023/02/27. 43: 2023/05/02
51: A01G
71: Research Institute of Non-timber Forestry, Chinese Academy of Forestry
72: LI, Taishan, DU, Gaigai, ZHU, Gaopu, ZHAO, Han, WANG, Lin, LIU, Huimin, JIANG, Fengchao, MO, Wenjuan, LI, Tong, SHAN, Xinyue, HUANG, Yanli, FENG, Luying, WANG, Zhiyong, SUN, Xiying, ZUO, Siyu, MAO, Shuaiping, YANG, Shaobin, Wuyuntana, LI, Fangdong

54: METHOD FOR MUTAGENESIS OF GRAFTED HYBRIDS BETWEEN PEACH GENUS AND APRICOT GENUS
00: -
Disclosed is a method for mutagenesis of grafted hybrids between a peach genus and an apricot genus.

21: 2023/02790. 22: 2023/02/27. 43: 2023/05/02
51: C07C
71: Inner Mongolia Yidong Dongyan Technology Co., Ltd.

72: XU, Dongsheng, HAO, Haigang, ZHAI, Chenglong

54: METHANOL AND AMMONIA COPRODUCTION METHOD

00: -

The present invention provides a methanol and ammonia coproduction method, including the following steps: converting and purifying crude gas successively to obtain purified gas; compressing the purified gas for the first time, and allowing a first methanol synthesis reaction to obtain methanol and purge gas; wherein the temperature of the first methanol synthesis reaction is 225-230 degrees Celsius, and the pressure is 4.0-5.5 MPa; mixing the purge gas with nitrogen, compressing the mixture for the second time, and allowing a second methanol synthesis reaction and a hydrocarbylation reaction of the obtained gas mixture successively to obtain methanol and refined gas; compressing the refined gas for the third time, and allowing an ammonia synthesis reaction to obtain liquid ammonia. Nitrogen distribution before methanol synthesis is adjusted to nitrogen distribution after the first methanol synthesis reaction, so that compression power consumption in the whole process can be reduced.

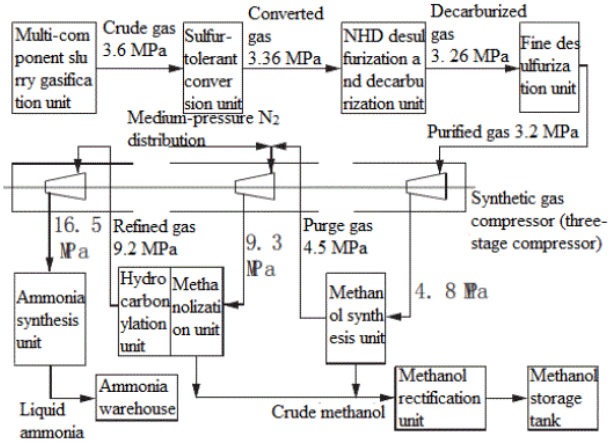

21: 2023/02791. 22: 2023/02/27. 43: 2023/05/02

51: A62B

71: Zhejiang University of Science and Technology

72: Zhenyu Zhang, Hongze Shi, Chennan Hu, Ce Shi, Pengfei Cheng, Xin Jin

54: A SENSING AND MOVABLE FLOOR TILE DEVICE FOR FIRE ESCAPE

00: -

The invention belongs to the technical field of fire escape equipment, in particular to a perceptive and movable floor tile device for fire escape. It comprises a plurality of crawler type floor tiles, two adjacent crawler type floor tiles are connected through a supporting connector; Each crawler type floor tile comprises a driving wheel, a driven wheel, a conveyor belt rotating in coordination with the driven wheel and the driven wheel, a fan placement platform on both sides of the conveyor belt, a tip belt above the fan placement platform, and a plurality of fans between the tip belt and the fan placement platform; The prompt belt is provided with a plurality of indicators and a plurality of air outlet corresponding to the fan; The tracked floor tile includes at least one straight tracked floor tile and at least one turning tracked floor tile. The invention has the characteristics of convenient hand perception for visually impaired persons, improving the probability of quick escape and being able to turn in the passing path.

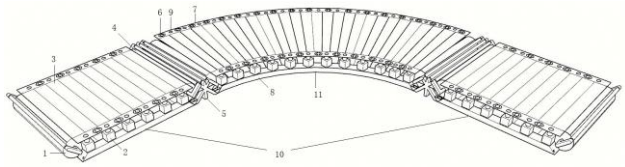

21: 2023/02804. 22: 2023/02/27. 43: 2023/05/02

51: C23C

71: Shenyang University of Technology

72: ZHAO,Te, ZHANG,Song, WU,Hao, WANG,Dingchen, WU,Chenliang, ZHANG,Chunhua

54: A MATERIAL AND METHOD FOR PREPARING WEAR-RESISTANT IN-SITU TIC REINFORCED TITANIUM MATRIX COATING

00: -

The invention relates to a material and method for preparing wear-resistant in-situ TiC reinforced titanium matrix coating. Using TC4 powder and Cr3C2 powder as raw materials, the TiC reinforced titanium matrix coating prepared by plasma surfacing welding on the surface of TC4 titanium alloy can form a dense metallurgical bond with no pores, deformation and cracks. The in-situ formed TiC particles have high hardness, high melting point and excellent high temperature stability, which can make the coating higher than 1000 HV microhardness and effectively improve the surface hardness and deformation resistance of the material. The anchoring effect on hard TiC makes it difficult to peel off from the substrate, so the TiC reinforced

titanium matrix coating has excellent cutting resistance, furrow resistance and plastic deformation resistance. It can effectively protect the TC4 substrate and prolong the service life of TC4 alloy components.

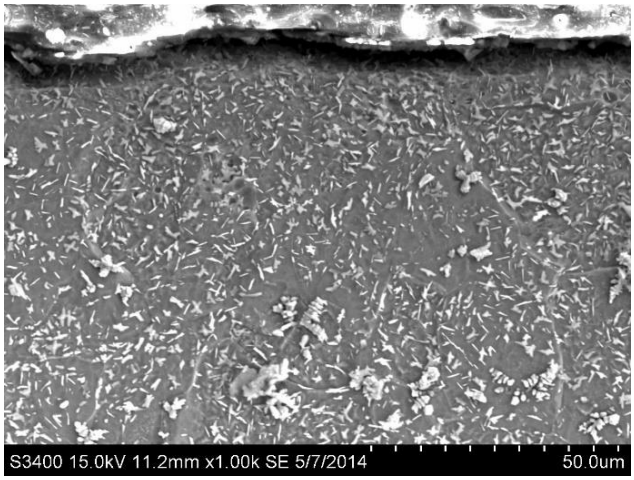

21: 2023/02805. 22: 2023/02/27. 43: 2023/05/02
51: H04B
71: Dr.D.David Neels Ponkumar, Dr.M.Supriya, Dr.P.J.Beslin Pajila, Er.S.Arul Kirubaharan, Dr.S.P.Valan Arasu, Mrs.G.Shanmuga Priya, Mr.A.Niyas Ahamed, Er.Rimlon Shibi, Dr.K.Ramanan, Dr.I.S. Hephzi Punithavathi
72: Dr.D.David Neels Ponkumar, Dr.M.Supriya, Dr.P.J.Beslin Pajila, Er.S.Arul Kirubaharan, Dr.S.P.Valan Arasu, Mrs.G.Shanmuga Priya, Mr.A.Niyas Ahamed, Er.Rimlon Shibi, Dr.K.Ramanan, Dr.I.S. Hephzi Punithavathi
54: IOT ENABLED ENERGY EFFICIENT ADVANCED 6G COMMUNICATION NETWORK SYSTEM
00: -
Aspects of present disclosure relate to an Internet of Things (IoT) enabled energy efficient advanced 6G communication network system (100). The system (100) comprises of a tower (101) located on the outdoor of a building structure; a chief radio transceiver (102) arranged in the tower (101) for wireless radiocommunication through radio waves; a cover (103) arranged on top of the tower (101); a pillar (104) arranged on the tower (101); a secondary radio transceiver (106) placed inside the building structure for wireless radiocommunication through radio waves; and atleast one sensor (107) capable of sensing human body inside the building structure. The pillar (104) is having reflective surface for transmission of radio waves. The system (100) comprises of an aeration system (105) situated in the tower (101) for circulating cool air.

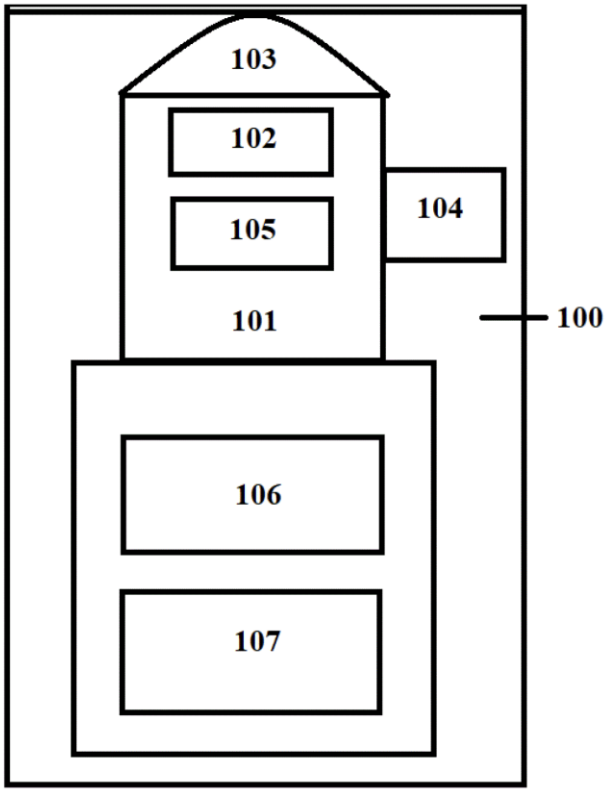

21: 2023/02812. 22: 2023/02/27. 43: 2023/05/02
51: C01F
71: Shenyang University of Technology
72: WU, Yusheng, LI, Laishi, LIU, Ning, LIU, Jinliang
54: A METHOD FOR COMPREHENSIVELY UTILIZING MAGNESITE
00: -
The disclosure relates to a method for comprehensively utilizing magnesite. The method includes the following steps: step 1: grinding the magnesite to pass the 100-mesh sieve, shake and separate the magnesite into fine ore; step 2: heating the ammonium sulfate solid to decompose to prepare the ammonium bisulfate solution; step 3: adding the fine ore obtained in step 1 into the ammonium bisulfate solution obtained in step 2 and mixing them to prepare the ore pulp; step 4: heating the ore pulp to react, adding oxalic acid after the reaction, and performing the first solid-liquid separation after uniform reaction to obtain the crude liquid and leaching residue; step 5: sequentially introducing air and part of ammonia gas generated in step 2 into the obtained crude liquid, and then

performing the second solid-liquid separation to obtain pure magnesium ion-containing solution and solid slag containing aluminum and iron; step 6: simultaneously introducing the ammonia gas generated in step 2 and the carbon dioxide gas generated in step 4 into the magnesium ion-containing solution obtained in step 5, and then performing the third solid-liquid separation after the reaction to obtain basic magnesium carbonate and ammonium sulfate solution. The disclosure achieves the purpose of comprehensive ecological treatment of magnesite.

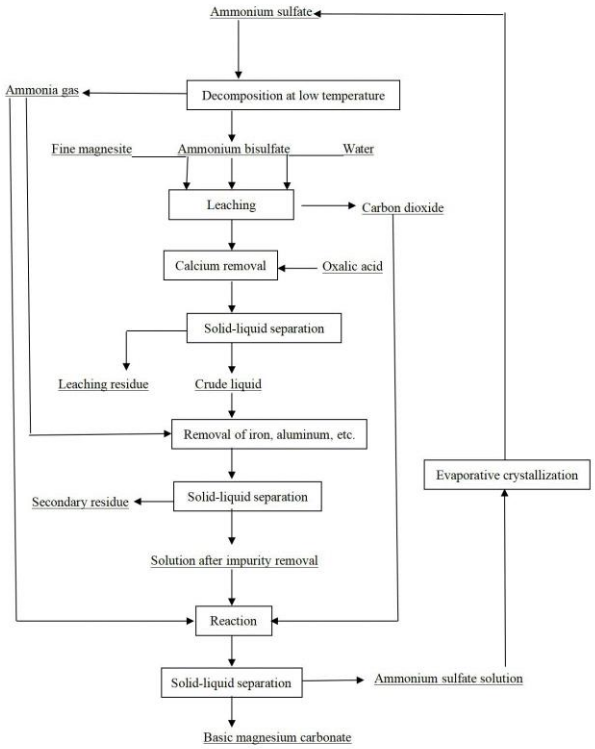

21: 2023/02813. 22: 2023/02/27. 43: 2023/05/12
51: G06T
71: Hangzhou Apogee Tech Co., Ltd.
72: Ming Ge, Jingxue Shen, Jiang Wei
54: PRODUCT SURFACE DEFECT DETECTION METHOD AND DEVICE BASED ON DEEP LEARNING AND MACHINE VISION
00: -
The invention relates to a product surface defect detection method and device based on deep learning and machine vision. The invention aims to provide a product surface defect detection method and device based on deep learning and machine vision. According to the technical scheme, the product surface defect detection method based on deep learning and machine vision is characterized by comprising the steps that a surface image of a to-be-detected product is collected in a line scanning mode of an industrial camera; defect feature preprocessing is carried out on the collected image in real time, and whether defects exist in the surface image of the to-be-detected product or not is rapidly determined; defect severity identification and defect type classification are performed on images with defects by utilizing the trained deep convolutional neural network model, wherein the trained deep convolutional neural network model is formed by carrying out transfer learning, transformation and training on a classic neural network model Inception-v3. The product surface defect detection method and device are suitable for the fields of machine vision and image recognition.

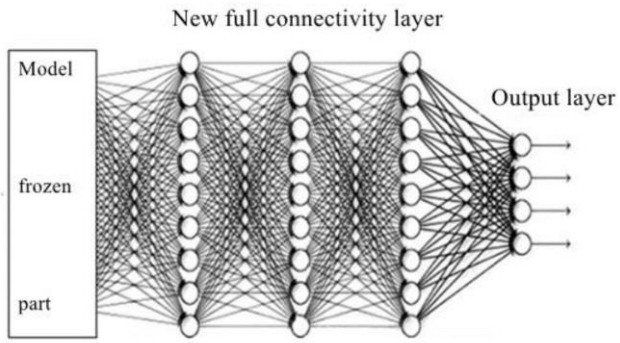

21: 2023/02814. 22: 2023/02/27. 43: 2023/05/02
51: C23C
71: Shenyang University of Technology
72: ZHAO,Te, ZHANG,Song, CHEN,Shengyuan, WANG,Tao, WU,Chenliang, ZHANG,Chunhua
54: A METHOD FOR PREPARING MARTENSITIC STEEL COATING WITH HIGH HARDNESS AND CAVITATION RESISTANCE
00: -
The invention relates to a method for preparing martensitic steel coating with high hardness and cavitation resistance. Using 4Cr13 wire with diameter of 1.0 - 1.6 mm as raw material, surfacing welding was carried out on the pulse cold welding system. Before the preparation of the coating, the 304 stainless steel substrate was fully polished to remove corrosion, and the surfacing welding was carried out by multi-pass lap surfacing welding. The obtained 4Cr13 martensitic steel coating and 304 stainless steel substrate formed a dense

metallurgical bond. The fusion line is smooth and there are no defects such as pores, oxide inclusions and cracks, and there are no abnormally thick columnar crystals caused by high heat input. The rapid solidification characteristics of pulse cold welding process can effectively avoid the coarsening of microstructure and the precipitation of harmful intermetallic compounds. In addition, the solid solution of Cr element in the coating can provide solid solution strengthening effect and improve corrosion resistance. A large number of hard carbides such as Cr23C6 and Cr7C3 are dispersed around ferrite so that 4Cr13 martensitic steel coating can have both toughness and strength and effectively resist damage caused by wear and cavitation erosion. It can protect 304 stainless steel substrate and effectively prolong the service life of 304 stainless steel valve seals.

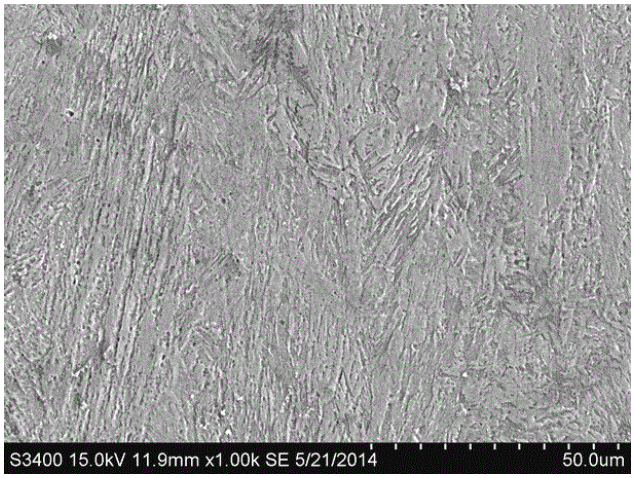

21: 2023/02815. 22: 2023/02/27. 43: 2023/05/02
51: C23C
71: Shenyang University of Technology
72: XU,Tongzhou, HUANG,Yichi, WANG,Rui, ZHANG,Song, WU,Chenliang, ZHANG,Chunhua
54: A POWDER AND METHOD FOR PREPARING A TIN-BASED BABBITT ALLOY/CARBON FIBER COATING
00: -
The invention relates to a powder and method used for laser cladding of tin-based Babbitt alloy/carbon fiber coating. The tin-based Babbitt alloy/carbon fiber powder is characterized by nominal composition in wt.%: 0.75 - 1.0 C, 4.25 - 5.0 Ni, 11.0 - 12.0 Sb, 6.0 - 7.0 Cu and balance Sn. A method for preparing tin-based Babbitt alloy/carbon fiber coating: Step 1: vacuum smelting, gas atomization and sieving; Step 2: drying; Step 3: polish, clean and dry the low-carbon steel substrate, and then the powder is prefabricated on the surface of the low-carbon steel substrate; Step 4: Conduct laser cladding. By using laser cladding technology and synchronous powder feeding method, a tin-based Babbitt alloy/graphite coating is prepared. The prepared Babbitt alloy/carbon fiber coating has uniform microstructure, good self-lubricating and wear behavior on the surface. It provides a novel powder and corresponding process method for the preparation of self-lubricating Babbitt alloy coating by laser cladding, which can be widely used in laser manufacturing and remanufacturing of essential components of heavy-duty bearing bush.

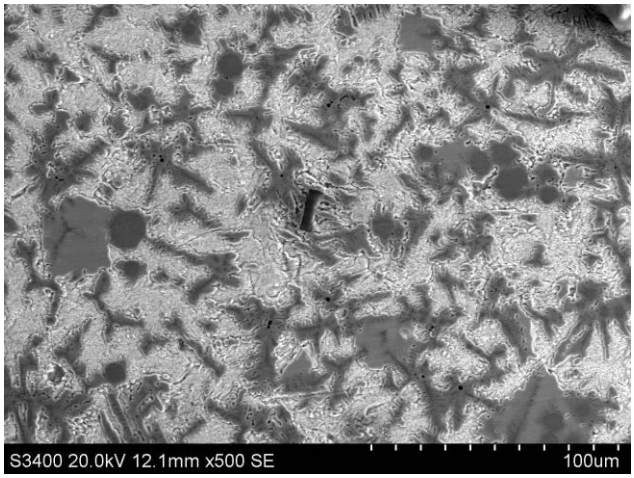

21: 2023/02816. 22: 2023/02/27. 43: 2023/05/02
51: C22C
71: Shenyang University of Technology
72: XU,Tongzhou, CAO,Bosheng, WANG,Tao, ZHANG,Song, WU,Chenliang, ZHANG,Chunhua
54: A POWDER AND TECHNICAL METHOD USED FOR LASER ADDITIVE MANUFACTURING OF MARAGING STEEL
00: -
The invention involves a powder and technical method used for laser additive manufacturing of maraging steel. The maraging steel powder is characterized by nominal composition in wt.%: 6.5 - 8.5 Ni, 12.0 - 15.0 Mo, 16.0 - 19.0 Co, 0.8 - 1.5 Ce/Y and balance Fe. A technical method for preparing maraging stainless steel using the powder used for laser additive manufacturing of maraging steel: Step 1: vacuum smelting, gas atomization and sieving; Step 2: drying; Step 3: polish, clean and dry the low alloy steel substrate, and then the powder is melted

and deposited on the surface of the low alloy steel substrate; Step 4: Conduct multiple laser melting and deposition. The as-deposited maraging steel specimens are homogeneous without airholes or other defects and observed the laser track with apparent squamose structure. The typical equiaxed grain are observed, and the grains are obviously refined with the increase of Mo element. The addition of Mo can effectively improve the thermal shock performance of materials.

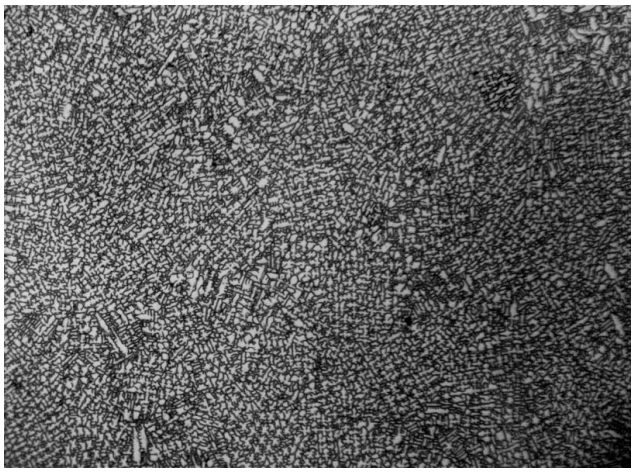

21: 2023/02817. 22: 2023/02/27. 43: 2023/05/02
51: C23C
71: Shenyang University of Technology
72: HUO,Renjie, ZHAO,Te, DU,Yi, ZHANG,Chunhua, WU,Chenliang, ZHANG,Song
54: A PREPARATION METHOD USED FOR A MODIFIED COATING OF DIRECTIONALLY SOLIDIFIED COLUMNAR CRYSTAL COBALT-BASED SUPERALLOY
00: -
The invention relates to a preparation method used for a modified coating of directionally solidified columnar crystal cobalt-based superalloy. In order to solve the problem of directionally solidified columnar crystal cobalt-based superalloy coating, an epitaxial high-energy electrospark deposition directionally solidified technology is proposed, CoCrWCHf welding wire doped with active element Hf is selected as raw material to prepare columnar crystal modified deposition layer. The advantages of the invention are: the prepared coating is a columnar crystal epitaxial growth coating. The columnar crystal grain is ultra-fine and grows vertically from the bonding interface directly to obtain an epitaxial coating with almost no thermal damage to the substrate, and has extremely obvious directionality. The bonding between the coating and the substrate is very firm, without cracks, and the superimposed interface between layers is very clear, and the structure is continuous and dense, mainly composed of Co solid solution is composed of Cr7C3 and C23C6 carbide phases, and the heat affected zone is narrow. the microstructure of different positions within the coating almost no difference. The stable and controllable structure can effectively protect the service life of superalloy members.

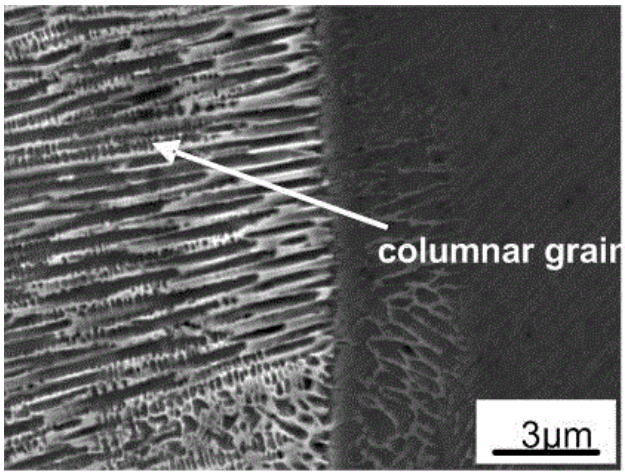

21: 2023/02819. 22: 2023/02/27. 43: 2023/05/17
51: G01J
71: PAUL JOSEPH DANIEL, KOVENDHAN MANAVALAN, CHODISETTI SURYA PRAKASARAO, AROCKIA KUMAR RAJU, HAZARIKA PRATIM, DSOUZA SLAVIA DEEKSHA
72: PAUL JOSEPH DANIEL, KOVENDHAN MANAVALAN, CHODISETTI SURYA PRAKASARAO, AROCKIA KUMAR RAJU, HAZARIKA PRATIM, DSOUZA SLAVIA DEEKSHA
54: A SYSTEM FOR BENDING AND TWISTING OF ULTRA-THIN FILMS COATED ON A FLEXIBLE SUBSTRATE
00: -
A System for Bending and Twisting of Ultra-Thin Films coated on a Flexible Substrate, comprises of: a base (102); a plurality of carriages (104) placed on the base (102); a plurality of motors (106) attached to a control wheel (108) via at least a gear; a pair of parallel thin copper rods (110) having one end fastened to shaft of the motor (106a) and other second to a clamp for placing the film; a crank shaft unit (112) for bending and twisting of the film for required duration, wherein a semi-circular movement of the shaft of the motor (106a) is converted into

linear bending and twisting of the thin film to induce flexibility in the film; and a controller unit (114) for generating a pulse width modulation signal after every defined interval of 15-25 ms having a defined length through a control wire to operate the plurality of motors (106).

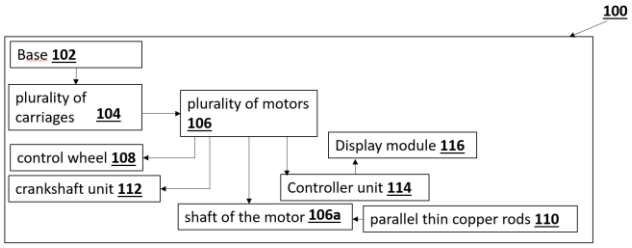

21: 2023/02821. 22: 2023/02/27. 43: 2023/05/17
51: G06N
71: Dr.Prasanalakshmi Balaji, Dr Kumarappan Chidambaram, Dr. Kavitha Dhandapani, Maryam A Halawi, Dr. Maheshkumar Veerasuraperumal Pauldurai, Mohammed Al Bratty, Dr. Mohamed Rahamathulla, Dr. Rajeswari Murugesan
72: Dr.Prasanalakshmi Balaji, Dr. Kavitha Dhandapani, Dr Kumarappan Chidambaram, Maryam A Halawi, Dr. Maheshkumar Veerasuraperumal Pauldurai, Mohammed Al Bratty, Dr. Mohamed Rahamathulla, Dr. Rajeswari Murugesan

54: A HONEY BADGER OPTIMIZED CONVOLUTIONAL NEURAL NETWORK SYSTEM IN RETINOPATHY AND A METHOD THEREOF

00: -

A Honey Badger optimized Convolutional Neural Network System (100) and a method (200) in Retinopathy, comprises of: a dataset collection module (102) for collecting a plurality of data from at least a database consisting of a plurality of retinal images; a pre-processing module (104) to remove noise and optimize pixel values of the plurality of retinal images through median filtering and Gabor filtering techniques; a feature extraction module (106) for segmenting blood vessels from the pre-processed image using super pixel mean orientation, wherein a bipartite graph partitioning and super pixels are collected during segmentation to calculate number of segments using T-cut technique; and a classification module (108) for classifying the plurality of features using the honey badger optimized CNN for classifying the plurality of features to detect retinopathy.

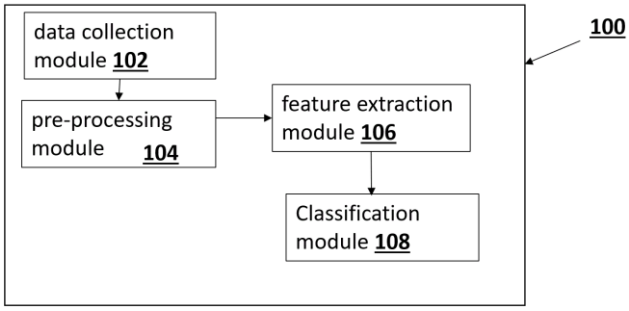

21: 2023/02822. 22: 2023/02/27. 43: 2023/05/17
51: A61K
71: MD SAQUIB HASNAIN, AMIT KUMAR NAYAK, SAAD ALKAHTANI, SAUD ALARIFI
72: MD SAQUIB HASNAIN, AMIT KUMAR NAYAK, SAAD ALKAHTANI, SAUD ALARIFI

54: A PROCESS FOR PREPARATION OF SUSTAINED-DRUG RELEASE BEADS BY IONOTROPIC GELATION AND ITS COMPOSITION THEREOF

00: -

The process comprises extracting Pectin from low quality apples (Malus domestica Borkh); subjecting extracted pectin to some tests for phytochemical identification; dissolving 25-50 wt% of apple pectin and 25-100 wt% of sodium alginate in 100 ml deionized water using a magnetic stirring of 300 rpm for 30 min, separately; mixing both the polymer solutions with continuous magnetic stirring of 300 rpm for 30 min again; adding 1-6 wt% of Metformin HCl to the mixture gels of apple pectin-alginate; extruding the prepared homogeneous bubble-free drug-polymeric solutions separately drop-wise into different counter-ion solutions containing calcium chloride using a hypodermic syringe (21 G); retaining the added droplets in the counter-ion solutions to produce rigid beads and collecting the wet beads by decantation; and washing the collected beads two times with distilled water and drying the beads in room temperature for overnight thereby storing the dried beads containing Metformin HCl in a desiccator.

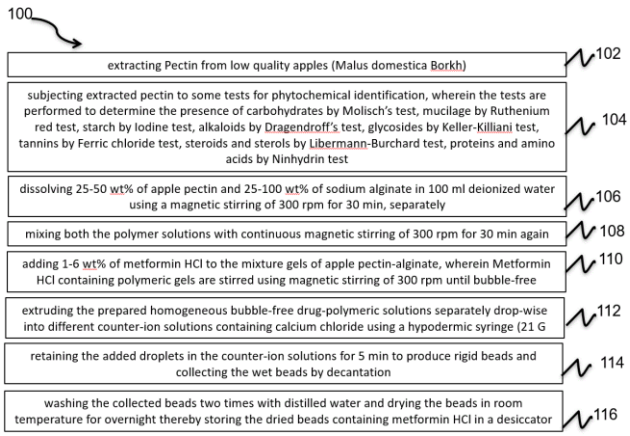

21: 2023/02825. 22: 2023/02/27. 43: 2023/05/17
51: G06T
71: Arun Kumar Sunaniya
72: Arun Kumar Sunaniya

54: A METHOD FOR PERFORMING IMAGE SHARPENING ON THE BASIS OF LOCAL INTENSITY VARIATION

00: -

The present disclosure relates to a method for performing image sharpening on the basis of local intensity variation. In the present disclosure, a sharpening operation will be performed on the necessary regions by the proposed algorithm, decreasing the visual effects of the noise. This is an adaptive unsharp masking scheme that can tolerate the noise content. The proposed approach can be executed in both automatic and manual mode of operation by user. According to experimental findings, the proposed method produces superior visual outcomes to the traditional unsharp masking method in the presence of noise.

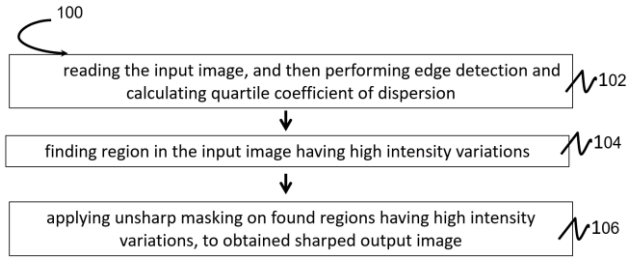

21: 2023/02828. 22: 2023/02/27. 43: 2023/05/17
51: H05K
71: Shaik Kareem Ahmamd, RAMADEVUDU GOKARAKONDA, Shailendra Kumar Singh, Nazima Siddiqui, G. Nataraju, Mohammad Raheem Ahmed, Pallerla Suresh, Mohd Abdul Haleem Rizwan
72: Shaik Kareem Ahmamd, RAMADEVUDU GOKARAKONDA, Shailendra Kumar Singh, Nazima Siddiqui, G. Nataraju, Mohammad Raheem Ahmed, Pallerla Suresh, Mohd Abdul Haleem Rizwan

54: A METHOD FOR PREDICTING THE DENSITY OF OXIDE AND FLUORIDE GLASSES USING ARTIFICIAL INTELLIGENCE TECHNIQUES

00: -

The present disclosure relates to a method for predicting the density of oxide and fluoride glasses by using artificial intelligence techniques. In the present disclosure, the densities of the oxide and oxy-fluoro glasses are predicted on the basis of their chemical composition and ionic radii by using artificial intelligence models such as gradient descent, random forest regression, and artificial neural networks with different activation functions. First the dataset is obtained for both oxide and fluoride glasses, and then these dataset are trained by using the AI models for predicting the densities. The results showed that the proposed technique is effective and efficient is predicting the density of any oxide and fluoride glasses with maximum accuracy for known glass composition.

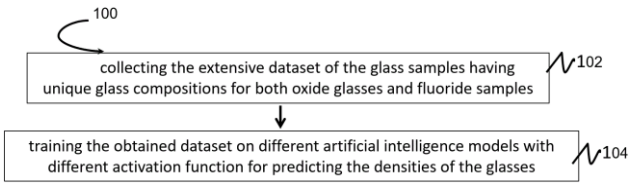

21: 2023/02831. 22: 2023/02/27. 43: 2023/05/17
51: G01N
71: Liaoning Petrochemical University
72: Xie fei, Wang dan, Sun dongxu, Wang guofu, Pan yi, Yang shuangchun, Wang yue
33: CN 31: 202211025214.5 32: 2022-08-25

54: NOVEL ELECTROCHEMICAL TESTING DEVICE UNDER COUPLING EFFECT OF MAGNETIC FIELD AND LOAD

00: -

The invention relates to a novel electrochemical testing device under the coupling effect of magnetic field and load, which comprises a stretching box, an electrochemical corrosion device and a stress corrosion device. A magnet is arranged at the outer side of the stretching box for placing a stress-loaded test specimen; the electrochemical corrosion device is connected with the stretching box and used for performing electrochemical corrosion on the stress-loaded test specimen; the stress corrosion device is connected with the stretching box and used for applying stress corrosion to the stress-loaded test

specimen. According to the invention, the electrochemical corrosion device and the stress corrosion device are arranged on the stretching box, so that the synchronous measurement of stress corrosion and electrochemical corrosion tests of stress-loaded test specimens under different magnetic field strengths is realized, and the test effect is greatly improved.

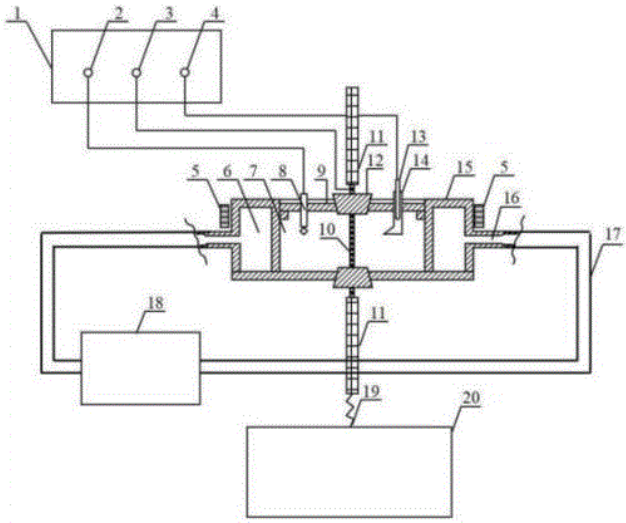

21: 2023/02832. 22: 2023/02/27. 43: 2023/05/17
51: C02F
71: Yancheng Polytechnic College, Yancheng Teachers University
72: Tao Weihua, Tao Ye, Zhao Weiwei
33: CN 31: 202310141872.9 32: 2023-02-21

54: WASTE WATER UTILIZATION DEVICE FOR RESIN ADSORPTION

00: -

The invention discloses a resin adsorption waste water utilization device, which comprises a bottom plate, wherein the central position of the top of a top cover is fixedly connected with a motor, the bottom position of the rear end of a purification box is penetrated through and fixedly connected with a filter box, the front end of the inner wall of the filter box is fixedly connected to a filter screen, and the rear position on the left side of the top of the bottom plate is fixedly connected to a water storage tank. The front end of that wat pump is penetrated and fixedly connecte with a water suction pipe, and the water suction pipe is penetrated and fixedly connecte with the filter box. In that invention, the motor drive the stirring shaft and the stir blades to rotate so as to stir resin, the position of the resin can be changed, uneven adsorption of the resin in the purifying box is prevent, the water pump generates suction force to suck out purified water in the purifying box through the water suction pipe, and when the purified water passes through the filter box, a filter screen in the filter box can filter the resin to prevent the resin from entering the water pump, The water is sucked out by the water pump and enters the water storage tank through the water supply pipe to wait for secondary utilization.

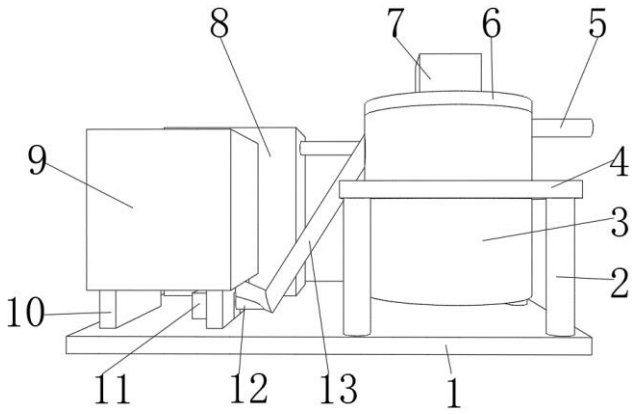

21: 2023/02833. 22: 2023/02/27. 43: 2023/05/17
51: A61B
71: Dr. Prashant Kumar, Mr. Praneet Agarwal, Mr. Shashvat Kumar Gupta, Ms. Tvisha Gupta, Dr. Monika Gupta
72: Dr. Prashant Kumar, Mr. Praneet Agarwal, Mr. Shashvat Kumar Gupta, Ms. Tvisha Gupta, Dr. Monika Gupta

54: A REALTIME LARYNGOSCOPY PRESSURE SENSOR MONITORING DEVICE

00: -

A Realtime Laryngoscopy Pressure Sensor Monitoring Device (100), wherein the device (100) comprises of: a pressure sensor (102) comprises of a plurality of force sensing resistors (102a) placed at a distance to measure pressure at distinct points, wherein the force-sensing resistor (102a) consists of a film of force-sensing polymer (102b) which forms an active area with piezoelectric properties, on top of a conductive film printed on a flexible substrate; a laryngoscope blade (104) connected to a gel strip (106) accommodating the pressure sensor (102); a processing unit (108) for generating a command signal if the measured pressure exceeds beyond a threshold value to avoid harmful stress; and an alarm device (110) for alerting the user upon receiving the command signal when the pressure

sensed by the pressure sensor (102) is increasing to avoid harmful stress.

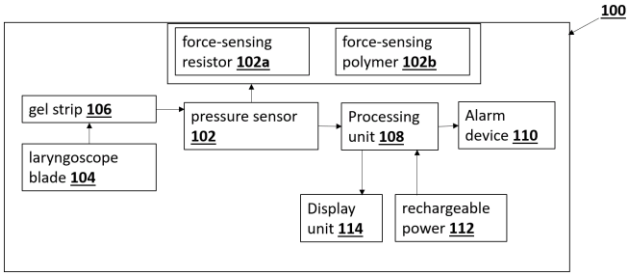

21: 2023/02837. 22: 2023/02/27. 43: 2023/05/17
51: B28B
71: China Railway Third Engineering Group Co., Ltd, China Railway Third Engineering Group Fourth Engineering Co., Ltd
72: Xue yanjie, Zhang chuancheng, Chen jiaxin, Li zhen, Ma shenkang, Li tong, Hao jingfeng
54: INTEGRAL FORMWORK WITHOUT INTERNAL AND EXTERNAL SUPPORTS FOR PREFABRICATED BOX CULVERTS
00: -
Integral formwork without internal and external supports for prefabricated assembly box culverts, comprising an inner formwork member, the inner formwork member comprising a first inner formwork, the upper end of the first inner formwork hinged to the left side of the inner top formwork, the lower end of the first inner formwork hinged to the third inner formwork, the upper end of the second inner formwork hinged to the right side of the inner top formwork, the lower end of the second inner formwork hinged to the upper end of the fourth inner formwork, the upper end of the first support telescopic rod hinged to the left side of the inner top formwork The first support telescopic rod is hinged to the third keel on the left side of the inner formwork, the lower end of the first support telescopic rod is hinged to the second keel on the third inner formwork, the upper end of the second support telescopic rod is hinged to the third keel on the right side of the inner top formwork, the lower end of the second support telescopic rod is hinged to the second keel on the fourth inner formwork; a number of tie screws run through the fifth keel, the outer formwork, the concrete chamber, the inner formwork and the first/second keel, respectively. The outer and inner elements are fastened in place.

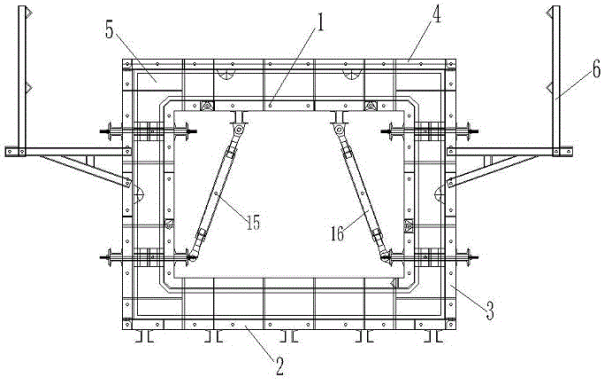

21: 2023/02840. 22: 2023/02/27. 43: 2023/05/17
51: D06P
71: Dr. Amit Kumar Dey, Dr. Abhijit Dey, Zahid Mukhtar, Ayna Zahoor
72: Dr. Amit Kumar Dey, Dr. Abhijit Dey, Zahid Mukhtar, Ayna Zahoor
54: A COMPOSITION AND A METHOD OF PREPARING AN ADSORBENT FOR REMOVING A CATIONIC DYE FROM AN AQUEOUS SOLUTION
00: -
A method of preparing an adsorbent for removing a cationic dye from an aqueous solution, comprises of: preparing (100) activated carbon, carbon comprises of: collecting 364.911 g/mol of a plant material MG, cutting the dried plant materials for carbonization, chemically activating a carbon made from water hyacinth with a 1:3 NaOH in an activator; stirring by a magnetic stirrer hot plate at a second defined temperature and 200-400 rpm, the WH-C is heated and swirled for a second defined interval; wherein the WH-C is dried until the mass is consistent in a 90-110°C oven to form WH-AC; and synthesizing (200) comprises of: grinding 4-6 g of WH-AC in a grinding jar along with 45-55 ml of distilled water with 0.5-1.5 mg/ml of the NaOH and mixing the mixture of AC and NaOH with 20-30 g of chloroacetic acid for about 5-7 hours to obtain the MCGT-AC.

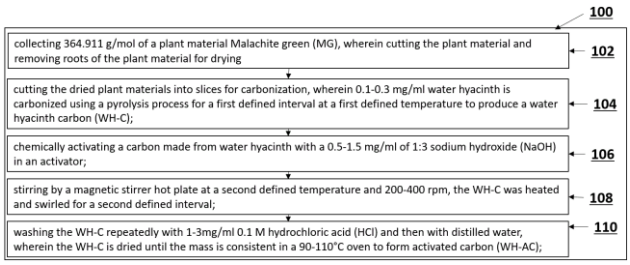

21: 2023/02841. 22: 2023/02/27. 43: 2023/05/17
51: G02F

71: Rudra Sankar Dhar, Potaraju Yugender, Kuleen Kumar, Swagat Nanda, Rasmita Barik
72: Rudra Sankar Dhar, Potaraju Yugender, Kuleen Kumar, Swagat Nanda, Rasmita Barik

54: A NANOSYSTEM-BASED DEVICE USING ULTRA-THIN TRI-LAYERED HOI CHANNEL WITH INCREASED DRIVE CURRENTS IN RECTANGULAR GATE

00: -

The system comprises a tri-layered channel consisting of an s-Si upper layer, a s-SiGe middle layer and an s-Si upper layer induces biaxial strain for carrier confinement at various quantum states; at least four gates fabricated all around the channel for minimizing the short channel effects in 22 nm technology, which increase the mobility due to quantum tunneling phenomenon and the ballistic behavior in the tri-layered strained channel which increases the drive current for Gate All around FET in 22 nm and 10 nm channel length; and at least four oxides of a dielectric material coupled to the at least four gates respectively, wherein the at least four oxides comprises a front oxide, a back oxide, an upper oxide and a bottom oxide of dielectric material designed with silicon dioxide.

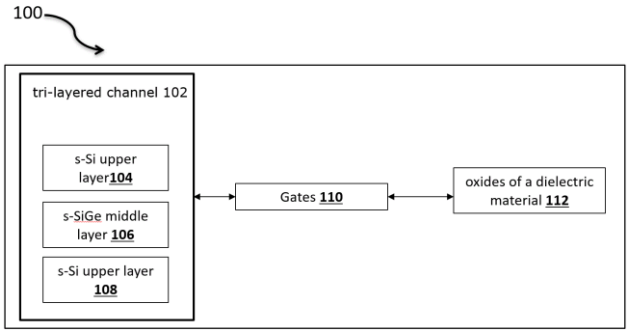

21: 2023/02842. 22: 2023/02/27. 43: 2023/05/17
51: C07K
71: Prof. Raju Nivarti Gacche, Dr. Rafik Usman Shaikh, Dr. Kalim Mansursab Shaikh, Dr. Prakash Pralhad Sarwade
72: Prof. Raju Nivarti Gacche, Dr. Rafik Usman Shaikh, Dr. Kalim Mansursab Shaikh, Dr. Prakash Pralhad Sarwade

54: A METHOD FOR ASSESSING THE ANTI-CANCER EFFECTS OF A METHANOLIC EXTRACT OF CHLOROXYLON SWIETENIA AGAINST HUMAN GLIOBLASTOMA MULTIFORME CELLS

00: -

The present disclosure relates to a method for assessing the anti-cancer effects of a methanolic extract of Chloroxylon swietenia against human glioblastoma multiforme (GBM) cells. In the present disclosure various studies are carried out for evaluating the anti-cancer potential of a methanolic extract of Chloroxylon swietenia, against the human Glioblastoma multiforme (GBM) cells. Various studies are carried out in the present disclosure to confirm methanolic extract of Chloroxylon swietenia as a potential treatment for cancer, wherein results showed that this substance can be used as a potential therapeutic treatment for cancer.

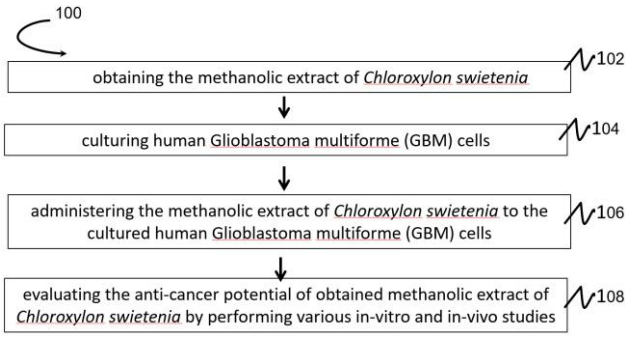

21: 2023/02843. 22: 2023/02/27. 43: 2023/05/17
51: A01N
71: Centurion University of Technology and Management, Annapurna Sahoo, Gagan Kumar Panigrahi, Kunja Bihari Satapathy
72: Annapurna Sahoo, Gagan Kumar Panigrahi, Kunja Bihari Satapathy

54: A COMPOSITION AND METHOD FOR PROVIDING RESISTANCE AGAINST PATHOGEN INFECTION AND DROUGHT STRESS IN ARABIDOPSIS

00: -

A composition and method (100) for providing resistance against pathogen infection and drought stress in Arabidopsis, comprises of: sowing a plurality of seeds of wild-type Arabidopsis thaliana ecotype Columbia-0 in soil to grow plants in automated growth chambers at specific temperature condition and humidity; growing Nicotiana Benthamian plants in soil, essentially for transient expression of proteins; performing needleless syringe infiltration with a prepared bacterial culture using 3-5-week-old leaves of the Arabidopsis thaliana plants; collecting a plurality of leaf disks per biological replicate; isolating RNA from fully grown rosettes of three-week-old Arabidopsis plants; obtaining a full-length cDNA of a DRP by a RT-PCR using Col-0 RNA and cloned into plant

transformation expression vectors such as HA and Green fluorescence protein (GFP); transforming a binary clone into Agrobacterium tumefaciens strain; and extracting proteins from 0.5 g infected and uninfected leaves using an extraction buffer.

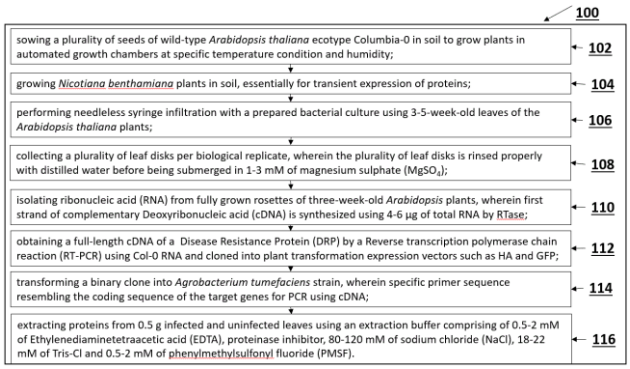

21: 2023/02844. 22: 2023/02/27. 43: 2023/05/17
51: G06N
71: Mr. Ashar Siddiqui, Prof Masood H. Siddiqui, Dr. Sasmita Padhy, Dr. Preetam Suman, Dr. Rajit Nair, Mrs. Rashmi Dharwadkar
72: Mr. Ashar Siddiqui, Prof Masood H. Siddiqui, Dr. Sasmita Padhy, Dr. Preetam Suman, Dr. Rajit Nair, Mrs. Rashmi Dharwadkar

54: AN ARTIFICIAL INTELLIGENCE SYSTEM AND METHOD TO PREDICT COVID-19 THROUGH IMAGES

00: -

The present invention generally relates to a system for predicting COVID-19 using medical images comprises a pre-processing module configured to preprocess medical images by performing image denoising to remove noise and artifacts from the medical images; a feature extraction module configured to extract features from the preprocessed medical images using a pre-trained convolutional neural network (CNN); a classification module configured to predict the probability of COVID-19 using a support vector machine (SVM) as the classification technique, based on the extracted features; a threshold determination module configured to determine a threshold for COVID-19 diagnosis based on receiver operating characteristic (ROC) curve analysis of the classification technique; a storage module configured to store the pre-trained CNN and SVM model; and a computing device configured to implement the pre-processing module, feature extraction module, classification module, threshold determination module, and storage module, and to provide an output indicating the predicted probability of COVID-19 diagnosis.

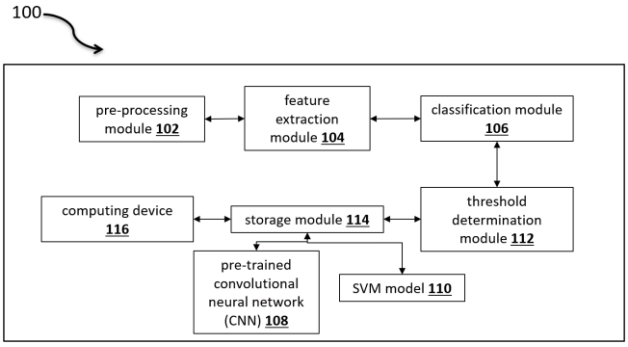

21: 2023/02847. 22: 2023/02/27. 43: 2023/05/17
51: H05K
71: Rudra Sankar Dhar, Rasmita Barik, Swagat Nanda, Kuleen Kumar, Potaraju Yugender
72: Rudra Sankar Dhar, Rasmita Barik, Swagat Nanda, Kuleen Kumar, Potaraju Yugender

54: A NANOWIRE SYSTEM FOR FASTER SWITCHING WITH ENHANCED ON-CURRENT AND ITS PREPARING PROCESS THEREOF

00: -

The system comprises an ultra-thin tri-layer strained channel having an s-Si outer layer and an s-Si inner layer of strained silicon and a s-SiGe middle layer of the strained SiGe disposed in between the outer layer and the inner layer; a gate oxide of dielectric material with silicon dioxide surrounded by a cylindrical gate of metal material with specific polysilicon, wherein the gate has a source and drain region with silicon material; and at least two quantum well-barrier structures with Type-II band for carrier confinement throughout the cylindrical system, one as the outer thin-layer, another as the inner thin-layer, both of which are tensile strained due to the influx of compressed strained SiGe barrier-layer, wherein the quantum-well formed by congealing the channel with the strained layers in the quantum nano-wire system enabling carrier confinement and quasi-ballistic transport improves carrier mobility and counter threshold voltage roll-off.

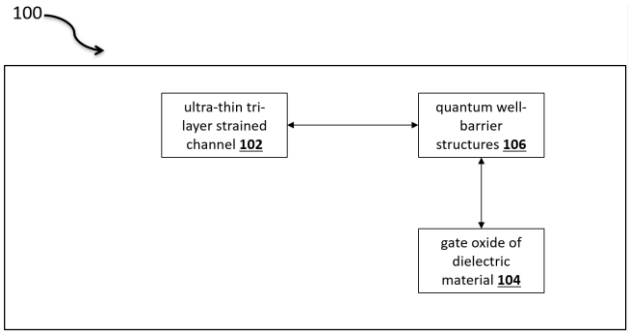

21: 2023/02848. 22: 2023/02/27. 43: 2023/05/17
51: G02B
71: Faisal Ahmad, Mujib Ahmad Ansari, Ajmal Hussain
72: Faisal Ahmad, Mujib Ahmad Ansari, Ajmal Hussain
54: AN ANN SYSTEM FOR THE PREDICTION OF DISCHARGE COEFFICIENT OF AN ARCED LABYRINTH SIDE WEIR
00: -
The present invention generally relates to an artificial neural network (ANN) system for the prediction of discharge coefficient of an arced labyrinth side weir comprises an arced labyrinth side weir with two triangular keys with an angle of 60 degrees, wherein flow over the arced labyrinth side weir entered a deviation channel with dimensions of 4.20 meters in length, 0.2 meters in width, 0.35 meters in height, and finally to a return channel; a diverted channel; and a rectangular main channel, wherein the main channel is 12.8 meters long, 0.50 meters wide, and 0.40 meters high, wherein a rectangular sharp crested weir is provided at the end of the channel to measure the discharge flowing through the arced labyrinth side weir.

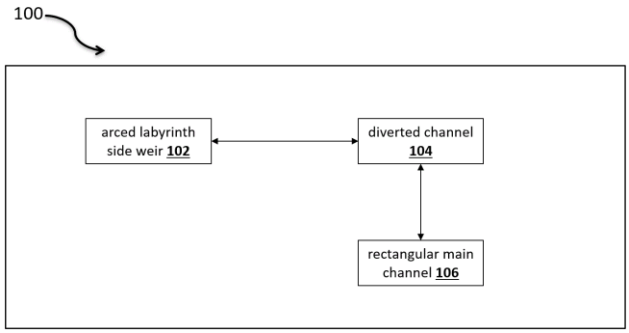

21: 2023/02851. 22: 2023/02/27. 43: 2023/05/03
51: C12N
71: XIAMEN R&B BAICHENG CONSTRUCTION AND INVESTMENT CO., LTD., FUJIAN YIJING ECOLOGICAL CONSTRUCTION GROUP CO., LTD., FUJIAN AGRICULTURE AND FORESTRY UNIVERSITY
72: Yumei WU, Wei LIN, Daicheng YE, Jianfeng CHEN, Lijin GUO, Siren LAN, Bizhu HE, Jing LUO, Jinghui YU, Yin LU, Yifei JIAN, Huaxing HUANG, Jincheng LIANG, Yu LI, Yunxin GUO
54: METHOD FOR SCREENING AND MAPPING ANALYSIS OF TRANSCRIPTOME-REGULATED GENES ASSOCIATED WITH PHENOTYPE FLOWER COLOR OF BOUGAINVILLEA
00: -
Disclosed is a method for screening and mapping transcriptional regulatory genes associated with the phenotype of bougainvillea flower color. The steps comprise: (1) obtaining continuous data of the flower color phenotype of bougainvillea petals with significant color differences and performing data cleaning; (2) conducting high-throughput transcriptome sequencing of different genes using second-generation Illumina technology to obtain differential gene expression levels; (3) performing WGCNA analysis to screen for gene sets/modules associated with color changes; (4) annotating the function of the modules with significant correlation and mapping key regulatory genes involved in the synthesis pathway of color pigments; (5) verifying the key genes through qPCR and subsequent functional validation to identify their key functions. This method can be effectively applied in the hybridization, breeding, and color regulation of bougainvillea, establishing a gene library based on bougainvillea's transcriptional regulatory genes associated with flower color.

21: 2023/02852. 22: 2023/02/27. 43: 2023/05/03
51: C12N
71: XIAMEN R&B BAICHENG CONSTRUCTION AND INVESTMENT CO., LTD., FUJIAN YIJING ECOLOGICAL CONSTRUCTION GROUP CO., LTD., FUJIAN AGRICULTURE AND FORESTRY UNIVERSITY
72: Gantai WANG, Lijin GUO, Mingshun LIAO, Bizhu HE, Xianglian LIAN, Wei LIN, Siren LAN, Jincheng LIANG, Yu LI, Qi YE, Jiehui HUANG, Fanchen ZHENG, Jiaxin SUN
54: METHOD FOR ESTABLISHING REGENERATION SYSTEM OF BOUGAINVILLEA STEM SEGMENTS
00: -
Disclosed is a method for establishing a tissue culture and regeneration system of stem segments

of bougainvillea, as well as a tissue culture medium for bougainvillea and its application. Stem segments of Bougainvillea are used as explants and are sterilized before being inoculated into induction culture medium for 15-20 days to induce axillary buds. The buds are then transferred to proliferation culture medium and cultured for 20-25 days. Next, the 1-3cm tall shoots are transferred to rooting culture medium and grown for 15-20 days to induce root formation and the development of complete plants. Finally, the plants are transplanted. The bougainvillea stem segment tissue culture and regeneration system established by the above method can efficiently obtain regenerated seedlings, laying a foundation for constructing an efficient genetic transformation system of bougainvillea and providing technical references for large-scale reproduction of superior bougainvillea varieties.

21: 2023/02853. 22: 2023/02/27. 43: 2023/05/03
51: A01G; C12N
71: FUJIAN AGRICULTURE AND FORESTRY UNIVERSITY
72: Wei LIN, Lijin GUO, Bizhu HE
54: METHOD FOR INTELLIGENT INDOOR THREE-DIMENSIONAL AND EFFICIENT ORGANIC BAG PROPAGATION OF ANOECTOCHILUS ROXBURGHII (WALL.) LINDL. WITH DISPOSABLE SEEDLINGS TO PRODUCE ROBUST SEEDLINGS
00: -
Disclosed is a method for intelligent indoor three-dimensional efficient organic bag propagation of one-time strong seedlings and seedlings of Cistanche deserticola, which relates to the field of plant tissue culture. By replacing the culture bottles with organic culture bags and inventing an intelligent indoor three-dimensional cultivation rack, this invention aims to reduce labor costs, save production space and energy consumption, improve the quality and survival rate of Cistanche deserticola products, and promote efficient and high-quality production. The method involves selecting and processing the correct external tissues of Cistanche deserticola, preparing and developing organic culture medium, and propagating and cultivating in the organic culture bags with sealed openings for 125 days. The seedling growth, rooting and strong seedling stages are completed in one go, and the seedlings can be directly transplanted after 10-15 days of hardening under natural environment.

21: 2023/02854. 22: 2023/02/27. 43: 2023/05/03
51: A01G
71: FUJIAN AGRICULTURE AND FORESTRY UNIVERSITY
72: Lijin GUO, Wei LIN, Bizhu HE
54: LOW-CARBON AND HIGH-EFFICIENCY ORGANIC BAG PLANTING METHOD FOR ANOECTOCHILUS ROXBURGHII HAYATA SEEDLINGS
00: -
Disclosed is a low-carbon, efficient and organic bag planting method for cultivating seedlings of the goldthread plant. It pertains to the fields of plant tissue culture and cultivation applications, especially focusing on a technology for nurturing and cultivating plants in a simulated natural environment on flat land under forest cover. The aim of this invention is to achieve low-carbon reproduction and high-quality, efficient production of the goldthread plant. The method for achieving this includes: S1, selecting the source and employing organic reproduction technology for the goldthread plant seedlings; S2, selecting and treating the planting site environment; S3, transplanting the goldthread plant into imported peat soil and inoculant as the cultivation substrate; and S4, nurturing and managing the bagged seedlings after planting. The use of bag planting technology with one-time, robust seedlings grown from organic propagation of goldthread plant seedlings significantly reduces the production process and cost of seedlings.

21: 2023/02869. 22: 2023/02/27. 43: 2023/05/10
51: E02B
71: CCCC FIRST HARBOR CONSULTANTS CO., LTD
72: JI, Zezhou, WANG, Yuhong, WU, Bo, LI, Jiaojiao, MA, Rui, WANG, Huai, FENG, Lu, HOU, Wei, YUAN, Lisha, LI, Chao
33: CN 31: 202110884632.9 32: 2021-08-03
54: ECOLOGICAL WAVE DISSIPATION BLOCK
00: -
Disclosed in the present invention is an ecological wave dissipation block structure, which is a concrete artificial block structure. A block main body is a rectangular block with inwardly recessed sides, a vertical through hole is provided in a central

portion of the block main body, each of the four corners of the bottom of the block main body is provided with an outwardly protruding foot which is in the shape of a truncated pyramid, ends of the outwards protruding feet are retracted inwards, four pits are provided at the positions of the top of the block main body corresponding to the four feet, and strip-shaped grooves, strip-shaped protrusions, or point-shaped recesses or point-shaped protrusions are arranged at non-pit positions of a top surface of the main body and non-foot positions of side surfaces of the main body, thereby increasing the roughness of the main body.

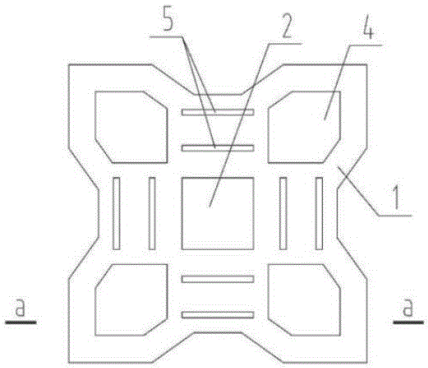

FIG. 1

21: 2023/02875. 22: 2023/02/27. 43: 2023/05/10
51: B60Q; B60R; G01R
71: REVIVERMX, INC.
72: PRONINA, Olga, MASON, Todd, Christopher, SHIGAPOV, Andrey
33: US 31: 16/943,974 32: 2020-07-30
54: POWER AND BATTERY SYSTEMS FOR A DIGITAL LICENSE PLATE
00: -
A power system for a digital license plate includes a sensor, storage memory, and a battery status monitor operable only during operation of the digital license plate. The battery status monitor includes an analog to digital converter (ADC) connected to a battery to provide status data to a processor in the digital license plate, with status data being stored in the storage memory. A determination of battery lifetime being made at least in part using the status data and input from the sensor. In one embodiment status data can include external temperature.

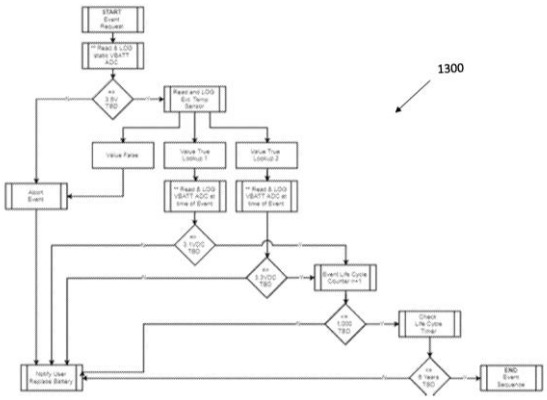

21: 2023/02876. 22: 2023/02/27. 43: 2023/05/10
51: B60R
71: REVIVERMX, INC.
72: MASON, Todd, Christopher
33: US 31: 16/943,891 32: 2020-07-30
54: DISPLAY HEALTH CHECK SYSTEM FOR A DIGITAL LICENSE PLATE
00: -
A digital license plate comprising includes a display system capable of showing a first image and a power supply rail connected to the display system. A display controller is provided with a data connection to the display system and arranged to measure at least one of power consumption and impedance of the power supply rail. The display controller is further configured to prevent sending a second image to the display system if display failure is indicated by measured power consumption or impedance as being below a defined threshold.

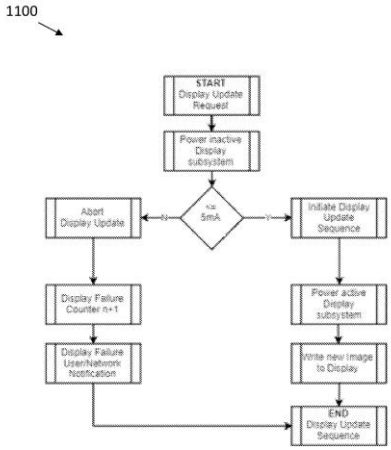

21: 2023/02888. 22: 2023/02/27. 43: 2023/04/20
51: E02D; E02B

71: CHINA HARBOUR ENGINEERING COMPANY LTD.
72: YANG, JIAYAN
33: CN 31: 2022110684219 32: 2022-09-02
54: PILE-SUPPORTED WHARF STRUCTURE
00: -
The present invention discloses a pile-supported wharf structure, comprising: a pillar disposed vertically; a connecting cylinder sleeved on an upper end of the pillar; wherein a first arc-shaped connecting plate is connected with a side wall of the connecting cylinder, a second arc-shaped connecting plate is arranged at first arc-shaped connecting plate, first and second arc-shaped connecting plate are relatively arranged in a concave face, edges on both sides of first and second arc-shaped connecting plate extend outward to form extending parts, and extending parts of first and second arc-shaped connecting plate extend are provided with fixing holes; a prefabricated beam, whose shape near both ends is adapted to a shape surrounded by the first and second arc-shaped connecting plate, and is clamped by the first and second arc-shaped connecting plate. The present invention has convenient assembly operation, high efficiency, less labor and time, and less pollution to environment.

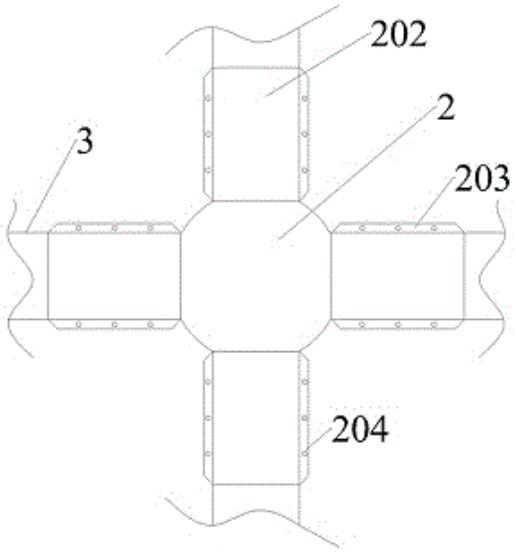

21: 2023/02917. 22: 2023/02/28. 43: 2023/05/11
51: A61G
71: DR.VISHWANATH KARAD MIT WORLD PEACE UNIVERSITY, KAMALIYA, Parth Manubhai, PAWAR, Ashish Haribhau, PACHPORE, Swanand Sudhir
72: KAMALIYA, Parth Manubhai, PAWAR, Ashish Haribhau, PACHPORE, Swanand Sudhir
54: A SMART CAP FOR BLIND PERSON
00: -
The present invention relates to a smart cap for blind persondesign. Design and development of the prototype of the Smart cap for Blind People with the help of Arduino UNO, HC-SR04 Ultrasonic Sensor, and other Components. This cap will assist the blind person during the walk-in room or garden and provide an alarm if any hurdle is detected within the set range. This invention is described in detail with the help of Figure 1 illustrates the Schematic Diagram of invention.

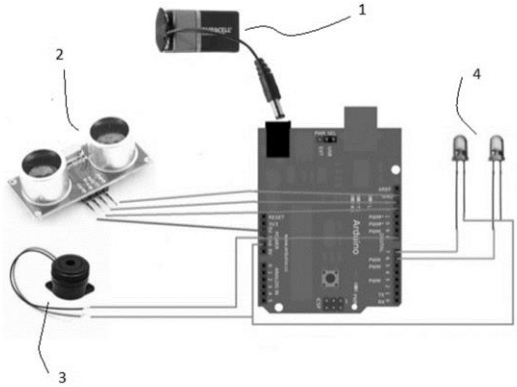

21: 2023/02918. 22: 2023/02/28. 43: 2023/05/11
51: F26B
71: DR.VISHWANATH KARAD MIT WORLD PEACE UNIVERSITY, HAVALDAR, Sanjay Narayan, KULKARNI, Kaustubh Ganesh, MALAPUR, Harsh Vishwanath
72: HAVALDAR, Sanjay Narayan, KULKARNI, Kaustubh Ganesh, MALAPUR, Harsh Vishwanath
54: A VERTICAL DRAFT SOLAR DRYER
00: -
A solar dryer is a sustainable approach for drying purposes since we are using renewable energy to provide the heating required. The design is a single apparatus where there are no different moving parts. The apparatus heats the air by a significant amount which could be utilized to dry the fruits or leaves. The flow rate also plays a crucial role as the temperature gain is inversely proportional to the mass flow rate. It is also observed that as the flow rate increases, thermal efficiency also increases for

this apparatus as the heat gained by the fluid is becomes better. The experiments also included the use of multiple passes in a closed-loop cycle. Doing this increases the working temperature of the apparatus, which in turn increases the thermal efficiency and improves the system as work input is reduced. The temperature gained is constant in every pass, but the temperature lost increases per pass, reaching thermal equilibrium after ten passes. This is the point after which the working temperature starts decreasing. This also means that the curve becomes sinusoidal after every ten passes, where the temperature drops to the temperature of the first pass and then starts increasing again.

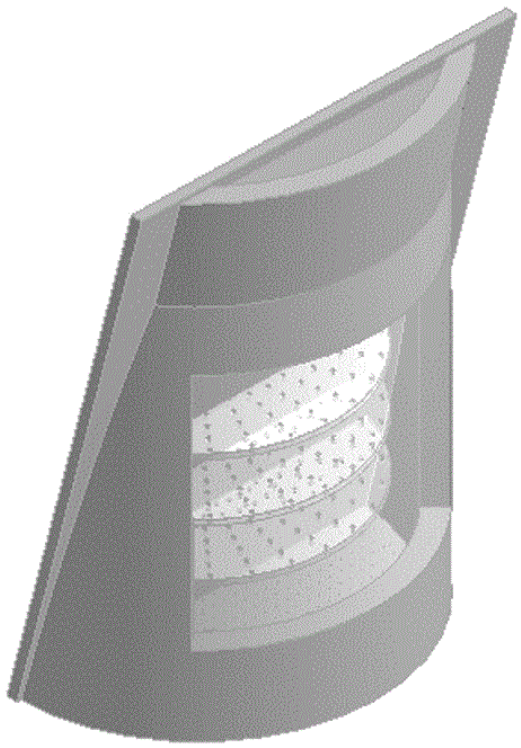

21: 2023/02919. 22: 2023/02/28. 43: 2023/05/11
51: H02B
71: Jiangsu College Of Safety Technology
72: Duan Kun, Zhu Shuaishuai
54: LECTRIC AUTOMATIC POW DISTRIBUTION CABINET FOR ELECTRONIC INFORMATION PUMP STATION
00: -
The invention discloses an electrical automation power distribution cabinet for an electronic information pump station, which comprises a cabinet body, wherein a rotating shaft and a reciprocating screw rod which are transversely arranged are rotatably mounted in the cabinet body; a rectangular block is connected to the reciprocating screw rod in a threaded manner; a sliding block is mounted on the rectangular block in a sliding manner; a mounting plate is fixedly connected to the sliding block; and the mounting plate is connected with a fan through a driving block; Which comprises a cabinet body, wherein the cabinet body is fixedly connected with a fixed sleeve; the fixed sleeve is connected with a sliding rod in a sliding manner; the sliding rod is fixedly connected with a first spring. In that horizontal move process, the fan can also move back and forth in the cabinet body, so that the heat dissipation effect on most position in the cabinet body is better, and the cabinet body is not easy to damage due to high temperature after being use for a long time, thereby being more beneficial to the normal use of the power distribution cabinet.

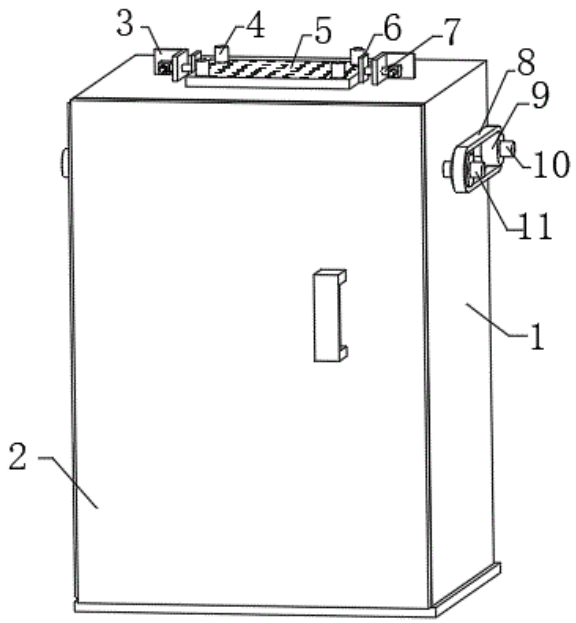

21: 2023/02920. 22: 2023/02/28. 43: 2023/05/11
51: A61G
71: Zhang Jinglan
72: Zhang Jinglan
54: REMOTE NURSING DEVICE FOR HYPERTENSION AGED PEOPLES
00: -
The invention discloses a remote nursing device for the elderly with hypertension, which comprises a folding telescopic frame, wherein the top of the

folding telescopic frame penetrates through and is provided with an upper frame; the top of the upper frame is fixedly connected with an electric slide rail; the top of a sliding block part of the electric slide rail is fixedly connected with a handrail plate; and the rear side of the top part of the handrail plate penetrates through and is rotatably connected with a belt coiling roller. In the invention, the arms are firstly put on the anti-slip claws, then the first electric push rod is started to push the folding telescopic rack at the lower part of the rear side, and then the folding telescopic rack drives the upper frame to rise, so that the elderly can be assisted to stand.

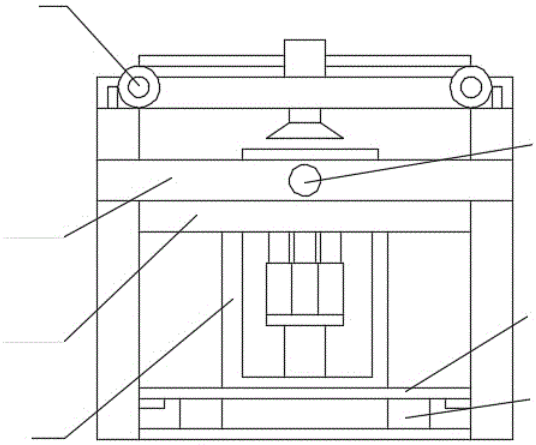

21: 2023/02921. 22: 2023/02/28. 43: 2023/05/11
51: F03G
71: DR. VISHWANATH KARAD MIT- WORLD PEACE UNIVERSITY, RAZDAN, Surbhi, HARSH, K. Shri
72: RAZDAN, Surbhi, HARSH, K. Shri
54: BAMBOO FABRIC REINFORCED AIR-SPRING
00: -
The present invention relates to bamboo fabric reinforced air-spring.The present invention is an idea of making composite material made of natural rubber blend and bamboo fabric which is extracted from raw bamboo and are woven into grid fabric. Till now as nylon and polyester fibers were used for reinforcing the rubber. There was at least one layer of reinforcing fibers used. Orientation of fibers cross linking pattern as shown in Figure. These fibers were specifically placed in two directions to increase the strength of rubber so that it can sustain the sudden impacts on the spring.

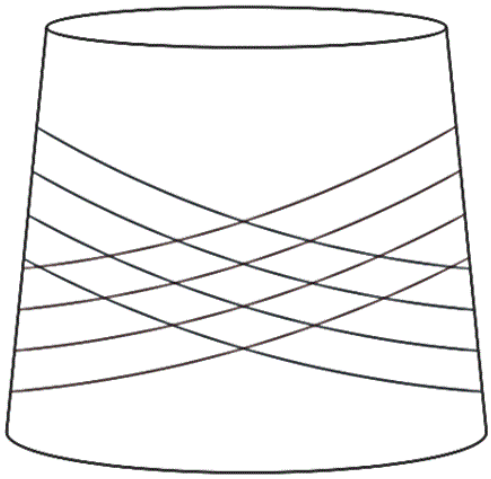

21: 2023/02922. 22: 2023/02/28. 43: 2023/05/11
51: G06F
71: Zhejiang University of science and technology
72: Quan YunHai
54: COMPUTER SECURITY CONTROLLER BASED ON BIG DATA
00: -
The invention provides a computer security controller based on big data, and relates to the field of big data. The computer security controller based on big data comprises a controller, a login detection module, a security detection module, an image acquisition module, big data, a network monitoring module, a login division module and a computer control module. The face of a login person is photographed by an image acquisition unit in an image acquisition module, the photographed image is identified by the big data, the image is stored by an image storage unit, then an alarm is sent to a controller by an alarm unit, and the data is transmitted into the big data by the image acquisition module through the controller.

21: 2023/02923. 22: 2023/02/28. 43: 2023/05/11
51: A62B
71: DR.VISHWANATH KARAD MIT WORLD PEACE UNIVERSITY, ASKHEDKAR, Anjali Rajesh, BARASKAR, Trupti Nitin
72: SINGH, Muskan Santosh, PATADE, Rushikesh Sunil, LENKA, Arpita Manoj, CHELLANI, Jatin Akhilesh, ASKHEDKAR, Anjali Rajesh, BARASKAR, Trupti Nitin
54: INTELLIGENT WEARABLE BAND FOR HEALTH MONITORING AND TRACKING FOR ORGANIZATIONS

00: -
Disclosed is an intelligent health monitoring system having electronic components to measure health parameters like SPO2, temperature & heart rate as well as contact tracing within organizations. This system currently comprises both a hardware and a software component. The hardware portion of this system would contain a wearable wristband developed with basic sensors and connection modules that would record each person's temperature, SPO2, blood pressure, heart rate and contacts throughout the visit. A Bluetooth interfacing module which allows it to update the data directly to the remote database system would establish the connectivity between the hardware and software. The software part would include a mobile application & an accessible admin side dashboard to record the real-time and over-time data, generate alerts and monitor the safety of each group by making use of the extracted files from the actual hardware to generate graphs and alerts. The received data is processed and a health or wellness index for the current set of values is calculated and updated onto the database. A report is created on the basis of the available information and sent to the user.

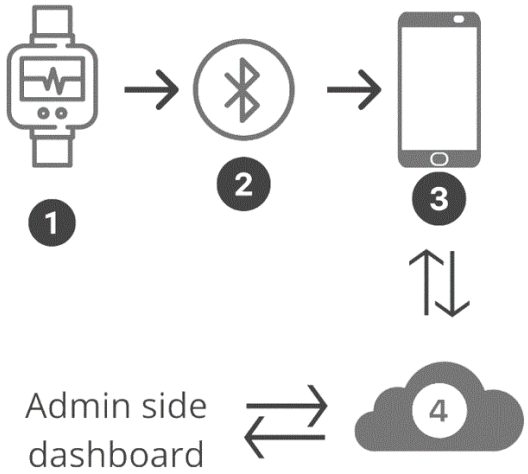

21: 2023/02924. 22: 2023/02/28. 43: 2023/05/11
51: A61M
71: Shanxi Bethune Hospital
72: Hou Shuling, Liu Hu
54: MULTI-CHEMOTHERAPEUTIC DRUG SYNCHRONOUS PERFUSION DEVICE FOR ONCOLOGY DEPARTMENT
00: -

The invention discloses a synchronous perfusion device for multiple chemotherapeutic drugs in oncology department, belonging to the technical field of medical appliances. Which includes a supervisor; The separation membrane group is used for separating the main tube into a plurality of independent infusion channels and comprises a plurality of separation membranes, wherein each separation membrane is made of a soft elastic material, one end of each separation membrane is hermetically fixed on the inner wall of the main tube, the other end of each separation membrane gathers at the central shaft of the main tube, and the separation membranes are positioned at the end parts of the main tubes and are hermetically connected with each other. The synchronous perfusion device for multiple chemotherapeutic drugs in the oncology department of the invention can satisfy the simultaneous delivery of more than two liquid medicines, and each separation membrane of the separation membrane group used for forming a plurality of infusion channels is made of a soft elastic material, Avoid the mutual influence between the liquid medicines. The material is resistant to high temperature, which can ensure high temperature sterilization and meet the needs of human body.

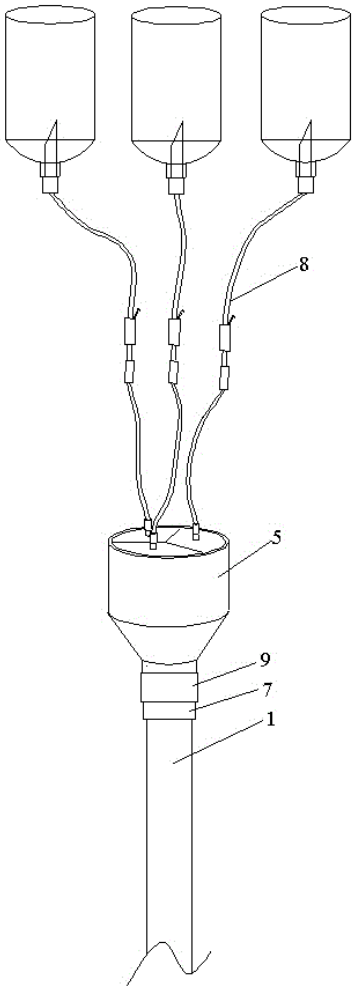

21: 2023/02925. 22: 2023/02/28. 43: 2023/05/11
51: B02B
71: Anhui Science And Technology University, Bengbu Branch of Anhui Communications Industry Service Co., Ltd
72: Pan Dongmei, Wang Feng, Hu Pengli
54: A DEEP PROCESSING METHOD FOR HEALTH FLOUR WITH HIGH-FIBER AND LOW-SUGAR
00: -
The present invention relates to the technical field of flour processing, in particular to a deep processing method for health flour with high-fiber and low-sugar. The deep processing method for health flour with high-fiber and low-sugar comprises the following steps: S1: selecting fine wheat; S2: selecting excellent ingredients; S3: pre-treating the wheat and ingredients; S4: soaking, separating and drying the wheat raw materials; S5: treating nutrients secondly after wheat separation; S6: grinding the nutrients of the wheat; S7: separating and grinding the ingredients; S8: mixing various nutrients and ingredients of the wheat in proportion; S9: sterilizing and canning. Adding certain content of oatmeal, corns, purple potatoes and chickpeas into flour raw materials to enrich the nutrients of flour and improve dietary fiber. The chickpeas are enriched with more unsaturated fatty acids that can promote the body's blood circulation, relax bowel and improve immunity.

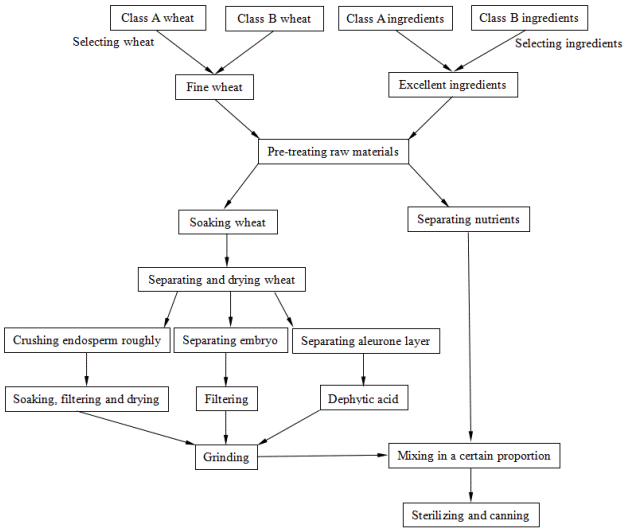

21: 2023/02926. 22: 2023/02/28. 43: 2023/05/11
51: A62B
71: DR.VISHWANATH KARAD MIT WORLD PEACE UNIVERSITY, PHADKE, Anuradha C., LELE, Jyoti A., KALE, Anup, PATIL, Radhesh
72: PHADKE, Anuradha C., LELE, Jyoti A., KALE, Anup, PATIL, Radhesh
54: A FIRST AID VENTILATOR
00: -
The present invention relates to First Aid Ventilator. In pandemic one of the major equipment used to treat COVID-19 is a medical ventilator. The demand for medical ventilators has risen dramatically, pushing manufacturers to increase output by 30–50%. We have proposed a solution to solve this problem of unavailability of ventilator at critical times and that too at low cost which can be used by patient as First aid. Our Arduino based product provides oxygenated air to patient and change the pressure as per need. We have integrated it with oxymeter and pressure sensors. The optimum use of technology to solve the shortage of ventilators can

definitely be used to save lives in pandemic situations. The first-aid, portable, easy to operate and easily scalable ventilators are the need of the hour. Our ventilator will fill this gap.

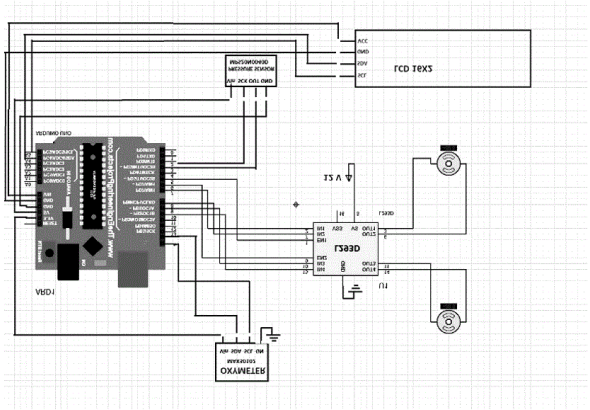

21: 2023/02927. 22: 2023/02/28. 43: 2023/05/11
51: B25B
71: Xuzhou College of Industrial Technology
72: Zhang Yuanyuan
54: A MULTI-FUNCTIONAL CLAMP FOR MECHANICAL MANUFACTURING
00: -
The present invention provides a multi-functional clamp for mechanical manufacturing, comprising a base plate and, an operating table is fixedly connected to the top of the four upright posts; A second fixed plate is fixedly connected to the bottom of the telescopic rod; First fixed plates are fixedly connected to the top of the four connecting blocks; An industrial vacuum cleaner is fixedly connected to the left side of the rear end on top of the base plate; A vacuum pipe penetrates and is fixedly connected with the right top of the industrial vacuum cleaner. In the invention, motor drives bi-directional threaded rod to rotate, and the nut pair in left and right sides in the bi-directional threaded rod is driven to move toward the middle of the operating table, making the first fixed plate clamp the work-piece tightly. Meanwhile, the second fixed plate is moved to the top of the work-piece, and cylinder drives telescopic rod and second fixed plate to move downward to fix the work-piece again; The industrial vacuum cleaner produces suction to suck the scarp into vacuum pipe through vacuum head, and the scrap is sent to industrial vacuum cleaner by the vacuum pipe, whereby the speed of cleaning is greatly improved and the tidy of the operating table is ensured.

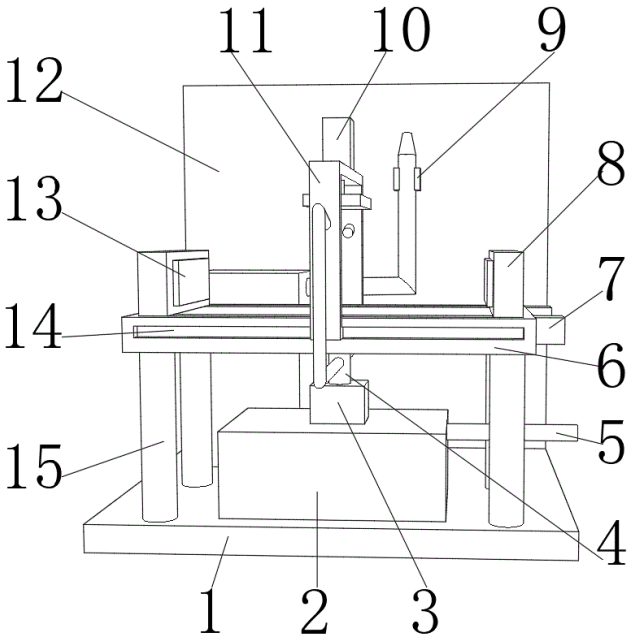

21: 2023/02928. 22: 2023/02/28. 43: 2023/05/11
51: A01C
71: Inner Mongolia Minzu University
72: Zhou wei, Zhou yaxing, Yu zhonghao, Wu guojiang, Li yimeng
54: A PLANTING MACHINE FOR SORGHUM PLANTING
00: -
The patent of the present invention discloses a planting machine for sorghum planting, including a protective cover, the top of the protective cover at the posterior position of the top runs through and is fixedly connected with an evenly distributed seed drop pipe, the bottom of the seed drop pipe are fixedly connected with ditch openers, the top and rear end of the ditch opener are fixedly connected with a seeding protection shell, the central position of the seeding protection shell runs through and is connected with a connecting shaft by rotation, the inner wall of the seeding protection shell are provided with seeding wheels, the left side of the outer diameter of the connecting shaft runs through and is fixedly connected with an eccentric wheel, the right side of the outer diameter of the connecting shaft is fixedly connected to a belt pulley. In the patent of the present invention, when the tractor driving the whole planting structure can achieve seeding and sprinkling work, and can be fast and

slow with the tractor driving to achieve the fast and slow rotation of the seeding wheel, so as to achieve the seeding speed is proportional to the tractor driving speed, which makes the sorghum seeding and planting intervals uniform.

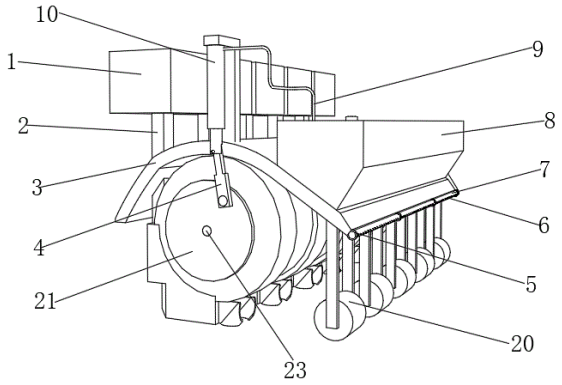

21: 2023/02929. 22: 2023/02/28. 43: 2023/05/11
51: H04W
71: DR.VISHWANATH KARAD MIT WORLD PEACE UNIVERSITY, SALVI, Sanket Sarang
72: SALVI, Sanket Sarang
54: LI-FI BASED SYSTEM FOR SECURED ACCESS AND WIRELESS NETWORK DURING ONLINE EXAMINATION IN CLASSROOMS
00: -
The present invention relates to LI-FI based system for secured access and wireless network during online examination in classrooms.The proposed framework is sub-divided into 4 modules namely as Coordinator node, Li-Fi access point, Wi-Fi access point and mobile phone.The basic functionality of the coordinator node will be to generate passkey and share it with Li-Fi access point as well as Wi-Fi access point.The Li-Fi access point will work as a beacon that transmits a message repeatedly.The Wi-Fi access point will work as a network connection enabling device, which will have a preset SSID and would require a passkey to connect.An app installed on the user mobile will serve as the receiver.

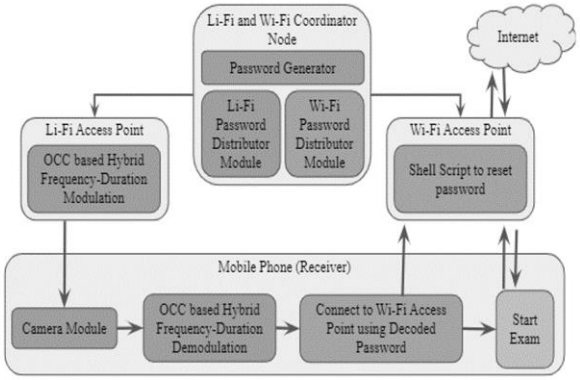

21: 2023/02930. 22: 2023/02/28. 43: 2023/05/11
51: B07B
71: Xuzhou College of Industrial Technology
72: Xiao Xianju, Tang Xuehong, Wu Fapeng, Gao hanbing, Xu Ming, Fu Zongpin, Yang Ce
54: POWDER-SELECTING SCREEN MACHINE FOR FLY ASH
00: -
The invention discloses a powder selecting and screening machine for fly ash, which comprises a bottom plate, wherein a crushing roller penetrates through and is fixedly connected with the middle position of the outer diameter of two rotating shafts, a feeding box penetrates through and is fixedly connected with the bottom of a crushing box, a screening barrel penetrates through the right side of the feeding box and is also fixedly connected with an air heater, The inside of the sieving barrel is penetrated and provided with a screen. In the invention, the second motor drives the rotating shaft and the crushing roller to rotate to crush the agglomerated fly ash, the crushed fly ash enters the feeding box from a blanking hole at the bottom of the crushing box, the first motor drives the feeding rod to rotate in the feeding box, and the fly ash is fed into the screening barrel, so that the screening time of the fly ash can be reduced, and the screening efficiency is greatly improved; and an air heater generates hot air, The fly ash is conveyed into the screening barrel through the air pipe, and the fly ash is heated to dry the fly ash, so that the fly ash can be prevented from adhering to the screen mesh to cause the screen mesh to be blocked.

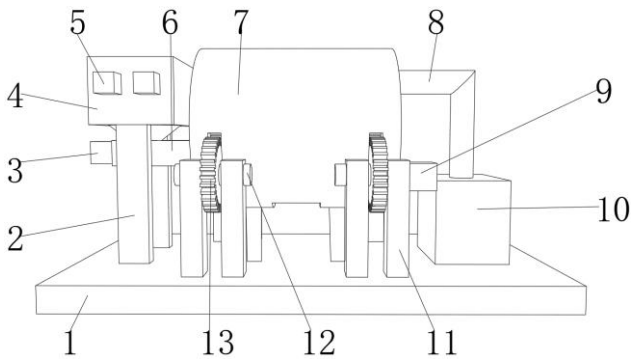

21: 2023/02931. 22: 2023/02/28. 43: 2023/05/11
51: F26B
71: Xuzhou College of Industrial Technology
72: Xiao Xianju, Tang Xuehong, Wu Fapeng, Gao hanbing, Xu Ming, Fu Zongpin, Yang Ce
54: COAL ASH DRY DEVICE
00: -
The invention discloses a fly ash drying device, which comprises a bottom plate, wherein the output ends of two first motors are fixedly connected with a screw rod, the left side and the right side of the outer diameter of the two screw rods penetrate through and are connected with a nut pair by bolts, two conveying rollers are provided with conveying belts, the output end of a third motor is fixedly connected with an agitating shaft, The bottom parts of the left side and the right side of the stirring shaft are fixedly connected with scrapers, and the inner wall of the drying barrel is penetrated and fixedly connected with a heating plate. In that invention, a first motor drive a screw rod to rotate and a nut pair to rotate, the nut pair drives a supporting plate to move rightward to the upper part of a drying barrel, a second motor drive a conveying shaft and a conveying roller to rotate, the conveying roller drives a conveying belt to rotate so as to pour fly ash into the dry barrel, and a third motor drives a stirring shaft, stirring fan blades and a scraping plate to rotate. The stirring fan blades can heat the fly ash in the drying barrel more uniformly, and the scraper can scrape the fly ash on the inner wall and the bottom of the drying barrel.

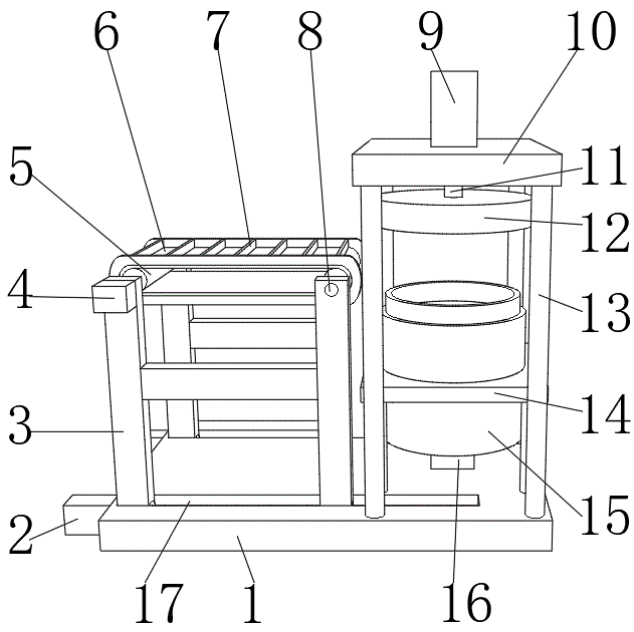

21: 2023/02932. 22: 2023/02/28. 43: 2023/05/11
51: G09B
71: Jiamusi University
72: Sun Yanbin, Li Shengju, Wang Su, Guan Jinqiu, Song Yujun, Ren Guoli, Gu Ye, Wang Xueqiao, Wang Xiankun, Wang Yong, Wang Hanzhong, Han Zaiquan
54: A MATHEMATICS TEACHING MODEL WITH COMPUTER DISPLAY FUNCTION
00: -
The invention relates to the technical field of teaching AIDS, and discloses a mathematics teaching model with a computer display function, which comprises a bottom plate, wherein hydraulic rods are fixedly arranged on both sides of the lower end of the bottom plate, electric telescopic rods are fixedly arranged on both sides of the upper end of the bottom plate, the upper ends of the two electric telescopic rods are fixedly connected with an outer box, and a motor is fixedly arranged in the middle in the outer box. An output end of the motor is fixedly connected with a teaching board, one side inside the teaching board is provided with an accommodating cavity, the upper end and the lower end of the accommodating cavity are both provided with sliding chutes, a computer display screen is slidably arranged inside the accommodating cavity, the upper end and the lower end of the computer display screen are both fixedly provided with sliding blocks, And that rear end surface of the teach board is fixedly arranged as a model board surface. In that

invention, the device simultaneously has the function of writing, compute display and model auxiliary teaching, is convenient to switch, and improves the convenience of teaching.

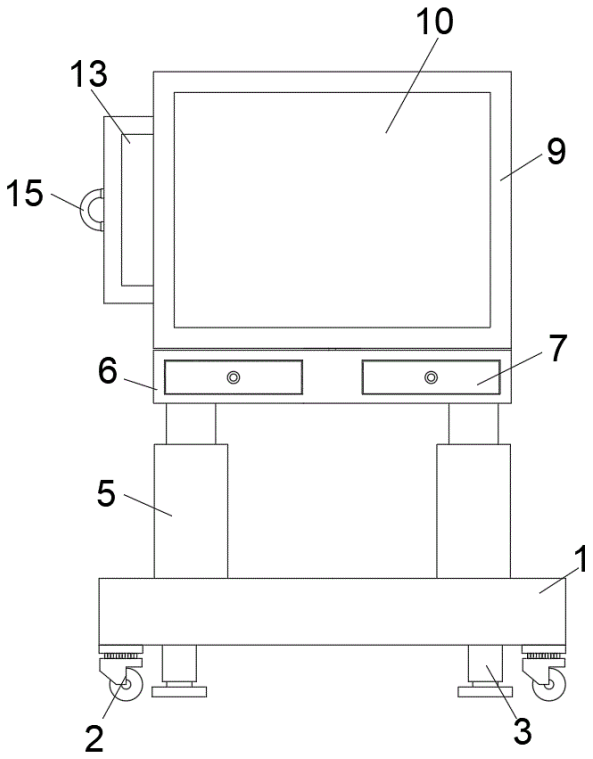

21: 2023/02933. 22: 2023/02/28. 43: 2023/05/11
51: G06T
71: DR.VISHWANATH KARAD MIT WORLD PEACE UNIVERSITY, MOTADE, Sumitra N., KULKARNI, Aniket Dattatraya, DESHPANDE, Anagha, Warhade, Krishna K.
72: MOTADE, Sumitra N., KULKARNI, Aniket Dattatraya, GUNALE, Sanskar Kishanprasad, DESHPANDE, Anagha, Warhade, Krishna K.
54: CONTACTLESS AUDIO-VISUAL INTELLIGENT DOORBELL SECURITY SYSTEM USING HYBRID TECHNOLOGIES FOR DOMESTIC AND COMMERCIAL APPLICATIONS
00: -
Recently doorbells are being modernized from old-generation electric chimes to cloud-connected security systems. Even if the user is at home or outside, the modern Doorbell system plays an important role in identifying visitors at the door. In traditional doorbells and video intercoms, when the bell rings, the user must make physical movements, and leave their ongoing work to open the door to know the visitors at door. The user needs to step out of comfort and physically open the door or move near the intercom to identify the visitor. The proposed intelligent doorbell system will assist users in knowing visitors' identities from any location in the house by announcing the known visitor's name. For an unknown visitor at the door, the system announces it as an unknown person and stores the user's image in the database and gives flexibility to the user to update it by adding unknown visitor information into the database. The contactless feature of the system avoids surface contamination and prevents the spread of diseases like COVID19. When the visitor stands in front of the door, the motion sensor activates and the visitor's image is automatically captured by the camera. The system processes the image and detects the person using the existing cloud database. Novel functionalities in this smart doorbell security system are beneficial for domestic and commercial applications at an affordable cost.

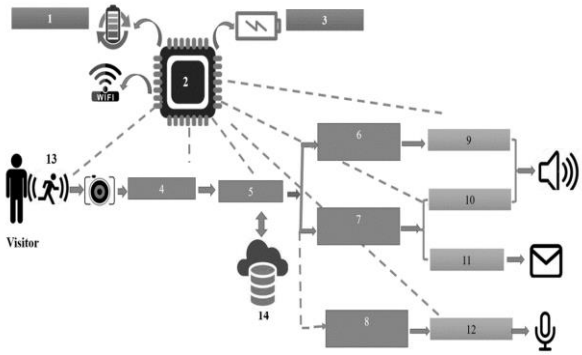

21: 2023/02934. 22: 2023/02/28. 43: 2023/05/11
51: B25J
71: Taizhou University
72: Miao Xinghua, Shen Chunlong, Zhang Miaorong, Chen Xiaokang, Xia Huafeng, Gong Yuling, Yin yue
54: MECHANICAL ARM GRIPPING DEVICE
00: -
The invention discloses a mechanical arm gripping device, which comprises a rotary driving seat, wherein a first motor and a first rotating shaft are fixedly connected to the central position of the inner wall at the bottom of the rotary driving seat; the bottom of the first rotating shaft is fixedly connected with a mechanical arm gripping device; the bottom end of a gripper of the mechanical arm gripper is rotatably connected with a first clamping ring and a second clamping ring respectively; The outer

diameter of the first rotating shaft penetrates through and is fixedly connected with a rotating base, a connecting sleeve and balls are arranged at the top of the rotating base, a second motor and a second rotating shaft are fixedly connected to the inner wall at the right side of the rotating base, the right side of the second rotating shaft is provided with a first rotating drum, a rotating belt and a second rotating drum, and a fixed sleeve and a sliding rod are fixedly connected to the central position at the left side of the second rotating drum. In the invention, the mechanical arm can automatically turn over articles in the process of carrying the articles, and the functional effect of the mechanical arm is effectively improved.

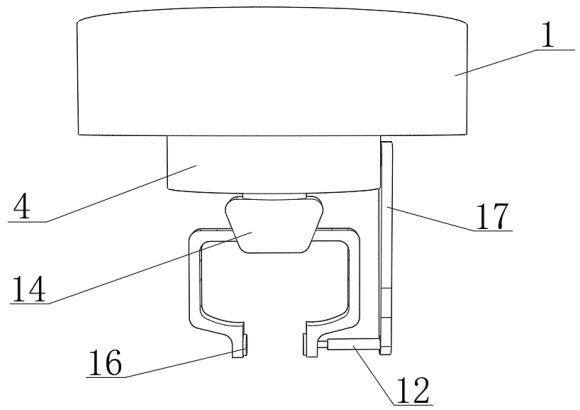

21: 2023/02935. 22: 2023/02/28. 43: 2023/05/11
51: B62M
71: DR.VISHWANATH KARAD MIT WORLD PEACE UNIVERSITY, KULKARNI, Mahesh Vasantrao, MITKARI, Mehul Rakesh, SALKE, Parth Vikrant, SANGRULKAR, Omkar Girish, SURYAWANSHI, Atharva Harish
72: KULKARNI, Mahesh Vasantrao, MITKARI, Mehul Rakesh, SALKE, Parth Vikrant, SANGRULKAR, Omkar Girish, SURYAWANSHI, Atharva Harish
54: ADAPTIVE CONTINUOUS VARIABLE TRANSMISSION COOLING SYSTEM FOR OFF ROAD VEHICLES WITH WIRELESS DATA ACQUISITION SYSTEM
00: -
The present invention relates to an adaptive continuous variable transmission cooling system for off road vechicles with wireless data acquisition system. The proposed invention consisting of, a LM35 Ambient Temperature Sensor within the CVT cover, has a temperature range of -55° C to +150 ° C with an accuracy of ± 1° C, Arduino Nano 33 IOT board as the processing microcontroller and for wireless transmission of fan status and temperature within the CVT cover, a relay module for rapid switching; a 3300mAh lithium-polymer (LiPo) battery to power all of these components; wherein the code is created in the Arduino IDE, uploaded it to the Arduino Cloud, and then used it to build a dashboard to track the IoT project; the code and project data are saved in AES 256-bit encrypted data stores on the cloud, and all linked Arduino boards have built-in crypto chips that make them very safe; Nano 33 IOT board connected to Arduino IoT Cloud via Wi-Fi.

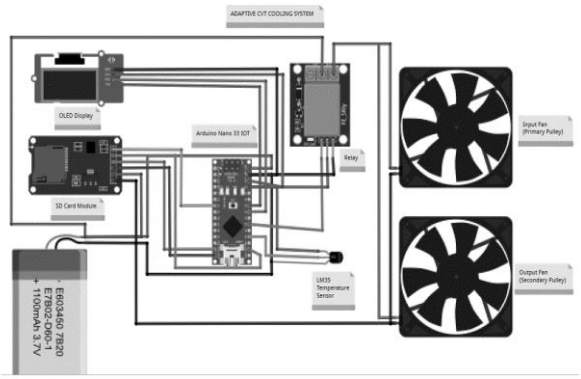

21: 2023/02936. 22: 2023/02/28. 43: 2023/05/11
51: A61K
71: Anhui Science And Technology University
72: Yu Kun, Wu Di, Yu Zehao, Yu Zeyao, Huang Xiaoxiu, He Wei, Ma Xiaoli, Li Peiyan, Chen Chunxu, Du Chuanlai
54: A METHOD FOR IMPROVING THE EXTRACTION RATE OF POLYPHENOLS IN POMEGRANATE PEEL BY STEAM EXPLOSION TREATMENT
00: -
The present invention relates to the field of chemical production preparation technology, specifically a method for improving the extraction rate of polyphenols in pomegranate peel by steam explosion treatment, all the pomegranate peels are soaked in clean water for ten to twelve hours, in the solid-liquid mass ratio is one to six to one to eight; when the soaking time reaches the predetermined time of ten to twelve hours, the pre-soaked clean water is poured off, the pomegranate peels are treated with an intermittent steam explosion device,

and the wet material is put into the reaction kettle of the intermittent steam explosion device, and uses a heater to heat up the jacket, afterwards, water vapor is introduced into the inside of the reaction kettle, so that the pressure reaches one pascal to one and a half pascal, and maintain a time of five to ten minutes, after which the time is up, open the spray valve to make the material spray out. The present invention effectively improves the reuse of pomegranate peel, a by-product of pomegranate processing, through steam explosion treatment such a green and environmentally friendly physical treatment, and significantly improves the extraction rate of polyphenols.

21: 2023/02937. 22: 2023/02/28. 43: 2023/05/11
51: G09B
71: Suzhou University
72: Zhao Ying, Li Qingzhao
54: BRITISH AND AMERICAN LITERATURE APPRECIATION AND ANALYSIS EQUIPMENT
00: -
The invention discloses a British and American literature appreciation and analysis device, which comprises a base, wherein a display screen is fixedly connected to the central position of the right side of the top of the base, an equipment box is fixedly connected to the left side of the display screen, a placing plate is fixedly connected with the left side of the equipment box, a sliding chute penetrates through and is arranged at the upper position of the center of the left sides of the placing plate, two sliding blocks are connected in the sliding chute in a sliding manner, The opposite sides of the left and right adjacent sliding blocks are fixedly connected with bookshelves, and the central positions of the opposite sides of the front ends of the left and right adjacent sliding blocks are fixedly connected with connecting blocks. In the invention, the scanning pen can be directly used for scanning the required part, so that the scanning pen can be directly displayed through the display screen, not only can the English part be displayed, but also the corresponding translated text can be displayed, the comparison and analysis work can be carried out, and the English part can be read aloud through the loudspeaker, thereby not only reducing the workload of teaching staff, But also avoids the problem of traditional curtain shaking.

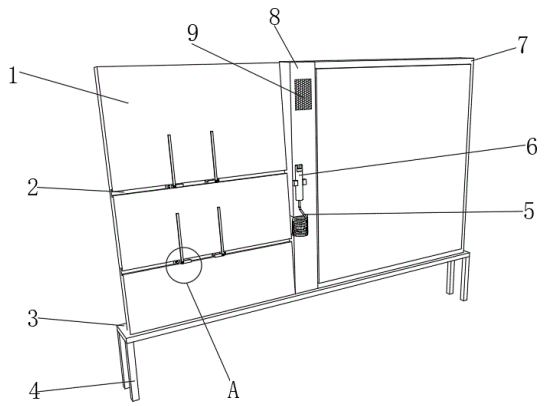

21: 2023/02938. 22: 2023/02/28. 43: 2023/05/11
51: H05K
71: Jiangsu College of Safety Technology
72: Lv Meng
54: MERGENCY COMMUNICATION CABINET FOR INTEGRATE ELECTRONIC COMMUNICATION TRANSMISSION
00: -
The invention relates to the technical field of communication cabinets and discloses an integrated electronic communication transmission emergency communication cabinet which comprises an emergency cabinet body, wherein a mounting mechanism is arranged on the emergency cabinet body and is used for facilitating the rapid mounting of the emergency cabinet body; the mounting mechanism comprises an outer shell body which is arranged on the emergency cabin body; a splicing rod is slidably arranged in the outer shell body; The bottom of the emergency cabinet body is provided with a mounting mechanism in order to enable the emergency cabinet body to be rapidly mounted on the ground to achieve the purpose of emergency use, and the emergency cabinet can be rapidly mounted through the mounting mechanism, Transfer to the emergency cabinet itself to repair or replace the damaged communication cabinet.

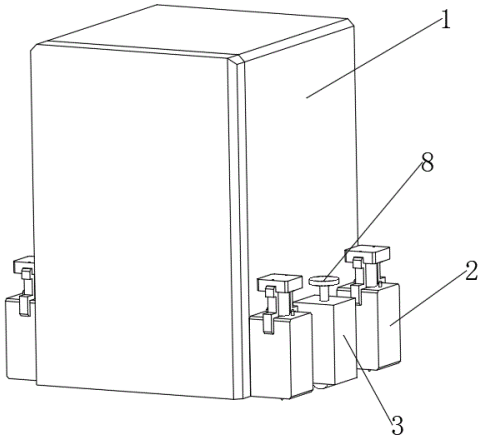

21: 2023/02939. 22: 2023/02/28. 43: 2023/05/11
51: B23K
71: Jiangsu College of Safety Technology
72: Ma Lulu, Zhang Li
54: FIXTURE FOR MANUFACTURING MECHANICAL EQUIPMENT
00: -
The invention discloses a fixing clamp for manufacturing mechanical equipment, which comprises a support frame, wherein a clamping module is arranged at the upper right corner of the support frame, the clamping module comprises a slide block capable of moving up and down, the slide block capable of moving up and down is connected with the support frame in a sliding manner, two first adjusting limiting blocks are arranged at the bottom of the slide block capable ofmoving up and downand are respectively connected with the first adjusting limiting block and the second adjusting limiting block, A second adjusting limiting block is arranged in a gap between the two first adjusting limiting blocks, the bottom of the second adjusting limiting block is fixedly connected with a cross-shaped mounting bracket, and the left end and the right end of the cross-shaped mounting bracket are both fixedly connected with limiting brackets. According to the invention, the adjusting knob is firstly rotated, so that the clamped second adjusting limiting block is loosened and can rotate along the axis of the adjusting knob, and then the inclination angle of the first welding part can be adjusted by rotating the second adjusting limiting block, so that the fixture can adapt to welding parts with different angles, and the applicability of the fixed fixture is improved.

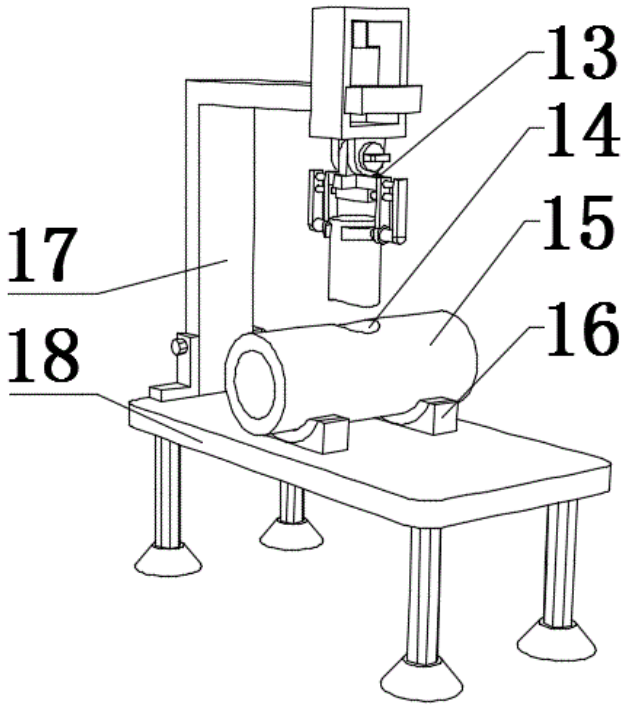

21: 2023/02940. 22: 2023/02/28. 43: 2023/05/09
51: A61K; A61P
71: Chongqing Chemical Industry Vocational College
72: WANG, Yuanzhong, ZHOU, Zaifu
54: BODY FLUID REGENERATING AND SORE THROAT RELIEVING MEDICINAL AND EDIBLE COMPOSITION AND APPLICATION THEREOF
00: -
The present invention provides a body fluid regenerating and sore throat relieving medicinal and edible composition, wherein the medicinal and edible composition includes the following raw materials in parts by weight: 1-8 parts of Moringa oleifera, 1-30 parts of Taraxacum mongolicum, 1-8 parts of Radix glycyrrhizae, 1-8 parts of Semen armeniacae, 1-20 parts of Mentha haplocalyx, 1-15 parts of Siraitiae fructus and 1-20 parts of Flos chrysanthemi indici.The present invention has the beneficial effects that Moringa oleifera and medicinal and edible traditional Chinese medicines are mixed, the compatibility is reasonable, and the entire formula has excellent effects of regenerating body fluid, relieving sore throat, eliminating inflammation and relieving pain, has good curative effects of relieving throat swelling, dry itching and coughing caused by acute and chronic pharyngitis, and has a cure effect on acute pharyngitis.

21: 2023/02941. 22: 2023/02/28. 43: 2023/05/10
51: A01H; A01N; C12N; C12R; A01P
71: Gansu Agricultural University
72: ZHU, Yan, ZHANG, Wei, ZHAO, Yuanshou, ZHANG, Weibing, GONG, Wenjuan, ZHU, Jianning, CHEN, Fu, WANG, Yi, LI, Yongcai, BI, Yang
54: AGROBACTERIUM TUMEFACIENS STRAIN FOR ACCELERATING WOUND HEALING IN POSTHARVEST POTATO TUBERS
00: -
The present disclosure provides an Agrobacterium tumefaciens strain for accelerating wound healing in potato tubers, which is deposited at China General Microbiological Culture Collection Center (CGMCC) under accession number 24362. The A. tumefaciens strain provided by the present disclosure is isolated from a potato tuber wounds, and has the following characteristics: the propagation is fast, the strain is easy to collect, the treatment of postharvest tubers is easy, the formation rate of the wound periderm (namely secondary peridermis, which is mainly composed of cell layers with suberin polyphenolic (SPP), suberin polyaliphatic (SPA), and lignin) on wounded surface of potato tubers is accelerated, so that the weight loss speed of tubers and the expansion of disease spots infected by F. sambucinum are reduced.

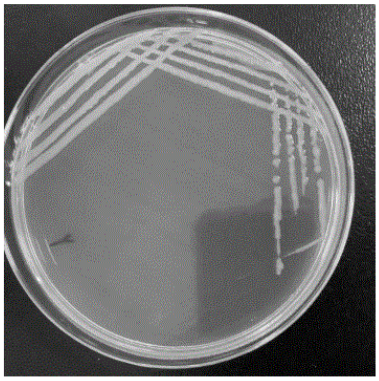

21: 2023/02942. 22: 2023/02/28. 43: 2023/05/03
51: B25J; H02G
71: Hainan University
72: FAN, Junqing, ZHANG, Baozhen, WANG, Wen, WANG, Gaoping, SHEN, Fei
33: CN 31: 2022114099303 32: 2022-11-11
54: AUTOMATIC RUBBER UNLOADING ROBOT FOR NATURAL RUBBER DRYING PRODUCTION LINE
00: -
Disclosed is an automatic rubber unloading robot for a natural rubber drying production line. The automatic rubber unloading robot is provided with a machine frame, the machine frame are provided with rubber block piercing mechanical hands and rubber block piercing mechanical hand lifting and descending mechanisms, guide rails for shuttle cart operating a power rubber conveying trolley and a shuttle cart are arranged below the rubber block piercing mechanical hand. The rubber block piercing mechanical hands are provided with rubber block piercing electric motors, lead screws, mechanical finger fixing rods with mechanical fingers and lifting and descending supporting plates, the machine frame is further provided with lifting and descending vertical guide rails. The rubber block piercing mechanical hand lifting and descending mechanisms are provided with hydraulic cylinders, steel cables and pulleys. The present disclosure has the beneficial effect of automating rubber unloading operation for the natural rubber drying production line.

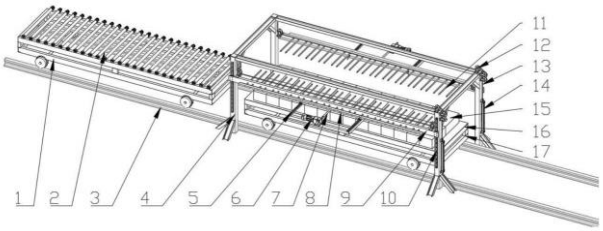

21: 2023/02943. 22: 2023/02/28. 43: 2023/05/03
51: G01N
71: INSTITUTE OF CHINESE MATERIA MEDICA CHINA ACADEMY OF CHINESE MEDICAL SCIENCES
72: LIU, Yan, ZHANG, Jun, GUO, Cong, CHEN, Sha, LIU, An, DI, Jipeng, ZHAO, Anyi
54: METHOD FOR PREPARING SUBSTANCE BENCHMARK OF EPHEDRAE DECOCTION
00: -
The present invention belongs to the field of quality control of Chinese herbal medicines, and particularly relates to a method for preparing a substance benchmark of an ephedrae decoction.

21: 2023/02944. 22: 2023/02/28. 43: 2023/05/03
51: C07D
71: Jilin Medical University
72: XIU, Zhiming, CAI, Jianhui, CAO, Hongmei, LAI, Hongwei, YANG, Weilong, ZHANG, Qing, ZHAO, Shan, LI, Zhuoling, SUN, Meiqi, CAO, Xiaoman
33: CN 31: 2022116983765 32: 2022-12-28

54: CRYSTAL TRANSFORMATION METHOD FOR 3-(N-TOSYL-L-ALANYLOXY)-INDOLE

00: -

Disclosed is a crystal transformation method for 3-(N-tosyl-L-alanyloxy)-indole, which belongs to the field of biomedicine. The crystal transformation method for 3-(N-tosyl-L-alanyloxy)-indole includes the following crystal transformation processes: a preparation method for transforming an amorphous crude product into a crystal form I or a crystal form II; a preparation method for transforming a mixed crystal form of the crystal form I and the crystal form II into the crystal form I or the crystal form II; a preparation method for transforming the crystal form I into the crystal form II; and a preparation method for transforming the crystal form II into the crystal form I. The crystal transformation method can obtain a single and high-purity crystal product, and has the characteristics of a high yield and high purity, and is suitable for industrial production and usage.

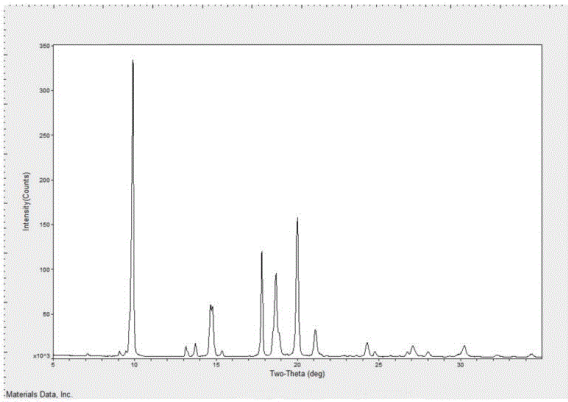

21: 2023/02945. 22: 2023/02/28. 43: 2023/05/03

51: H01M

71: Ningbo Polytechnic, Ningbo MaterChem Technology Co., Ltd.

72: PENG, Zhenbo, YUAN, Zhengyong, WANG, Yiyi, ZHANG, Farao

54: MAGNESIUM SITE-DOPED MAGNESIUM ION BATTERY ANODE MATERIAL AND PREPARATION METHOD THEREFOR

00: -

Disclosed are a magnesium site-doped magnesium ion battery anode material and a preparation method therefor. The preparation method includes: weighing a magnesium source compound, a doped element compound and a nickel source compound, adding appropriate amount of deionized water, performing ball milling and mixing uniformly, taking out powder, then performing drying, and performing firing to obtain solid powder; weighing tetraethyl orthosilicate according to the atomic molar ratio of Ni:Si = 1:1, fully mixing the solid powder, the tetraethyl orthosilicate and appropriate amount of citric acid in anhydrous ethanol solvent, and placing a mixture in a stainless steel tank to obtain a gelatinous substance; and then mixing the gelatinous substance with a carbon source compound for ball milling, and performing sintering for hours in an inert atmosphere to obtain a carbon-coated magnesium ion battery cathode material Mg(1-x)AxNiSiO4.

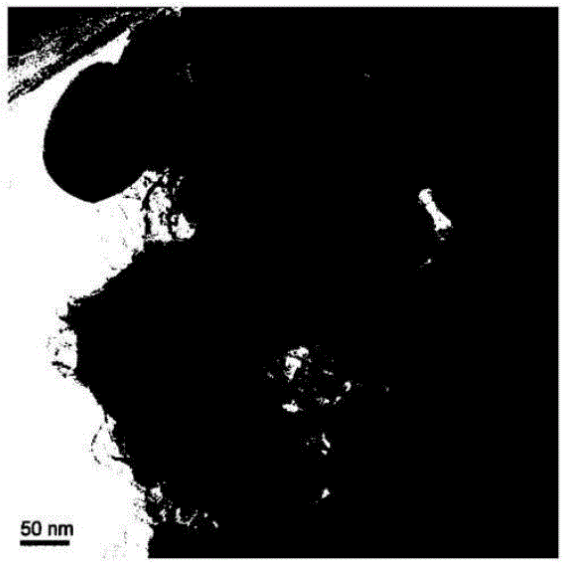

21: 2023/02946. 22: 2023/02/28. 43: 2023/05/09

51: G01C

71: Henan University of Urban Construction

72: DING, Leixiang, SUN, Yafei, JIANG, Yongtao, GAO, Ning, HOU, Shaoyang, GAO, Caiyun, ZHANG, Zhimin, ZHU, Baoxun, WANG, Xiaojing

54: PORTABLE SURVEYING AND MAPPING DEVICE

00: -

Disclosed is a portable surveying and mapping device including a protection box, telescopic support frames, rollers and a surveying and mapping instrument, where at least three telescopic support frames are hinged on an upper cover of the protection box; the surveying and mapping instrument can be disposed on the upper cover of the protection box, and can be accommodated in the protection box; the rollers are rotatably arranged at both sides of the protection box; and the telescopic support frames can rotate to the upside of the upper

cover, and a connecting handle is disposed between two of the telescopic support frames. the protection and storage box is provided to protect the surveying and mapping instrument; the rollers are provided to facilitate the movement and outdoor carrying of the surveying and mapping instrument; and the whole device can move with less time and effort like a draw-bar box,

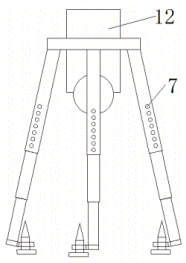

21: 2023/02947. 22: 2023/02/28. 43: 2023/05/09
51: F24H
71: China Institute of Water Resources and Hydropower Research, HUANENG LANCANG RIVER HYDROPOWER INC.
72: ZHANG, Lei, ZHOU, Hua, LIU, Yi, LI, Zhi, ZHANG, Guoxin, YU, Jiyuan, ZHANG, Tianwei, ZHANG, Guoquan, ZHENG, Lei, XIN, Jianda, ZHU, Zhenyang, SUN, Changmao, HE, Jinlong, MA, Xiaofang, LIU, Lu, LIU, Jinshan, LI, Ruyao
54: WATER TEMPERATURE AUTOMATIC BLENDING SYSTEM AND METHOD
00: -
The present invention discloses a water temperature automatic blending system and method, so that the automatic monitoring of data, the automatic control of valves, and the automatic blending of water temperature are realized, and the water cooling becomes more stable and efficient.

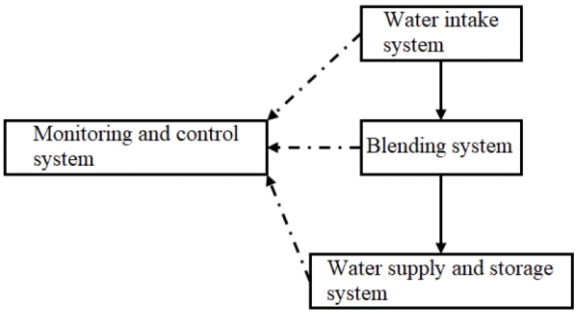

21: 2023/02948. 22: 2023/02/28. 43: 2023/05/09
51: C07D
71: Yantai University
72: GUAN, Yukun, WANG, Hao, ZHOU, Liting
54: PREPARATION METHOD AND USE OF STEREOISOMER IMPURITY TGA-I OF TICAGRELOR KEY INTERMEDIATE
00: -
The present invention discloses a novel preparation method of a stereoisomer impurity TGA-I of a ticagrelor key intermediate.

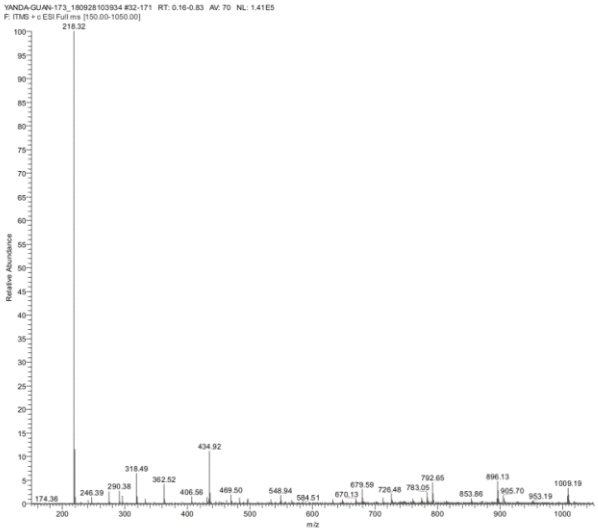

21: 2023/02950. 22: 2023/02/28. 43: 2023/05/03
51: B03D; C01B
71: Guangzhou Yueyouyan Mineral Resources Technology Co., Ltd, Institute of Resources Utilization and Rare Earth Development, Guangdong Academy of Sciences, Changsha Institute of Mining Research Co., Ltd, Zhengzhou University
72: LUO Yunbo, ZHANG Faming, XIAO Jinxiong, SHI Yunliang, WANG Chongqing
54: BENEFICIATION METHOD FOR RECOVERING GRAPHITE
00: -
A beneficiation method for recovering graphite, belonging to the field of mineral processing. The method involves coarse grinding of graphite ore to -4 mm, preferential selection of dissociated bulk graphite minerals by shaking table flotation, its tailings are then ground step by step to -2 mm, then shaking table flotation to recover the single dissociated graphite, its tailings are then ground fine until all graphite is essentially single dissociated, and the fine-grained graphite is recovered by flotation. This method has the advantage of recovering large pieces of graphite, especially it is beneficial to protect the original size of graphite and obtain

scarce large graphite products, and the process is simple, low cost and easy to operate.

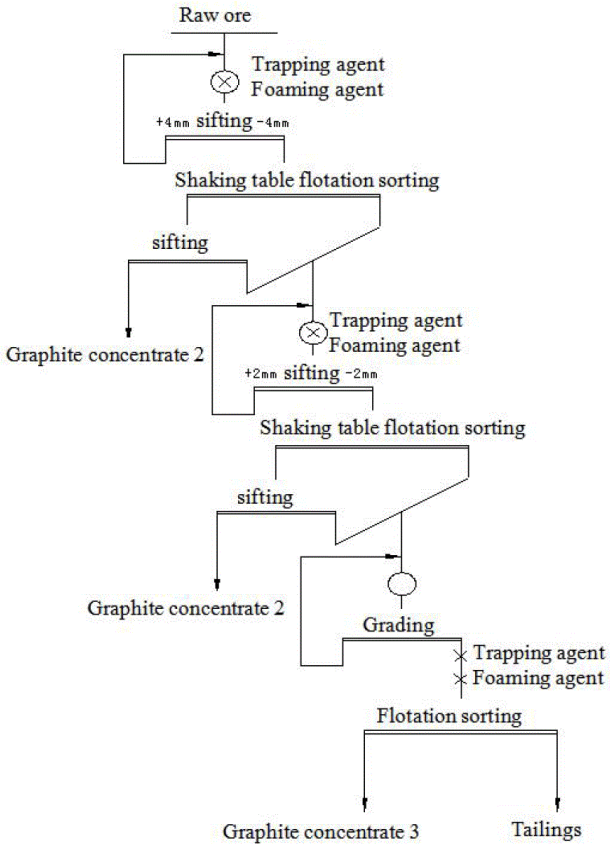

21: 2023/02951. 22: 2023/02/28. 43: 2023/05/03
51: F23D
71: Henan Yulong Science and Technology Research Institute Co., Ltd
72: Yongping KONG, Huanping ZHANG, Xiaoshuang XIONG, Lishan MENG, Ke ZHOU, Nan WANG, Qiaoyun XU, Rongxia CHEN, Xiaojun ZENG
33: CN 31: 2022114250488 32: 2022-11-15
54: ENVIRONMENTAL PROTECTION AND NOISE REDUCTION TYPE ALCOHOL-BASED LIQUID FUEL BURNER
00: -
The disclosure discloses an environmental protection and noise reduction type alcohol-based liquid fuel burner, which belongs to the field of burners. An environmental protection and noise reduction type alcohol-based liquid fuel burner, including a burner body, a connection cylinder fixed at the end of the burner body, an exhaust cylinder fixedly installed at one end of the connection cylinder, a filter net fixed inside the exhaust cylinder, and a cleaning assembly for cleaning the filter net set on the connection cylinder; the disclosure through the filter and activated carbon adsorption plate set inside the exhaust cylinder cooperate with each other to filter and purify the exhausted Through the filter and activated carbon adsorption plate set up in the interior of the exhaust canister, filter and purifying the exhaust gas, effectively preventing the pollution gas to the external environment, through the mutual cooperation of the cleaning assembly, lifting assembly, noise reduction assembly and protection box, it is convenient to clean the dust on the filter net, saving the trouble of disassembly, and at the same time, noise reduction and sound absorption treatment for the noise generated on the equipment, and it is convenient to check and repair the motor installed on the equipment.

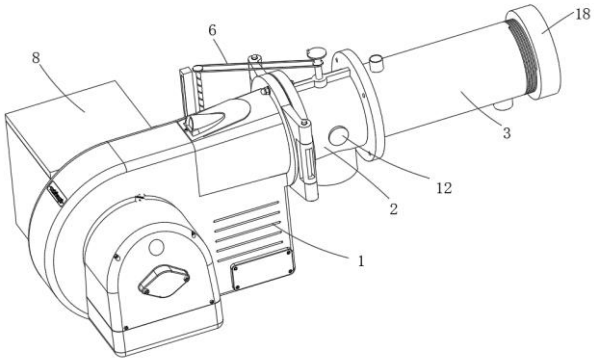

21: 2023/02952. 22: 2023/02/28. 43: 2023/05/03
51: C12M
71: Yantai Institute of China Agricultural University, Shandong Shouyin Ecological Environment Engineering Co. Ltd.
72: KONG Fanke, DONG Renjie, DING Shouyin, MA Shibao, DING Shiyou
54: ANAEROBIC FERMENTATION DEVICE WITH FUNCTION OF PRODUCING CLEAN AND RENEWABLE ENERGY
00: -
The invention discloses an anaerobic fermentation device with function of producing clean and renewable energy, belonging to the technical field of biogas, and its structure comprises a horizontal fermentation tank, wherein, two ends of the horizontal fermentation tank are respectively provided with a sewage inlet and a liquid outlet, and the liquid outlet is connected with a soft liquid storage tank, and the interior of the horizontal

fermentation tank is divided into a plurality of chambers by a plurality of baffles with heights lower than that of the horizontal fermentation tank, but the upper part of the fermentation tank is still a cavity, and a biogas slurry pipe is fixed on each baffle. The biogas slurry pipe extends from the bottom of the baffle to the top and goes deep into the adjacent chambers. A hot water circulating pipe is laid at the bottom of the horizontal fermentation tank, and the hot water circulating pipe is connected with the biogas outlet pipe at the top of the horizontal fermentation tank through a biogas combustion heating system. According to the invention, a horizontal fermentation tank is adopted, and a hot water circulating pipe is added at the bottom of the fermentation tank, so that the biogas slurry in the fermentation tank can maintain a certain temperature in winter; the front end of the fermentation tank is connected with the sewage pipe of the farm, and the fermentation tank is divided into a plurality of chambers by a baffle, so that the discharge of organic waste is not delayed for a sufficient fermentation time, the fermentation efficiency and the fermentation degree are improved, and the nutrition can be provided for the growth of crops, and the crops are not harmed at the same time.

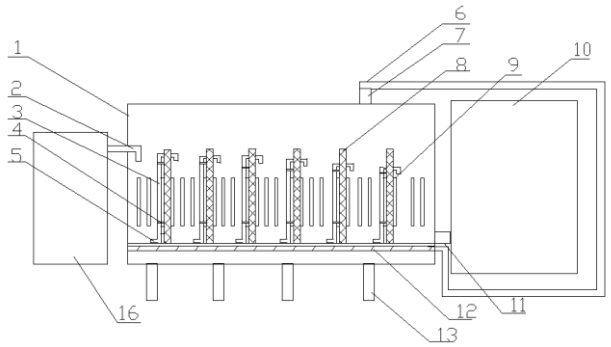

21: 2023/02953. 22: 2023/02/28. 43: 2023/05/03
51: A23K
71: Shihezi University
72: YAO, Jun, ZHANG, Wenju, LIU, Mengjian, NIU, Junli
33: CN 31: 202211664937X 32: 2022-12-23
54: FEED ADDITIVE FOR NEWBORN CALVES CONTAINING BACILLUS MEGATERIUM
00: -
The present invention provides a feed additive for newborn calves containing bacillus megaterium, and relates to the technical field of feed additives. The feed additive for calves of the present invention includes malt extract, bacillus megaterium, clostridium butyricum, gamma-aminobutyric acid (GABA), coenzyme R and other raw materials. The present invention, by making use of the synergy between raw materials, significantly improves the effect of bacillus megaterium, and has a positive effect on rumen development, digestion, balancing and regulation of microbial flora in the gastrointestinal tracts of calves, which can improve the feed intake and immunity of calves, and also feed utilization efficiency, thereby having a good application prospect.

21: 2023/02954. 22: 2023/02/28. 43: 2023/05/03
51: A01G; A01H
71: Qinghai Academy of Agriculture and Forestry Sciences, Datong Hui and Tu Autonomous County Agricultural Technology Extension Center
72: HOU Lu, MA Lin
54: BREEDING METHOD OF GREEN GRAIN SPRING WHEAT
00: -
The invention discloses a breeding method of green-grain spring wheat in the technical field of wheat breeding, which comprises the following steps: parent selection, flowering meeting planting, hybridization, generation addition, hybrid generation screening, generation screening and strain screening to obtain high-quality green-grain spring wheat varieties with high nutritional content and high yield. According to the invention, through crossing the male spring wheat material 04-11-3 with the winter Zhongpulv No.2, the iron content of 12-7-9 is 41.2mg/kg, which is 35.5 percent higher than that of Tongmai No.2, and the zinc content of 12-7-2 is 23.1mg/kg, which is 50 percent higher than that of Tongmai No.2, and 12-7-4 selenium is obtained.

21: 2023/02955. 22: 2023/02/28. 43: 2023/05/03
51: C12Q; G01N
71: Tianjin Institute of Environmental and Operational Medicine
72: LI Shuang, GAO Zhixian, ZHOU Huanying, PENG Yuan, HAN Dianpeng, REN Shuyue, QIN Kang, WANG Yu
54: DETECTION METHOD OF RACTOPAMINE BASED ON DNA HYDROGEL COATED WITH BIFUNCTIONAL CHEMICAL NANOENZYME

00: -
Disclosed are a DNA hydrogel, a preparation method and an application thereof, and relate to the technical field of food safety detection. The preparation method of the DNA hydrogel includes: preparing bifunctional chemical nano, preparing hydrogel side chain polymer and preparing DNA hydrogel coated with bifunctional chemical nanoenzyme; the DNA hydrogel prepared by this method and the detection method of ractopamine based on DNA hydrogel coated with bifunctional chemical nano-enzyme are also proposed. As a cross-linking agent of hydrogel, ractopamine aptamer is embedded with bifunctional chemical nanoenzyme. The combination of ractopamine and aptamer causes the hydrogel to collapse and release the embedded bifunctional chemical nanoenzyme, and the bifunctional chemical nanoenzyme catalyzes the reaction between hydrogen peroxide and TMB to produce color change; the color change is positively correlated with ractopamine concentration. This method has low detection limit, high sensitivity and good repeatability, and has important value in practical rapid field detection application.

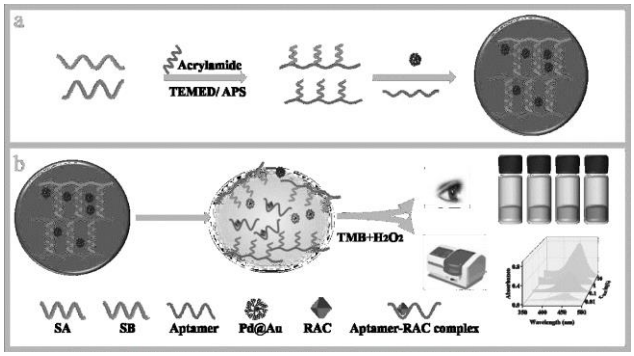

21: 2023/02956. 22: 2023/02/28. 43: 2023/05/03
51: G01N
71: Tianjin Institute of Environmental and Operational Medicine
72: GAO Zhixian, LI Shuang, ZHOU Huanying, WANG Yu, HAN Dianpeng, REN Shuyue, QIN Kang, PENG Yuan, CHEN Ruipeng

54: COLORIMETRIC SENSING SYSTEM FOR DETECTING KANAMYCIN

00: -
The invention relates to the technical fields of nano materials, biosensors and food safety detection, in particular to a colorimetric sensing system for detecting kanamycin. Based on the three-in-one chemical nanoenzyme (hemin at Fe-MIL-88NH2/PtNP), the invention develops a colorimetric aptamer sensing system with high sensitivity and high efficiency, which is used for detecting kanamycin (KAN) remaining in food. The synthetic method of chemical nano-enzyme is simple, with high yield, easy storage and excellent stability. This method has the advantages of simple operation, quick response and high practical application value in food detection.

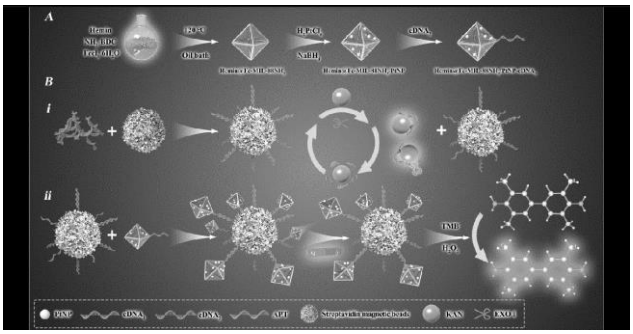

21: 2023/02957. 22: 2023/02/28. 43: 2023/05/08
51: G01N
71: Tianjin Institute of Environmental and Operational Medicine
72: GAO Zhixian, LI Shuang, ZHOU Huanying, HAN Dianpeng, WANG Yonghui, WANG Yu, REN Shuyue, QIN Kang, PENG Yuan

54: MELAMINE DETECTION METHOD BASED ON DNA HYDROGEL AND MICROFLUIDIC CHIP

00: -
Disclosed is a melamine detection method based on DNA hydrogel and a microfluidic chip. The invention combines melamine detection with microfluidic chip, melamine aptamer is used as cross-linking agent of DNA hydrogel, and coated nano-gold is used as the basis for colorimetric detection and quantitative analysis. The principle is that when melamine exists, it competitively combines with its aptamer, leading to the disintegration of DNA hydrogel and the release of encapsulated nano-gold, so as to achieve the purpose of visual detection and quantitative measurement of melamine. In order to realize the quantitative detection of melamine, it may be introduced into microfluidic chip by combining the properties of DNA hydrogel, and based on the color depth of the copolymer solution after the reaction, it may be achieved by taking pictures and analyzing the gray value by software. Its advantage is that it may realize portable and sensitive on-site detection

of target without skilled operators and large instruments.

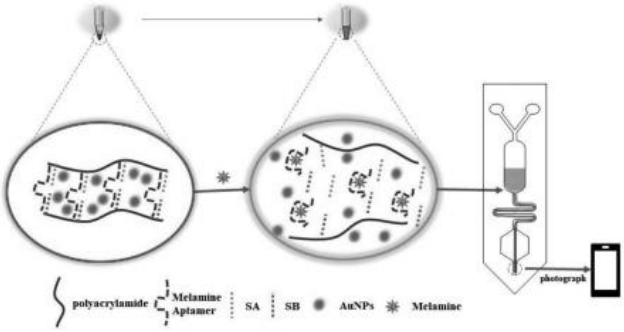

21: 2023/02958. 22: 2023/02/28. 43: 2023/05/09
51: H02M
71: Chen Xiangyu
72: Chen Xiangyu
54: A KIND OF DIRECT CURRENT AND ALTERNATING CURRENT CONVERSION DEVICE
00: -
A kind of direct current, alternating current conversion device, comprising a first support base, a second support base, a third support base, a fourth support base, a synchronous generator, a large hollow rotation shaft, a medium hollow rotation shaft, a solid rotation shaft, large bearings, medium bearings, small bearings, DC motor, pulleys and power mechanisms; a small bearing, a medium bearing and a large bearing are nested on the first support base, a large bearing is nested on the second support base, a medium bearing is nested on the third support base, and a small bearing is nested on the fourth support base, one end of the solid rotation shaft is located in the small bearing on the first support base, and the other end of the solid rotation shaft passes through the second support base and the third support base to connect with the small bearing on the fourth support base, one end of the solid rotation shaft extends out of the fourth support base, which is then connected to the DC motor, one end of the solid rotation shaft located on the first support base extends out of the first support base, and the extended end of the solid rotation shaft is connected to the synchronous generator.

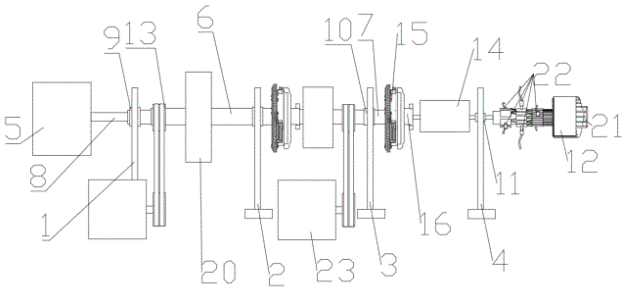

21: 2023/02959. 22: 2023/02/28. 43: 2023/05/10
51: E21C
71: China University of Mining and Technology, Shaanxi Yulin Energy Group Yushen Coal Power Co., Ltd.
72: SUN, Qiang, FAN, Limin, MA, Liqiang, BAI, Ruhong, ZHENG, Jing, ZHANG, Jiaqi, HE, Wei
33: CN 31: 202211478294X 32: 2022-11-23
54: WATER-RETAINING COAL MINING METHOD FOR WORKING FACES OF SUPER HIGH SEAM BY SLICING AND STAGE COAL PILLAR FILLING
00: -
Disclosed is a water-retaining coal mining method for working faces of a super high seam by slicing and stage coal pillar filling. The water-retaining coal mining method includes: using a coal mining manner of downward mining for the super high seam; reserving stage coal pillars between adjacent working faces; providing a grouting pipeline on a roadway base plate close to the stage coal pillars; providing a grouting borehole in a connection roadway of the stage coal pillars, and providing two grouting boreholes in goaf of the adjacent working faces separately; performing grouting by the grouting boreholes to form a filling body; and coordinating the working faces in the higher slice and the lower slice until a water-retaining coal mining operation of the working faces of the whole super high seam is completed. The method can effectively protect an ecological water level and an aquifer.

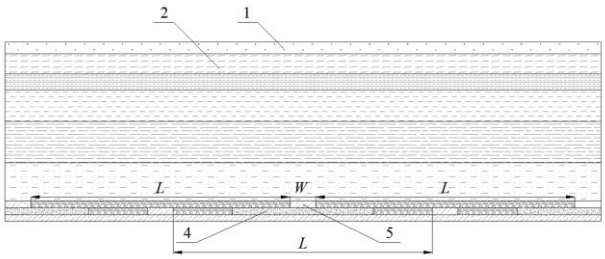

21: 2023/02960. 22: 2023/02/28. 43: 2023/05/03

51: A63B
71: Zhengzhou University of Aeronautics
72: CAI, Guanlan, ZHANG, Shanshan
54: TABLE TENNIS LAUNCHER FOR TRAINING
00: -
The present invention discloses a table tennis launcher for training, which comprises a base, wherein a moving assembly is arranged on an outer wall of a top end of the base, a rotating assembly is arranged on an outer wall of the moving assembly, a assembly is arranged on an outer wall of the rotating component, and a launching assembly is arranged on an outer wall of the lifting assembly; a first installation groove is formed on the outer wall of the top end of the base, a first rotating motor is mounted on one side of an inner wall of a bottom end of the first installation groove, a first sprocket is sleeved on a top end of a output shaft of the first rotating motor, and a chain is sleeved on an outer wall of the first sprocket; the moving assembly arranged in the present invention is convenient for a launching cylinder to move horizontally, which improves flexibility of the device, avoids singleness of servicing positions and improves training effects; the rotating assembly arranged is convenient for adjusting horizontal angles of the launching cylinder, which improves flexibility of servicing angles, and is more in line with actual service situations and more conducive to training.

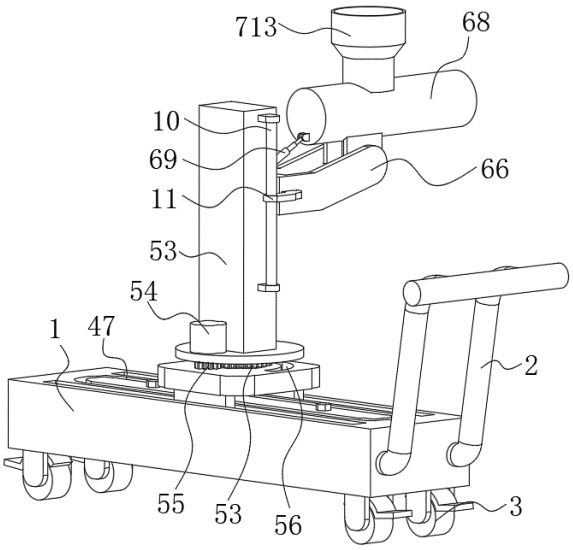

21: 2023/02961. 22: 2023/02/28. 43: 2023/05/08
51: E02D
71: Harbin Institute of Technology, Changchun Jianye Group Co.
72: Long WANG, Fengxia JIANG
54: A METHOD OF MAKING SLOPE PROTECTION FROM SCRAP TYRE INFILLED CONCRETE COMPOSITE ELEMENTS
00: -
The present invention discloses a method of making slope protection with scrap tyre infused concrete composite components, comprising the following steps: S1. make a scrap tyre concrete ring-shaped component, putting the scrap tyre in turn on the air mould, cutting a hole on the surface of the tyre, subsequently adding a suitable type of concrete to the scrap tyre until the whole tyre cavity is filled, after 24h the concrete solidifies to form the scrap tyre concrete After 24h, the concrete will solidify to form the waste tyre concrete ring assembly, after taking it off, the waste tyre concrete ring assembly will be completed after 7 days of regeneration; S2. clean the slope, clear away the miscellaneous soil and loose layer which are easy to slide and affect the stability of the slope, then use the trench digger to compact the slope surface; S3. make the foundation under the slurry slate, the foundation under the slurry slate is built with M10 mortar; S4. lay the waste tyre; S5. construct the top surface of the slope treatment. The advantages of the above method are that it avoids the disposal of a large number of waste tyres, is cost effective and environmentally friendly, and relieves the pressure on environmental protection and the lack of resources.

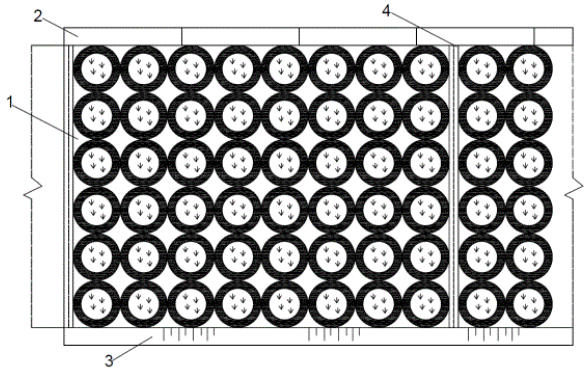

21: 2023/02962. 22: 2023/02/28. 43: 2023/05/08
51: A61H
71: Taiyuan University of Technology
72: Xiaogang WU, Jianhao YU, Quanyou ZHANG, Hongmei GUO, Xiaobin WANG, Zhipeng GAO, Yanqin WANG, Yongwang ZHAO, Pengcui LI, Kai ZHANG, Yingze QIN, Xiaochun WEI, Weiyi CHEN

54: A HEAD AND NECK MASSAGER
00: -
The invention discloses a head and neck massager, which comprises a swing belt plate and an annular baffle. The inner side of the swing belt plate is provided with a number of head massage parts that can be retracted and adjusted towards the head. The two ends of the swing belt plate are provided with drive elements, and the swing belt plate is rotatably connected with the inner side of the annular baffle through the drive elements; It also includes a neck support mechanism arranged side by side in the annular baffle. The drive element is movably arranged on the annular baffle in a horizontal direction relative to the neck support mechanism. The neck support mechanism includes a rotation support part and a neck support roll. The rotation direction of the neck support roll is the same as the extension direction of the neck. The surface of the neck support roll is provided with several neck pillow massage heads. The invention adopts one of the above head and neck massager to realize the triple functions of head, neck massage and temple massage. The overhead swing massage improves the massage effect, with strong overall function and strong practicability.

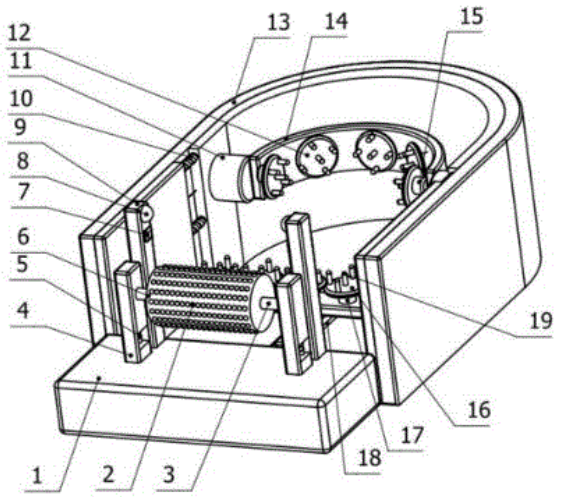

21: 2023/02963. 22: 2023/02/28. 43: 2023/05/10
51: B01J
71: Beijing University Of Technology, China Automotive Technology And Research Center Co., Ltd.
72: Guizhen ZHANG, Xiaodong YANG, Zhenguo LI, Shuzhen LI, Long ZHANG, Yuankai SHAO

54: THE PREPARATION OF A PD THREE-WAY CATALYST LOADED ON A SPECIFIC CRYSTAL SURFACE CEO2 CARRIER MODIFIED BY ALD
00: -
The invention discloses the preparation of a Pd three-way catalyst loaded on a specific crystal surface CeO2 carrier modified by ALD, which comprises the following steps: weighing a certain amount of cerium precursor and sodium hydroxide precipitator into a beaker for dissolution and reaction, and then transferring the mixture to a self-pressure reactor for hydrothermal reaction for 24h; Wash and dry the mixed solution after reaction, grind it into powder and place it in a muffle furnace, calcine it at 500-1000 degrees celcius for 4-6 hours to obtain cerium dioxide carrier with different morphology; The prepared cerium oxide carrier was mixed with the noble metal solution by impregnation method, and the supported noble metal cerium-based catalyst was finally obtained; Al2O3 of 5-20 cycles was coated by atomic layer deposition (ALD). The invention adopts the preparation of the AlD modified specific crystal surface CeO2 carrier loaded Pd three-way catalyst, which can not only maintain the high activity (100) crystal surface of CeO2 under high temperature conditions, but also have better dispersion than the untreated Pd catalyst, thus effectively improving the low-temperature activity and thermal stability of the three-way catalyst of noble metal catalyst.

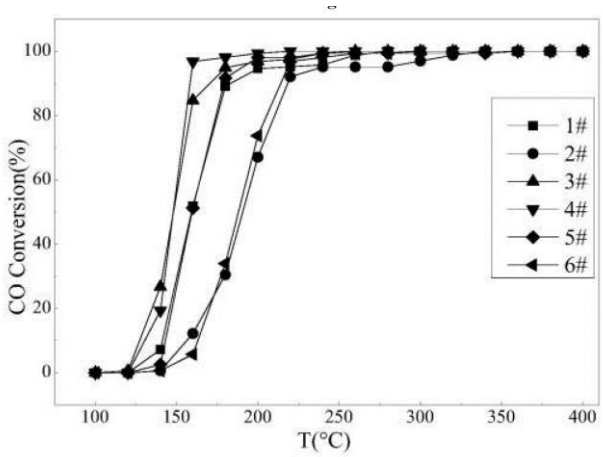

21: 2023/02964. 22: 2023/02/28. 43: 2023/05/10
51: B01J
71: Beijing University Of Technology, China Automotive Technology And Research Center Co., Ltd.

72: Guizhen ZHANG, Long ZHANG, Zhenguo LI, Shuzhen LI, Yuankai SHAO, Xiaodong YANG

54: A METHOD FOR IMPROVING THE SINTERING RESISTANCE OF NOBLE METAL NANOCATALYSTS

00: -

The invention discloses a method for improving the sintering resistance of noble metal nano catalyst, which comprises the following steps: dissolve the noble metal nano-catalyst into tris-HCl buffer solution, take a 30-45 degrees celcius water bath and continuously stir until the mixture is uniform; Add plant polyphenol pyroxylic acid into the above solution and stir for 2~24h; The product is centrifugally washed, washed with water, washed with alcohol to no Cl -, dried at 80 degrees celcius for 8 to 12 hours, grinded into powder, treated under inert atmosphere, and the carbon layer is burned in the air. The invention adopts the above method to improve the sintering resistance of the noble metal nano-catalyst, and utilizes the characteristics of low-cost plant polyphenols self-polymerizing into a film under alkaline conditions to form an organic polymer film with a certain structure on the surface of the catalyst. The organic film is successively treated at high temperature in inert gas and air atmosphere, which enhances the interaction between the metal nano-particles and the carrier, and improves the sintering resistance of the noble metal. The catalyst system can be used for the preparation of three-way catalysts for CO exhaust emission control and automobile exhaust purification.

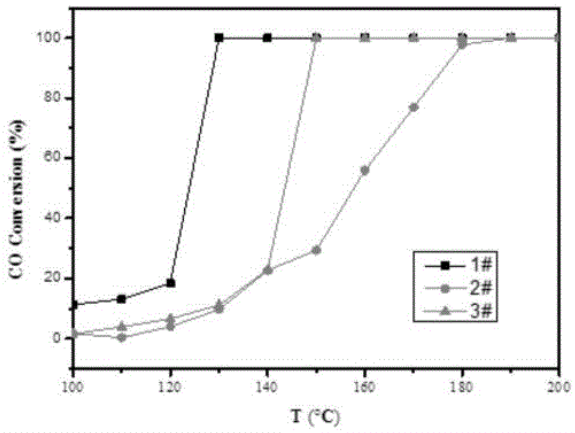

21: 2023/02965. 22: 2023/02/28. 43: 2023/05/03
51: C22C
71: Wuhan University of Science and Technology
72: Lin WU, Ying LIU, Ya HU, Shi Hu, Xiaoyu YANG, Yilai ZHOU, Baoguo ZHANG, Zhiyuan LIAO, Ao CHEN, Chang XU, Linghui XIANG, Shicheng RUAN, Jiageng SUN

54: A PREPARATION METHOD OF INSULATING COATING COATED WITH ORIENTED SILICON STEEL

00: -

The invention discloses a preparation method of insulating coating coated with oriented silicon steel. The insulating coating is calculated by mass fraction, including 15-25 portions of small particle silica sol, 15-25 portions of large particle silica sol, 10-20 portions of aluminum dihydrogen phosphate solution, 0.1-1 portions of additives, and 29-59.9 portions of deionized water. The preparation methods include: S1. Add large particle silica sol into small particle silica sol and stir evenly to obtain silica sol mixture; S2. Add deionized water to the silica sol mixture obtained in step S1, and stir evenly to obtain the mixed silica sol aqueous solution; S3. Add aluminum dihydrogen phosphate into the mixed silica gel aqueous solution obtained in step S2, and stir evenly to obtain the mixed solution; S4. Add additives into the mixture obtained in step S3 and continue stirring for 30min to obtain insulating coating coated with oriented silicon steel. The invention realizes chromium-free oriented silicon steel insulating coating, the prepared coating has good adhesion, heat resistance and corrosion resistance equivalent to chromium-containing insulating coating, improves the comprehensive performance of oriented silicon steel and extends its service life.

21: 2023/02966. 22: 2023/02/28. 43: 2023/05/03
51: C22C
71: Kunming University of Science and Technology
72: Hongxi LIU, Yueyi WANG, Xuanhong HAO, Yuchong LIU, Pengyuan ZHOU, Xiaowei ZHANG

54: A LOW DENSITY REFRACTORY HIGH ENTROPY ALLOY MATERIAL AND METHOD OF PREPARING MOLTEN CLADDING LAYER

00: -

The present invention discloses a low-density refractory high-entropy alloy material and a method for the preparation of cladding layers, comprising Ti, Al, Mo, Nb, Cr and Zr. The molar ratios of Ti, Al, Mo, Nb, Cr and Zr are Ti: Al: Mo; Nb: Cr: Zr= 1:1:1:1:1. Ti, Mo, Nb, Cr and Zr are all high melting point

elements and Al is a low density element. The present invention uses a low density refractory high entropy alloy material and cladding preparation method as described above, the clad layer has a good macroscopic morphology, and the clad layer has a fine organization, no cracks, the clad layer has high bonding strength with the base material, and the clad layer has a high microhardness. High-entropy alloys show a number of organisational and performance characteristics that are different from those of conventional alloys and are a material field with academic value and potential for aerospace applications.

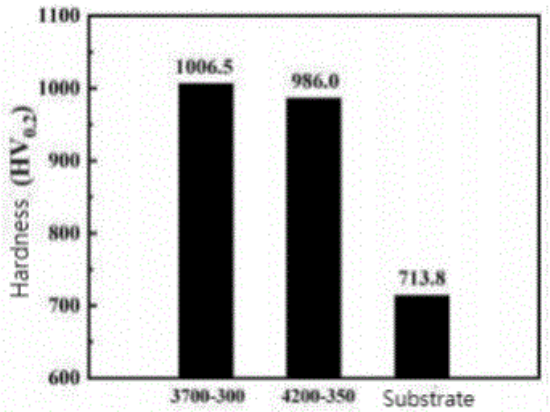

21: 2023/02967. 22: 2023/02/28. 43: 2023/05/03
51: G06Q
71: China Railway First Engineering Group Second Engineering Co., Ltd, Dalian Jiaotong University
72: Fangang JIN, Shuai ZHENG, Jiancheng BI, Zhifeng CONG, Yang DONG

54: AN INTELLIGENT MANAGEMENT METHOD FOR THE WHOLE LIFE CYCLE OF BRIDGE STRUCTURE IN URBAN WATER SYSTEM ENGINEERING

00: -

The invention discloses an intelligent management method for the whole life cycle of bridge structure in urban water system engineering, including Step S1: Establish the multi-factor time series prediction rules and the calculation model for bridge deck deformation; Step S2: According to the multi-factor time series prediction rules of bridge deck deformation, the bridge deck deformation learning samples are established, and the bridge deck deformation learning samples are divided into multiple calculation units according to continuous time points. Step S3: Regression fitting is performed on each calculation unit to establish its own independent calculation unit mapping function; Step S4: Establish the logical relationship of information transmission between each calculation unit, and obtain the bridge deformation prediction results by combining the independent calculation unit mapping function; The invention solves the problem that the time series of the existing bridge engineering structure deformation data prediction is not an independent influence in the continuous time domain, but has a significant lag, which in turn causes the prediction result to have certain limitations.

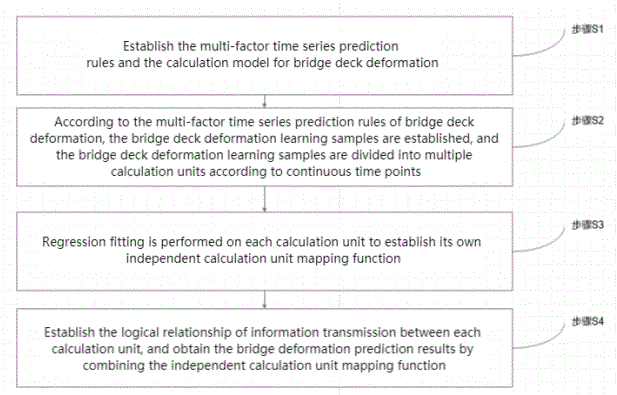

21: 2023/02968. 22: 2023/02/28. 43: 2023/05/03
51: B04C
71: Henan Polytechnic University
72: Yanhe NIE, Changliang SHI, Qiang WANG

54: A MAGNETICALLY CONTROLLED, FULL-ANGLE FEED, THREE-PRODUCT HEAVY MEDIA CYCLONE

00: -

The invention discloses a magnetically controlled full-angle feed three-product heavy media cyclone, comprising a cyclone barrel, a flow guide device and a magnetically controlled device, the magnetically controlled device comprising an external magnetic system set on the outside of the cyclone barrel and an internal magnetic system set inside the cyclone barrel, the internal magnetic system comprising a number of internal magnetic cores and a first fixing device fixing a number of internal magnetic cores inside the cyclone barrel, the external magnetic system comprising a number of external magnetic rings and a second fixing device for fixing a number of external magnetic rings to the outside of the

cyclone barrel, the external magnetic rings being adapted to the internal magnetic cores in the same number; the flow guide device is provided at the inlet end of the cyclone barrel. The above-mentioned structure of a magnetically-controlled, full-angle, three-product, heavy media cyclone effectively disperses the material and facilitates the elimination of blockages; multiple diversions effectively suppress the mudification phenomenon, facilitate the separation of light and heavy products and ensure the separation efficiency.

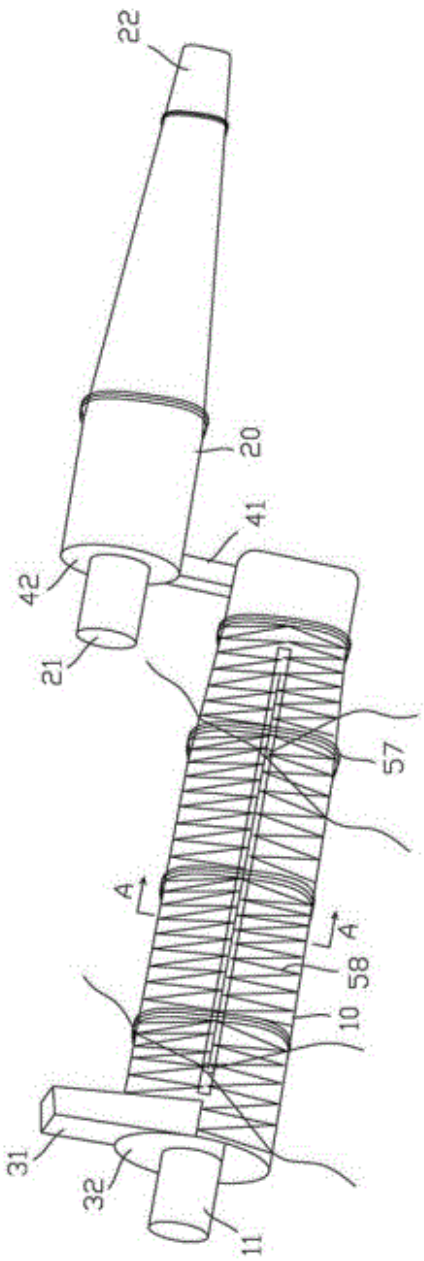

21: 2023/02969. 22: 2023/02/28. 43: 2023/05/03
51: A23F
71: Guizhou special education secondary vocational and technical school
72: Ke ZHANG
54: A GREEN TEA PROCESSING PROCESS
00: -
The invention discloses a green tea processing process, S1 pick: pick green tea fresh leaves; S2 soak: soak the tea green into the enzyme solution, the soaking time is 10min; S3 spread: spread the tea green after soaking in a clean, hygienic, ventilated and airy storage tank or storage room, the leaf

thickness is 5-8cm, the time is 6-18h; S4 kill: put the young leaves after spreading into the hot air killing machine, at a temperature of 250 degrees celcius;S5 Knead: take out the tea leaves from the greening process, spread them out to cool them down and then knead them; S6 Dry: put the tea leaves into the drying machine for drying, and fry them until they have tea aroma. The invention uses a green tea processing process described above, using enzyme liquid treatment to promote the hydrolysis of large molecules within the tea green, to enhance the amino acid content and sugar molecule content in the tea clear; decompose the catechins in the tea clear, to reduce the bitter and astringent substances, the buds and stalks to dissipate water evenly, to ensure the quality of the later processing, and to improve the quality of tea leaves.

21: 2023/02970. 22: 2023/02/28. 43: 2023/05/08
51: B23K
71: Zhengzhou Research Institute of Mechanical Engineering Co., Ltd., China Academy of Machinery Ningbo Academy of Intelligent Machine Tool Co., Ltd., Jiangsu University of Science and Technology
72: Yuanxun Shen, Junlan Huang, Xiupeng Li, Datian Cui, Juan Pu, Qin Wang, Mengjie Nie, Lei Zhang, Jian Qin, Yinyin Pei
33: CN 31: 202210705471.7 32: 2022-06-21
54: AN AL-SI-CU BRAZING FILLER METAL FOIL AND A PREPARATION METHOD AND APPLICATION THEREOF
00: -
The invention relates to the technical field of brazing, in particular to an Al-Si-Cu brazing filler metal foil and a preparation method and application thereof. An Al-Si-Cu brazing filler metal foil comprises a first surface layer, a first intermediate layer, a core layer, a second intermediate layer and a second surface layer successively connected; The first surface layer, the second surface layer and the core layer include Al-Si alloy layer; The first intermediate layer includes Al foil layer; The second intermediate layer includes Cu foil layer; The mass ratio of Al, Si and Cu in Al-Si-Cu brazing filler metal foil is 67-69:4-6:25-27. The preparation methods include: Al foil and Cu foil coated with flux paste were hot-dipped plated in Al-Si alloy molten solution, then stacked, and heated and pressurized composite treatment. The Al-Si-Cu brazing filler metal foil of the invention has the characteristics of low melting temperature, good flow performance, strong slag discharge and gas removal ability, etc. The problem that Al-Si-Cu filler metal is difficult to be processed into brazing filler metal foil due to its brittleness is overcome.

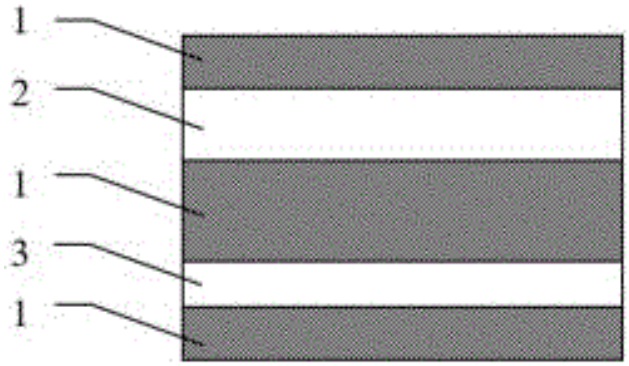

21: 2023/02971. 22: 2023/02/28. 43: 2023/05/08
51: B23K
71: West Anhui University, Anhui Lu'an Hengyuan Machinery Co., Ltd.
72: ZHU,Yanyan, SHI, Yun, CHEN, Rongna, LI, Wei, WANG, Zhihui, WANG, Ya
33: CN 31: 2023101688997 32: 2023-02-27
54: A WELDING ROBOT FOR WELDING PRECISION ELECTRONIC DEVICE
00: -
The present invention discloses a welding robot for welding precision electronic device, which relates to the technical field of welding devices, comprising a base plate, also comprising: a detection mechanism provided on one side of the base plate, further comprising a bearing rod slidingly provided on one side of a support plate, the two sides of the bearing rod are fixedly connected with the pressure accumulator cylinder and the diffusing cartridge separately, and ends of the bearing rod are fixedly connected to the pressure accumulator arms, a sense block is slidely provided within the diffusing cartridge, and one side of the support plate is provided with a drive assembly, and the rubber band partially seals the weld bead, the pressure accumulator arm drives the pressure accumulator block to move downwards through the pressure accumulator rod, the pressure is increased in the pressure accumulator cylinder, and the pressure is transferred into the communicating housing through the connecting tube, when the weld bead is completely sealed, the pressure is transferred into the diffusing cartridge, the sense rod in the diffusing cartridge moves, under the action of the reset block,

an air storage assembly is driven to move to realize material discharging, when there is a gap in the weld bead, the pressure is released, and the sense rod is still, the working piece is transmitted to the welding position by the feeding plate and welded again to realize the detection and screening of the working piece.

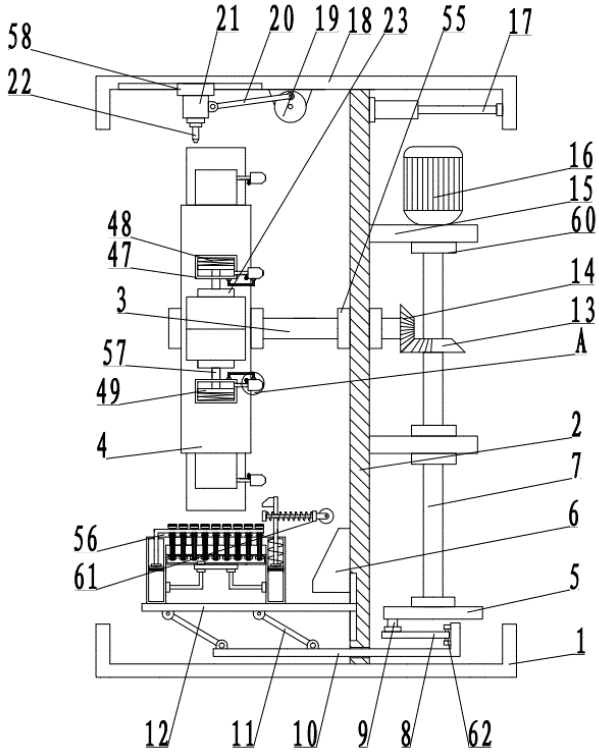

21: 2023/02972. 22: 2023/02/28. 43: 2023/05/08
51: C12P; G01N
71: Changzhou Vocational Institute of Engineering
72: DENG, Yuying, GAO, Zhicheng, XUE, Yuhan, LI, Yingxue, JI, Zhen, LIU, Qiaoyun, XU, Jin, LI, Juanhong

54: CONSTRUCTION METHOD OF SYSTEM FOR MEASURING STRAW METHANOGENESIS POTENTIAL

00: -

The present invention discloses a construction method of a system for measuring straw methanogenesis potential, including the following steps: preparing inocula from rumen fluid and activated sludge at different proportions, mixing the inocula with methanogenic metal cofactors and straws, and then selecting appropriate anaerobic digestion conditions to construct an efficient fermentation system. The construction method of the present invention can be used in straw methanogenesis potential test experiments.

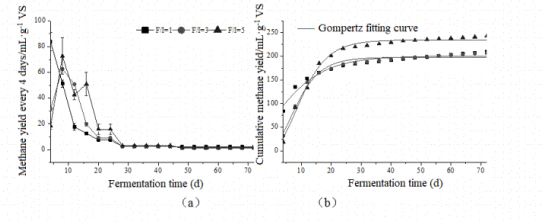

21: 2023/02973. 22: 2023/02/28. 43: 2023/05/08
51: G09B
71: HEBEI CHEMICAL AND PHARMACEUTICAL COLLEGE
72: Mina HE

54: SITUATIONAL TEACHING AID FOR TEACHING

00: -

The present invention relates to the technical field of teaching aids for teaching, and more particularly to a situational teaching aid for teaching. The teaching aid includes a base plate and a display frame, wherein a height adjustment mechanism is mounted on the base plate; a height adjustable mounting plate is disposed at the top of the height adjustment mechanism; a positioning groove is disposed in the center of the mounting plate; a support plate is disposed at the bottom of the display frame; a lower end of the support plate is fixedly connected to a positioning base adapted to the positioning groove; an upper surface of the mounting plate is located on one side of the positioning groove, and is rotatably connected to a plurality of limit plates; and a lower surface of the limit plate presses against an upper surface of the positioning base. In the present invention, a quick assembly-and-disassembly component is disposed between a display component and the mounting plate, such that the display screen can be quickly assembled and disassembled; when the teaching aid is not used, the display screen can be separately removed and stored, thereby improving safety; furthermore, the height adjustment mechanism is disposed between the base plate and the mounting plate, thereby solving the problems of inconvenient display screen assembly and disassembly and poor elevating adjustment mode at present stage.

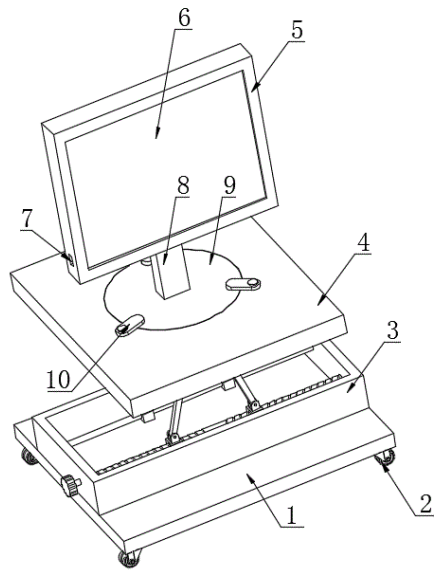

21: 2023/02974. 22: 2023/02/28. 43: 2023/05/08
51: G09B
71: HEBEI CHEMICAL AND PHARMACEUTICAL COLLEGE
72: Zhixian LI
54: ADJUSTABLE DISPLAY BOARD FOR EDUCATION
00: -
The present invention belongs to the technical field of teaching equipment, in particular to an adjustable display board for education, comprising a display frame, a display hanging member, a limiting member, an angle adjusting member and a support bracket. The display frame is in rotational connection with the display hanging member, and the two sides of the display frame are fixedly connected with the limiting member. The limiting member is arranged matingly with the display hanging member. The adjustable display board for education designed by the present invention can enable hanging of a plurality of publicity board posters with different contents on the display hanging members through the design of providing a plurality of display hanging members in the display frame, and can facilitate the adjustment and display of display boards with different publicity contents through the mating and adjustment of the limiting members, thereby improving the effect of use. The display height and display angle of the display frame can be adjusted conveniently through the mating design between the support bracket and the angle adjusting member to ensure that the display frame can be adjusted to the best display angle in different use environments to meet the needs of use.

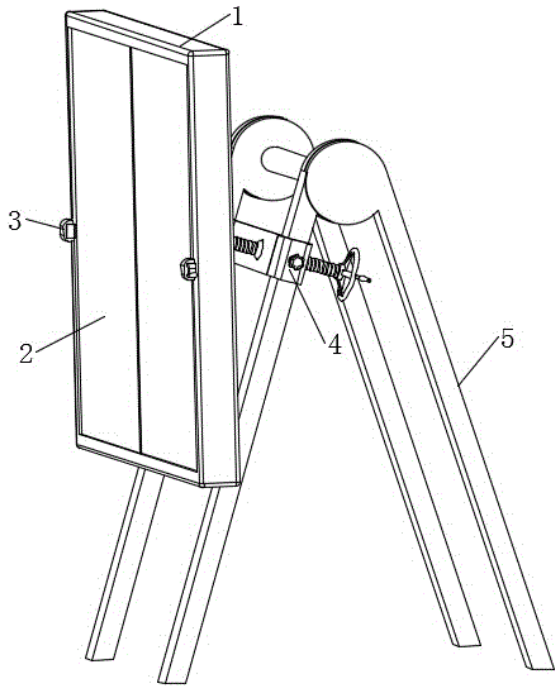

21: 2023/02975. 22: 2023/02/28. 43: 2023/05/08
51: C12P
71: Fuzhou University
72: Chen ZHANG, Pai LIU
54: A PREPARATION METHOD FOR IMPROVING THE EMULSIFICATION OF ALKALI EXTRACTION LEAF BIOMASS PROTEIN
00: -
The invention discloses a preparation method for improving the emulsification of alkali extracted leaf biomass protein. After the protein product extracted from the cell wall of leaf biomass is degraded by stomach protein or alkaline protease, the emulsification is greatly enhanced. It can be used as an emulsifier in food processing, and its emulsification effect is higher than that of egg white protein emulsifier. Adding the enzyme-hydrolyzed alkaline leaf biomass protein into the emulsified sausage has the effect of improving its emulsification ability, and has a good flavor, and the texture characteristics of the ham sausage have been well improved; The application of enzyme-hydrolyzed alkaline leaf biomass protein emulsifier to replace egg white protein in cake processing can improve

product quality, reduce production costs and save baking time.

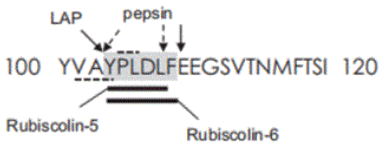

Figure 2 Schematic diagram of Rubisco site cut by pepsin

21: 2023/02976. 22: 2023/02/28. 43: 2023/05/08
51: G09B
71: HEBEI CHEMICAL AND PHARMACEUTICAL COLLEGE
72: Leizhe HAO
54: ADJUSTABLE TEACHING AID FOR POSTURE CORRECTION TRAINING
00: -
The present invention belongs to the technical field of posture training teaching aids, and in particular relates to an adjustable teaching aid for posture correction training. The adjustable teaching aid comprises a supporting bracket, an adjusting frame, tightening pieces, a first correcting piece and a second correcting piece, wherein the adjusting frame is slidably connected to the supporting bracket, the tightening pieces are symmetrically and slidably connected to the adjusting frame, and the second correcting piece is slidably connected to a part, above the adjusting frame, of the supporting bracket. According to the adjustable teaching aid for posture correction training, through the design of the adjusting frame and the tightening pieces, legs of trainees with different body forms can be brought together, so that the application scope is improved, and it is ensured that auxiliary correction can be performed on the legs of the trainees during posture correction; through the matching design of the first correcting piece and the second correcting piece, auxiliary correction can be performed on a waist and a back of the trainee, so that the adjustable teaching aid is also suitable for people with different body forms, and the use effect is improved; and through the design, training teaching aids with other functions can be conveniently added to the upright column for use.

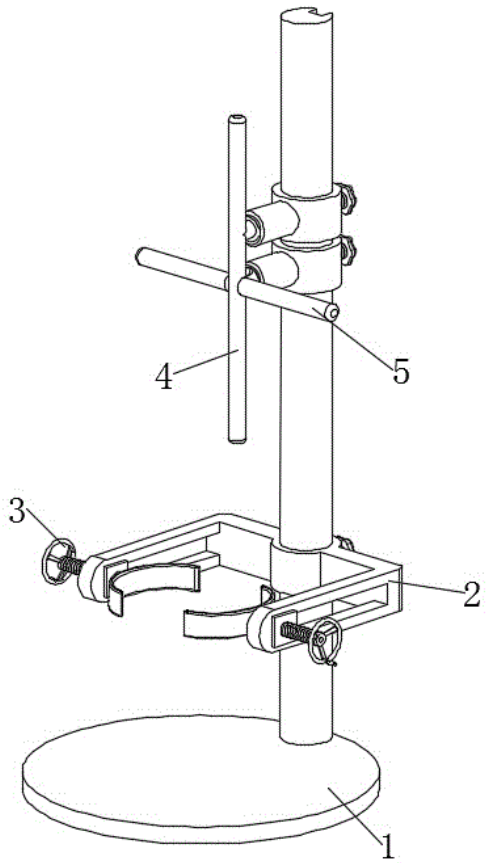

21: 2023/02977. 22: 2023/02/28. 43: 2023/05/08
51: G01N
71: China University of Mining and Technology
72: Guangjun Feng, Yanming Zhu, Meng Wang, Sijian Zheng, Yu Song
54: A MEASURING DEVICE AND METHOD FOR MONITORING THE PROCESS OF CARBON DIOXIDE DISPLACING METHANE IN SHALE RESERVOIR
00: -
The invention discloses a measuring device and method for monitoring the process of carbon dioxide displacing methane in shale reservoir, belonging to the technical field of shale reservoir reservoir physical property characterization and nuclear magnetic resonance application. It includes low field nuclear magnetic resonance tester, sample chamber system, reference chamber system, high pressure gas supply system and waste gas recovery system. The methods are: sample preparation and pretreatment, gas tightness detection of measuring device, establishment of calibration formula of free methane signal quantity, establishment of calibration formula of adsorbed methane signal quantity, and

realization of dynamic characterization of methane displacement process by carbon dioxide in shale reservoir. The invention provides a measuring device and method for monitoring the process of carbon dioxide displacing methane in shale reservoir, which is simple and convenient to operate, and can also dynamically monitor and determine the process and efficiency of carbon dioxide displacing methane at any time point.

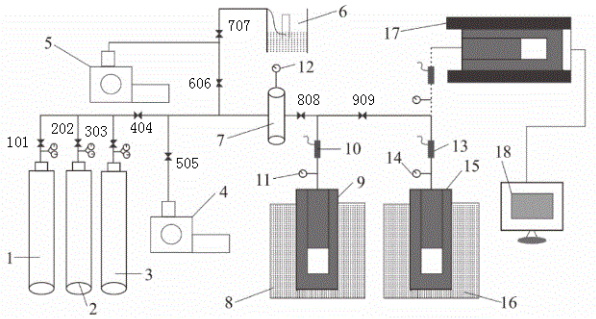

21: 2023/02978. 22: 2023/02/28. 43: 2023/05/08
51: G09B
71: HEBEI CHEMICAL AND PHARMACEUTICAL COLLEGE
72: Leizhe HAO
54: TEACHING TOOL DISPLAY STAND
00: -
The present invention belongs to the technical field of display stands, in particular to a teaching tool display stand, which comprises a base, a limiting member, support frames, support plates and inserting connection members. Both ends of the base are slidably inserted with a limiting member, and the limiting member is arranged in mating connection with the support frames; the support frames are matingly inserted on the base, and inserting connection members are matingly inserted on the support frames. Two inserting connection members are symmetrically provided at both ends of the support plate. The teaching tool display stand designed by the present invention allows the support frames to be conveniently removed from the base through the mating design of the limiting member and the limiting block. When the display stand is being transported, the floor area and the transportation costs can be reduced and convenient assembly and disassembly can be achieved. Through the mating design of the support plates and the inserting connection members, the spacing between two support plates on the support frames can be adjusted according to the size of different teaching tools, realizing the reasonable use of the placement space on the support frames and providing an effect of use.

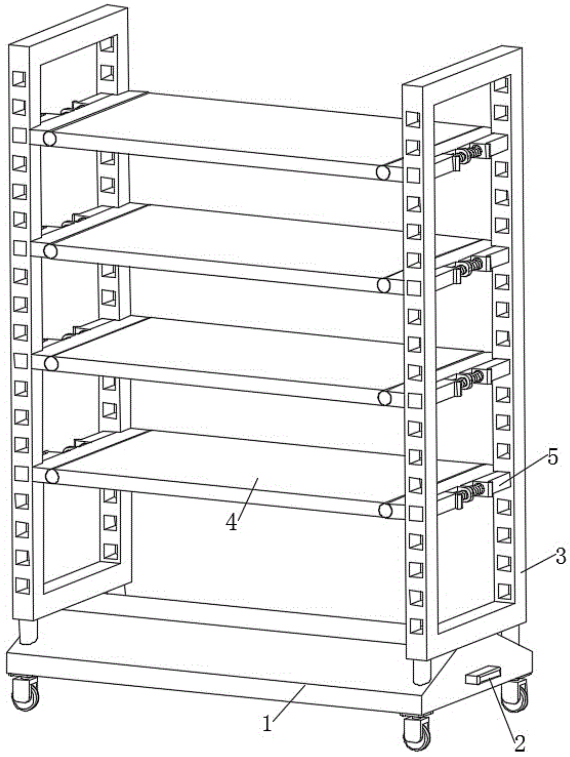

21: 2023/02979. 22: 2023/02/28. 43: 2023/05/08
51: F01N
71: Taiyuan University of Technology
72: Qiaoyan LI
54: A SCR CATALYST AND ITS PREPARATION METHOD
00: -
The invention belongs to the field of catalyst preparation technology, and discloses a SCR catalyst and its preparation method. The SCR catalyst uses CeFePr composite metal MOF as the precursor of active component, and the titanium nanotubes after degassing treatment under inert atmosphere as the carrier. The SCR catalyst is CeFeaPrbOx@TNT core-shell catalyst. The composite metal MOF is used as the active component, and the degassed titanium nanotube is used as the carrier. The strong interaction between the composite active components derived from the MOF structure, the structural defects on the surface of TNT and the high dispersion of the active components make the Ce-based catalyst of the

invention show high low-temperature denitration efficiency and sulfur resistance, which improves the application of the Ce-based catalyst in the field of low-temperature denitration.

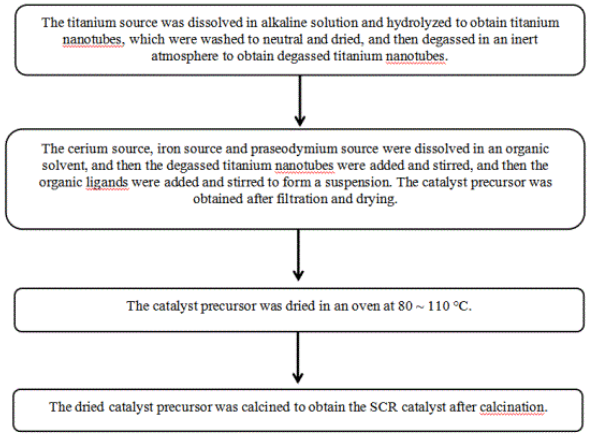

21: 2023/02980. 22: 2023/02/28. 43: 2023/05/08
51: G09B
71: HEBEI CHEMICAL AND PHARMACEUTICAL COLLEGE
72: Mina HE
54: GENERAL AUXILIARY TEACHING AID FOR TEACHING
00: -
The present invention relates to the technical field of teaching aids, in particular to a general auxiliary teaching aid for teaching. The teaching aid includes a base plate, wherein an upper surface of the base plate is fixedly connected to a protective cylinder; the protective cylinder is slidably connected to a telescopic rod; the top of the telescopic rod is fixedly connected to a mounting plate; the center of an upper surface of the mounting plate is rotatably connected to a shaft lever; an upper end of the shaft lever is fixedly connected to an exhibition plate; and two symmetrically distributed positioning and clamping mechanisms are mounted on an upper surface of the exhibition plate. The teaching aid further includes a motor mounted on a lower surface of the mounting plate; and an output shaft of the motor extends to the above of the mounting plate, and is fixed to a driving gear. The present invention, by providing a movable, elevatable, and rotatable exhibition mechanism, can exhibit a sample and a model from multiple angles, facilitates the exhibition in a classroom and in an exhibition room, and solves the problem that the exhibition effects of the model and sample for teaching are poor at present stage due to the lack of an auxiliary apparatus.

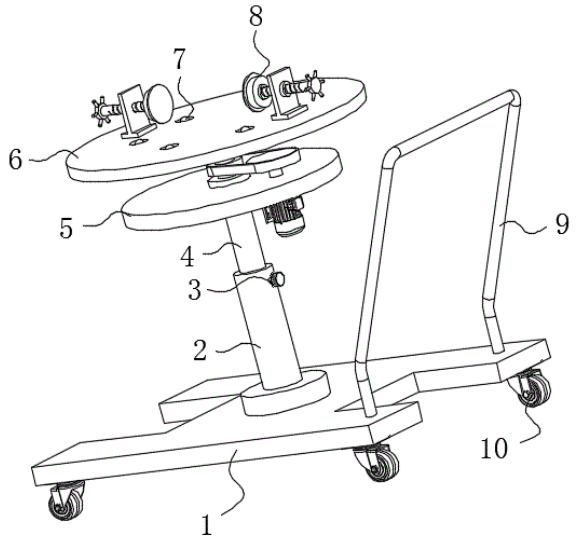

21: 2023/02981. 22: 2023/02/28. 43: 2023/05/08
51: G09B
71: HEBEI CHEMICAL AND PHARMACEUTICAL COLLEGE
72: Zhixian LI
54: APPARATUS FOR CLASSROOM TEACHING
00: -
The present invention relates to the technical field of classroom teaching tools, in particular to an apparatus for classroom teaching, including a light screen plate and a light source assembly, wherein an arc-shaped slide rail disposed on the light screen plate is slidably connected to the light source assembly; the light source assembly includes an arc-shaped slider slidably connected to the arc-shaped slide rail; a laser light source is placed in a fixing sleeve disposed on the arc-shaped slider; the light screen plate is rotatably connected a support frame; a fastening bolt is disposed at the rotatable connection between the support frame and the light screen plate; and a reflective mirror is placed on one side of the light screen plate. The present invention facilitates the stable adjustment of the position of the light source assembly on the light screen plate during use, such that an incident angle of experimental light can be quickly adjusted to satisfy requirements for different experiments. The apparatus is easy and simple to operate, thereby facilitating use. Furthermore, incident light and

reflected light can be viewed on the light screen plate. The incident angle and a reflection angle of the light can be intuitively observed by using the graduation lines on the light screen plate. The experimental result can be intuitively observed, thereby facilitating use.

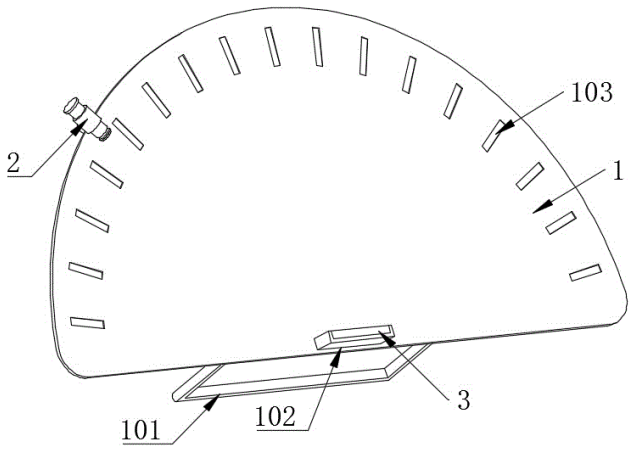

21: 2023/02982. 22: 2023/02/28. 43: 2023/05/08
51: B66B
71: Anhui Technical College Of Mechanical and Electrical Engineering
72: NI, Jinting, ZHAO, Jing, ZHANG, Guozheng, ZHAO, Lei

54: ELEVATOR DOOR FRAME FOR INTEGRATED DOOR MACHINE

00: -

Disclosed is an elevator door frame for an integrated door machine. The elevator door frame includes an elevator door frame, a connecting mechanism and a fixing mechanism, where the elevator door frame is provided on an external wall of an elevator door, the elevator door frame includes two foldable first transverse plates and two foldable second transverse plates, one side of each first transverse plate is provided with a first vertical plate, and one side of each second transverse plate far away from the first transverse plate is provided with a second vertical plate; and the connecting mechanism is provided outside an elevator lobby, and is located between the first transverse plates and the second transverse plates, and the fixing mechanism is provided between the first transverse plates and the second transverse plates.

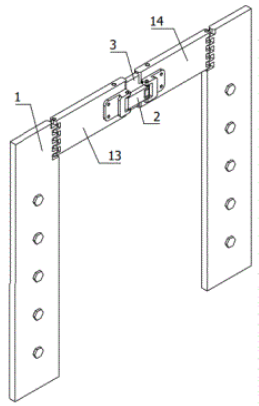

21: 2023/02983. 22: 2023/02/28. 43: 2023/05/09
51: G06Q
71: Shanxi Institute of Technology
72: Quanzhong LI, Hongyan LIANG, Penghong FAN, Haonan LI, Yurui WANG

54: A PULVERIZED COAL CONTENT MONITORING AND CONTROL SYSTEM AND ITS WORKING METHOD

00: -

The invention discloses a pulverized coal content monitoring and control system, including a extraction pump, a sewage tank, a pulverized coal content testing device, a pulverized coal content collection system, a control system and a pulverized coal content remote monitoring system set at the bottom of the coalbed methane shaft. The invention adopts the above pulverized coal content monitoring and control system and its working method, which can realize the monitoring and monitoring of pulverized coal content in the process of coalbed methane well drainage and production, reduce the number of pump inspections, and reduce the labor intensity of drainage and production personnel.

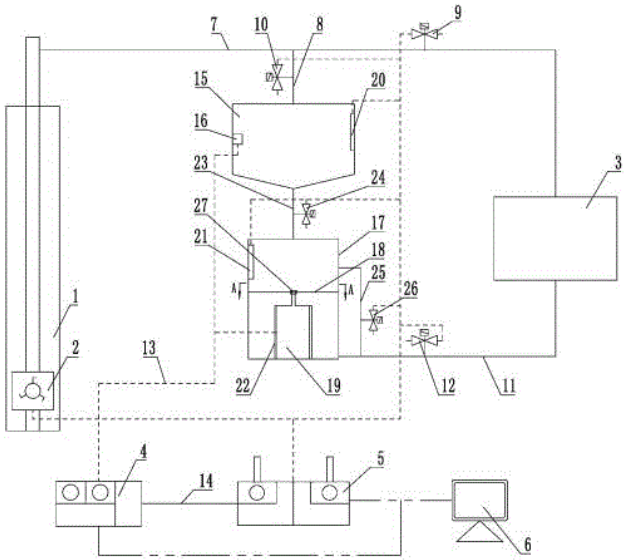

21: 2023/02984. 22: 2023/02/28. 43: 2023/05/09
51: G02B; G02F
71: Taiyuan University of Technology
72: Yuping LI, Ruonan LI, Huimin BIAN, Huijun HU, Peide HAN, Kai ZHANG

54: A METHOD FOR THE PREPARATION OF PHOTONIC CRYSTAL FILMS

00: -

The present invention relates to the technical field of optical thin films, more specifically, the present invention is a method for preparing photonic crystal thin films; photonic crystal thin films can be prepared using electrochemically assisted self-assembly deposition method, comprising the steps of: weighing water, ethanol, silicon source, surfactant, sodium nitrate, hydrochloric acid for pre-hydrolysis reaction, applying cathodic potential on the conductive substrate for electrochemically assisted self-assembly deposition for a certain time, removing The electrodes are immediately rinsed with water, dried at 130 degrees celcius and the mesoporous films are then roasted in air at 450 degrees celcius for a certain period of time to obtain photonic crystal films; the mesoporous pore size of the photonic crystal films of the present invention can be adjusted in the range of 2 nm-4 nm to obtain high reflectivity in the extreme UV band of 5-12 nm, and the preparation time is short, and the preparation thickness can be adjusted in the range of 20 nm-200 nm, which is flexible and variable. Simple operation, no special equipment and conditions required, low preparation costs.

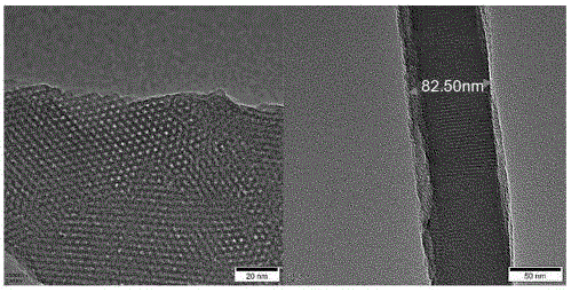

21: 2023/02988. 22: 2023/02/28. 43: 2023/05/09
51: B02C
71: Shanghai Maritime University
72: Xiwen CHEN

54: A NEW TYPE OF HIGH EFFICIENCY ORE CRUSHER

00: -

The invention discloses a new type of high-efficiency ore crusher, including a body, the upper side of the body is provided with a hopper at the left end, a first motor is provided at the top centre of the body, a second motor is provided on the external side wall of the body, the first motor is connected to a crushing device, the crushing device includes a crushing hammer head, the crushing hammer head is connected to the first motor through a rotating shaft, a grinding device is provided on the lower side of the crushing device on the upper side of the inside of the body. The high-efficiency ore crusher with vibration damping device of the present invention, through the crushing device and grinding device to deep crushing processing of ore, crushing effect is good, high efficiency, can make the dust in the ore separated out, reduce the workload of later ore cleaning, reduce the cost of ore processing, improve production efficiency, can be screened for the crushed ore, further improve the work efficiency, in addition can effectively damping, make The crusher works more smoothly and improves safety.

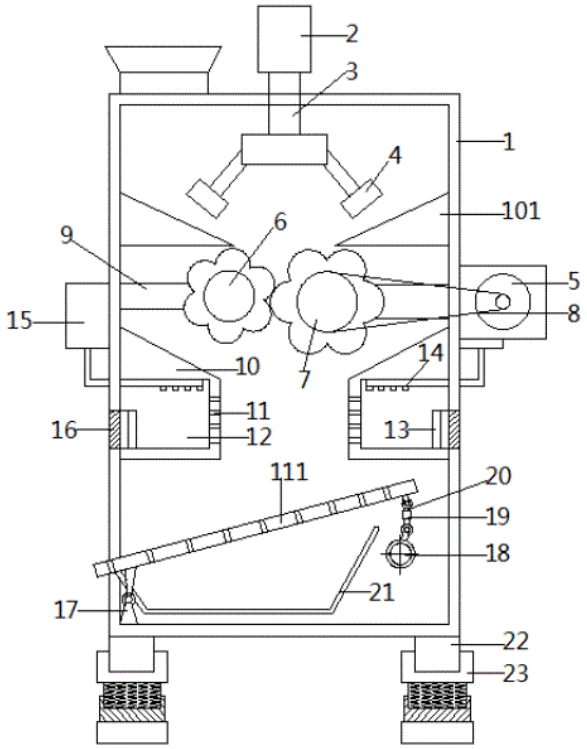

21: 2023/02989. 22: 2023/02/28. 43: 2023/05/09
51: A61H
71: Hebei University of Architecture
72: Chundong LIU, Donghui ZHANG, Zhanying WANG, Jianming LIANG, Zhanfeng SONG, Donghao WU, Xiaojun YAN, Xin LI, Yalei FAN, Weidong YAN
54: LOWER LIMB REHABILITATION TRAINER
00: -
The present invention discloses a lower limb rehabilitation trainer, including a rehabilitation table, a power device, a transmission device, an auxiliary movement device, the power device and the transmission device are located at the bottom of the rehabilitation table, the auxiliary movement device is provided with two groups and is located at the top of the rehabilitation table, the auxiliary movement device includes a leg support plate and a foot support plate, the leg support plate includes a thigh support plate and a calf support plate, the transmission device includes a rack one, a rack two and a gear. The present invention uses the above-mentioned lower limb rehabilitation trainer, which is low cost to use, provides power to drive the leg movement, has good practical performance and economic performance, and solves the situation that patients may use irregularities in the process of use.

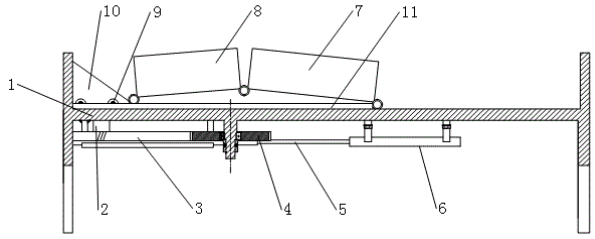

21: 2023/02990. 22: 2023/02/28. 43: 2023/05/09
51: G01N
71: Anhui University of Science and Technology
72: Gao Liangmin, Wei Feiyan, Chen Xiaoqing, Wu Huijun, Liu Shaomin, Cha Fugeng, Yu Xiaokun, Sun Rui, Gu Xin, Zhao Yiwei
54: A STEP BY STEP COLLECTING DEVICE FOR SURFACE RUNOFF
00: -
This invention provides a step by step collecting device for surface runoff, belonging to a sampling instrument, comprising partitions around a runoff plot, a screen at the top, a sediment collection tank at the back, a water outlet with a screen, a diversion hose, a stepped drainage tube, a flowmeter, an exhaust valve, a movable sealing cover, a scale connector, a ball valve and a runoff water collecting bottle. The runoff collecting bottle has three grades, and the runoff with different rainfall degrees can be collected by intercepting foreign bodies through the blocking net and the stepped drainage pipe respectively, and the movable sealing cover on the bottle is automatically opened and closed by its own gravity and water pressure; and solid-liquid separation and collection can be realized through the sediment collection tank; samplers are equipped with flow meters and scale connectors, so the internal runoff collection can be observed from the outside. When taking water, only the ball valve under the bottle needs to be opened, making it easy to operate.

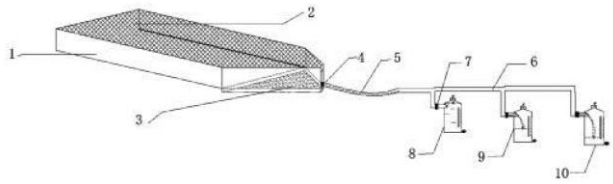

21: 2023/02991. 22: 2023/02/28. 43: 2023/05/09
51: A01G

71: Shanxi Agricultural University
72: Zhiwei FENG, Yingchao MENG, Yunan WANG, Zhenfeng GAO

54: A METHOD FOR THE USE OF THE AUXIN NAPHTHALENE ACETIC ACID TO IMPROVE CEREAL YIELD

00: -

The present invention discloses a method of using the auxin naphthalene acetic acid for improving grain yield, auxin naphthalene acetic acid contains surfactant, the content of surfactant is 1-2%, the application concentration of auxin naphthalene acetic acid is 18-144mg/L, the application time of auxin naphthalene acetic acid is the filling stage of plant growth, the optimal spraying concentration of auxin naphthalene acetic acid is 18-36mg/L, the present invention uses The above-mentioned method of using auxin naphthalene acetic acid for improving grain yield is more conducive to the dispersion of auxin by surfactant, and the concentration of 18-36 mg/L is controlled by spraying auxin naphthalene acetic acid evenly on the leaves.

Year	Variety	Treatment	Chl a	Chl b	Car	Total chl
2012	Zhangzagu 5	C0	3.86 ± 0.09b	1.17 ± 0.07a	0.64 ± 0.35c	5.15 ± 0.11bc
		C9	3.98 ± 0.11b	1.21 ± 0.06a	0.63 ± 0.37c	5.32 ± 0.12b
		C18	4.29 ± 0.19a	1.27 ± 0.09a	0.81 ± 0.38ab	5.79 ± 0.20a
		C36	4.42 ± 0.13a	1.3 ± 0.09a	0.89 ± 0.40a	5.68 ± 0.03a
		C72	4.14 ± 0.14ab	1.25 ± 0.07a	0.74 ± 0.38bc	5.22 ± 0.15bc
		C144	3.97 ± 0.11b	1.13 ± 0.15a	0.66 ± 0.31c	5.06 ± 0.03c
	Jingu 21	C0	2.28 ± 0.17c	0.6 ± 0.07b	0.51 ± 0.2d	2.88 ± 0.12d
		C9	2.33 ± 0.18c	0.67 ± 0.01ab	0.53 ± 0.23cd	3.00 ± 0.20cd
		C18	2.62 ± 0.11ab	0.7 ± 0.01a	0.7 ± 0.28ab	3.32 ± 0.12ab
		C36	2.81 ± 0.05a	0.73 ± 0.01a	0.82 ± 0.32a	3.54 ± 0.05a
		C72	2.51 ± 0.11bc	0.69 ± 0.02a	0.66 ± 0.27bc	3.20 ± 0.11bc
		C144	2.31 ± 0.08c	0.7 ± 0.01a	0.54 ± 0.24cd	3.01 ± 0.09cd
2013	Zhangzagu 5	C0	3.44 ± 0.08c	1.00 ± 0.10a	0.48 ± 0.29a	4.43 ± 0.22cd
		C9	3.62 ± 0.12a	1.06 ± 0.07a	0.55 ± 0.32a	4.68 ± 0.07abc
		C18	3.67 ± 0.02a	1.14 ± 0.11a	0.58 ± 0.33a	4.81 ± 0.16a
		C36	3.64 ± 0.06a	1.13 ± 0.07a	0.61 ± 0.34a	4.77 ± 0.01ab
		C72	3.46 ± 0.11b	1.05 ± 0.11a	0.55 ± 0.3a	4.50 ± 0.00bcd
		C144	3.41 ± 0.12b	0.97 ± 0.05a	0.47 ± 0.29a	4.38 ± 0.20d
	Jingu 21	C0	1.95 ± 0.1b	0.49 ± 0.04c	0.38 ± 0.16c	2.44 ± 0.17b
		C9	2.11 ± 0.11ab	0.53 ± 0.02bc	0.44 ± 0.18b	2.63 ± 0.16ab
		C18	2.24 ± 0.18a	0.61 ± 0.04ab	0.51 ± 0.21ab	2.84 ± 0.28a
		C36	2.19 ± 0.13ab	0.63 ± 0.02a	0.53 ± 0.22a	2.81 ± 0.18ab
		C72	2.09 ± 0.07ab	0.51 ± 0.05c	0.42 ± 0.16b	2.59 ± 0.15ab
		C144	1.99 ± 0.14ab	0.48 ± 0.06c	0.43 ± 0.16b	2.47 ± 0.24ab

21: 2023/02992. 22: 2023/02/28. 43: 2023/05/09
51: G01N
71: Tarim University
72: Yao GUAN, Yuqiang WANG, Debao FAN, Huiwen LI, Haifeng ZHAO, Xinghong HE

54: A SOIL INFILTRATION AND PERCOLATION MEASURING DEVICE

00: -

The present invention discloses a soil infiltration and seepage measurement device comprising a main body housing and a substrate provided below the main body housing. Both ends of the substrate are provided with a movement aid mechanism, and the infiltration mechanism is provided on the lower surface of the substrate. A moisture measurement mechanism is provided at each end of the infiltration mechanism. A water storage tank is provided inside the main housing and a top window is provided on the upper surface of the main housing. A mixing mechanism is provided at the upper left corner of the front end of the main housing, and a control box is provided at one side of the mixing mechanism. The above-mentioned structure of a soil infiltration and percolation measuring device is used in the present invention, and the mobile auxiliary mechanism makes it easier to move. The mixing mechanism does not affect the purity of the main body of water; the moisture measurement mechanism is better adapted to different levels of ground and allows the probe to function better, which, together with the fixation of the combination frame, makes the overall use more effective.

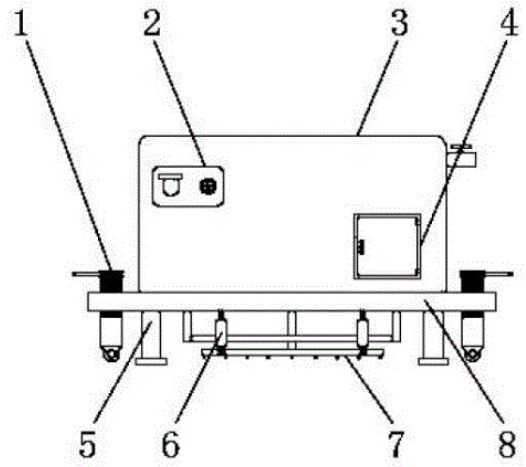

21: 2023/02993. 22: 2023/02/28. 43: 2023/05/09
51: C02F
71: Song Ting
72: Song Ting, Song Muyao, Song Muyan

54: SEPARATION EQUIPMENT FOR CONDENSATE POLISHING

00: -

Separation equipment for condensate polishing, comprises a housing; the inner wall of the housing is connected with an inclined first mesh plate, the right side of the first mesh plate is higher than the left side, the right side wall of the housing is connected with an inclined second mesh plate, the inner wall of the lower part of the housing is provided with a heating plate, the right side wall of the housing is connected with a stirring mechanism on the lower

side of the first mesh plate, the upper part of the left outer wall of the housing is connected with a fan, the air outlet of the fan passes through the left side wall of the housing and is connected with a diffuser, the upper side wall of the housing has a side penetration connected to manholes, the middle part of the upper side wall of the housing is connected with a water inlet pipe, and the middle part of the lower side wall of the housing is connected with a drain pipe. Compared with the prior art, the advantages of the invention are: add aeration facilities to the housing, introduce the air into the housing through the fan and diffuser, control the air, control the temperature of the condensate by the heating plate, and keep the manhole open always, the ammonia substances with low solubility are volatilized during heat dissipation through air convection.

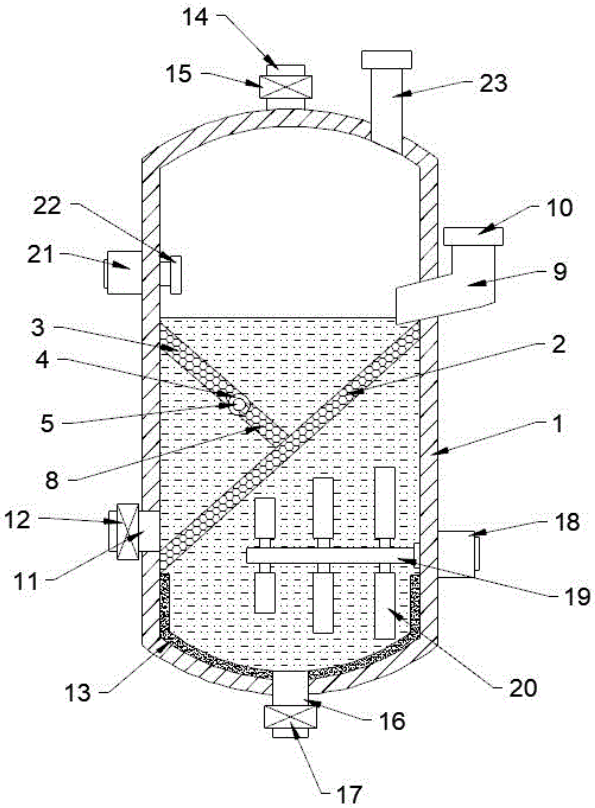

21: 2023/02994. 22: 2023/02/28. 43: 2023/05/09
51: G01B
71: Liaoning Provincial Institute of Agricultural Mechanization
72: AN, Hefeng, ZHANG, Xu, NIE, Ying, DONG, Xianghui, WANG, Fuyi, BAN, Chunhua, SUN, Jidong, BAN, Jingyang

54: ON-LINE OPERATION DEPTH MONITORING SYSTEM FOR AGRICULTURAL MACHINERY
00: -
Disclosed is a high-accuracy operation posture monitoring system for agricultural machinery. A tractor is started and moved to the level hard solid ground, an operation machine behind the tractor is lifted, the wheel track and the wheel base of the tractor as well as the actual width of the operation machine and other data are measured, a host of the high-accuracy operation posture monitoring system for agricultural machinery is started, and the measured data is correspondingly inputted in a setting interface to complete the pre-operation setting; the emission set and the reception set start to collect the operation depth, posture and other data of the operation machine by means of reception and emission distance measurement, and transmit the data to the host; and the host systematically collates the data and then transmits the data to the system platform terminal, and then integrates and optimizes to form final operation data.

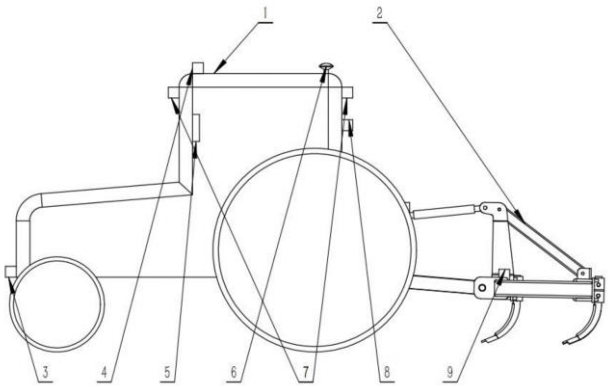

21: 2023/02995. 22: 2023/02/28. 43: 2023/05/10
51: E04H
71: Changzhou Fly Import and Export Trading Co., Ltd.
72: BAO Wenzheng, BAO Haoyu, LIANG Chunyan
54: NOVEL WARNING SAFETY NET
00: -
The invention discloses a novel warning safety net, which comprises two support rods, wherein warning lights are fixedly installed at the top ends of the support rods; a moving assembly is arranged at the bottom ends of the support rods; the side wall of any support rod is fixedly connected with a first support plate and a second support plate which correspond to each other up and down; a winding rod is

rotatably connected between the first support plate and the second support plate; the top end of the winding rod penetrates through the first support plate and is movably connected with a limiting assembly which is detachably connected with the top surface of the first support plate; the opposite side walls of the winding rod and the other support rod are respectively fixedly connected with fixing plates, and an intercepting mechanism is detachably connected between the two fixing plates, and the intercepting mechanism is composed of a plurality of detachably connected safety net assemblies. The device is convenient to move integrally, and at the same time, a plurality of safety net assemblies can be unfolded to a required length according to the partition length, and a single safety net assembly can be quickly replaced after being damaged.

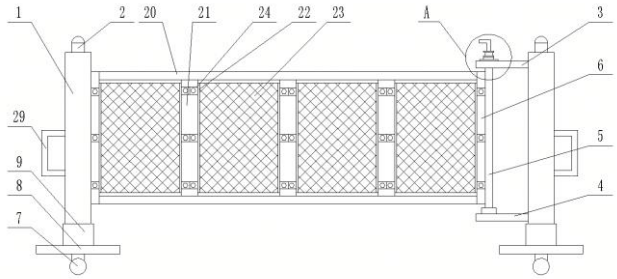

21: 2023/02997. 22: 2023/02/28. 43: 2023/05/10
51: G01F
71: Hunan Polytechnic of Water Resources and Electric Power
72: Liu Lihuan, Zhang Jie, Huang Xin, Chen Jie, Chen Hongyu, Geng Shenghui, Wang Jing, Zhan Jing, Zou Ying, Li Jiajun

54: NOVEL CHANNEL WATER MEASURING FACILITY

00: -

A novel channel water measuring facility. The novel channel water measuring facility. The supporting plate (1) is supported on the channel wall (2) of the channel, and the supporting plate (1) is provided with a group of fixed shaft through holes (3); and the group of fixed shaft through holes (3) are provided with a fixed shaft I (4), a fixed shaft II (5) and a fixed shaft III (6), the fixed shaft I (4) is connected with a blade I (7), and the fixed shaft II (5) is connected with a blade II (8), the areas and heights of the blade I (7) and the blade II (8) are equal, and the blade I (7) and the blade II (8) are transversely arranged in parallel; the root of the blade I (7) is connected with the bottom end of the shifting lever (9), the top end of the driving lever (9) is connected with a rotating disc (10), the rotating disc (10) is connected with the top end of the fixed shaft I (4), and the rotating disc (10) is meshed with a cross rotating concave wheel (11); the cross rotating concave wheel (11) is connected to the fixed shaft III (6), and the cross rotating concave wheel (11) is connected with a separation blade (12), and the separation blade (12) is used in cooperation with a probe (14) of the infrared counter (13). The patent of the invention is used for measuring water in channels.

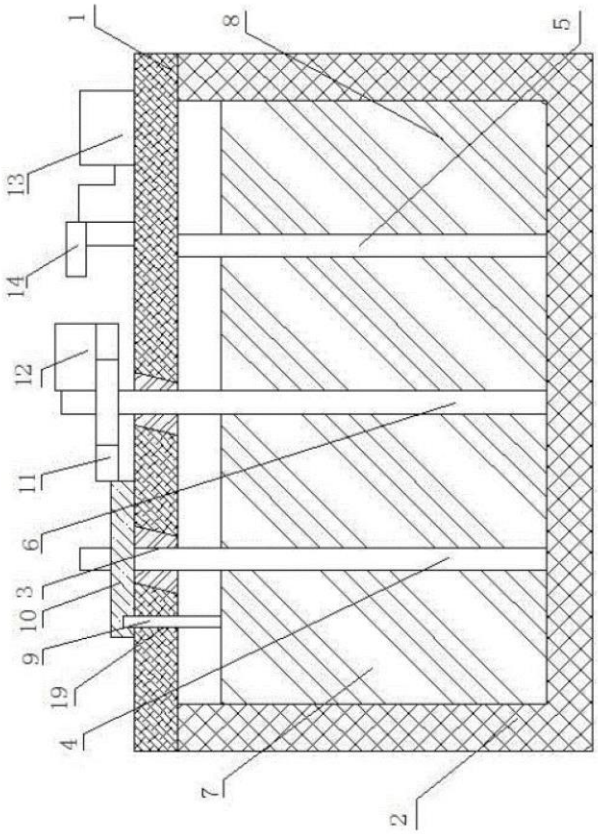

21: 2023/02998. 22: 2023/02/28. 43: 2023/05/10
51: C01F
71: Institute of Process Engineering, Chinese Academy of Sciences
72: Li Zhanbing, Li Shaopeng, Li Huiquan, Liu Qingqing, Huang Xingzhong, Sun Zhenhua

54: METHOD FOR PREPARING POLYALUMINUM CHLORIDE BY USING ALUMINUM DROSS

00: -

This invention provides a method for preparing polyaluminum chloride by using aluminum dross,

comprising the following steps: (1) drying sieving aluminum dross to obtain first coarse particles and first fine particles; (2) sequentially carrying out ultrasonic washing, wet screening and solid-liquid separation on the first coarse particles obtained in step (1) to obtain second coarse particles and slag; (3) mixing the first fine particles obtained in the step (1) and the slag obtained in the step (2), and sequentially carrying out hydrolysis and acidolysis to obtain acidolysis filtrate and acidolysis slag; (4) mixing the second coarse particles obtained in step (2) with the acidolysis filtrate obtained in step (3), and obtaining polyaluminum chloride after polymerization. The method provided by the invention realizes the harmless treatment of the aluminum dross, fully utilizes the aluminum resources in the aluminum dross, and does not need to additionally add industrial raw materials as regulators, thus reducing the production cost and the difficulty of industrial operation.

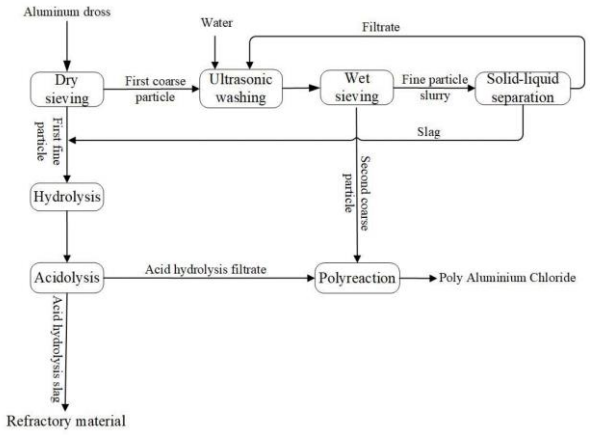

21: 2023/02999. 22: 2023/02/28. 43: 2023/05/12
51: G01N; G06T
71: XI'AN AERONAUTICAL INSTITUTE
72: HU, Qiuxia, TIAN, Jie, YAN, Li
54: PARTIAL OCCLUSION PLANT DISEASE IMAGE RECOGNITION ALGORITHM BASED ON PYTORCH
00: -
Disclosed is a partial occlusion plant disease image recognition algorithm based on PyTorch including the steps: data set construction: using various plant disease data sets which are in a VOC data set format, wherein the plant disease image recognition algorithm is based on a PyTorch framework, and uses a convolutional neural network for training and two methods for network training. The first method (supervised) is to remove images without diseases in each data set and then conduct training to generate a new weight. The second method (semi-supervised) is to remove leaf frames without plant diseases when labelling is used for labelling and then conduct training to generate a new weight. Disease partial occlusion recognition testing and comparison are conducted on this basis, so that the precision and the speed of detecting plant diseases are increased; the number of the varieties of disease samples contained in each data set is increased.

21: 2023/03000. 22: 2023/02/28. 43: 2023/05/17
51: G01V
71: ZHEJIANG GUANGCHUAN ENGINEERING CONSULTING CO.,LTD., ZHEJIANG INSTITUTE OF HYDRAULICS & ESTUARY（ZHEJIANG INSTITUTE OF MARINE PLANNING AND DESIGN
72: XU, Hu, QIU, Jian, JIANG, Xiaoyi, HU, Xiaoming, XIONG, Zhifu, TAN, Lei, JIANG, Shuhai, LIANG, Donghui, LIU, Fuda,YU, Jiongqi,
54: TRANSIENT ELECTROMAGNETIC EXPLORATION SYSTEM AND METHOD WITH TUNNEL TRANSMITTING AND AERIAL RECEIVING
00: -
The present invention belongs to the technical field of tunnel exploration and detection, in particular relates to a transient electromagnetic exploration system and method with tunnel transmitting and aerial receiving. The present invention comprises a tunnel signal transmitting system, a ground-to-air signal acquisition system and a data imaging interpretation system. The present invention has higher construction efficiency, simpler operation and more accurate determination on the depth of electrical anomaly area, can provide more

comprehensive and richer transient electromagnetic data for the whole stage of tunnel construction and maintenance, meets requirements of safe production, realizes efficient, convenient and easily operable ground data acquisition, and has characteristics of high density and comprehensiveness, can adapt to deserts, swamps, high-altitude mountainous areas and other areas with complex geological terrain and difficulty to work, improves the quality of collected data, and improves the efficiency of geophysical exploration.

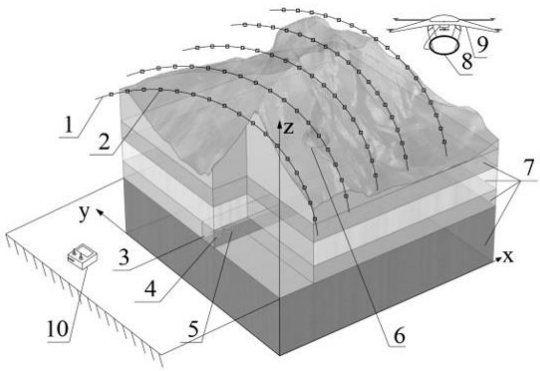

21: 2023/03001. 22: 2023/02/28. 43: 2023/05/17
51: G01N; G06T
71: INSTITUTE OF FOREST RESOURCE INFORMATION TECHNIQUES,CHINESE ACADEMY OF FORESTRY
72: WANG, Xiaohui, FENG, Linyan, LI, Shiming, TAN, Bingxiang

54: REMOTE SENSING DETECTION METHOD FOR FOREST RESOURCE CHANGE

00: -

Disclosed is a remote sensing detection method for forest resource change, comprising: collecting pre and post temporal remote sensing images (“PPTRSImages”) of a forest area, and removing the difference of spectral measured values between the PPTRSImages, to obtain overlapping areas of the PPTRSImages as the PPTRSImages of a study area; conducting image segmentation on the PPTRSImages to obtain multiple homogeneous image tuples corresponding to the PPTRSImages respectively - a plurality of image objects; based on partial least squares (PLS), regarding the image objects corresponding to the PPTRSImages as two groups of random variables; making a pre image band correspond to an independent variable, and a post image band correspond to a dependent variable; extracting components of a regression model that meet prediction requirements; constructing difference images by a component difference method; classifying the difference images by an SVM algorithm and extracting change areas.

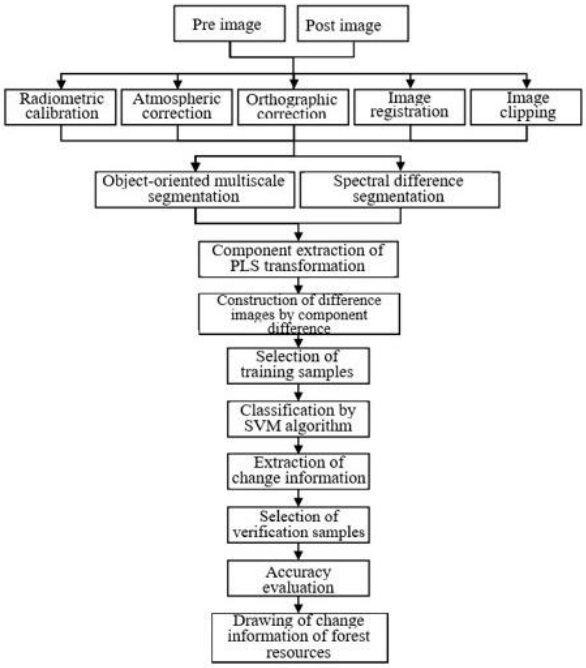

21: 2023/03002. 22: 2023/02/28. 43: 2023/05/08
51: E01F
71: Harbin Institute of Technology
72: Long WANG

54: A METHOD OF USING WASTE RUBBER TYRES TO MAKE HIGHWAY RIGID AND FLEXIBLE COMPOSITE CRASH BARRIERS

00: -

The present invention discloses a method for making a highway rigid-flexible composite crash barrier using scrap rubber tyres, comprising the following steps: S1. selecte the corresponding special hub according to the size of the scrap tyres; S2. snapping the scrap tyres into the special hub, or if scrap tyres are used, using tyre loading and unloading machinery to load the tyres into the scrap hub; S3. at the edge of the roadbed, driving in steel circular posts according to the spacing requirements; S4. Install the lower inner and outer crossbeams and connect them to the posts with bolts; S5. sleeve a structural unit on the posts and the structural unit is set on the double crossbeam; S6. repeat steps S4-S5 until the installation of the upper structural unit is

completed; S7. carry out the installation of the next structural unit in sequence and install the ends until this section of guardrail is installed. The invention uses the above-mentioned a use of waste rubber tyres to produce highway rigid and flexible composite anti-collision guardrail method, guardrail production is simple, easy to recover after the collision, effectively reduce the injury to the driver and passenger in the accident vehicle.

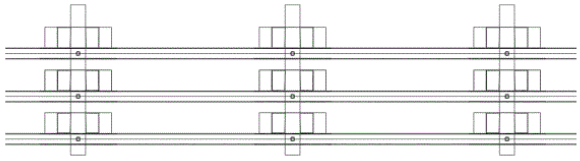

21: 2023/03003. 22: 2023/02/28. 43: 2023/05/08
51: G01N
71: Taiyuan University of Technology
72: Xiaogang WU, Songyuan WANG, Hao ZHONG, Yuan GUO, Meizhen ZHANG, Xiaobin WANG, Quanyou ZHANG, Hongmei GUO, Yanqin WANG, Zhipeng GAO, Yongwang ZHAO, Kai ZHANG, Pengcui LI, Yingze QIN, Xiaochun WEI, Weiyi CHEN
54: A MULTI-DIMENSIONAL TENSION AND COMPRESSION TEST DEVICE
00: -
The invention discloses a multi-dimensional tension and compression test device, including one-dimensional mechanism, two-dimensional mechanism and three-dimensional mechanism; The one-dimensional mechanism comprises a one-dimensional compression structure and a one-dimensional tension structure; The two-dimensional mechanism comprises a two-dimensional compression structure, a two-dimensional tension structure and one tension-compression structure; The three-dimensional mechanism comprises two tension and one compression structure, two compression and one tension structure, a three-dimensional compression structure and a three-dimensional tension structure. The invention adopts the above multi-dimensional tension and compression test device, which can load and test the degradation material in different stress states, obtain the mechanical parameters, stress and displacement field change rules of the test material under different degradation time, and can also apply multi-dimensional stress to other materials to carry out various tests.

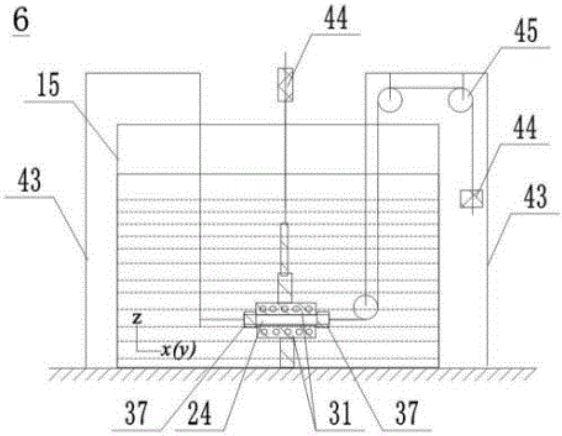

21: 2023/03004. 22: 2023/02/28. 43: 2023/05/10
51: A01G
71: XIAMEN R&B BAICHENG CONSTRUCTION AND INVESTMENT CO., LTD., FUJIAN YIJING ECOLOGICAL CONSTRUCTION GROUP CO., LTD., FUJIAN AGRICULTURE AND FORESTRY UNIVERSITY
72: Yumei WU, Daicheng YE, Xuebin WANG, Zhiteng CHEN, Lijin GUO, Wei LIN, Siren LAN, Bizhu HE, Jie SHI, Yu LI, Qi YE, Yifei JIAN, Jincheng LIANG, Jiehui HUANG
54: METHOD FOR EX VITRO PROPAGATION OF BOUGAINVILLEA AND GRAFTING OF POLYCHROMATIC SERIES OF MICRO-BUDS
00: -
Disclosed is a method for offshoot propagation and multicolor bract micrografting of bougainvillea, which belongs to the field of ornamental plant propagation technology. The offshoot propagation method of bougainvillea includes disinfecting the seeds extracted from the bougainvillea fruit, inducing and cultivating the obtained buds, and then propagating the stem segments of the induced buds. This method solves the problem of low seed germination rate and difficulty in propagation of bougainvillea under natural conditions. The multicolor bract micrografting method involves obtaining sterile rootstock seedlings of bougainvillea by inducing and cultivating the seedlings of bougainvillea rootstock varieties, grafting the obtained effective seedlings onto the sterile rootstock seedlings using a grafting needle, obtaining a stable micrografting after vigorous growth and rooting, acclimatizing and planting the micrografting in the experimental field after hardening at room temperature. This method

greatly improves the survival rate of multicolor grafting of bougainvillea, facilitates propagation.

21: 2023/03005. 22: 2023/02/28. 43: 2023/05/08
51: A61K
71: Institute of Chinese Materia Medica
72: Cun ZHANG, Yun WANG, Zhe JIA, Yuzhen ZHANG, Pengle CHENG
54: A METHOD FOR MONITORING THE PROCESS OF STIR-FRYING CHINESE HERBAL MEDICINES
00: -
The present invention discloses a method for monitoring the process of stir-frying Chinese herbal medicines, and proposes a method for monitoring the process of stir-frying Chinese herbal medicines for the problem that the existing methods cannot complete real-time monitoring of the process of concocting Chinese herbal medicines. The specific process of the method is as follows: firstly, the images of Chinese herbal medicines are acquired in real time, and the regions of Chinese herbal medicines in the images are extracted, and then the inner surface regions are removed to obtain the segmented images of Chinese herbal medicines, and then the gray mean and standard deviation of each single channel image of HSV and Lab are extracted from the segmented regions of Chinese herbal medicines to obtain the feature vector describing the color information of Chinese herbal medicines, and the feature vector is subjected to principal component analysis, and then the The first 5 principal components obtained are used as the model input data model, and the fried coke state data are used as the model output. The method improves the existing machine vision analysis method and realizes the real-time monitoring of the process of Chinese herbal medicine concoction.

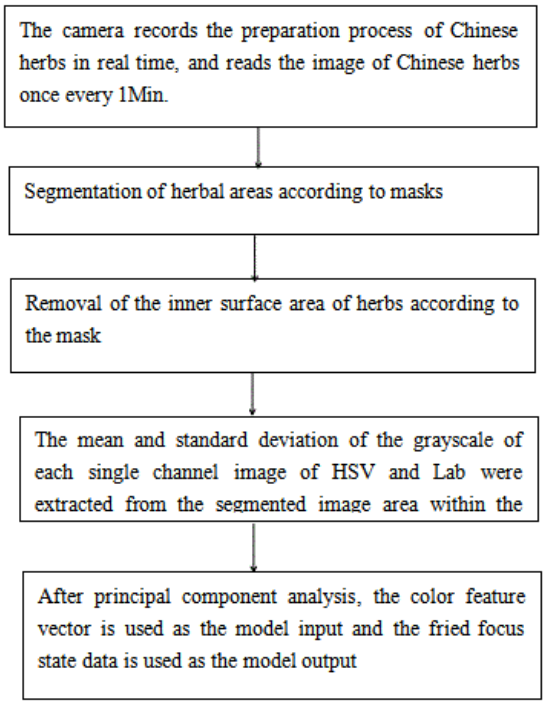

21: 2023/03006. 22: 2023/02/28. 43: 2023/05/09
51: G06Q
71: Shanxi Institute of Technology
72: Penghong FAN, Hongyan LIANG, Quanzhong LI, Haonan LI, Yurui WANG
54: A MULTIFUNCTIONAL INTELLIGENT REMOTE CONTROL SYSTEM AND ITS CONTROL METHOD
00: -
The invention discloses a multifunctional intelligent remote control system and its control method, including coalbed methane well parameter monitoring equipment, data acquisition system, intelligent drainage and production control system and remote monitoring and control system; Parameters monitoring equipment of coalbed methane well mainly includes gas flowmeter, liquid flowmeter, downhole flow pressure sensor, casing pressure sensor, temperature sensor, liquid level testing device and frequency converter; The invention also discloses a remote control method of an intelligent remote control system for a coalbed methane well drainage and production device. The invention adopts the above multifunctional intelligent remote control system and its control method to realize the intelligent drainage and production of different types of coalbed methane wells; It realizes remote real-time monitoring and monitoring of CBM

well drainage and production, and remote users can view, query and save detailed real-time data and historical data remotely.

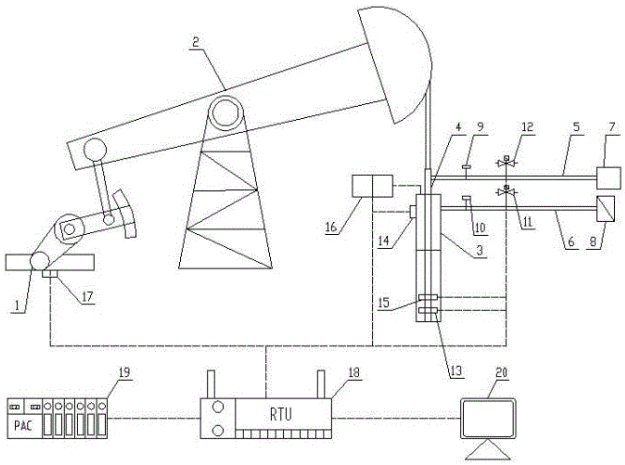

21: 2023/03007. 22: 2023/02/28. 43: 2023/05/09
51: C22C
71: Shenyang University of Technology
72: Guiqing ZHANG, Yunhai SU, Zhiyong DAI, Taisen YANG

54: A HIGH-ENTROPY ALLOY SURFACING LAYER WITH HIGH WEAR RESISTANCE AND ITS PREPARATION METHOD

00: -

This invention discloses a high-entropy alloy surfacing layer with high wear resistance and its method, including the following components: Al element of 4.46-8.90 portions, Cr element of 9.69-17.10 portions, Cu element of 11.20-20.85 portions, Fe element of 11.30-21.13 portions, Ni element of 11.23-19.39 portions, Mo element of 4.93-17.18 portions, Nb element of 6.10-19.10 portions, Ti element of 3.15-9.86 portions. The invention adopts the above-mentioned high-entropy alloy surfacing layer with high wear resistance and its method. The surfacing layer has high hardness and good wear resistance, which improves the shortcomings of a small volume of traditional high-entropy alloy preparation to a certain extent. Welding on the tool surface can prepare a large number of wear-resistant surfacing layers to meet the application of cutting tool materials.

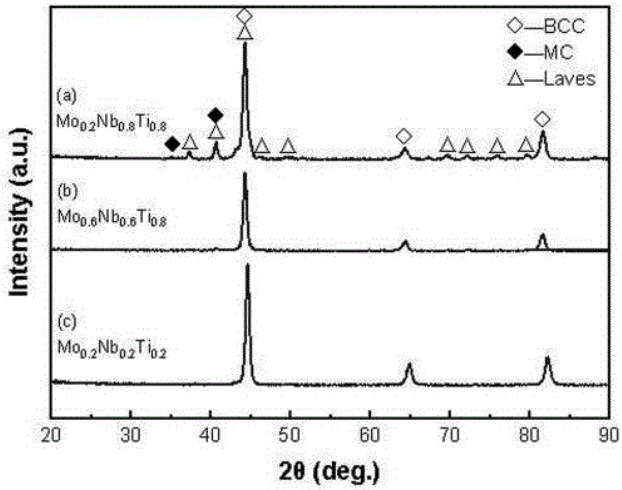

21: 2023/03008. 22: 2023/02/28. 43: 2023/05/09
51: C22C
71: Shenyang University of Technology
72: Guiqing ZHANG, Yunhai SU, Zhiyong DAI, Taisen YANG

54: AN ALCRCUFE2.5NITIX HIGH ENTROPY SURFACING ALLOY WITH HIGH PERFORMANCE AND ITS PREPARATION METHOD

00: -

This invention disclosed an AlCrCuFe2.5NiTix high entropy surfacing alloy with high performance and its preparation method, the AlCrCuFe2.5NiTix high entropy surfacing alloy includes the following mass components: Al element in 6.93-7.83 portions, Cr element in 13.34-14.90 portions, Cu element in 16.31-18.17 portions, Fe element in 35.94-39.60 portions, Ni element in 15.14-16.69 in portions, Ti element in 2.73-12.32 portions; the purity of the metal powder is 99.9%. The preparation method for the AlCrCuFe2.5NiTix high entropy surfacing alloy with high performance includes the following steps: S1, select the material and material ratio; S2, prepare the AlCrCuFe2.5NiTix high entropy flux-cored wire; S3, select the base metal and pretreatment; S4. Prepare the AlCrCuFe2.5NiTix high entropy surfacing alloy. The invention uses the above-mentioned AlCrCuFe2.5NiTix high entropy surfacing alloy with high performance and its preparation method to obtain alloys with high hardness, high wear resistance, high corrosion resistance, and other excellent properties and can achieve good metallurgical bonding.

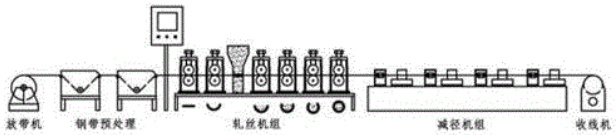

21: 2023/03009. 22: 2023/02/28. 43: 2023/05/09
51: C22C
71: Shenyang University of Technology
72: Guiqing ZHANG, Yunhai SU, Taisen YANG, Taisen YANG

54: A HIGH-TEMPERATURE CL-CORROSION-RESISTANT ALLOY CONTAINING NITROGEN AND LOW NICKEL, ITS RAW MATERIAL RATIO AND PREPARATION METHOD

00: -

This invention discloses a high-temperature Cl-corrosion-resistant alloy containing nitrogen and low nickel, its raw material ratio and preparation method. The raw material ratio is measured by mass percentage, including the following components: Ni, 42.0-46.0 wt%; Cr, 20.0-26.0wt%; Mn, 7.0-8.0wt %; Si, 1.6wt% and below; Mmo, 6.0-8.0wt%; Cu, 0.5wt% and below; Co, 0.8-1.0wt%; N, 0.12-0.21 wt%; Ti Al = 2.8-3.0wt%; Ti/Al=1.0-1.3; Nb, 6-7%; W, 2.0-3.0 wt%; V, 1.25-1.55 wt%; The rest are Fe and unavoidable impurities. The optimization of the alloy composition of the invention makes the alloy containing nitrogen and low nickel have excellent high-temperature resistance to Cl-corrosion at high temperatures, which can replace Inconel 625 alloy and be used in high-temperature and high-pressure chemical, energy, and marine engineering fields.

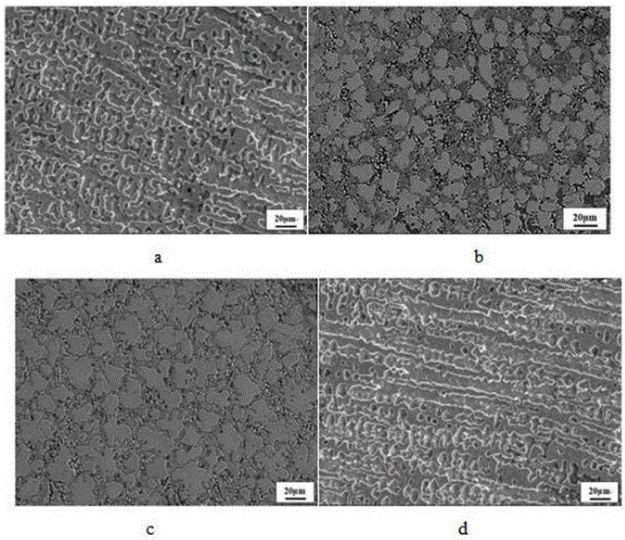

21: 2023/03010. 22: 2023/02/28. 43: 2023/05/09
51: G01N
71: Shenyang University of Technology
72: Guiqing ZHANG, Yunhai SU, Zhiyong DAI, Taisen YANG

54: A DEVICE FOR DETECTING THE STRENGTH OF RESISTANCE WELDED JOINTS AND ITS METHOD

00: -

This invention discloses a device for detecting the strength of resistance welded joints and its method is characterized in that the detecting method, includes the following steps: S1. The current transformer is used to collect the working current of the welder under test, the voltage transformer is used to collect the working voltage of the welder under test, the displacement sensor is used to collect the moving speed of the welder, the temperature sensor is used to collect the temperature of the welding rod, the humidity sensor is used to detect the environmental humidity, and the frequency sensor is used to detect the working frequency of the welder. S2. The six collected data are processed by the nonlinear simplex method to obtain the predicted strength of welded joints. S3. The final predicted strength of the welded joint is compared with the expected value. proposes a non-linear simplex method for the data processing model, which solves the uneven distribution of data distribution information and makes the information distribution more reasonable. It realizes the accurate prediction of the bonding strength of welded joints, improves the device in time, saves manpower and material resources, and reduces costs.

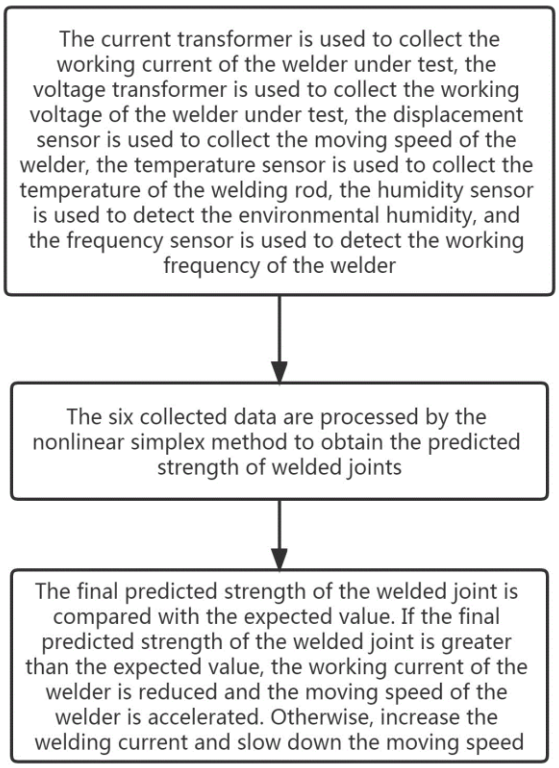

21: 2023/03011. 22: 2023/02/28. 43: 2023/05/09
51: C22C
71: Shenyang University of Technology
72: Hailong XUE, Kaiqing QI, Yufei ZHOU, Yunhai SU

54: A WEAR-RESISTANT SURFACING ALLOY CONTAINING SI, CR COMPOSITE CERAMIC PHASE AND ITS PREPARATION METHOD

00: -

This invention discloses a wear-resistant surfacing alloy containing Si, Cr composite ceramic phase and its preparation method, the composition of the alloy is: Cr10-20%, Si0.5-5%, Ni1-4%, C5-10%, the remaining amount is Fe and inevitable impurities. The preparation method is: the ferrochromium powder, molybdenum powder, nickel powder, graphite, and reduced iron powder calculated according to the mass percentage of the elements are mechanically mixed and uniformly mixed by dry ball milling method, and the particle size reaches 60-160 mesh. Drying the powder in the drying furnace for 1-2 h, and cooling the furnace to room temperature; the powder is added to the powder feeder, and then the plasma arc surfacing is carried out to form a wear-resistant surfacing layer. The invention adopts the above-mentioned wear-resistant surfacing alloy containing Si and Cr composite ceramic phase and its preparation method. The preparation method and operation method are simple, the added alloy type is small, the cost is low, and the obtained alloy surfacing layer hard phase has good bonding performance with the substrate, it is not easy to fall off and has the characteristics of high hardness, high wear resistance, and high-temperature oxidation resistance.

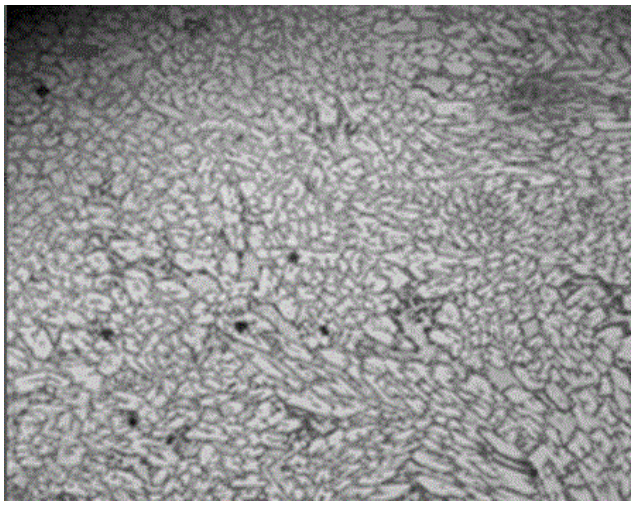

21: 2023/03012. 22: 2023/02/28. 43: 2023/05/09
51: B23K
71: Shenyang University of Technology
72: Hailong XUE, Zhangwei WU, Yang YANG, Yunhai SU

54: AN AUTOMATIC NAIL FEEDER FOR STUD WELDING MACHINE

00: -

This invention discloses an automatic nail feeder for stud welding machine, including a screening mechanism, a transition mechanism, a separation mechanism, a screw feeding mechanism, a transmission mechanism and a power mechanism. The screening mechanism is connected to the transition mechanism, the transition mechanism is connected to the separation mechanism, the separation mechanism is connected to the screw feeding mechanism, and the screening mechanism includes a screening cylinder, a screw feeding port, a screening blade, a screening baffle, a bearing, and a screening shaft. The screening baffle is fixed between the screening blades, and both ends of the screening shaft are connected to the screening

cylinder and the screw feeding port through the bearing. The invention adopts the automatic nail feeder of the stud welding machine, which is simple in structure and easy to operate. It can automatically change the sorting of the nail head from disorder to a certain order, and the direction of the nail head from non-unity to unity. It does not require manpower, covers a small area with strong practicability, and greatly improves the working efficiency of welding.

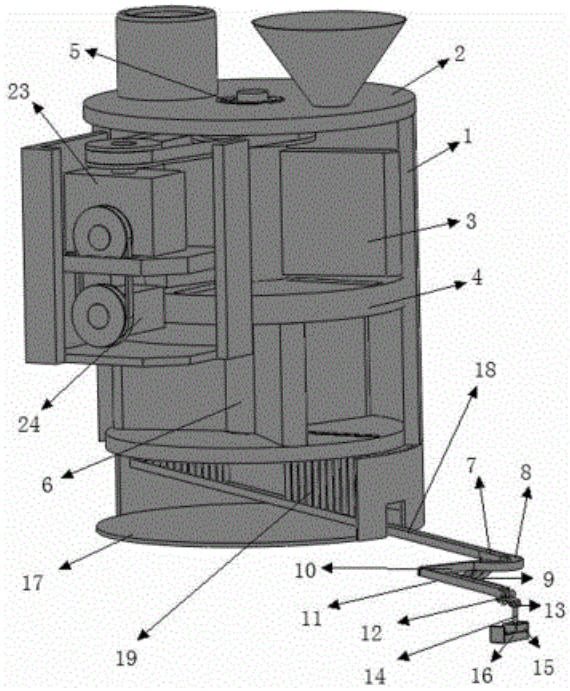

21: 2023/03013. 22: 2023/02/28. 43: 2023/05/09
51: B21D
71: Shenyang University of Technology
72: Wentao ZHENG, Yunlong HAN, Zhiyuan ZHANG, Yanqiang REN, Ming SU, Kai DU, Hongjun HUANG, Xiaoguang YUAN

54: AN OPTIMIZATION METHOD FOR THE FLUID PRESSURE FORMING PROCESS OF U-SHAPED METAL BELLOWS

00: -

This invention discloses an optimization method for the fluid pressure forming process of U-shaped metal bellows, including the following steps: S1. Set the mold working size and process parameters to design the initial value and the allowable adjustment range for the U-shaped bellows with a given size; S2, Use the finite element method, the simulation analysis of the bellows forming process is carried out by using the parameters in step S1. S3, Extract the key dimensions of the bellows in the simulation analysis results and compare them with the designed bellows structure dimensions; S4, Determine whether the key size of the bellows in the simulation analysis results is within the allowable error range; S5, if it is within the allowable error range, directly output the mold working size and process parameters, complete the optimization; S6, if it is not within the allowable error range, based on the comparison results to optimize the mold size and process parameters, back to S2. The invention adopts the above-mentioned U-shaped metal bellows fluid pressure forming process optimization method, which can make the bellows have the advantages of high dimensional accuracy, uniform groove spacing between the inner and outer sides of the bellows, small thinning at the crest, no subsequent shaping process, which can effectively improve the service life of the product and reduce the R & D production cost.

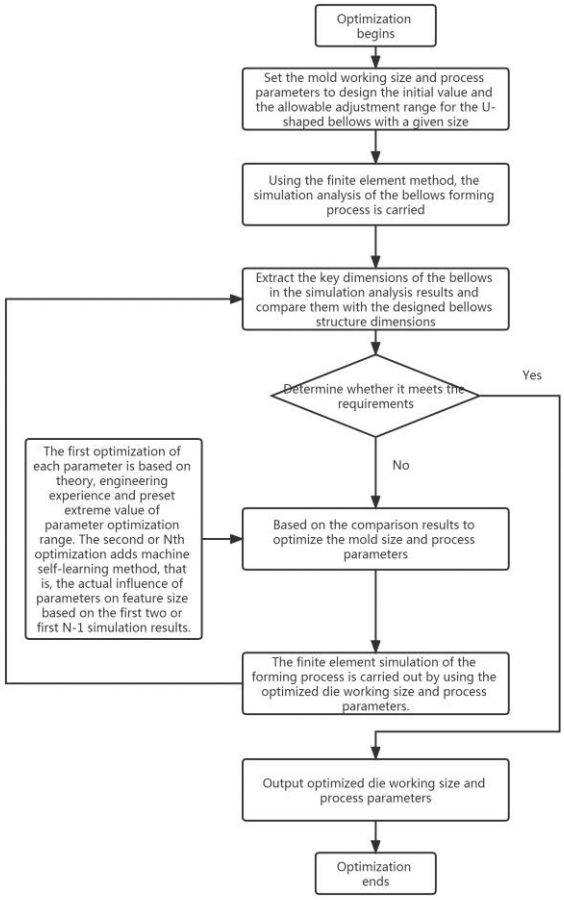

21: 2023/03014. 22: 2023/02/28. 43: 2023/05/09
51: F16L
71: Shenyang University of Technology
72: Wentao ZHENG, Zhiyuan ZHANG, Yunlong HAN, Yanqiang REN, Ming SU, Kai DU, Hongjun HUANG, Xiaoguang YUAN

54: A MULTI-STEP FLUID PRESSURE FORMING DEVICE FOR METAL BELLOWS AND ITS METHOD

00: -

This invention discloses a multi-step fluid pressure forming device for metal bellows and its method, including a moving die seat plate and a fixed die seat plate. There is a connecting column and a connecting frame between the fixed die seat plate and the moving die seat plate. The moving die seat plate is equipped with a pressure die driving device, and an active pressure die is arranged in the middle of the side near the fixed die seat plate. The active pressure die is connected to the telescopic end of the pressure die driving device. The invention adopts the above-mentioned multi-step fluid pressure forming device for metal bellows and its method to provide a uniformity that can adjust the wall thickness distribution of the bellows after forming, it can effectively improve the phenomenon of obvious thinning at the crest during the conventional forming process, and significantly improve the performance of the metal bellows.

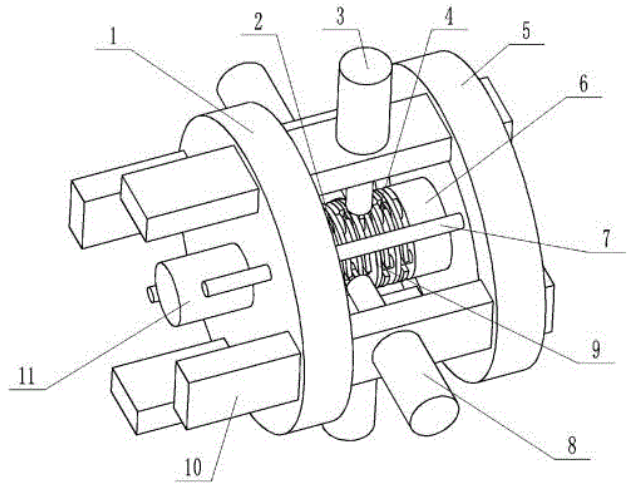

21: 2023/03015. 22: 2023/02/28. 43: 2023/05/10
51: B63B
71: Zhejiang International Maritime College
72: LI, Yun, XU, Dongfang, JIANG, Ping, LIU, Zailiang

54: METHOD FOR MOUNTING SHIP-MOUNTED TELESCOPIC AZIMUTH THRUSTER

00: -

Disclosed is a method for mounting a ship-mounted telescopic azimuth thruster. The method includes the following steps: step 1, manufacturing an azimuth thruster base; step 2, performing stay wire positioning before welding; step 3, welding and fixing the web and the cylindrical shell of the azimuth thruster base; step 4, machining and leveling the panel of the azimuth thruster base, and machining a sealing groove; step 5, mounting the azimuth thruster on the azimuth thruster base; step 6, correctly positioning the lower ends of the azimuth thruster cylinders, and vertically centering; step 7, lifting a power unit through a hydraulic cylinder and a lifting pump of the azimuth thruster, and vertically centering the lift cylinders through the lifting process; and step 8, welding the permanent connection between the lift cylinder and a guide rod and the hull. The present invention achieves higher mounting precision and higher mounting efficiency.

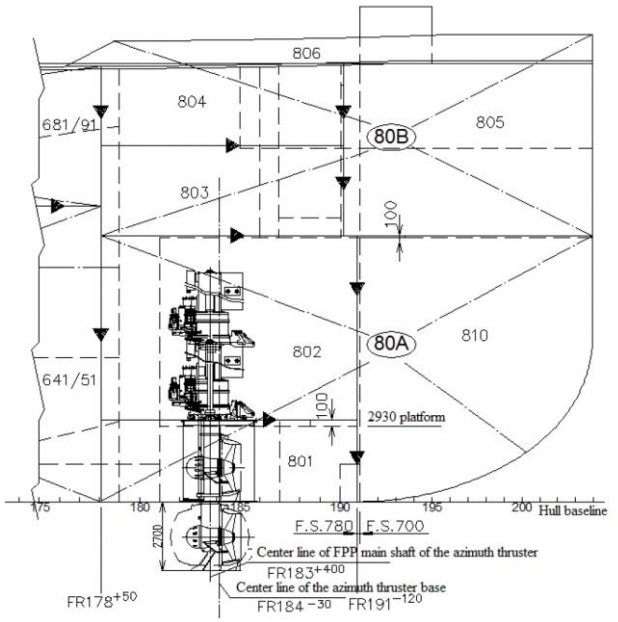

21: 2023/03019. 22: 2023/02/28. 43: 2023/05/10
51: A61L
71: Yunnan Centre for Disease Control
72: Shui Xiejun, Fu Xiaoqing, Huang Tian, Sheng Xiulian, Luo Xuelian
54: DISINFECTION AND CLEANING DEVICE FOR HAND-FOOT-AND-MOUTH DISEASE AND ITS USE METHOD
00: -
The invention discloses a disinfection and cleaning device for hand-foot-and-mouth disease and its use method. And it comprises a disinfection box body and two groups of box doors hinged at the front end of the disinfection box body, and a heating bin is arranged at one end of the top of the disinfection box body, and fans are arranged at both sides of the top end of the disinfection box body; The input end of the fan and the inner cavity of the heating bin are communicated with each other. According to the invention, the air in the inner cavity of the heating bin is heated by the electric heating wire, and then the hot air in the heating bin is extracted by the fan and sprayed out from the ejection opening; Therefore, the sterilized articles on the clothes rack and the placing tray can be dried, the surfaces of the sterilized articles are prevented from being too wet, and subsequent taking and use are not affected; Meanwhile, the sterilized articles can be slowly rotated in the inner cavity of the disinfection box body through the rotating rotating tray and the placing tray, so that the hot air ejected from the ejection opening can uniformly contact with articles, the dry efficiency is improved, and the practicability of the device is further improved.

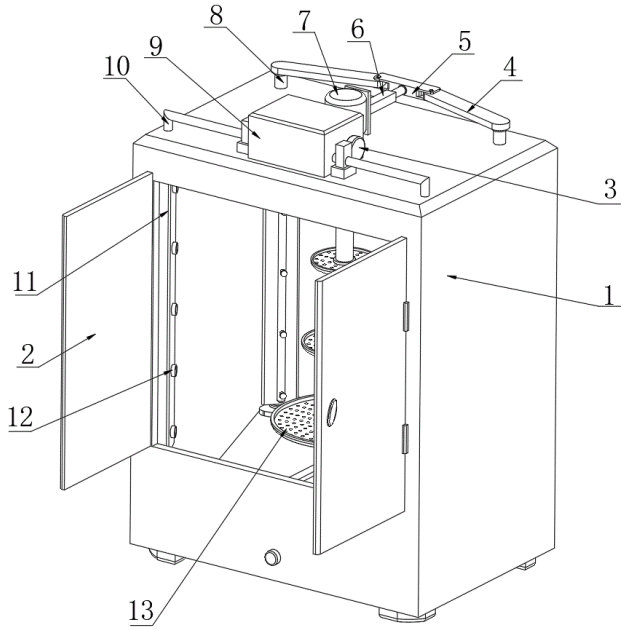

21: 2023/03020. 22: 2023/02/28. 43: 2023/05/17
51: B01J; C04B
71: NINGXIA ACADEMY OF METROLOGY & QUALITY INSPECTION
72: Jingqi ZHANG, Xingjun ZHANG, Yaqin XING, Jumei TIAN, Bin DUAN, Xiaodong HE, Jingjing ZHANG, Zhengguo ZHANG, Junfeng HOU, Jiang HE, Jie LIU, Xunzhe TAN, Di YANG
54: FLY ASH-BASED POROUS HIGH-FLUX TUBULAR REACTION DEVICE, AND PREPARATION METHOD AND APPLICATION THEREOF
00: -
Disclosed is a fly ash-based porous high-flux tubular reaction device, a preparation method and application thereof. The device comprises at least one tubular assembly comprising a base tube and a casing; the casing is sleeved outside the base tube with a reaction cavity formed therein between; a porous layer formed by sintering fly ash is arranged on the outer wall of the base tube. Superfine fly ash is sprayed on an outer surface of the base tube and sintered to form a porous layer. Because no pore-forming agent is added, the porous layer is mainly composed of microporous and mesoporous channels, for improving the heat transfer efficiency and facilitating a medium to react therein. The device is used for a pilot experiment of

disproportionation of toluene to xylene. Experimental results show that the toluene conversion rate reaches 53%-55%, the p-xylene selectivity reaches 29%-30.5%, and the product yield ratio reaches 0.82-0.83.

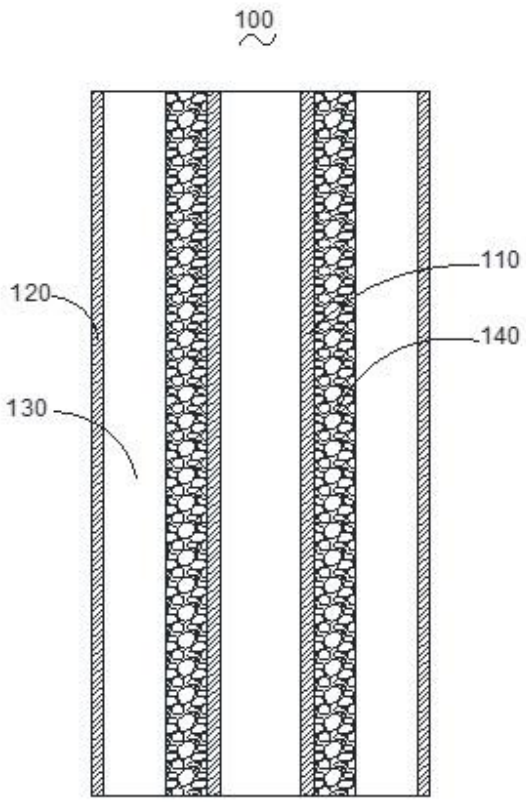

21: 2023/03023. 22: 2023/02/28. 43: 2023/05/09
51: B21C
71: FUZHOU UNIVERSITY
72: BAI, Hongbai, ZHENG, Xiaoyuan, LIU, Wang, REN, Zhiying, WU, Yiwan
33: CN 31: 202211505455X 32: 2022-11-29
54: APPARATUS FOR WINDING DOUBLE METAL WIRES INTO METAL RUBBER, AND WORKING METHOD THEREOF
00: -
Provided are an apparatus for winding double metal wires into metal rubber, and a working method thereof. The apparatus includes a base, where two sides of the base are provided with a chuck and a fastener respectively, a mandrel is clamped on the chuck, drawing mechanisms are symmetrically arranged on a left side and a right side of the mandrel, at least two pitch-adjusting rotary disc pairs are mounted on each drawing mechanism, and a wound metal wire is wound around the mandrel by means of the pitch-adjusting rotary disc pairs on the drawing mechanism on the same side. The present invention implements constant-pitch drawing of a spiral coil, such that the spiral coil can be stretched equidistantly, so as to solve disadvantages of traditional manual drawing of the metal rubber, improve consistency of the metal rubber, and greatly improve production efficiency.

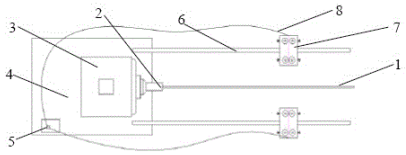

21: 2023/03024. 22: 2023/02/28. 43: 2023/05/09
51: B05D; B32B
71: FUZHOU UNIVERSITY
72: BAI, Hongbai, ZHENG, Xiaoyuan, LIANG, Jiasong, WU, Yiwan, REN, Zhiying
33: CN 31: 2022114919622 32: 2022-11-26
54: HIGH-DAMPING AND HIGH-RIGIDITY METAL RUBBER-POLYMER COMPOSITE MATERIAL
00: -
The present invention discloses a high-damping and high-rigidity metal rubber-polymer composite material, and belongs to the field of porous metal materials. By using a vacuum infiltration mode, two-component polymer and metal rubber are vulcanized to prepare the metal rubber-polymer composite material with characteristics of high damping performance and high rigidity. On the basis of maintaining the original porosity characteristic of the metal rubber, the damping performance of the prepared composite material is greatly improved by introducing the polymer. By introducing the polymer, the metal rubber with a porous structure forms a compact three-dimensional interpenetrating network structure, so that the rigidity of the composite material is improved greatly, and the stability of the metal rubber is also enhanced. The application field of the metal rubber can be expanded.

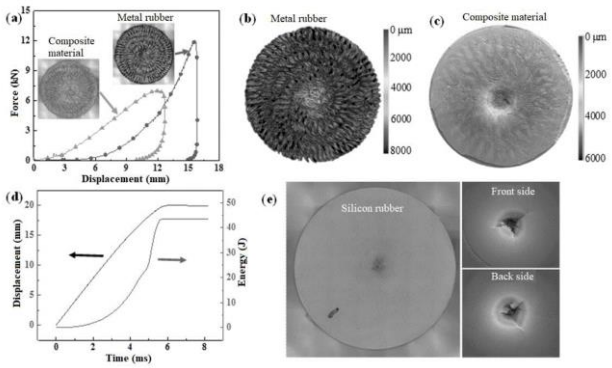

21: 2023/03025. 22: 2023/02/28. 43: 2023/05/09
51: C04B
71: Sanming University, Fujian Blueprints Supervision Consulting Co., Ltd., FUJIAN NO.1 CONSTRUCTION GROUP CO., LTD.
72: CUI, Xiuqin, DENG, Lianchun, ZHANG, Chuju, XIAO, Mingchao, WANG, Sihai, WEI, Sicheng, ZHANG, Huizhi, DENG, Yunsheng, XU, Xin, WEI, Shumin, MENG, Siyu, CAI, Yanling, WANG, Shengwei, LIAO, Zixuan
54: METHOD FOR PREPARING INSULATING BRICK
00: -
The present invention belongs to the technical field of waste recycling, and particularly relates to a method for preparing an insulating brick. The method provided by the present invention includes: mixing aluminum ash with a calcium carbide mud filtrate to react and subjecting the mixture to solid-liquid separation; mixing a first solid product obtained with an active agent to react; calcining a second solid product obtained; mixing calcium aluminate obtained with hydrochloric acid to react and subjecting the mixture to solid-liquid separation; and mixing a third solid product obtained with an aggregate, forming the mixture and steaming the mixture to obtain the insulating brick. The present invention realizes efficient comprehensive recycling of aluminum ash and calcium carbide mud with low cost while obtaining the insulating brick, thereby improving the economical and social benefits in comprehensive treatment of the aluminum ash and calcium carbide mud.

21: 2023/03026. 22: 2023/02/28. 43: 2023/05/09
51: B01J
71: Sanming University, Zhengzhou Municipal Engineering Management Office
72: CUI, Xiuqin, ZHANG, Haohua, DENG, Lianchun, ZHANG, Chuxing, LV, Shige, WEI, Sicheng, QIAO, Lei, LIU, Jifeng, ZHENG, Renliang, CHEN, Qiuping, LIU, Chu, SHI, Kailin, TU, Mengjie
54: METHOD FOR PREPARING WATER PURIFYING AGENT
00: -
The present invention belongs to the technical field of waste recycling, and particularly relates to a method for preparing a water purifying agent. The method provided by the present invention comprises: mixing aluminum ash with a calcium carbide mud filtrate to react and subjecting a first solid-liquid mixture obtained to solid-liquid separation; mixing a first solid product obtained with an active agent to react; calcining a second solid product obtained; mixing calcium aluminate obtained with hydrochloric acid to react and subjecting a second solid-liquid mixture obtained to solid-liquid separation; and drying a filtrate obtained to obtain the water purifying agent. The method provided by present invention realizes efficient comprehensive recycling of aluminum ash and calcium carbide mud with low cost while obtaining a water purifying agent product, thereby greatly improving the economical and social benefits in comprehensive treatment of the aluminum ash and calcium carbide mud.

21: 2023/03027. 22: 2023/02/28. 43: 2023/05/10
51: A01H; A01N; C12N; C12R; A01P
71: Gansu Agricultural University
72: ZHU, Yan, ZHU, Fupeng, CHEN, Fu, ZHAO, Yuanshou, ZHANG, Weibing, GONG, Wenjuan, ZHU, Jianning, LI, Yongcai, BI, Yang
54: AGROBACTERIUM RHIZOGENES STRAIN FOR ACCELERATING WOUND HEALING IN POSTHARVEST POTATO TUBERS
00: -
The present disclosure provides an Agrobacterium rhizogenes strain for accelerating wound healing in potato tubers, which is deposited at China General Microbiological Culture Collection Center (CGMCC) under accession number 24361. The A. rhizogenes strain provided by the present disclosure is isolated from a potato tuber wounds, and has the following advantages: the propagation is fast, the strain is easy to collect, the treatment of postharvest potato tubers is easy, the formation rate of wound periderm (namely secondary periderm, which is mainly composed of cell layers with suberin polyphenolic

(SPP), suberin polyaliphatic (SPA), and lignin) on wounded surface of potato tubers is accelerated, so that the weight loss speed of potato tubers and the expansion degree of disease spots infected by F. sambucinum are reduced.

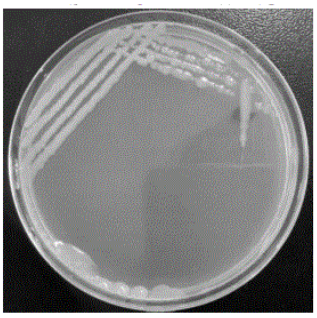

21: 2023/03028. 22: 2023/02/28. 43: 2023/05/09
51: A61K
71: Southwest Forestry University
72: LONG, Yuanli, WANG, Juan, JIA, Chengxinzhuo
54: TOOTHPASTE CONTAINING BAMBOO LEAF FLAVONE EXTRACT AND PREPARATION METHOD THEREOF
00: -
A toothpaste containing a bamboo leaf flavone extract and having antibacterial effect, including the following components in percentage by weight: 10 percent of bamboo leaf flavone extract, 8 percent of polyethylene glycol, 15 percent of sorbitol, 2.5 percent of sodium lauryl sulfate, 3 percent of xylitol, 0.6 percent of carrageenin, 0.2 percent of sodium alginate, 0.2 percent of sodium dihydrogen phosphate, 30 percent of dicalcium phosphate dihydrate, 0.6 percent of xanthan gum, 3 percent of PEG400, 15 percent of hydrated silica, 0.2 percent of sodium benzoate, 0.6 percent of essence, 0.5 percent of tetrasodium pyrophosphate, 0.2 percent of sodium phytate, 0.2 percent of tea polyphenol, and a remaining amount of deionized water. The toothpaste has multiple effects of helping produce saliva and slake thirst, refreshing the mind, resolving toxin with clearing coolness and refreshing breath, and has significant prevention and mitigation effects on common oral diseases.

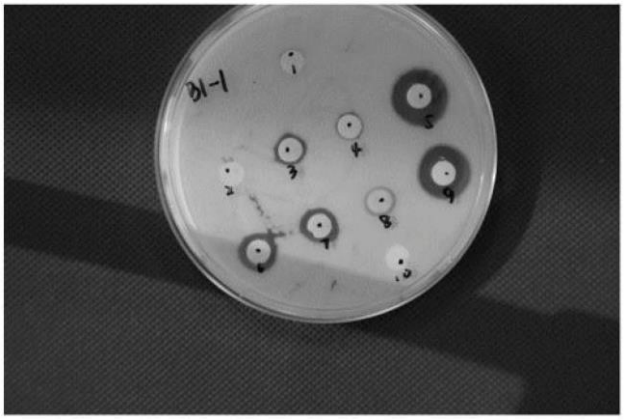

21: 2023/03029. 22: 2023/02/28. 43: 2023/05/03
51: H01J
71: University of Chinese Academy of Sciences
72: YANG, Bo, YAN, Zitao, SHU, Jinian, CHENG, Shiyu, WEI, Zhiyang
33: CN 31: 2023100339594 32: 2023-01-10
54: ONLINE MASS SPECTROMETER FOR FULL-SCALE HIGH-SENSITIVE DETECTION OF GAS-PHASE POLLUTANTS AND DETECTION METHOD
00: -
Disclosed are an online mass spectrometer for full-scale high-sensitive detection of gas-phase pollutants and a detection method. The mass spectrometer includes a high-energy photoionization ion source structure, an ion transmission structure, and a mass spectrometric detection structure. The high-energy photoionization ion source structure includes a high-energy photon generation structure, a sample injection tube, and an ionization chamber, wherein the high-energy photon generation structure generates high-energy photons by using neon as discharge gas, the high-energy photons penetrate an array microporous channel plate, and the high-energy photons are mixed with a to-be-detected gas introduced from the sample injection tube and ionize the to-be-detected gas; the ion transmission structure is provided with a radio frequency quadrupole rod; the mass spectrometric detection structure is provided with a pulse-compensation dual-electrode ion removal device. The mass spectrometer can realize full-scale and high-sensitive detection of all gas-phase organic and inorganic pollutants in the atmosphere.

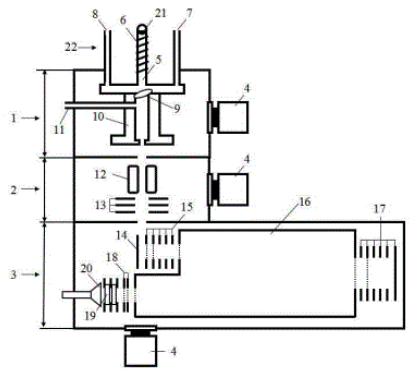

21: 2023/03030. 22: 2023/02/28. 43: 2023/05/03
51: G06K; G06N
71: Research Institute of Highway Ministry of Transport
72: LIU, Gang, WEI, Han, CAI, Shuri, WANG, Lei, HAO, Chaowei, ZHANG, Yueshan, GUO, Jie, FANG, Yu, GONG, Shangwen
54: DEEP LEARNING-BASED AUTOMATIC TARGET DETECTION MODEL FOR BRIDGE STRUCTURE DISEASES
00: -
The present invention provides a digital image processing and deep learning-based automatic target detection model for bridge structure diseases. A bridge disease image data set is made by digital image processing and a computer vision algorithm, automatic target detection for bridge structure diseases is performed on images by a deep learning algorithm, that the positions of diseases on the images can be determined, and candidate boxes are given. The automatic target detection model of the present invention is high in generalization capability, high in recognition speed, high in accuracy and low in cost, and lays a technical foundation for automatic bridge structure detection of unmanned aerial vehicles and the like in the future.

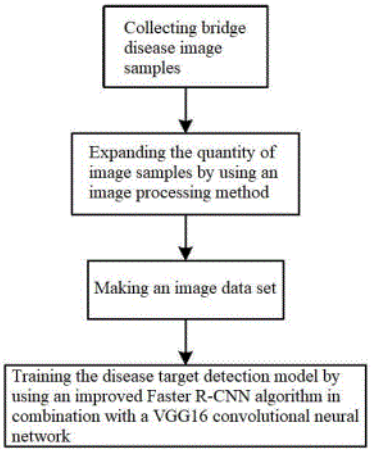

21: 2023/03031. 22: 2023/02/28. 43: 2023/05/03
51: G01M
71: Research Institute of Highway Ministry of Transport
72: LIU, Gang, WEI, Han, CAI, Shuri, WANG, Lei, GUO, Lei, ZHANG, Yueshan, GUO, Jie, FANG, Yu, GONG, Shangwen
54: NOVEL SIMPLY SUPPORTED BEAM BRIDGE STRUCTURE DAMAGE MONITORING SYSTEM
00: -
The present invention relates to a bridge structure real-time monitoring system, and in particular to a structure damage monitoring system, a corresponding vibration sensor arrangement method and a structure damage evaluation method for a simply supported beam bridge. Three-dimensional vibration sensors are arranged at a 1/4 span, a 1/2 span and a 3/4 span at the bottom of each single-slab beam of a simply supported beam bridge to collect vibration data produced when a single vehicle of a monitored model crosses the bridge. By performing big data clustering analysis on the vibration correlation among measuring points, the transverse transfer condition of the vibration of the simply supported beam bridge can be monitored according to the separation condition of clusters, so as to evaluate the damage condition of the bridge structure, send out early warning timely and avoid the condition of single beam stressing.

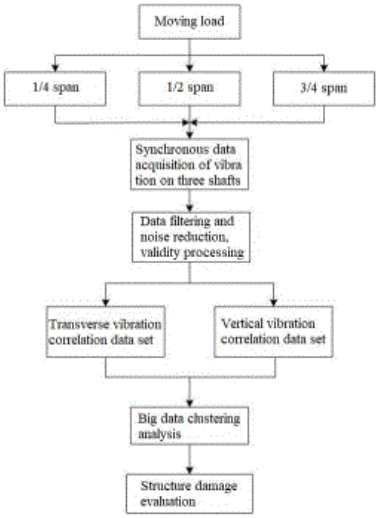

21: 2023/03032. 22: 2023/02/28. 43: 2023/05/08
51: H01M
71: Kunming University of Science and Technology
72: MENG, Qi, FEI, Zitong, DONG, Peng, ZHANG, Yingjie, LI, Chenchen, YAN, Jin
54: METHOD FOR REPAIRING CATHODE MATERIAL
00: -
The present invention relates to the technical field of electrode material repair, and in particular to a method for repairing a cathode material. The present invention provides a method for repairing a cathode material, including the following step: under a protective atmosphere, mixing a cathode material of a waste lithium ion battery, lithium sheets, a solid oxidant and benzyl alcohol for repairing to obtain a repaired cathode material of the lithium ion battery, wherein a temperature for the repairing is 20-70 degrees Celsius; and a ratio of an amount of substance of lithium atoms in the cathode material of the waste lithium ion battery to a total amount of substance of other metal atoms is (0.5-1): 1 (not 1: 1). The repairing method can be performed at normal temperature without strictly controlling a lithium dosage.

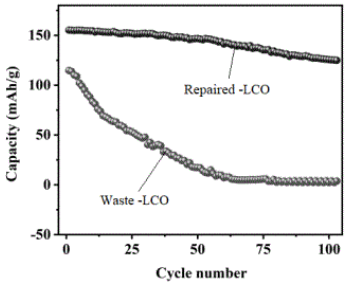

21: 2023/03033. 22: 2023/02/28. 43: 2023/05/08
51: A61K; A61P
71: Henan University of Chinese Medicine
72: JIN, Xiaoqin, FENG, Xiaodong, LI, Yanjie, XU, Hua, SUN, Helong, WANG, Yan, LIU, Haoyuan, HUA, Xiaoqiong, MAO, Fuqiang
54: EXTERNAL TRADITIONAL CHINESE MEDICINE PREPARATION FOR TREATING THYROID NODULES AND PREPARATION METHOD THEREOF
00: -
Disclosed is an external traditional Chinese medicine preparation for treating thyroid nodules, including the following raw materials in parts by weight: 15-25 parts of Os draconis, 18-25 parts of Concha ostreae, 18-22 parts of Rhizoma corydalis,15-25 parts of Herba asari, 15-25 parts of Eupolyphaga seu steleophaga, 18-25 parts of Semen momordicae, 3-8 parts of Borneolum syntheticum, 16-23 parts of Flos lonicerae, 16-22 parts of Herba taraxaci, 14-22 parts of Spica prunellae, 15-22 parts of Carapax trionycis, 15-22 parts of Bulbus fritillariae thunbergii, 9-15 parts of Rhizoma chuanxiong, 8-10 parts of Radix angelicae sinensis and 4-12 parts of Rhizoma cyperi. The preparation has significant effects of regulating qi-flowing for eliminating phlegm, eliminating goiter and resolving masses, nourishing yin to reduce pathogenic fire, and calming the heart and the liver, and can fundamentally treat thyroid nodules. The total effective rate is as high as 95 percent, and no adverse reactions are caused.

21: 2023/03034. 22: 2023/02/28. 43: 2023/05/09
51: B66B; F16F
71: Anhui Technical College of Mechanical and Electrical Engineering
72: NI, Jinting, ZHAO, Lei, ZHANG, Xiandong
54: ANTI-COLLISION ELEVATOR LANDING DOOR
00: -

Disclosed is an anti-collision elevator landing door, including a support frame, a hatch door, and a guide rail. A protective cover at the lower side of the front end of the elevator landing door body can protect the elevator landing door body and reduce the loss of materials. The arc-shaped protective cover can better bear and disperse the force towards both sides thereof, thereby enhancing the impact resistance of the protective cover, and prolonging the service life thereof. In addition, a telescopic cover at the top of the protective cover can expand and contract synchronously with the protective cover so as to prevent the infection of dust. When a side edge of the protective cover is impacted, a top plate will press an oscillating rod to swing and tilt, so that the impact force is absorbed and buffered, thereby reducing the damage to the elevator landing door body.

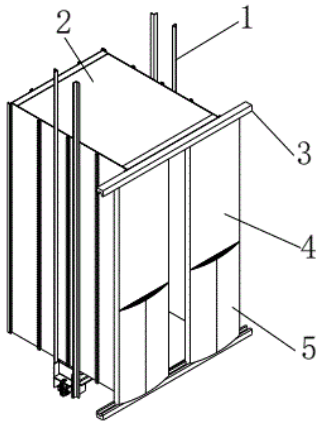

21: 2023/03035. 22: 2023/02/28. 43: 2023/05/09
51: G06Q
71: Research Institute of Highway Ministry of Transport
72: LIU, Gang, XU, Chongbang
54: SERVICE PERFORMANCE EVALUATION METHOD FOR HIGHWAY TUNNEL FACILITIES BASED ON BIG DATA
00: -
Provided is a service performance evaluation method for highway tunnel facilities based on big data. A service performance evaluation model and evaluation metrics of the highway tunnel facilities are built; a hierarchical structure + fuzzy calculation evaluation method for the service performance of the highway tunnel facilities is provided based on the evaluation model, and the weight of each evaluation metric is determined; and a related data sample database is established according to the evaluation metric values, relevant calculation parameters are determined from the sample data, and the evaluation values of metrics at various levels are obtained through fuzzy calculation, so as to realize the evaluation of the service performance of highway tunnel facilities. The evaluation method can obtain reliable evaluation results based on the analysis of a large number of metric sample data, and realize the theoretical prediction of the service performance of highway tunnel facilities.

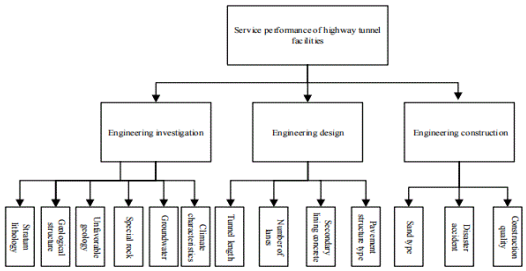

21: 2023/03036. 22: 2023/02/28. 43: 2023/05/09
51: A01C
71: Yanbian University
72: GAO, Yufu, RONG, Liping, XU, Bo, LI, Xinyu, WU, Bingchen, WANG, Yining, ZHAO, Xiangyu, WANG, Xinyue, ZHOU, Weihua
54: METHOD FOR IMPROVING GERMINATION RATE OF ACER PSEUDO-SIEBOLDIANUM SEEDS
00: -
The present invention provides a method for improving a germination rate of Acer pseudo-sieboldianum seeds. The method includes soaking the seeds at first to make seed embryos fully absorb water, then breaking a dormancy period by means of treatment, performing disinfection and insect killing on the seeds, and then storing the seeds in sand at low temperature, thus improving the germination rate; and seedlings can emerge in the second year by means of simple treatment without using growth regulators or freezing treatment.

21: 2023/03037. 22: 2023/02/28. 43: 2023/05/10
51: A23K; C07C
71: Zhejiang Vegamax Bio-technology Co., Ltd.
72: YANG, Caimei, LI, Hui, LIU, Jinsong, YANG, Biao, KONG, Suifei, NI, Zhibing
54: SYNTHESIS AND MICROCAPSULE SECONDARY COATING PREPARATION METHOD FOR SODIUM BUTYRATE

00: -
Disclosed in the present invention is a synthesis and microcapsule secondary coating preparation method for sodium butyrate. The sodium butyrate includes the components by mass: 50-70 parts of n-butyric acid, 71-104 parts of liquid sodium hydroxide, 3-8 parts of sodium citrate, 1-5 parts of a taste masking agent, 5-10 parts of a water-soluble coating agent, 40-60 parts of a fat-soluble coating agent and 0.5-2 parts of a flavoring agent. In the process of preparing the sodium butyrate, sodium citrate is added to play a buffering role in the synthesis of the sodium butyrate, and the taste masking agent is added after reaction is performed for a period of time, such that the sodium butyrate can be better mixed with the taste masking agent, thereby reducing odor of the sodium butyrate from a source

---

21: 2023/03038. 22: 2023/02/28. 43: 2023/05/10
51: G02F
71: Lingnan Normal University
72: LI, Qinghua, WANG, Linfeng, WANG, Deng, JIN, Xiao, LIU, Xuping, BAI, Jingke, LI, Dongyu
54: METHOD FOR PREPARING HIGH-COLOR-PURITY QUANTUM DOT
00: -
The present invention belongs to the technical field of nanomaterial synthesis, and particularly relates to a method for preparing a high-color-purity quantum dot. According to the preparation method provided by the present invention, the ultrahigh-color-purity quantum dot can be obtained stably, thereby providing a better choice for high quality display, quantum dot laser and multi-channel biomedical marker imaging.

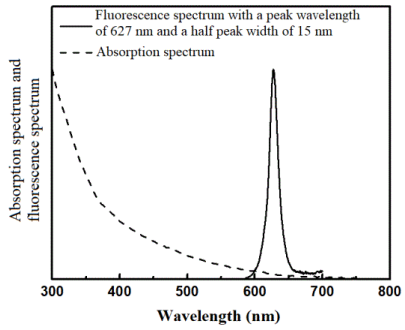

21: 2023/03039. 22: 2023/02/28. 43: 2023/05/03
51: C08G
71: Taiyuan University of Technology, Shanxi-Zheda Institute of Advanced Materials and Chemical Engineering
72: Pi WANG, Leilei ZHAO, Lan JIA
33: CN 31: 2023101432213 32: 2023-02-13
54: A SUPRAMOLECULAR POLYMER NETWORK BASED ON COLUMNAR AROMATIC HOST-GUEST INTERACTIONS AND HALOGEN BONDING
00: -
The present invention belongs to the field of organic synthesis and discloses a supramolecular polymer network based on column aromatics and a method for their preparation. AB-type monomers 1 containing column[5]aromatics and 4-(4-bromophenyl)pyridine derivatives are designed and synthesized by pyridine salt formation.1 Then, linear supramolecular polymers are obtained by host-guest interactions between column[5]aromatics and 4-(4-bromophenyl)pyridine. Since the bromine atom on 4-(4-bromophenyl)pyridine can interact with 4,4-bipyridine by halogen bonding, the linear supramolecular polymers can be further cross-linked to obtain supramolecular polymer networks. This supramolecular network polymer is easy to prepare and low cost, which provides a new method to construct supramolecular polymer network materials based on columnar aromatics.

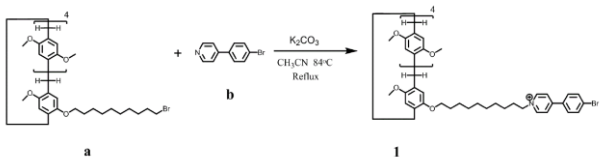

21: 2023/03040. 22: 2023/02/28. 43: 2023/05/03
51: B01F
71: Jimei Health Industry (Shandong) Co.
72: Haoran LIU, Linlin HAO, Guanghao LIU, Shanfang NIE, Ronghua WANG, Weifeng CHEN, Hua LUO, Guangliang LIU, Shuai WANG
54: A MIXING BOX FOR BEVERAGE PROCESSING
00: -
The invention discloses a mixing box for beverage processing, comprising a mixing box body, a discharge pipe provided on one side of the mixing box body and a stirring rod provided inside the mixing box body, the stirring rod is provided with a stirring leaf, an auxiliary stirring member is provided on one side of the stirring leaf, the auxiliary stirring

leaf is slidingly connected to the mixing box body, one end of the auxiliary stirring member is connected to an adsorption assembly, the adsorption assembly is mounted on a drive assembly, the drive assembly is connected to a linkage assembly. The drive assembly is connected with a linkage assembly. The present invention uses the above structure of a mixing box for beverage processing, can use the stirring leaves to stir the material in the mixing box body while also enabling the auxiliary stirring member to stir the material in the mixing box body in the vertical direction, thus improving the scope of application of this mixing device.

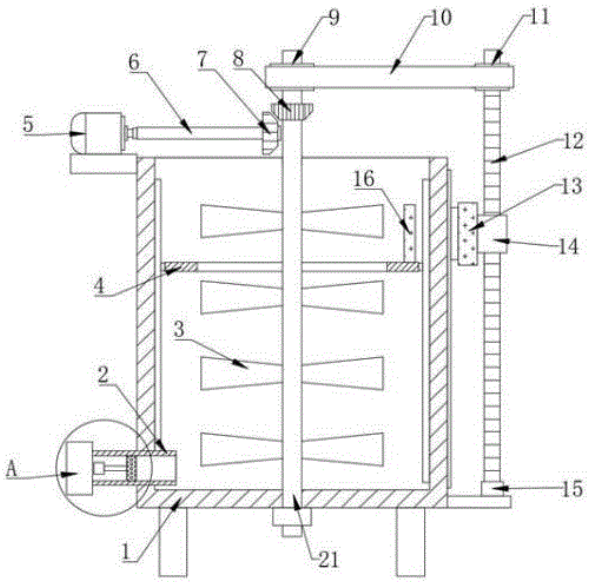

21: 2023/03041. 22: 2023/02/28. 43: 2023/05/03
51: B60Q; B60T; B60W
71: Anhui Science and Technology University
72: LI, Jin, SHU, Rendong, MEI, Fangfang, YUE, Lang, GAO, Xuelian, DAI, Zelin
54: AUTOMOBILE REVERSING SAFETY CONTROL SYSTEM AND METHOD
00: -
The present invention provides an automobile reversing safety control system and method, to achieve safety control of an automobile by solve reversing safety problems. The system includes a signal acquisition module, a control module and an execution module, where the signal acquisition module, including a gear shift position sensor, an automobile speed sensor, an acceleration sensor and a throttle position sensor, is configured for acquiring reversing related signals; the control module, including a signal processing sub-module and a decision-making sub-module, is configured for receiving and processing signals and outputting a control signal to the execution module after decision-making; the execution module, including an electronic throttle, a braking device and a warning light, is configured for achieving reversing speed control and light warning. The present invention is particularly suitable for reversing safety control and has a high social use value and application prospects.

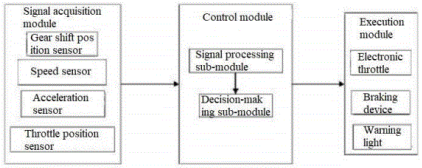

21: 2023/03042. 22: 2023/02/28. 43: 2023/05/09
51: G01N
71: Zhangye Academy of Forestry
72: Xiaoping TIAN, Yufang ZHAN, Bin CHEN, Jian MA, Wanjian QIAN, Haixia ZHOU, Xiaofei LI
54: AN AUXILIARY DEVICE FOR SURVEYING THE DENSITY OF SOIL SEED BANKS IN DESERT VEGETATION
00: -
The present invention discloses an auxiliary device for surveying the density of soil seed banks of desert vegetation, the structure of which includes a detection box, a placement table, an infrared camera and a detection assembly. The front end of the testing box is connected to the left side of the door by rotation, and the right side of the door is installed with a handle. The bottom of the testing box is equipped with a placement table, the bottom of the testing box is fixedly connected to the console, and the console is equipped with support feet below. By setting up the detection assembly, when the density is detected, the detection net is spread by extending the telescopic rod assembly, and the first motor drives the lower linkage to rotate and fix the detection net horizontally on top of the detection table. When the test is finished, the first motor fixes the test net vertically to the internal side of the test box, by means of the telescopic rod assembly that is provided. By turning on the second motor, the second motor drives the threaded rod to rotate in the

threaded barrel, thus driving the sliding block to slide outwards and extend the inspection net, and when the threaded rod drives the sliding block to slide inwards, the distance between the upper and lower connecting rod is reduced, facilitating the adjustment and replacement of the inspection net.

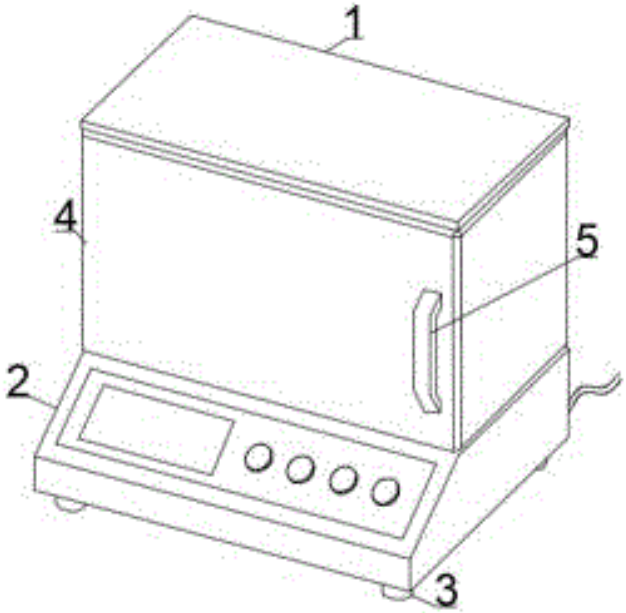

21: 2023/03043. 22: 2023/02/28. 43: 2023/05/09
51: A01G
71: Lanzhou University, Zhangye Academy of Forestry
72: Xiaoping TIAN, Zhongren NAN, Liping DING, Peng CHEN, Xiaopeng LI, Ziyu GUO, Dan XIA
54: A METHOD FOR IMPROVING THE SURVIVAL RATE OF QILIAN ROUND CYPRESS AFFORESTATION IN ARID AREAS
00: -
The present invention discloses a method for improving the survival rate of Qilian round cypress afforestation in arid areas. Step 1, horizontal ditch catchment preparation, Step 2, collection of surface runoff: (1) catchment slope; (2) laying of catchment materials, choose plastic film or linoleum on the slope; Step 3, seedling planting; Step 4, tree tray mulching: (1) determine the mulching specifications; (2) mulching in the 0.8-1.0 m range around the rootstock of the planted seedlings; after loosening and weeding the tree tray, mulching in the tree tray, the tree tray mulching into a concave shape;. Step 5. Nurture management. The invention uses a method for improving the survival rate of Qilian round cypress afforestation in arid areas, improving the survival rate of Qilian round cypress afforestation in arid shallow mountainous areas, expanding the scale of Qilian round cypress plantation population, providing a technical guarantee for the widespread application of Qilian round cypress afforestation and landscaping in arid areas, improving the ecological environment, and enhancing regional water conservation and soil conservation capacity.

21: 2023/03044. 22: 2023/02/28. 43: 2023/05/10
51: A61M
71: Shandong First Medical University And Shandong Academy of Medical Sciences
72: JI, Bo, ZHAO, Donghua, YUN, Tianxiang
54: DRAINAGE DEVICE FOR DEPARTMENT OF THORACIC SURGERY
00: -
Disclosed is a drainage device for department of thoracic surgery, including a base, a water-sealed drainage bottle, retaining clips and a support rod. The retaining clips are capable of being connected to a drainage hose and fixed to a body and clothing of a patient, so as to fix the drainage hose in a working process of the device, so the stability of the device is improved, and the drainage hose is effectively prevented from causing harm to an injury of the patient. Meanwhile, there is at least one retaining clip. When the patient needs to stand up or move, the relative positions of the retaining clip and the patient can be changed, and the retaining clip is connected to the support rod, so that discomfort brought by deformation of the drainage hose to the patient can be reduced in the moving processes of the patient and the device.

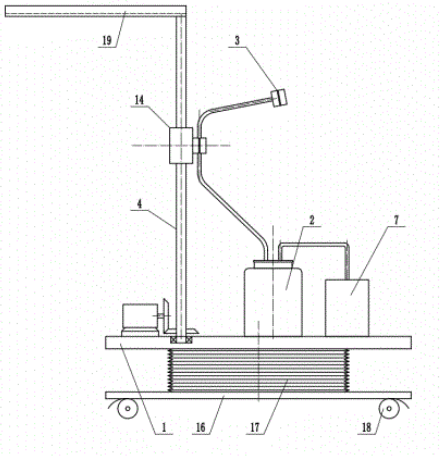

21: 2023/03045. 22: 2023/02/28. 43: 2023/05/10
51: A63B
71: Shandong First Medical University And Shandong Academy of Medical Sciences
72: JI, Bo, ZHAO, Donghua, YUN, Tianxiang
54: POST-THORACIC SURGERY EXERCISE DEVICE
00: -
The present invention discloses a post-thoracic surgery exercise device and relates to the technical field of medical rehabilitation equipment. A main structure of the post-thoracic surgery exercise device includes a chair, a backrest, training components and a drive system. The backrest is arranged on the rear side of the chair, the training components are rotatably arranged on both sides of the backrest, and the drive system is arranged under the chair and is in drive connection to the training components. According to the post-thoracic surgery exercise device in the present invention, the two training components are driven synchronously through a motor, so that both arms are capable of being driven synchronously to move. Meanwhile, by adjusting the rotating speed of the motor, the driving velocity of the training components can be adjusted, so that the training intensity is adjusted.

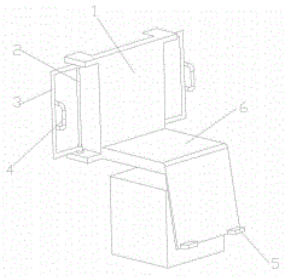

21: 2023/03046. 22: 2023/02/28. 43: 2023/05/03
51: G01N
71: Shandong Institute of Geological Sciences
72: ZHANG, Qingli, CHENG, Wei, NIU, Zhili, ZHOU, Changxiang
54: AEROSOL SAMPLING FOCUSING DEVICE OF LA-MC-ICP-MS
00: -
Disclosed is an aerosol sampling focusing device of a LA-MC-ICP-MS. The device includes an aerosol focuser, a plasma mass spectrometer, an ablation cell and a laser, where a sample to be ablated is arranged in the ablation cell, carrier gas aerosol is transported to a carrier gas aerosol hose connected with the other end of the ablation cell, the carrier gas aerosol hose is connected with an air inlet pipe orifice of the aerosol focuser, and the rear end of a semi-permeable membrane tube is connected with an air outlet pipe orifice. The ion concentration of an element to be detected in the plasma mass spectrometer is increased by discharging the carrier gas, so that the sensitivity of the instrument is improved, and the detection limit of the element to be detected is effectively improved under the condition that other instruments and devices are not changed.

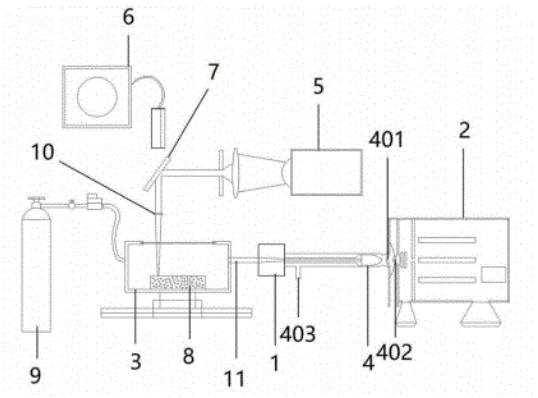

21: 2023/03047. 22: 2023/02/28. 43: 2023/05/03
51: E02D
71: No. Three Engineering Co., LTD Of CCCC First Highway Engineering Co., LTD
72: Qiang ZHANG, Kesen HUANG, Xingcun QIU, Long A, Lianyu FAN, Hangbing HOU, Qianlong SUN
54: A METHOD OF DRY WORKING PILE FOUNDATION FORMATION IN SOFT SANDWICH GEOLOGY
00: -
The invention discloses a method of forming pile foundations for dry work in soft interlayer geology, comprising the following steps: S1. construct and placing a sample; S2. lower a steel bail; S3. use a rotary drilling rig to drill into the soft interlayer; S4. rotary drilling until the hole is collapsed; S5. backfill with hydraulic soil or lime soil after the collapsed hole in the soft interlayer; S6. replace the rotary drilling rig with an impact drilling rig, using the impact drilling rig to perform impact extrusion in the collapsed hole; S7 . replace the impact drilling rig with a rotary drilling rig; S8. check whether the drilling bucket of the rotary drilling rig passes through the weak interlayer; S9. use the rotary drilling rig to drill until the hole is formed; S10. lower the reinforcement cage; S11. pour the pile concrete. The invention uses the above-mentioned a soft sandwich geology dry operation pile foundation drilling method, can reduce the construction vibration, less noise, reduce the interference to the surrounding residents, and can save water resources, reduce the pollution of the environment.

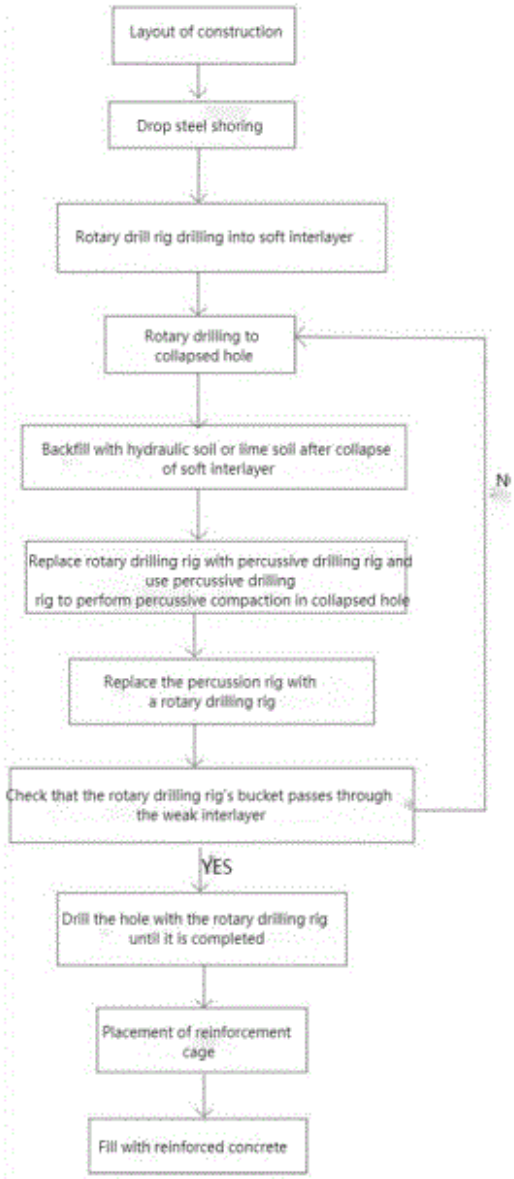

21: 2023/03048. 22: 2023/02/28. 43: 2023/05/03
51: G01S
71: Dalian University of Technology
72: Ji WANG, Shilin HUO, Yiling WANG, Rui LI, Xiao LIU, Yujun LIU
54: A HULL BLOCK DETECTION SYSTEM BASED ON 3D SCENE SCANNING AND ITS METHOD
00: -
The invention discloses a hull section detection system based on three-dimensional scene scanning and its method. The system includes a three-dimensional scene scanning device for scanning the hull section to obtain three-dimensional point cloud data. The intelligent recognition system is connected

to the 3D scene scanning equipment to identify the component point cloud data. The intelligent matching system is connected to the intelligent recognition system, which is used to match the component model with the preset model of the pre-established hull section. The error-detecting system is used to calculate the error between the construction parameter information and the preset parameter information of the hull member in the preset model. The invention adopts a hull section detection system based on three-dimensional scene scanning and its method with the above structure, it obtains a large amount of three-dimensional point cloud data by setting a three-dimensional scene scanning device, which improves the measurement efficiency and measurement accuracy. By setting up the intelligent recognition system and intelligent matching system, the data processing speed is greatly improved and the measurement efficiency is further improved.

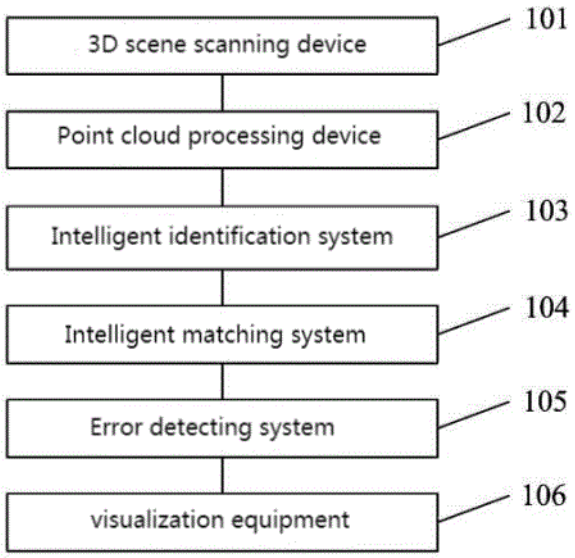

21: 2023/03049. 22: 2023/02/28. 43: 2023/05/03
51: B21D
71: Dalian University of Technology
72: Ji WANG, Shuyang HUANG, Rui LI, Xiao LIU, Yujun LIU
54: A DEVICE FOR HYDROTHERMAL BENDING PLATE DEFORMATION AIDED BY PULSED ELECTROMAGNETIC FORCE
00: -
The invention discloses a device for hydrothermal bending plate deformation aided by pulsed electromagnetic force, which belongs to the technical field of line heating plate deformation control assisted by electromagnetic force. the main circuit is electrically connected to the output end of the IGBT drive circuit, the IGBT drive circuit is electrically connected to the first and-not gate logic circuit through the first optocoupler isolation circuit, the first and-not gate logic circuit and the second and-not gate logic circuit are electrically connected to the output end of the signal generation circuit and the voltage comparator circuit, the voltage comparator circuit is electrically connected to the control limit output end of the main circuit, the second and-not gate logic circuit is electrically connected to the thyristor trigger circuit through the second optocoupler isolation circuit, the output end of the thyristor trigger circuit is electrically connected to the main circuit, and the working output end of the main circuit is electrically connected to the electromagnetic coil; According to the size and forming requirements of the steel plate to be processed, the size and frequency of the electromagnetic force are set so that the electromagnetic coil applies an approximate continuous pulse force to the steel plate, it restrains the deformation of the steel plate after heating and obtains the required deformation after water cooling.

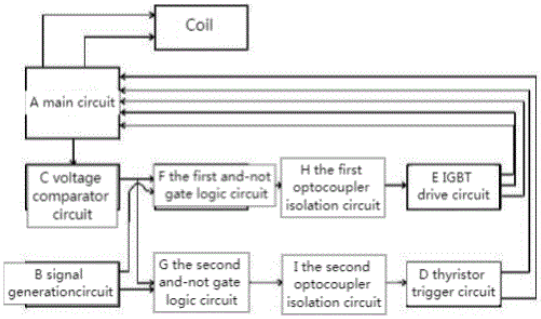

21: 2023/03050. 22: 2023/02/28. 43: 2023/05/03
51: B63B
71: Dalian University of Technology
72: Ji WANG, Yiling WANG, Rui LI, Xiao LIU, Yujun LIU
54: A METHOD FOR DETECTING SHAFT LOADS WHEN A SHIP IS IN OPERATION
00: -
The present invention discloses a method for detecting the load on a shaft system when a ship is in operation. It relates to the technical field of dynamic load testing of a ship's propulsion shaft

system, using radio-resistive strain gauges to collect cross-sectional strain, connecting a wireless signal transmitter node through a terminal, fastening the wireless strain transmitter node to the surface of the shaft system and rotating with the shaft; a synchronous long-range wireless base station receives the strain signal from the wireless strain transmitter node; a magnetic angle sensor is used to The strain angle is measured using a magnetic angle sensor. The strain signal is analysed using the Fast Fourier Transform and a digital filter is designed to process the strain signal to obtain the bending moment of each section of the shaft system. The invention uses the above structure of a method for detecting the load on the shaft system when the ship is in operation, which can measure not only the bearing vertical load, but also the transverse load and azimuth angle, with easy operation, high stability, better applicability and higher versatility.

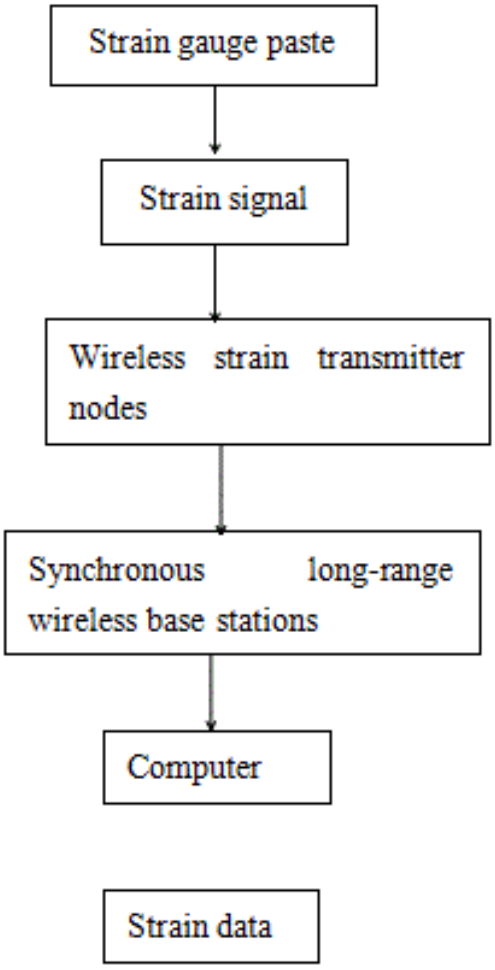

21: 2023/03051. 22: 2023/02/28. 43: 2023/05/03
51: E02D
71: Dalian University of Technology
72: Ji WANG, Shuyang HUANG, Rui LI, Xiao LIU, Yujun LIU, Shun WANG

54: A JACK-UP PLATFORM PILE LEG TIRE TOOL FOR DRILLING

00: -

The present invention discloses a pile leg tire tool for a jack-up platform for drilling, comprising two tire boxes and a cover plate provided on the tire boxes. The cover plate fixes a first workpiece on one of the tire boxes, the cover plate fixes a second workpiece on the other tire box, the tire box is connected to the tire box seat by a pad plate, the tire box seat is fixed to the ground, the tire box seat is provided with a tire frame, the tire frame is provided with a third workpiece, and the bottom of the tire frame is provided with a non-standard column seat. The present invention adopts the above structure of a self-elevating platform pile leg tire tool for drilling, the tire tool should provide support and positioning of the platform pile leg within a certain range, with the characteristics of high versatility, simple adjustment and saving construction time.

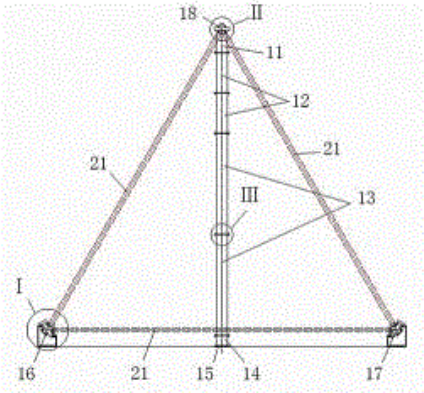

21: 2023/03052. 22: 2023/02/28. 43: 2023/05/03
51: G06F; G06T; G06N
71: Institute of Forest Resource Information Techniques, Chinese Academy of Forestry
72: Fan LI

54: A WILDLIFE TARGET MONITORING SYSTEM BASED ON DEEP LEARNING AND ITS METHOD

00: -

This invention discloses a wild animal target monitoring system based on deep learning and its method, including an animal video monitoring mechanism, an animal image extraction mechanism,

an animal audio extraction mechanism, a database, and a recognition module embedded with a deep learning model. The animal video monitoring mechanism is connected to the animal image extraction mechanism and the animal audio extraction mechanism respectively. The animal image extraction mechanism, the animal audio extraction mechanism, and the database are connected to the recognition module. The invention adopts a wild animal target monitoring system based on deep learning of the above structure. By applying deep learning to the monitoring and identification of wild animals, it realizes intelligent and unmanned operations such as animal species identification, quantity statistics, behavior monitoring, and habitat observation under field conditions, and improves monitoring efficiency and monitoring accuracy.

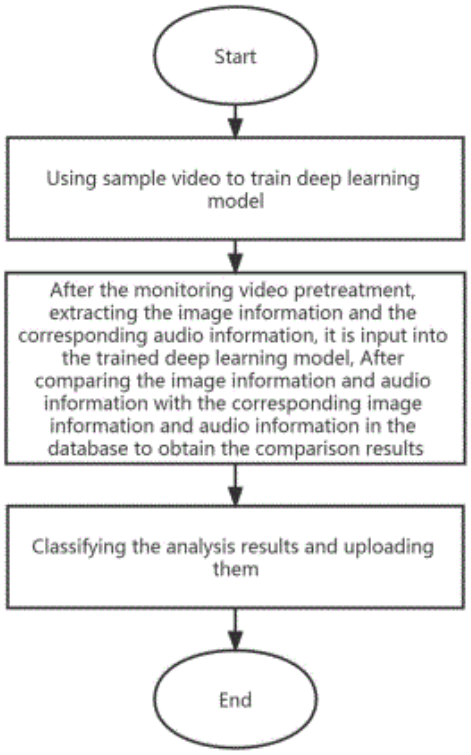

21: 2023/03053. 22: 2023/02/28. 43: 2023/05/03
51: G06N; H04W
71: Institute of Forest Resource Information Techniques, Chinese Academy of Forestry
72: Fan LI
54: A DEVICE FOR FORESTRY ENVIRONMENT MONITORING NETWORKS BASED ON LORA AND ITS METHOD
00: -
This invention discloses a device for forestry environment monitoring networks based on Lora and its method, including the data acquisition and processing module, the LORA wireless ad hoc network, the cloud server, the display terminal, and the power module, which is used to power the above components; The data acquisition and processing module communicates with the cloud server through the LORA wireless ad hoc network, and the cloud server is connected to the display terminal. The invention provides a device for forestry environment monitoring networks based on Lora and its method, it forms a self-organizing network in the communication mode, fully covers the forest farm monitoring, and detects various environmental factors. It can monitor soil parameters, atmospheric parameters, light parameters, and plant parameters in the forestry microenvironment in all aspects, and provide comprehensive, real-time, and reliable data for forestry workers.

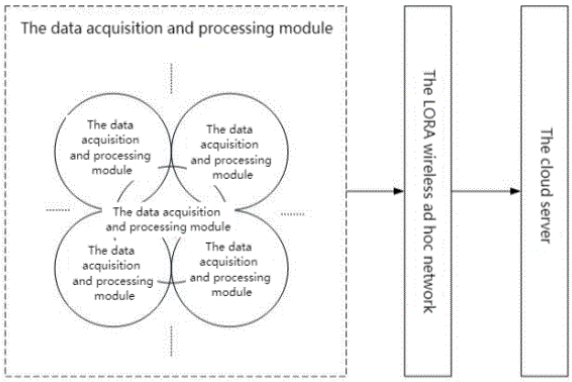

21: 2023/03054. 22: 2023/02/28. 43: 2023/05/03
51: G08B
71: Institute of Forest Resource Information Techniques, Chinese Academy of Forestry
72: Fan LI
54: A FOREST FIRE MONITORING SYSTEM BASED ON DEEP LEARNING AND ITS METHOD
00: -
This invention discloses a forest fire monitoring system based on deep learning, including several cruise lines in the forest and UAVs patrolling along the cruise line. The UAV is equipped with a flight control module, a GPS positioning module, an image acquisition module, a fire warning module embedded with a deep learning model, and a wireless communication module. The GPS positioning

module and the image acquisition module are connected to the fire warning module, and the fire warning module communicates with the monitoring terminal through the wireless communication module. The GPS positioning module is also connected to the flight control module to control the UAV to cruise along the corresponding cruise line. The forest fire monitoring system based on deep learning using the above structure has the advantages of low cost, large monitoring range, and high detection accuracy, and it improves the effectiveness of the data set and greatly improves the accuracy of field detection.

21: 2023/03055. 22: 2023/02/28. 43: 2023/05/03
51: C22C; C23C
71: Wuhan University of Science and Technology
72: Lin WU, Ying LIU, Ya HU, Shi Hu, Xiaoyu YANG, Baoguo ZHANG, Chang XU, Linghui XIANG, Shicheng RUAN, Jiageng SUN, Yuan WANG

54: AN INSULATING COATING FOR ORIENTED SILICON STEEL AND ITS PREPARATION METHOD AND APPLICATION

00: -

The invention discloses an insulating coating for oriented silicon steel and its preparation method and application. The insulating coating is calculated by the mass fraction, including 5-35 portions of large particle silica sol, 10-30 portions of aluminum dihydrogen phosphate, 5-35 portions of small particle silica sol, 0.5-5 portions of chromic anhydride, 1-10 portions of thickener, 0.01-0.5 portions of titanium dioxide and 0-78.49 portions of deionized water; During preparation, the thickener, deionized water, aluminum dihydrogen phosphate, large particle silica sol, small particle silica sol, chromic anhydride and titanium dioxide were added into the reactor in turn and stirred for a certain time, and then stood at room temperature for 0.5~1h; During application, the coating roller is coated on the oriented silicon steel sheet after cleaning and drying pretreatment, and solidified and sintered, and the film thickness is controlled. The coating made of the coating provided by the invention has smooth and uniform surface, bright color, excellent adhesion, corrosion resistance, thermal stability and insulation, and can modify the defects of exposed crystal bright spots caused by poor quality of magnesium silicate substrate; It can be applied to surface coating of oriented silicon steel prepared by rolling process, with low commissioning cost and easy to popularize.

21: 2023/03056. 22: 2023/02/28. 43: 2023/05/03
51: A62C
71: Hefei University of Technology
72: Changjian WANG, Hongsheng Ma, Yang Li, Tao Du

54: A TEST SYSTEM AND METHOD FOR EXPLOSION DRIVEN WATER MIST FIRE EXTINGUISHING

00: -

The invention discloses an explosion driven water mist fire extinguishing test system and test method comprising: a closed projectile body with a circular

internally threaded hole at the centre of the upper head; a support frame with a circular internally threaded hole at the geometric centre of the rectangular top plate; a primary explosive column wrapped with an electric detonator; an explosive positioning auxiliary device mounted inside the projectile body; an electric detonator wire extending along the explosive positioning auxiliary device to the exterior of the projectile body connected to the detonator; a data acquisition subsystem comprising a first pressure sensor, a second pressure sensor, a third pressure sensor, a fourth pressure sensor, an anti-noise signal line, a charge amplifier, an oscilloscope, a computer and a high-speed camera; four sensor columns arranged at intervals along the geometric centre of the detonating charge column in the direction of the rays of the projection point on the ground. The invention can consider the effect of different detonation energies and different detonation positions on the efficiency of water mist extinguishing, providing a safe test method for testing the performance of explosion driven water mist extinguishing

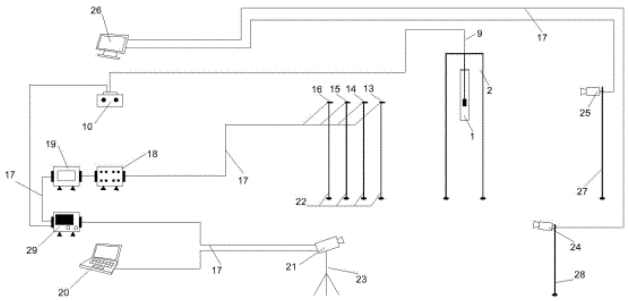

21: 2023/03057. 22: 2023/02/28. 43: 2023/05/03
51: E21D
71: Hefei Design and Research Institute of Coal Industry Co., Ltd.
72: LV, Lin, XU, Huidong, XU, Bin, ZHANG, Yong, SHI, Changsheng, LIU, Qinglin, WANG, Chunqin, QIN, Yong

54: DEFLECTION MEASUREMENT AND CONTROL DEVICE FOR TBM

00: -

Disclosed in the present application is a deflection measurement and control device for a TBM. The device can monitor deflection magnitude of drilling in real time and perform timely adjustment. The device is applicable to rock strata with different strength and integrity, can evaluate trafficability of a stratum with different attributes, and performs self-control and correction under complex geological conditions and drill bit deflection conditions during drilling in a construction process.

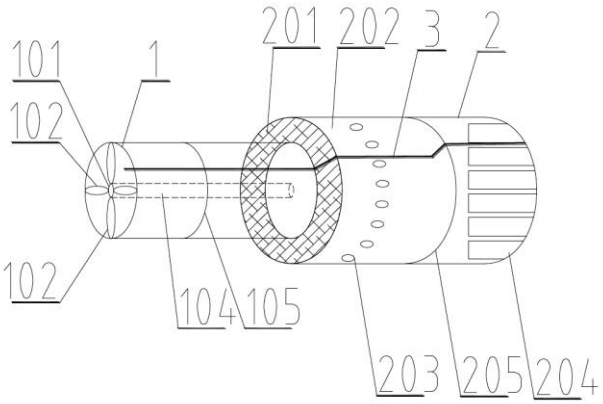

21: 2023/03058. 22: 2023/02/28. 43: 2023/05/03
51: A61B
71: Jinan Ruite Security Equipment Co., Ltd.
72: Xueli ZHAO, Yao LI

54: A MENTAL HEALTH TESTING DEVICE BASED ON BRAIN WAVE DATA AND ITS TESTING METHOD

00: -

This invention discloses a mental health testing device based on brain wave data and its testing method, which includes a host, which is connected with a brain wave acquisition electrode and an electrostatic bracelet. The brain wave acquisition electrode is used to collect brain wave data; The electrostatic bracelet is used to absorb static electricity; The host is used to extract mental health-related EEG features from EEG data and output concentration, relaxation parameters, and EEG parameters to establish the norm range and reflect the mental health of the subjects from several dimensions. The invention can accurately analyze and output brain wave parameters based on the brain wave signals generated by collecting brain activities. At the same time, it relies on brain wave algorithms and brain wave big data to analyze and calculate the mental health status of the object. Compared with the form of scale questions and answers, this application does not require questionnaires and scales, which can effectively eliminate subjective interference, thereby improving the accuracy of psychological tests.

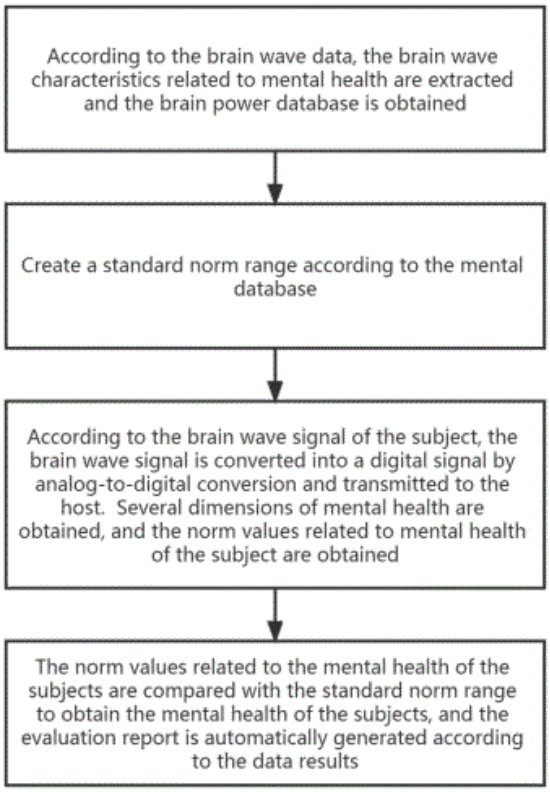

21: 2023/03059. 22: 2023/02/28. 43: 2023/05/08
51: B04B
71: Anhui Jianzhu University
72: YE, Zhongbao, LV, Qiuling, ZHOU, Xingui, CAO, Guangyong, WANG, Xueru, LI, Chenfeng, WANG, Yuehu

54: AUXILIARY DEVICE FOR MOUNTING TEST MEMBER OF MTS TESTING MACHINE

00: -

Provided is an auxiliary device for mounting a test member of an MTS testing machine. The auxiliary device includes positioning guide rods. In a traditional MTS test, when an extensometer on the test member is mounted, four measuring columns on the extensometer are observed by eyes to ensure that bases of the measuring columns and an axis of the test member are in a vertical section, and apparently, it is difficult to ensure axial displacement of the test member measured during the test with the method; in order to reduce errors of test data, the device determines positions of the four measuring columns of the extensometer by the positioning guide rods when manufacturing the test member for the test, so as to ensure that the measured data are the axial displacement of the test member, which satisfies test requirements more easily.

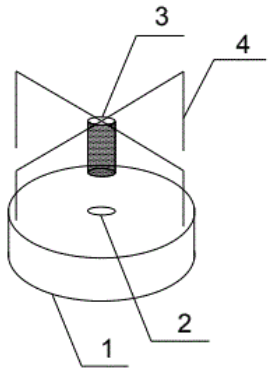

21: 2023/03060. 22: 2023/02/28. 43: 2023/05/08
51: B24B
71: West Anhui University, Anhui Lu'an Hengyuan Machinery Co., Ltd.
72: ZHU, Yanyan, SHI, Yun, CHEN, Rongna, DU, Huisheng, QUAN, Lianghong, TIAN, Tonggui
33: CN 31: 2023101688357 32: 2023-02-27

54: POLISHING DEVICE FOR PROCESSING ELECTRONIC COMPONENTS

00: -

The present invention relates to the technical field of polishing equipment, and provides a polishing device for processing electronic components, which comprises a bearing mechanism, a clamping mechanism, a driving mechanism, a rotating assembly, a first polishing assembly and a second polishing assembly, wherein the bearing mechanism comprises a machine frame, a first fixing frame and a second fixing frame; the first fixing frame comprises an upper frame, a lower frame, a mounting plate and a first bracket; the mounting plate is connected to a top portion of the upper frame; the rotating assembly is rotatably connected to a middle portion of the upper frame; a middle portion of the first polishing assembly is arranged in the rotating assembly, and the driving mechanism is arranged at one side of the rotating assembly; one side of the driving mechanism is in engaged connection with the first polishing assembly; one end of the rotating assembly is provided with a first polishing block; an upper end of the second polishing assembly is arranged on a side wall of the first bracket and a lower end thereof is arranged on a side wall of the lower frame, and an upper portion of the second polishing assembly is in engaged connection with driving mechanism, a second

polishing block is arranged at a lower portion of the second polishing assembly, and the polishing device for processing electronic components has characteristics of high energy utilization rate, high working efficiency and strong practicability.

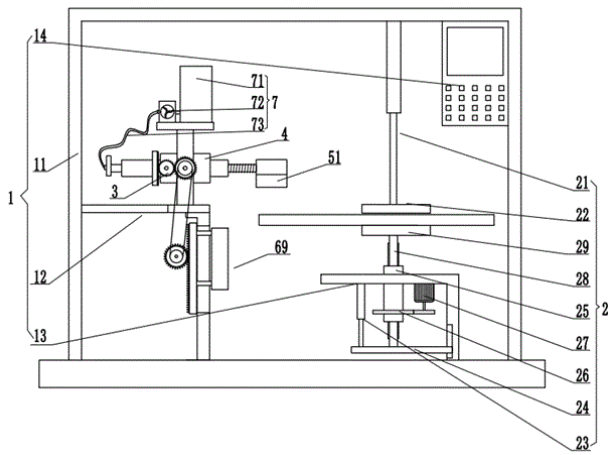

21: 2023/03061. 22: 2023/02/28. 43: 2023/05/08
51: A01G
71: LANZHOU UNIVERSITY
72: Shenghua CHANG, Fujiang HOU, Wanhe ZHU, Cheng ZHANG, Chunmei WANG, Shanning LOU, Yarong GUO
54: A METHOD OF SOWING MIXED ALFALFA AND TALL FESCUE ON SALINE SOILS
00: -
The present invention discloses a method for mixed sowing of alfalfa tall fescue on saline land, comprising the following steps: S1, land preparation; S2, fertilization; S3, sowing; S4, field management. The present invention uses a method of mixed sowing of alfalfa tall fescue on saline land as described above to increase the intensity of utilization of saline land, to provide a model for saline land management and to help the development of grass and grazing industry.

21: 2023/03062. 22: 2023/02/28. 43: 2023/05/08
51: C22C
71: Taiyuan University of Technology
72: Changjiang ZHANG, Qihao LIAN, Hong FENG, Jianchao HAN, Tao WANG, Shaoyong ZHI
33: CN 31: 2022110295545 32: 2022-08-25
54: THE PREPARATION METHOD AND APPLICATION OF A SHORT-TIME HIGH-TEMPERATURE TITANIUM ALLOY SHEET WITH HIGH-STRENGTH AND HIGH-TOUGHNESS
00: -
The invention discloses a preparation method and application of a short-time high-temperature titanium alloy sheet with high-strength and high-toughness, which relates to the technical field of titanium alloy material. According to the mass percentage, the element composition includes 7 %-8 % Al, 3 %-4 % Sn, 10 %-12 % Zr, 2 %-3 % Mo, 2 %-3 % Nb, 1 %-2 % W, 0.5 % 0.7 % Si, residual Ti and trace inevitable impurity elements. The invention adopts the thermomechanical treatment process of solid solution quenching + forging billet + double lining plate rolling + aging annealing to obtain a large-size titanium alloy plate with fine grains, nano-dispersed second phase, no edge crack, excellent room temperature process plasticity and high temperature instantaneous strength, which meets the requirements of aerospace and military equipment industries for the comprehensive properties of alloy materials.

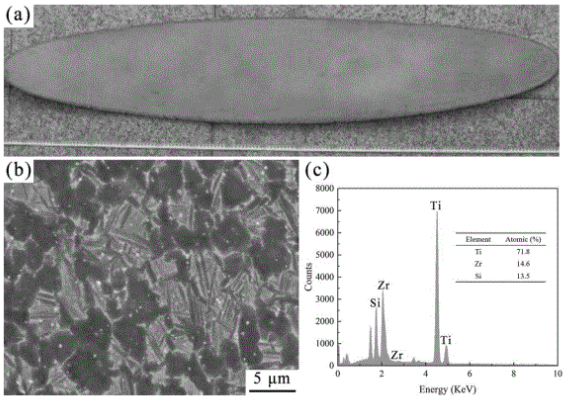

21: 2023/03063. 22: 2023/02/28. 43: 2023/05/08
51: A01G
71: Xi'an University of Technology
72: Shengjun SHAO, Ruifeng GUO, Hao WU
54: A PLANT CULTIVATION METHOD FOR PREVENTING SOIL EROSION
00: -
The invention discloses a plant cultivation method for preventing soil erosion, comprising the following steps: S1, select the soil, remove weeds, cultivate the soil, apply base fertilizer in the soil, and divide the soil into grids; S2, the first seed and the second seed were pretreated respectively, and the first seed was sown at the end of June, and then the second seed was sown. S3, timely check seedlings after

sowing supplementary inoculation, irrigation, fertilization.

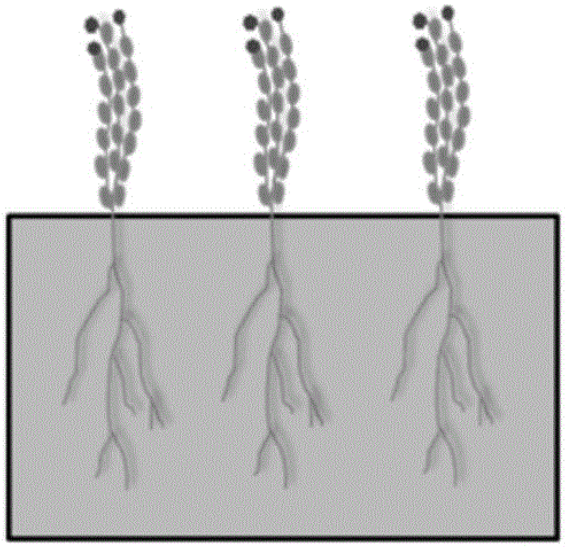

21: 2023/03064. 22: 2023/02/28. 43: 2023/05/09
51: E02D
71: Xi'an University of Technology
72: Shengjun SHAO, Shuai SHAO, Xueliang ZHU
54: A PILE FOUNDATION TREATMENT METHOD TO ELIMINATE THE NEGATIVE FRICTION OF COLLAPSIBLE LOESS
00: -
This invention discloses a pile foundation treatment method to eliminate the negative friction of collapsible loess, including the following steps: S1, pull out the pile hole at the pile foundation position; S2, insert PVC sleeve into pile hole; S3, insert concrete piles along the PVC sleeve, and press the concrete piles into the non-collapsible strata by the static pressure method. When the bearing capacity of the concrete pile reaches the maximum, stop the static pressure; S4, the collapsible loess around the PVC sleeve is treated by soaking method; S5, after the collapsible deformation of loess around the PVC sleeve is completed, cement slurry is injected along the gap between the sleeve and the concrete pile. The invention adopts the above-mentioned pile foundation treatment method to eliminate the negative friction of collapsible loess, avoids a large number of engineering costs caused by the replacement, compaction, compaction, silicification and other methods of collapsible loess foundation, improves the overall bearing capacity of the pile, and shortens the construction period of treating collapsible strata by traditional methods.

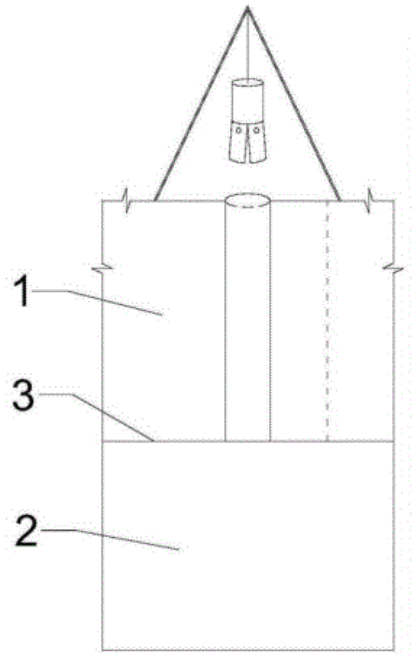

21: 2023/03065. 22: 2023/02/28. 43: 2023/05/09
51: G06T
71: Shihezi University
72: Lei WANG, Qiao LIU, Hongwen ZHANG, Meng WANG, Jing'an FENG, Siyu YAO
54: AN IMAGE CLASSIFICATION, RECOGNITION AND DETECTION METHOD FOR CROPS AND WEEDS
00: -
The invention discloses an image classification, recognition and detection method for crops and weeds, which is based on anti-noise convolution neural network, including the following steps: acquiring the image to be classified; The noise mapping layer detects various types of noise and generates a noise map for each image to indicate noisy and undamaged images; Adjust the layer size adaptively according to the noise to improve the robustness of the network to noise; Data enhancement based on noise map is used to generate additional data for convolutional neural network; Noise adaptive convolution layer, recognition and extraction of image region features; The noise adaptive pooling layer down-sampling the feature map to reduce the data dimension and improve the learning speed; Full connection layer to realize the final classification and prediction; Output

image classification results. The invention adopts an image classification, recognition and detection method of crops and weeds with the above structure, which can accurately identify and classify cotton plants and weeds, and prepare for the next step of mechanical topping of cotton plants.

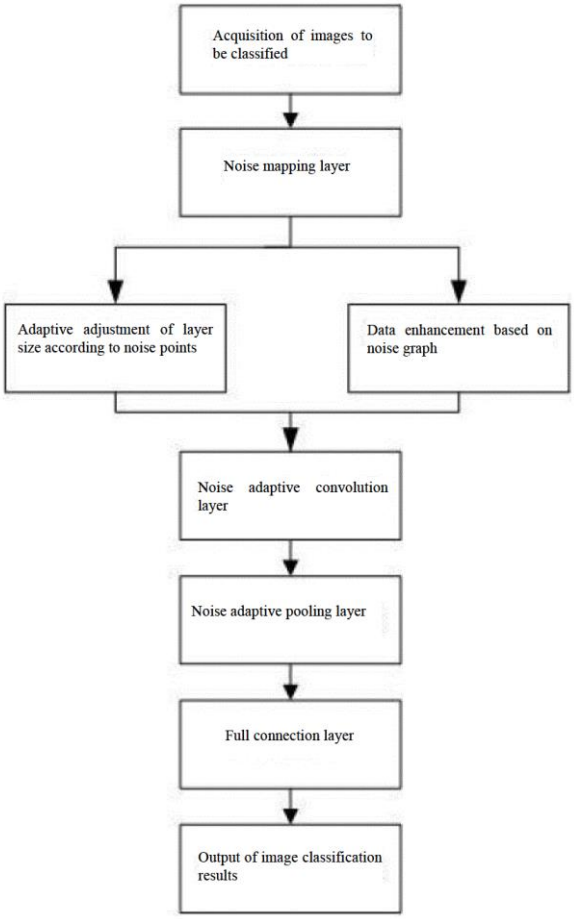

21: 2023/03066. 22: 2023/02/28. 43: 2023/05/09
51: G06T
71: Shihezi University
72: Lei WANG, Qiao LIU, Hongwen ZHANG, Meng WANG, Jing'an FENG, Siyu YAO
54: A CROP EDGE DETECTION METHOD BASED ON FPGA
00: -
The invention discloses a crop edge detection method based on FPGA, which includes the following steps: input the cotton plant image, FPGA parallel computing platform first completes the camera initialization and register configuration, and then reads the real-time image data and stores it in the SDRAM memory after the configuration is completed; The image filtering, image graying and image binarization processing algorithms are implemented in parallel inside the FPGA chip; In the edge detection algorithm module, the gray image is first de-noised and acquired by the adaptive threshold algorithm, and then the eight-direction extended Sobel operator convolution operation is performed to calculate the gradient amplitude value, which is compared with the adaptive threshold, and the edge of the detected image is output; SDRAM chip accesses the extracted edge image, and finally displays the edge image through VGA display. The invention adopts the above crop edge detection method based on FPGA, which can accurately identify the cotton plant edge and prepare for the next cotton plant mechanical topping.

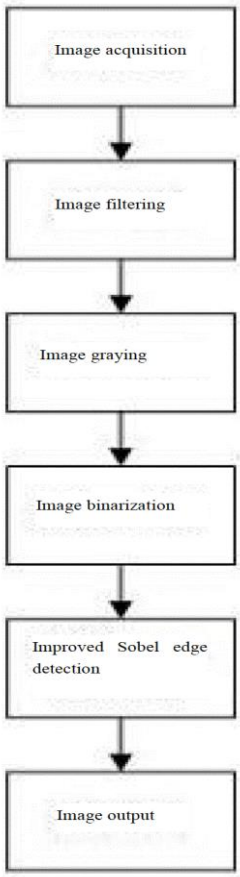

21: 2023/03067. 22: 2023/02/28. 43: 2023/05/09
51: A01D
71: Shihezi University
72: Lei WANG, Qiao LIU, Hongwen ZHANG, Meng WANG, Jing'an FENG, Chenghai YIN
54: A BLOW-SUCTION TYPE COTTON CONVEYING PIPELINE
00: -

The invention discloses a blow-suction type cotton conveying pipeline, which belongs to the technical field of cotton pickers, including a cotton suction device, a limit device, a power device, a collection device and a vibration device. The cotton suction device is arranged on the top of the collection device, the limit device is arranged in the collection device, and the power device and the vibration device are both arranged on the top of the collection device. The power device is arranged on the side of the vibration device and is opposed to the vibration device. The air flow generated by the air pump in the cotton suction device can make the rotary rod and the side rod rotate. The rotation of the rotary rod can prevent the cotton from blocking the cotton suction pipe. At the same time, the impact of the air flow can make the rotary rod rotate, avoid the use of additional drive motors, reduce the number of drive motors, and also reduce the waste of electric energy.

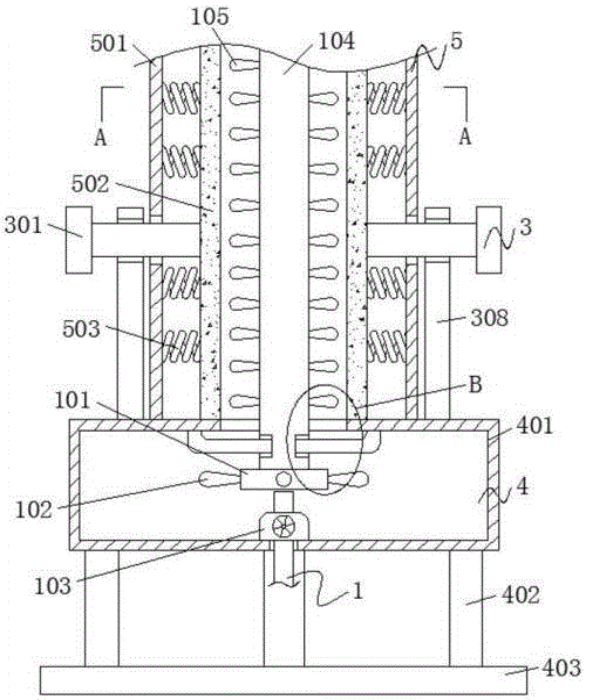

21: 2023/03068. 22: 2023/02/28. 43: 2023/05/09
51: B22C
71: Shenyang University of Technology
72: Lai SONG, Weihua LIU, Tongyu LIU
54: A PREPARATION METHOD OF ALCOHOL-BASED THERMOSETED ZINC PHOSPHATE CORE BINDER
00: -

The invention discloses a preparation method of alcohol-based thermoseted zinc phosphate core binder, which comprises the following steps: S1. first add 50-70 portions by weight of phosphoric acid with a concentration of 85% to the reactor, and then slowly add 15-20 portions by weight of zinc oxide; S2. Slowly add 0.2-0.8 portions by weight of calcium hydroxide into the reactor; S3. Slowly add 8-12 portions by weight of ethanol into the reactor; S4. Slowly add 0.5-2.0 portions by weight of dioctyl ester into the reactor; S5. Slowly add 0.5-2.0 portions by weight of silane into the reactor; S6. After the above reaction is completed, stop heating and cool to room temperature. The invention adopts the above preparation method of alcohol-based thermoseted zinc phosphate core binder, which has no toxic and harmful gas emission during production and use, and the core making by using the binder of the invention has high initial strength and 24-hour strength, strong moisture resistance, and can meet the requirements of casting production.

21: 2023/03069. 22: 2023/02/28. 43: 2023/05/09
51: B22C
71: Shenyang University of Technology, Liaoning Purui Technology Co., Ltd.
72: Weihua LIU, Lai SONG, Haolong LIU
54: A PREPARATION METHOD OF A LIQUID CURING AGENT OF PHOSPHATE BINDER
00: -

The invention discloses a preparation method of a liquid curing agent for phosphate binder, which can be applied to molding and core making. Phosphate refers to phosphate binder with aluminum dihydrogen phosphate as the main component. The curing agent consists of two components: component I is aniline, and component II is composed of urea, water, ammonium chloride, silane and tetraethylenepentamine. The hardening rate of sand samples can be adjusted by changing the amount of the two components. The specific process steps are as follows: first mix the curing agent with the original sand, then add the phosphate binder to mix and produce the sand, pour the mixture into the mold and compact the sample, and the sand sample can harden itself at room temperature. The 24-hour tensile strength of the prepared sand sample is more than or equal to 1.0MPa, and the anti-hygroscopicity and

collapsibility are good. The curing agent has a good application prospect because of its simple preparation process and stable chemical properties. The self-hardening process of the invention is conducive to solving the technical problems of poor anti-hygroscopicity of the traditional heat-hardening phosphate sand core, difficulty in quantification in the self-hardening process, and easy to produce dust in sand mixing.

21: 2023/03070. 22: 2023/02/28. 43: 2023/05/09
51: B22C
71: Shenyang University of Technology
72: Lai SONG, Weihua LIU, Tongyu LIU
54: A BINDER AND ITS PREPARATION METHOD
00: -
The invention discloses a binder and its preparation method, including component I polyacrylic acid, component II phosphate and component III silica. The mass percentage of component II phosphate and component III polyacrylic acid is 0~30% based on the mass of component I polyacrylic acid; The mass percentage of component III silicon dioxide and component I polyacrylic acid is 0~50%. Add component I polyacrylic acid to the mixture of component II phosphate, component III silicon dioxide and raw sand, set the core box temperature at 100~250 degrees celcius, heating time is 1~4 min, and mix sand to make core. The invention provides a binder with wide hardening temperature range, high hardening strength and no irritating gas during hardening.

21: 2023/03071. 22: 2023/02/28. 43: 2023/05/09
51: A01K
71: Xinjiang Academy of Agricultural and Reclamation Sciences
72: Guoqing SHI, Pengcheng WAN, Rong DAI, Yucheng LIU, Zhenliang ZHANG, Yang YANG, Jingjing WANG
54: A METHOD FOR INCREASING LAMBING NUMBERS IN SHEEP
00: -
The present invention discloses a method for increasing the number of lambs produced by sheep by detecting the genotype of sheep carrying the FecB gene and crossing sheep carrying the pure FecB gene. the FecB gene is detected by amplifying the genomic DNA of the sheep to be tested using specific primers and reference primers, followed by electrophoretic analysis of the PCR amplification products to determine the genotype of the sheep. . The invention uses one of the methods described above to increase the number of lambs produced by sheep to obtain sheep that can stably inherit the FecB gene and thus increase the number of lambs produced by sheep. Compared with traditional PCR-RFLP and sequencing methods, the method of the present invention is easy to operate, time-consuming, inexpensive, does not require enzymatic digestion, reduces the various effects caused by enzymatic digestion, and is more conducive to promotion.

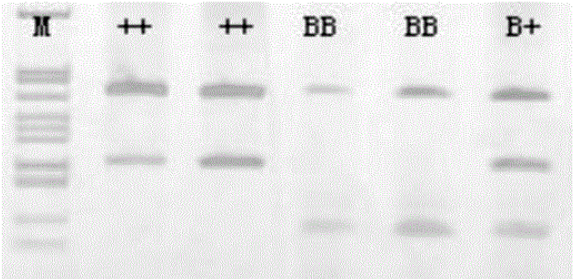

21: 2023/03072. 22: 2023/02/28. 43: 2023/05/09
51: F01N
71: Xinzheng Golden Leaf Industrial Co.,LTD, Henan Zhengda Jiayuan Environmental Technology Co.,LTD, Xinjiang Agricultural University
72: Xinwei ZHOU, Jian HE, Yang NIE, Xiang LI, Baofeng DING, Futang SUN, Hongxia YAN, Ping ZHOU, Dan WANG
54: AN INTEGRATED EQUIPMENT FOR THE PURIFICATION OF ODOROUS EXHAUST GASES FROM LASER PERFORATED AEROSOLS
00: -
The invention discloses a laser perforated aerosol odour purification integrated equipment, including an electrical control system to control all electrical appliances, a high efficiency vortex water washing tower to purify the exhaust gas for the first time, a double high pressure particle purifier connected to the high efficiency vortex water washing tower, a biological purifier connected to the double high pressure particle purifier, and an exhaust system connected to the biological purifier; the high efficiency vortex water washing tower and the double high pressure particle The oil-water separation tank is set up between the high-efficiency

vortex water washing tower and the double high-pressure particle purifier. The invention provides a laser punching aerosol odour purification integrated equipment, using physical-chemical-biological coupling technology can achieve thorough purification of laser punching aerosol odour waste gas, high degree of automation, simple operation, stable operation, safe use, long service life, less water consumption, get waste easy to deal with, no new pollution caused.

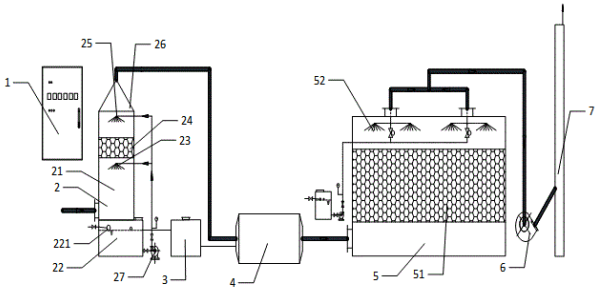

21: 2023/03073. 22: 2023/02/28. 43: 2023/05/09
51: G01M; G01N
71: Hunan Institute Of Traffic Engineering, Hunan Junhangjian Intelligent Technology Co.,LTD
72: Wenxiong XI, Hui WU, Jiang WAN, Rui ZHANG
54: A FULLY FUNCTIONAL MODULAR TEST DEVICE
00: -
The present invention discloses a fully functional modular test device comprising a functional module and a piping system, the functional module comprising a bottom-up arrangement of a base, a loudspeaker section, a gas collection chamber section, a cyclone section, a windowed combustion section and a combustion chamber extension section. The invention uses a fully functional modular test device as described above, where the main functional components can be disassembled and replaced, the test working parameters, sound field conditions and injection position can be flexibly adjusted and flame back transmission can be prevented. The rectangular four-sided windowed combustion chamber is compatible with a variety of advanced optical equipment and facilitates measurement acquisition of combustion diagnostic data.

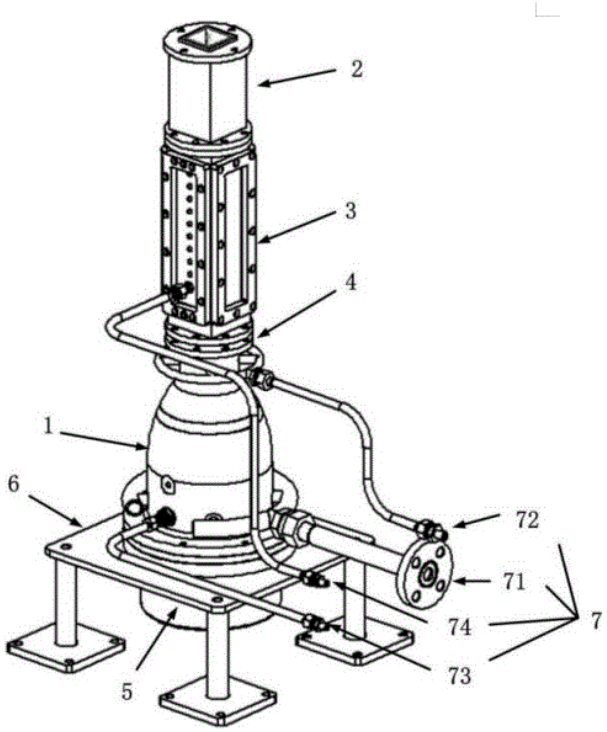

21: 2023/03074. 22: 2023/02/28. 43: 2023/05/09
51: G07C; G06Q
71: Qingdao University of Technology
72: CHENG, Haitao, JIANG, Jinxia, ZHU, Guanyu, LIU, Qinghai
54: IOT-BASED STUDENT MANAGEMENT SYSTEM
00: -
The present invention discloses an IoT-based student management system, including a video surveillance module, a sign-in module, a student terminal, a teacher terminal and a remote server, wherein the video surveillance module, the sign-in module, the student terminal and the teacher terminal are connected to the remote server via the IoT; the video surveillance module is arranged inside a classroom and used to monitor the students' performance in class; the sign-in module is used for students to sign in for class and after class; the remote server is used to store student attendance information and class video; the teacher terminal is used to release academic management information to the student terminal and allows teachers to view the student attendance information and the class video; and the student terminal is used to receive the academic management information. The efficiency of student management is improved.

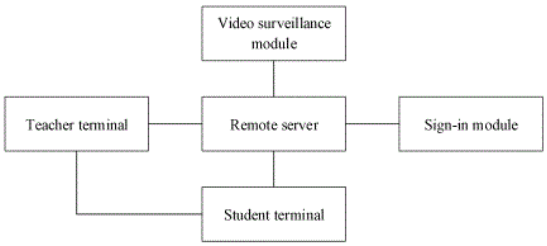

21: 2023/03075. 22: 2023/02/28. 43: 2023/05/09
51: A01C; A01G; A01N; A01P
71: Institute of Highland Forest Science, Chinese Academy of Forestry
72: SHANG, Ruiguang, SU, Jianrong, LI, Shuaifeng, HUANG, Xiaobo, LANG, Xuedong, LIU, Wande, TANG, Hongyan
33: CN 31: 2022102821318 32: 2022-03-21
54: SEEDLING RAISING METHOD FOR PINUS KESIYA
00: -
Disclosed is a seedling raising method for Pinus kesiya. The seedling raising method includes: soaking seeds of the Pinus kesiya in a potassium permanganate solution; spraying water on substrates and then putting the substrates into seedling raising containers, where each substrate includes coconut bran and perlite; spot sowing the pretreated seeds in the seedling raising containers, spot sowing 1-4 pretreated seeds in the seedling raising containers; and spraying a nutrient solution and applying fertilizer after 2-3 weeks of spot sowing the pretreated seeds, spraying the nutrient solution and applying the fertilizer once a week, where the nutrient solution is water and contains MgSO4, K2SO4, Ca(H2PO4)2 and CaSO4, addition amount of the nutrient solution is 9-15 ml, the fertilizer is urea, and initial application amount of the fertilizer is 0.8-1.25 mg. The seedling raising method has the advantage of a short seedling raising period.

21: 2023/03076. 22: 2023/02/28. 43: 2023/05/09
51: A61L
71: Wuhan University of Science and Technology
72: Lin WU, Kun TONG, Ying LIU, Ya HU, Shi HU, Xiaoyu YANG, Yilai ZHOU, Baoguo ZHANG, Zhiyuan LIAO, Ao CHEN, Chang XU, Linghui XIANG, Shicheng RUAN, Jiageng SUN
54: A BACTERIOSTATIC AND ENVIRONMENT FRIENDLY MEDICAL ADHESIVE AND ITS PREPARATION METHOD
00: -
The invention discloses a bacteriostatic and environment friendly medical adhesive and its preparation method. The bacteriostatic and environment friendly medical adhesive includes the following components by weight: 5-10 portions of hydroxypropyl methacrylate, 5-10 portions of tert-butyl methacrylate, 3-5 portions of isopropyl acrylate, 3-5 portions of isobutyl acrylate, 10-20 portions of gelatin, 10-15 portions of glycerol, 2-5 portions of defatted silkworm pupa powder, 10-15 portions of fibrin glue, 5-10 portions of sodium alginate, 2-5 portions of L-glutamic acid and 20-50 portions of deionized water; Weigh the raw materials, add the raw materials into the container, mix them, heat them to 50-70 degrees celcius, stir them until they are completely dissolved, and disinfect them at room temperature for 4-6 hours to obtain bacteriostatic and environment friendly medical adhesive. The preparation method of the invention has the advantages of simple operation, low raw material cost, mild reaction conditions, low energy consumption and strong environmental protection performance. The prepared adhesive has good adhesive tissue effect, high adhesive strength, excellent adhesive durability, low biological toxicity, good bacteriostatic effect and excellent comprehensive performance.

21: 2023/03077. 22: 2023/02/28. 43: 2023/05/09
51: A23L
71: Yanbian University
72: LI, Guanhao, PIAO, Chunxiang, MU, Baide, JU, Ming, WANG, Juan, CUI, Mingxun, LI, Hongmei
54: METHOD FOR MAKING LOW-SODIUM FERMENTED FLAVORED MEAT PRODUCT
00: -
The present invention relates to a method for making a low-sodium fermented flavored meat product, including trimming of raw meat, curing with a curing agent, fermentation, cutting into slices and packaging. In the curing process, the curing agent of the present invention is used for curing at 2-4 degrees Celsius for 3 days; the fermentation treatment is that the meat blocks without being overlapped are hung on a shelf and fermented in a fermentation workshop for 13 days. The fermented meat product prepared by the curing agent of the present invention has a flavor of a finished western-style fermented ham, the color, taste and flavor are

improved, and the sodium content in the finished product is reduced.

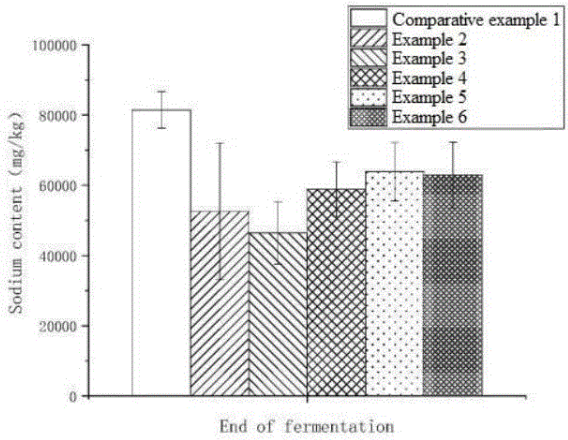

21: 2023/03078. 22: 2023/02/28. 43: 2023/05/10
51: E04B; E04C
71: University of Science and Technology Liaoning
72: WANG, Qingli, GAO, Hangcheng, ZHANG, Yijing, ZHAO, Jie, QIN, Haiyu
54: CONCRETE FILLED CIRCULAR CFRP-STEEL TUBE COLUMN AND REINFORCED CONCRETE BEAM JOINT
00: -
Provided is a concrete filled circular CFRP-steel tube column and reinforced concrete beam joint, including two inter-joint steel tubes, a joint area steel tube, an internal liner, reinforced concrete ring beams and reinforced concrete frame beams, wherein the joint area steel tube is arranged between the two inter-joint steel tubes; the internal liner is inserted into the joint area steel tube, and both ends of the internal liner extend from the joint area steel tube into the inter-joint steel tubes at both sides of the joint; the internal liner is in threaded connection with the two inter-joint steel tubes and the joint area steel tube; shear rings are fixed to the periphery of the joint area steel tube, and first CFRP sheets are laid on the inter-joint steel tubes. The solution is convenient in construction, so that continuous transfer of loads at the joint is guaranteed.

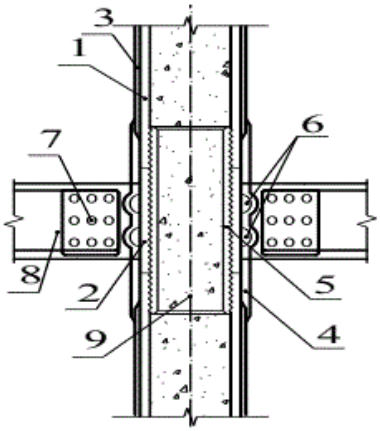

21: 2023/03080. 22: 2023/02/28. 43: 2023/05/10
51: B01D
71: CHENGDU ANJIERUI ENVIRONMENTAL PROTECTION TECHNOLOGY CO., LTD
72: LI, Bo
54: SRR FREE-RADICAL CLUSTER AGENT FOR TREATING VARIOUS MALODOROUS VOCS WASTE GASES
00: -
The present invention belongs to the field of chemistry, and particularly relates to an SRR radical cluster agent for treating various malodorous VOCs waste gases.

21: 2023/03081. 22: 2023/02/28. 43: 2023/05/10
51: B01D
71: CHENGDU ANJIERUI ENVIRONMENTAL PROTECTION TECHNOLOGY CO., LTD
72: LI, Bo
54: SRR FREE-RADICAL CLUSTER AGENT MAINLY FOR TREATING VOCS POLLUTANTS CONTAINING AROMATIC RINGS AND NITROGEN AND USE THEREOF
00: -
The present invention belongs to the field of chemistry, and particularly relates to an SRR free-radical cluster agent mainly for treating VOCs pollutants containing aromatic rings and nitrogen and a use thereof.

21: 2023/03082. 22: 2023/02/28. 43: 2023/05/10
51: E04B
71: University of Science and Technology Liaoning
72: WANG, Qingli, ZHAO, Jie, GAO, Hangcheng, ZHANG, Yijing, QIN, Haiyu
54: CONCRETE FILLED CIRCULAR CFRP-STEEL TUBE COLUMN AND STEEL BEAM JOINT

00: -
Disclosed is a concrete filled circular CFRP-steel tube column and steel beam joint, including inter-joint steel tubes, a joint area steel tube and an internal liner, wherein internal threads are formed in inner walls at both ends of the inter-joint steel tubes and in the inner wall of the joint area steel tube, external threads are formed in the outer wall of the internal liner, the internal liner can be in threaded connection with the inter-joint steel tubes and the joint area steel tube, and the inter-joint steel tubes and the internal liner can be used for concrete placement; reinforcing ring web plates are fixed at the outer wall of the joint area steel tube, and steel ring plates are also fixed at the outer side of the reinforcing ring web plates. The whole joint is simple in structure, convenient and fast in construction, and easy for concrete placement.

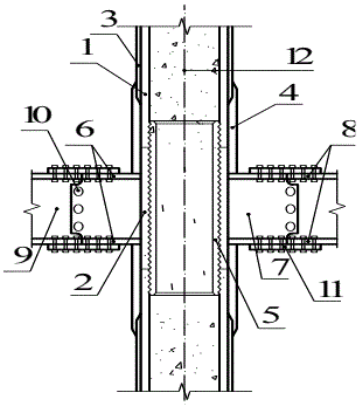

21: 2023/03083. 22: 2023/02/28. 43: 2023/05/10
51: G06F
71: Zhejiang Gongshang University
72: CHEN Chen, HONG Haibo

54: A NON-INVASIVE METHOD TO OFFSET BACKDOOR POISONING ATTACKS

00: -
Nowadays, machine learning is performing very well in the field of computer vision and natural language processing. However, recent research results indicate that machine learning models are extremely vulnerable to various malicious attacks, among which backdoor attacks are favored by attackers because of their easy deployment and high success rate. In fact, the attacker only needs to put a small amount of malicious data in the training dataset, so that the model triggers abnormal behavior under certain circumstances. In this patent, we propose a non-invasive method to repair the backdoor model: Anti-Backdoor Model (ABM), compared to previous invasive defense schemes, ABM is better at removing backdoors and protecting original mission accuracy. Specifically, we mainly exploit the difference between the backdoor task and the original task at low data volume: the backdoor task maintains high accuracy and high activation, while the original task is diametrically opposite. Firstly, we implant a weak backdoor in the model, and leverage the interaction between the (strong) adversarial backdoor and the weak implanted backdoor to isolate a small number of high-concentration poisoned datasets. Secondly, we train the teacher model by using the standard training method. Finally, we take advantage of this low-volume dataset to train an ABM that is only interested in backdoors by means of knowledge distillation to offset the backdoor task in the teacher model.

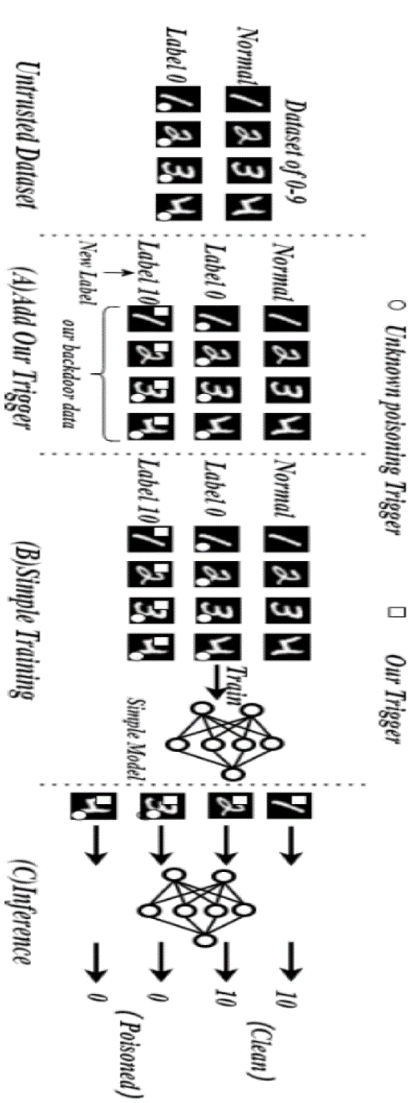

21: 2023/03084. 22: 2023/02/28. 43: 2023/05/10
51: G06F; G06Q
71: Shandong University of Technology
72: Chao YIN, Zhongbo LI

54: METHODOLOGY FOR HAZARD SPATIAL ZONING OF SLOPE DISASTERS

00: -

The invention discloses a methodology for hazard spatial zoning of slope disasters, which includes the following steps: selecting multiple highway slopes, forming monitoring areas, and setting several characteristic points; multiple scanning monitoring; point cloud registration of slope point cloud; the deformation of each slope feature point is calculated by point cloud comparison method. The stability of each highway slope is determined by chromatographic analysis. Analyze the field investigation to clarify the characteristic data of each highway slope; establish a database; secondary programming development is carried out to calculate the risk probability of highway slope in monitoring area. Draw the risk zoning map of highway slope disaster in monitoring area. The invention adopts the above-mentioned methodology for hazard spatial zoning of slope disasters, which can reflect the mutual feedback mechanism between highway slope disaster and disaster-pregnant environment, reveal the internal mechanism of disaster occurrence, and provide theoretical basis for disaster prevention policy formulation and disaster prevention fund allocation.

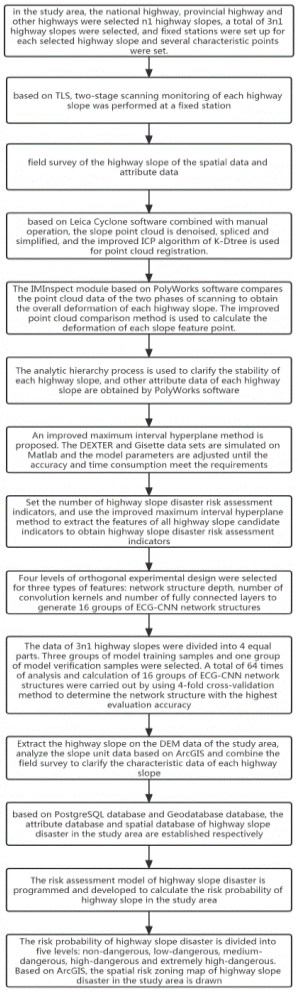

21: 2023/03085. 22: 2023/02/28. 43: 2023/05/10
51: A01G; E02D
71: Kunming University of Science and Technology
72: HUANG, Jianhong, LIN, Yichao, DONG, Zejing, TIAN, Senlin, HU, Xuewei, ZHAO, Qun

54: METHODS FOR MAKING AND USING ECOLOGICAL REMEDIATION PLANTING BAGS IN HIGH-COLD HIGH-ALTITUDE AREA

00: -

Disclosed are methods for making and using ecological remediation planting bags in a high-cold and high-altitude area. The method for making ecological remediation planting bags includes a filling step and a grass seed implanting step. The method for using ecological remediation planting bags includes a field digging step, a planting bag putting step and a field maintaining step. Materials selected in the present invention feature wide source and low price, so the cost problem of project implementation can be effectively reduced, and popularization and application in later period are facilitated. Waste rocks in the planting bags are capable of increasing gaps in cultivated materials to ensure that root systems of plants can extend normally, thereby guaranteeing growth of plants in later period. Compared with other materials with same functions, the price of the waste rocks is extremely low.

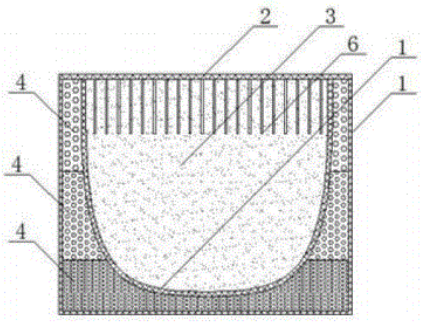

21: 2023/03086. 22: 2023/02/28. 43: 2023/05/10
51: C12Q
71: Henan Agricultural University
72: Li Hong, Cao Yuzhu, Liu Xiaojun, Jia Qihui, Xing Yuxin, Xia Tian, Zhang Yanhua, Li Donghua, Gong Yujie, Tian Yadong, Li Zhuanjian, Jiang Ruirui, Li Wenting, Sun Guirong, Li Guoxi, Kang Xiangtao, Han Ruili
33: CN 31: 202310056768X 32: 2023-01-13

54: A SNP MOLECULAR MARKER IN CHICKEN NCAPG GENE, AND ITS DETECTION PRIMER, KIT, BREEDING METHOD AND APPLICATION

00: -

According to the invention, through research, it is found that a SNP site rs75790569 on the intron 18 in the chicken NCAPG gene has a mutation of A>G. Through analysis and verification, the SNP molecular marker is significantly associated with chicken growth traits, carcass traits and body size traits, and can be used as a molecular marker for genetic improvement of chicken breeds. Using this molecular marker to breed chickens is beneficial to improve the growth traits and/or carcass traits and/or body size traits of chicken populations. The invention also provides a detection primer and a kit for detecting the SNP molecular marker in the chicken NCAPG gene, and an improved breeding method for chicken growth traits and/or carcass traits and/or body size traits, which can be used for auxiliary selection and molecular breeding of chickens and plays an important role in improving the growth traits and/or carcass traits and/or body size traits of chickens.

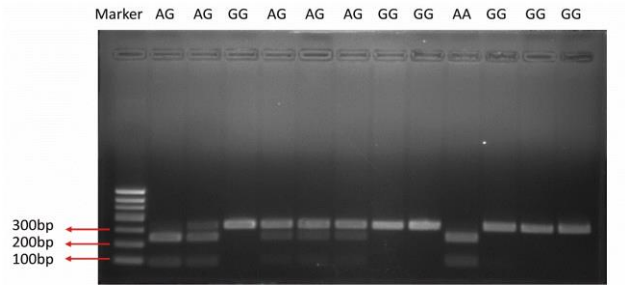

21: 2023/03087. 22: 2023/02/28. 43: 2023/05/10
51: C12N
71: Institute of Plant Protection, Henan Academy of Agricultural Sciences
72: LI, Tong, JIANG, Yueli, XU, Yongwei, GONG, Zhongjun, WU, Yuqing, MIAO, Jin, DUAN, Yun, LU, Ruijie
33: CN 31: 2022104726360 32: 2022-04-29

54: APPLICATION OF APHID DENSOVIRUS SMDV-YUANYANG IN APHID CONTROL

00: -

The present invention provides application of aphid densovirus SmDV-Yuanyang in aphid control, which belongs to the technical field of biocontrol viruses. The present invention identifies a novel aphid densovirus strain from a Sitobion miscanthi population, by means of complete genome sequencing, genome structure analysis and phylogenetic tree construction, the virus isolated in the present invention is identified as Ambidensovirus, and a preservation number is CCTCC NO:V202231. An aphid transfection test shows that the infection of Sitobion miscanthi densovirus can significantly reduce fitness (total

young aphid numbers and life span) of the Sitobion miscanthi, and can be spread by means of wheat seedlings. Sitobion miscanthi densovirus is a novel potential biocontrol resource for aphid, which provides a new idea for aphid control pesticide.

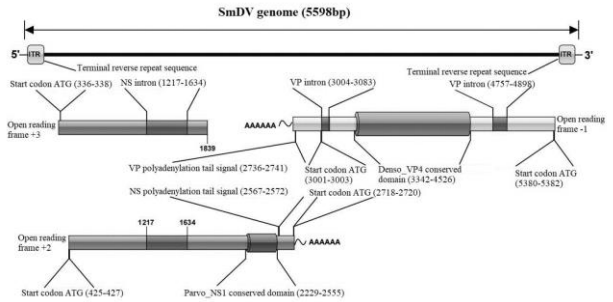

21: 2023/03093. 22: 2023/02/28. 43: 2023/05/09
51: G01N; G09B
71: University of Science and Technology Beijing
72: Peng LI, Yu WANG, Shengjun MIAO, Fenhua REN, Zhihong DONG
33: CN 31: 202211386566.3 32: 2022-11-07
54: A TEST SYSTEM AND METHOD FOR SIMULATING FREEZE-THAW ACTIVATION CATASTROPHES ON MINING FAULTS IN COLD REGIONS
00: -
The present invention discloses a test system for simulating freeze-thaw activation catastrophe of mining faults in cold regions, comprising a control device, a freeze-thaw environment box, a shaking table, a model box, and a physical model of slope-like materials; the physical model of slope-like materials is embedded with a horizontal optical fibre monitoring mechanism, a vertical optical fibre monitoring mechanism and a supplementary sensor mechanism electrically connected to the control device, the physical model of slope-like materials is placed inside the model box, the model box is placed inside the shaking table, the shaking table is set inside the freeze-thaw environment box, and the shaking table and the shaking table are electrically connected to the control device. The physical model of the slope similar material is placed in a model box, the model box is placed on a shaking table, the shaking table is set in a freeze-thaw environment box, the shaking table and the freeze-thaw environment box are electrically connected to the control device. A test method based on the above system is also disclosed, which enables the loading of freeze-thaw cycles and engineering disturbances to simulate the activation of faults and induce slope instability under the coupling effect of freeze-thaw cycles and blasting and seismic wave disturbances in opencast mines at high altitude and alpine regions, and to comprehensively monitor the displacement field, stress field, temperature field, and pore water pressure field during the slope instability process.

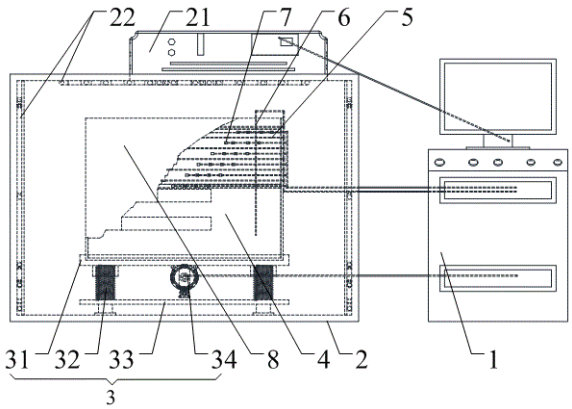

21: 2023/03094. 22: 2023/02/28. 43: 2023/05/09
51: B22D
71: Shihezi University
72: Lei WANG, Qiao LIU, Hongwen ZHANG, Meng WANG, Jing'an FENG, Chenghai YIN
54: A PORTABLE INGOT PICKING MECHANISM
00: -
The invention discloses a portable spindle picking mechanism, relating to the technical field of cotton picking, comprising a spindle picking rod and a heat shrinkable wear sleeve, the heat shrinkable wear sleeve covering the circumference of one end of the spindle picking rod, a metal ball mounted on one end of the rod, two rows of hook teeth mounted on the circumference of one end of the rod, a fixing plate mounted between the two rows of hook teeth, the fixing plate using a snap connection to one end of the roller bearing, the other end of the roller bearing mounted on the end of the spindle picking device The other end of the roller bearing is fitted with one end of the housing of the de-cottoning device and the other end of the housing of the de-cottoning device is fitted with a spindle picking gear. The invention by setting the cotton removal device, can be timely cotton from the front end of the picking spindle off, can reduce the heat generated when picking spindle work, reduce the work of cotton

picking bring safety hazards, the use of high efficiency, the invention by setting the rolling bearing, long service life, low wear, reduce the requirements of lubricating oil, reduce the loss of picking spindle, save the operating costs of the cotton picking machine, improve the effect of cotton picking, improve economic efficiency.

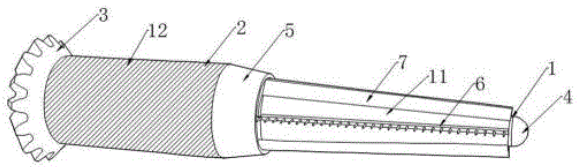

21: 2023/03095. 22: 2023/02/28. 43: 2023/05/09
51: B66F; G06Q
71: Anhui Polytechnic University
72: Yu CHEN, Ce GUO, Yu ZHU, Mengchen LU, Qingyang MENG, Yan ZHOU, Minghui ZHU, Mingshan JIANG, Pan GE, Sihan CHEN
54: AN INTELLIGENT PARKING GARAGE
00: -
The invention discloses an intelligent parking garage, including a multi-storey parking platform, the parking platform is provided with a mounting slot and a sliding slot, the sliding slot is opened symmetrically on both sides of the mounting slot, the parking platform is provided with a rack and a motor; it also includes a lifting mechanism, a translating mechanism and a carrying mechanism, the lifting mechanism moves in a vertical direction and runs through the multi-storey parking platform, the translating mechanism includes a car carrying plate, a pulley is provided under the car carrying plate, a gravity sensor is provided on the car carrying plate, an electromagnet is provided under the translating mechanism, the electromagnet is energized and absorbed by the rack, the translating mechanism is provided with a plurality, the translating mechanism moves and is set on the parking platform. There is a gravity sensor, an electromagnet is provided below the translation mechanism, the electromagnet is energized and absorbed with the rack, there are multiple translation mechanisms, and the translation mechanism is moved and set on the parking platform. The present invention uses the above-mentioned kind of intelligent parking garage, only requires the vehicle owner to drive the vehicle into or out of the parking garage, high degree of automation, and the multi-layer design makes full use of the vertical space, and the plurality of moving mechanisms can be reasonably arranged in accordance with the reserved parking garage construction space.

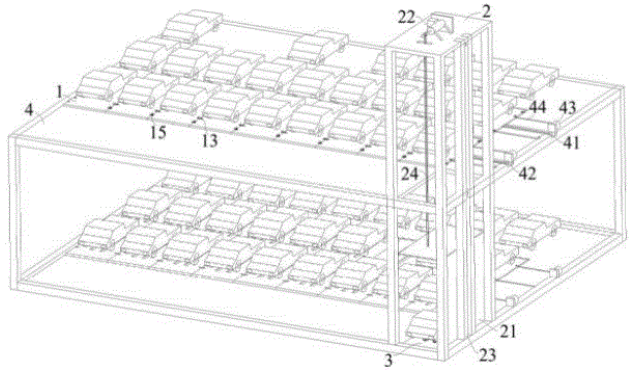

21: 2023/03096. 22: 2023/02/28. 43: 2023/05/09
51: G06F
71: Anhui Polytechnic University, Wuhu HIT Robot Technology Research Institute Co., LTD, Harbin Institute of Technology Wuhu Robot Technology Research Institute
72: Manman XU, Xueming LI, Wenqing ZHANG, Zhen ZHANG, Yongming LIU, Chuqing CAO, Yili FU, Jie WANG, Zhebin ZHANG
33: CN 31: 202222161499.7 32: 2022-08-17
54: A WEARABLE FINGERTIP FORCE HAPTIC FEEDBACK DEVICE
00: -
This patent relates to the field of remote or virtual scene environment interaction, specifically a wearable fingertip force haptic feedback device comprising a helm compartment as a carrier, further comprising: a drive module for providing a power source for the entire device; a drive module that transmits the power source from the drive module to the terminal and serves to transmit power; a haptic display module that serves to provide haptic feedback, with a dot matrix for local appearance reproduction of The squeeze block squeezes the finger downwards to improve the contact pressure feedback; the wear module, which presents the 3D shape of the virtual object using a spring-loaded pin while adding a squeeze structure that can move up and down to provide contact pressure feedback; the ability to provide two haptic modes of presentation, either presenting the 3D shape of the object using the spring-loaded pin alone, or presenting the 3D shape of the object while providing contact pressure feedback.

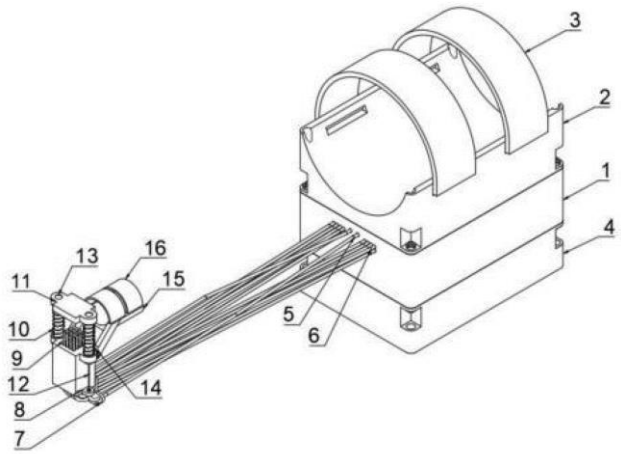

21: 2023/03097. 22: 2023/02/28. 43: 2023/05/09
51: E01H
71: Anhui Polytechnic University
72: Yu CHEN, Qingyang MENG, Yingjuan YANG, Mengchen LU, Ce GUO, Minghui ZHU, Yan ZHOU, Jian WANG, Haomiao ZHOU, Li LIU, Diyu GONG

54: AN ICE BREAKING SNOWPLOW WITH ACTIVE OBSTACLE AVOIDANCE

00: -

The invention discloses an ice breaking snowplow with active obstacle avoidance, which comprises a vehicle body, a lifting mechanism, a snow shovel and an obstacle avoidance mechanism. The bottom of the vehicle body is successively provided with an ice breaking roller and a cleaning roller from front to rear. The front side of the vehicle body is provided with a front connecting plate. The rear side of the front connecting plate is fixed with a removable connecting plate. The removable connecting plate is connected with the vehicle body through bolts, The front connecting plate of the vehicle is connected with a regulating plate through a lifting mechanism, and the obstacle avoidance mechanism is arranged between the snow shovel and the regulating plate; The regulating board comprises a regulating main board and a regulating auxiliary board, and the regulating main board is arranged in front of the regulating auxiliary board. The present invention adopts the above-mentioned active obstacle avoidance ice-breaker to realize active buffering and obstacle avoidance, which can achieve a high obstacle clearance height, low requirements for the environment, and a wide range of applications. The cutting of compacted ice and snow on the road is fast and effective.

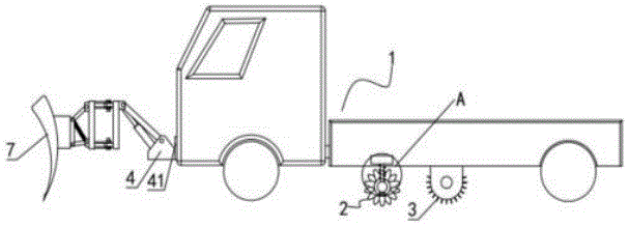

21: 2023/03098. 22: 2023/02/28. 43: 2023/05/09
51: A61H
71: Anhui Polytechnic University, Wuchang Shouyi University
72: Zhen ZHANG, Lin LIN, Anheng WANG, Ming FANG, Manman XU

54: A FINGER REHABILITATION TRAINER WITH A HIGH DEGREE OF ADAPTABILITY

00: -

The present invention discloses a finger rehabilitation trainer with a high degree of adaptability, comprising a base and a projection and a finger fixation part provided on the base; the first end of the finger fixation part is hingedly connected to the base, and the second end of the finger fixation part is a free end; an inner cavity is provided in the base, and a drive member and a controller are provided in the inner cavity; a through hole is provided on the surface of the base; the output end of the drive member passes through the through hole and is connected to the finger fixation part. The present invention adopts a finger rehabilitation trainer with a high degree of adaptability as described above, which can achieve finger rehabilitation training without changing the user's hand shape, and therefore does not cause damage to the user's hand, and the user has a better experience of using it.

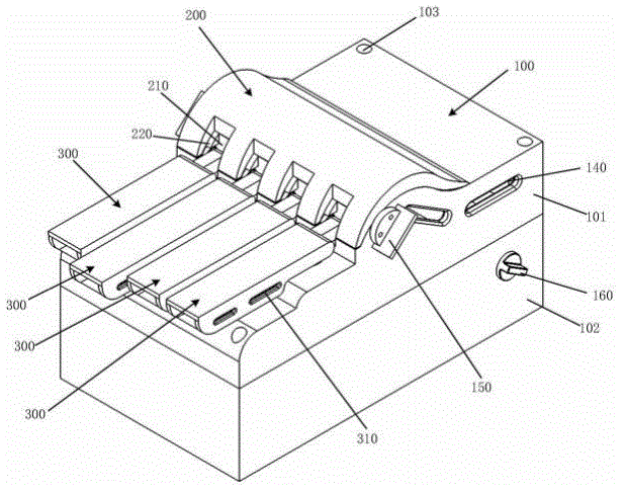

21: 2023/03099. 22: 2023/02/28. 43: 2023/05/09
51: G01V
71: Anhui Polytechnic University
72: Anheng WANG, Zhen ZHANG, Ming FANG, Jincao CAI, Huaiyang WANG, Manman XU
54: A HIGH-ACCURACY CALIBRATION DEVICE AND ITS CALIBRATION CALIBRATION METHOD
00: -
The present invention discloses a high accuracy calibration device and its calibration calibration method, comprising a calibration magnet, a calibration tool, an upper computer, a SENIS Gauss meter connected to the upper computer and a nuclear magnetic resonance instrument;; the calibration tool is provided with an NMR probe, the front and rear sides of the NMR probe are adjacent to each other with a Hall probe, and the Hall probe is immediately attached to a thermoelectric semiconductor cooler; the NMR probe is connected to the nuclear magnetic resonance instrument, and the Hall The NMR probe is connected to the NMR instrument and the Hall probe is connected to the SENIS Gaussmeter one after the other. The present invention uses a highly accurate calibration device and its calibration method to achieve simultaneous calibration of multiple Hall sensors, effectively improving calibration efficiency and calibration reliability; and the sensitive zone marks of the NMR probe and Hall probe are parallel to each other, which can effectively ensure the accuracy of calibration data.

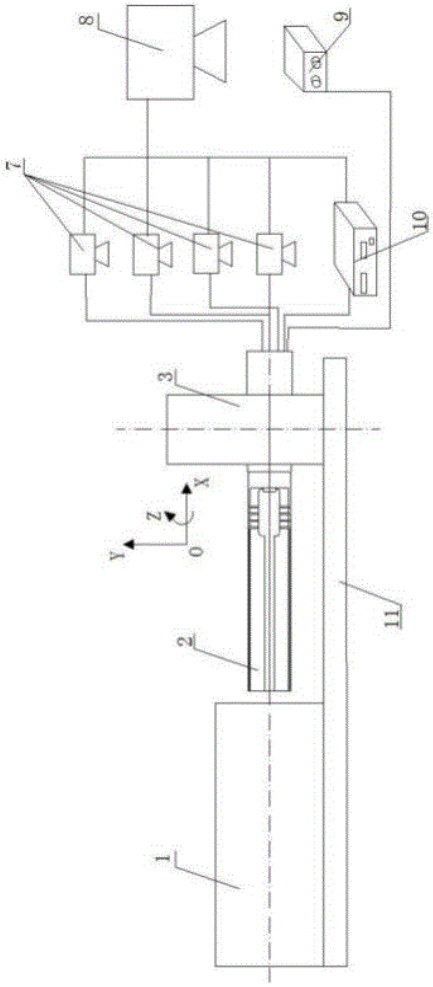

21: 2023/03100. 22: 2023/02/28. 43: 2023/05/09
51: F01N
71: Anhui Polytechnic University
72: Anheng WANG, Zhen ZHANG, Ming FANG, Huaiyang WANG, Jincao CAI, Manman XU
54: A GRADED COMPOSITE LAMPBLACKTREATMENT EQUIPMENT
00: -
The invention discloses a graded composite grease treatment equipment, by setting up windproof air collection panels, so that the air inlet system can still work effectively in the presence of natural wind, by setting up independent air inlet channels and air separating baffles, so that each air inlet channel acts separately to ensure the optimal use of energy, by setting up inertial dust removal chamber, Rafal tube spray treatment chamber and wetting slag treatment chamber, grease gas is firstly adsorbed in the inertial The sooty gas is firstly adsorbed in the inertial dust removal chamber, then the sooty gas is further cleaned by using the accelerating and

depressurising effect of the Rafal tube on the gas, and finally the remaining small sooty particles in the flowing gas stream are further absorbed and filtered through the slag body and some of the harmful gases in the soot are absorbed. The present invention uses the above structure of a graded composite soot treatment equipment, after the three-stage treatment system, to improve the efficiency of grease removal, and easy to use, low operating costs, to meet the social development of energy saving and emission reduction equipment needs.

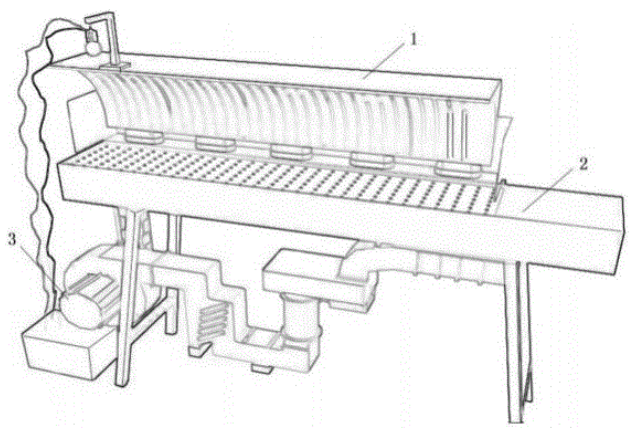

21: 2023/03101. 22: 2023/02/28. 43: 2023/05/09
51: E01D; F16C
71: Hebei University of Science And Technology, Hebei Expressway Group Limited Yanchong Management Centre, Hebei Jiaming New Material Technology Co.
72: Zhigang JIANG, Quansheng ZHAO, Yingfei ZHAO, Weidong WANG, Hongtao XU, Shengshen GE, Mingguo LIU, Xudong LI, Li ZHOU

54: A DURABLE BASIN TYPE SPHERICAL STEEL BEARING

00: -

The invention discloses a durable basin type spherical steel support, including a top plate, a piston, a ball crown and a steel basin seat plate; the top plate is located in the upper part of the piston; the bottom of the piston is matched with the top of the ball crown and rotatingly connected, the lower part of the piston and the whole of the ball crown are set in the steel basin seat plate, the steel basin seat plate is provided with a mounting slot, the internal side walls of the mounting slot are provided with a gap between them, the bottom surface of the mounting slot is provided with a curved slide plate, the curved slide plate is a curved body matching the piston and the ball crown; the bottom surface of the mounting slot is provided with a lower plane slide plate. The curved plate is a curved plate matching the piston and the ball crown; the bottom surface of the mounting slot is provided with a lower plane slide. The present invention adopts a durable basin type ball steel bearing as described above, which is functional, well stressed, light weight and more durable, and improves the performance index of the ball steel bearing, which can be better applied to take up beams and piers.

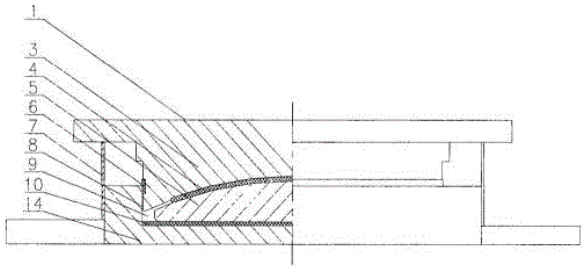

21: 2023/03102. 22: 2023/02/28. 43: 2023/05/10
51: G01N
71: Hebei GEO University
72: Xiuling CAO, Muci YUE, Yonghua JIA, Yuzhang WANG, Zhiqiang ZHA, Huige WU, Haiyan XU, Aijun YAO, Qingqian MENG

54: AN UNDERGROUND SPACE DETECTING SAMPLER

00: -

This invention discloses an underground space detecting sampler, including a base. The base is equipped with a regulating device, a detection device and a sampling device. The regulating device is fixedly connected to the upper middle of the controller. The controller is fixedly connected to the right side of the upper end of the base. The detection device is fixedly connected to the upper end of the regulating device. The sampling device is connected to the upper part of the fixed frame, and the fixed frame is fixedly connected to the upper left side of the base. The invention adopts the above-mentioned underground space detecting sampler, which is small in size and easy to transport. The adjustment device and detection device are set to ensure the detection effect. By setting the sampling device, the rapid sampling of the sampling cylinder is realized, the sampling effect of the equipment is strengthened, the sampling efficiency of the equipment is improved, and the equipment is small in size and easy to transport.

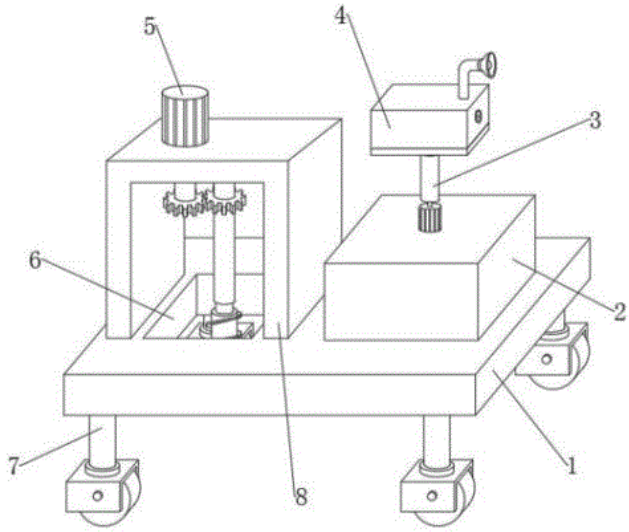

21: 2023/03103. 22: 2023/02/28. 43: 2023/05/10
51: E04D; F25B
71: Hebei GEO University
72: Xiuling CAO, Muci YUE, Jianming LI, Ying YUAN, Yuzhang WANG, Haiyan XU, Yonghua JIA, Huige WU, Yongkang HOU, Xiaohui JIA, Qingqian MENG

54: A GREEN ENERGY-SAVING ASSEMBLED ROOF WITH GOOD COOLING EFFECT

00: -

This invention discloses a green energy-saving assembled roof with good cooling effect is characterized by including a roof load-bearing structure. The upper surface of the roof load-bearing structure is paved with a roof assembly plate. The roof load-bearing structure is equipped with a roof ventilation unit, and the outer edge of the roof ventilation unit is paved with a rainwater collection unit. The top cover ventilation unit includes an inner top cover, and an outer top cover is arranged above the inner top cover. The outer surface of the outer top cover is installed with a solar power generation board. The invention adopts a green energy-saving assembled roof with good cooling effect, which can realize overhead ventilation of the roof, convenient installation, and good cooling and energy-saving effect.

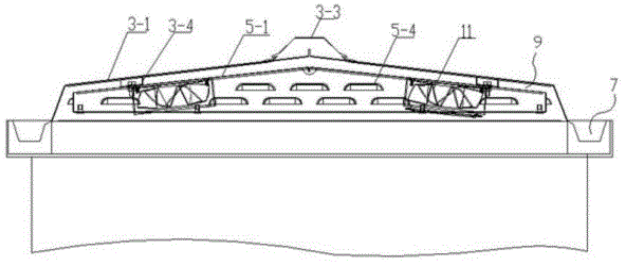

21: 2023/03104. 22: 2023/02/28. 43: 2023/05/10
51: H02K
71: Anhui Polytechnic University, Wuhu Magnetic Wheel Transmission Technology Co.LTD
72: Manman XU, Xiangdong WANG, Yimin LU, Huaiyang WANG, Aike WANG, Zhen ZHANG, Zhebin ZHANG, Jie WANG, Siqi CHEN
33: CN 31: 2023202888089 32: 2023-02-17

54: A PERMANENT MAGNET GOVERNOR WITH A REMOVABLE HEAT SINK STRUCTURE

00: -

The invention relates to a permanent magnet governor with a removable heat sink, comprising a metal housing, said metal housing is connected to a permanent magnet governor, said metal housing is provided with a heat sink for air cooling the permanent magnet governor; said metal housing is provided with a water pump on one side, said water pump is connected to a pipeline, said metal housing is provided with a water vapour generating curtain for cooling the air entering the metal housing in conjunction with the pipeline. wet curtain. The blades are set in an inverse parabolic pattern and are equally spaced, while the installation angle of the blades is at a positive angle to the corresponding cross-flow fan diameter, with the cooperation of the baffle plate to achieve a single channel airflow in and out of the cooling mode

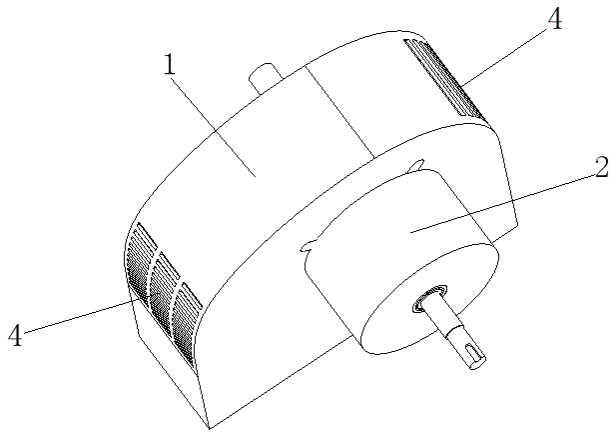

21: 2023/03105. 22: 2023/02/28. 43: 2023/05/10
51: G01N
71: National Institutes for Food and Drug Control
72: ZHANG, Ping, WEI, Feng, MA, Shuangcheng, KANG, Shuai, LI, Juan, LU, Tulin
54: METHOD FOR IDENTIFYING SEQUENCES OF SIGNATURE PEPTIDES OF CORDYCEPS SINENSIS AND FERMENTED CORDYCEPS PREPARATIONS
00: -
Disclosed is a method for identifying sequences of signature peptides of Cordyceps sinensis and fermented Cordyceps preparations. The method includes performing extraction and enzymolysis on fungal proteins of the Cordyceps sinensis and the fermented Cordyceps preparations, and performing liquid chromatography with tandem mass spectrometry (LC-MS-MS) analysis on enzymolysis peptides; performing data analysis; and screening signature ions , searching in a protein database according to secondary mass spectra of the signature peptides of the Cordyceps samples, to identify the sequences of the signature peptides, and further to establish a signature peptide identification database of the Cordyceps sinensis and the fermented Cordyceps preparations. According to the present invention, qualitative analysis can be performed only according to primary mass spectrometry information and secondary mass spectrometry information of the signature peptides of the Cordyceps sinensis and the fermented Cordyceps samples without using a monomer reference substance as a control.

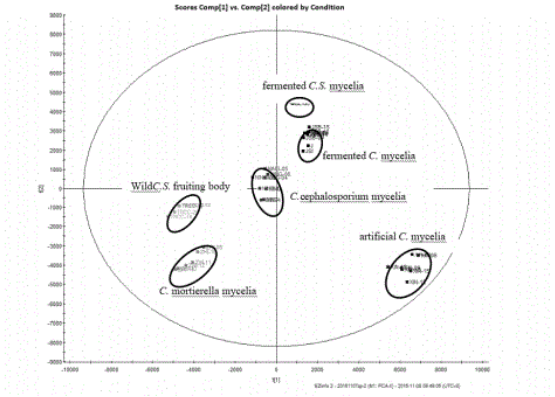

21: 2023/03108. 22: 2023/02/28. 43: 2023/05/03
51: B01F
71: Shandong Meiguolai Food Co.
72: Haoran LIU, Zhaoxiang HAO, Guanghao LIU, Guangliang LIU, Ronghua WANG, Xuegui WANG, Bo ZHANG, Shuai WANG, Xue LI, Haihua WANG
54: A BLENDING DEVICE
00: -
The invention discloses a blending device, comprising a base for positioning and fixing the tank body, said top of the base is opened with a placing slot, said top of the placing slot is symmetrically fixed connected with a positioning shaft near the side wall position, for fixing the position of the tank body at the top, said inner top centre of the base is fixedly connected with a motor, said end face of the driving shaft of the motor is fixedly connected with a connecting block, through The motor drive shaft drives the rotation of the connecting block, thus driving the rotation of the rotating block, and said base is provided with a tank at the top for the temporary storage of the juice inside. The invention by the blending tank and the base for the connection, so that in the blending tank in the juice for quick access, while in the base and the internal blending tank for the connection, so that the blending tank internal stirring, so that the juice in the blending mix fully.

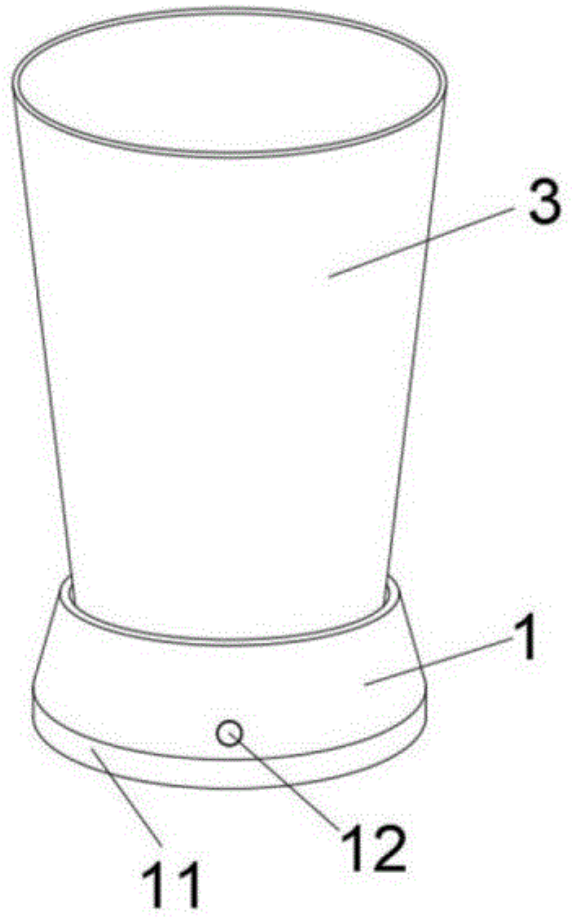

21: 2023/03109. 22: 2023/02/28. 43: 2023/05/03
51: G01N
71: Hangzhou Apogee Tech Co., Ltd.
72: Ming Ge, Jingxue Shen, Jiang Wei, Bo Hu, Shuangfei Liu
54: CONFIGURABLE INTELLIGENT VISUAL DETECTION SYSTEM AND METHOD BASED ON STANDARD INDUSTRIAL CAMERA
00: -
The invention relates to a configurable intelligent visual detection system and method based on a standard industrial camera. According to the technical scheme of the invention, the system comprises appositive light source which is used for irradiating the front surface of a detected product at a detection position, a plurality of groups of side light sources which are used for irradiating the front surface of the detected product at the detection position at a plurality of different angles, an RGB three-color light source which is used for irradiating the front surface of the detected product at the detection position by using red, green and blue single-color light sources respectively, a backlight source which is used for irradiating the back surface of the detected product at the detection position, a light source stroboscopic controller which is used for controlling the front light source, the side light source, the RGB three-color light source and the backlight source to be sequentially lightened according to a specific high-speed frequency and a certain sequence, a standard industrial monochromatic camera which is used for acquiring a black-and-white image of the front surface of the detected product irradiated by the light source when the light source is lightened, and a processor which is connected with the light source stroboscopic controller and the standard industrial monochromatic camera. The system and the method are suitable for the field of product detection in the industrial production process.

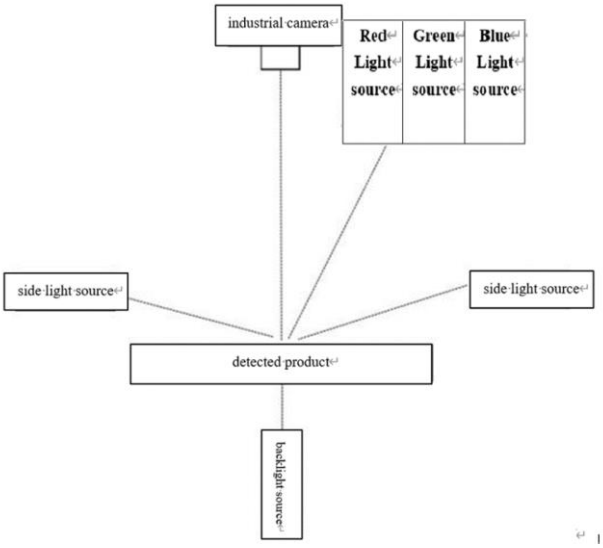

21: 2023/03110. 22: 2023/02/28. 43: 2023/05/08
51: G01N
71: Taiyuan University of Technology
72: Yanru XUE, Xiaogang WU, Songyuan WANG, Hao ZHONG, Yang YAN, Yuqin SUN, Zhipeng GAO, Quanyou ZHANG, Hongmei GUO, Kai ZHANG, Xiaobin WANG, Yongwang ZHAO, Yanqin WANG, Pengcui LI, Yingze QIN, Xiaochun WEI, Weiyi CHEN
54: DEVICE AND METHOD FOR TESTING THE SLIDING PROPERTIES OF BIOLOGICAL SOFT TISSUES
00: -
The present invention discloses a device and method for testing the sliding properties of biological soft tissue, comprising a slide rail, an elastometer, a

displacement sensor, a carrier table and a motor, the carrier table is provided with a recess in which a test specimen is placed, the elastometer is slidingly connected to the slide rail, the indenter at the lower end of the elastometer is provided with a test specimen, and the displacement sensor is provided above the indenter. The invention uses the above-mentioned device and method for testing the sliding properties of biological soft tissue, which can test the sliding contact stiffness of the specimen when a scratch is produced, and has potential application in the field of biological soft tissue materials and engineering soft material materials.

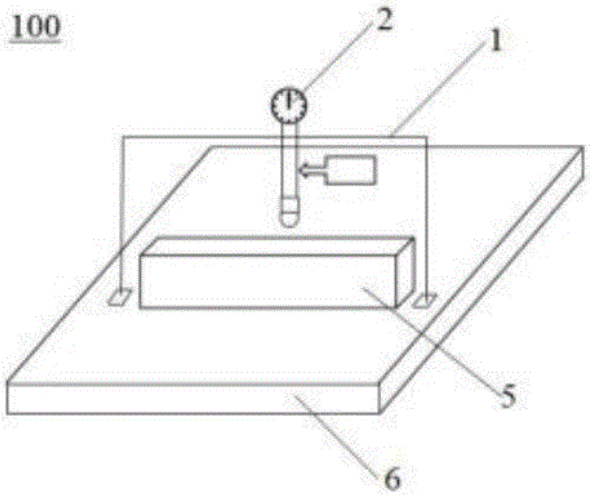

21: 2023/03111. 22: 2023/02/28. 43: 2023/05/03
51: C09J
71: Taiyuan University of Technology, Zhejiang University, Shanxi-Zheda Institute of Advanced Materials and Chemical Engineering
72: Xiaohong LIANG, Yan WANG, Wenwen YU, Yanan YE, Min ZUO, Lan JIA, Heng ZHANG
33: CN 31: 2023101508513 32: 2023-02-22
54: AN EPOXY RESIN-BASED ADHESIVE FOR CERAMIC CULTURAL RELICS RESTORATION, ITS PREPARATION METHOD AND APPLICATION
00: -
The invention discloses an epoxy resin-based adhesive for ceramic cultural relics restoration, its preparation method, and application, which belongs to the field of cultural relics protection and restoration technology. The specific technical solution is as follows: the adhesive is composed of component A and component B. Component A includes the following weight portions: epoxy resin of 52~68 portions, diluent of 2~8 portions, defoamer of 0.35~1 portions, toughening agent of 3.5~15 portions; the B component includes the following weight portions: amine curing agent of 18-25 portions, curing accelerator of 0-5 portions; the preparation method is as follows: Component A and component B are prepared respectively, mixed evenly, and defoamed in vacuum to obtain an epoxy resin adhesive. The prepared adhesive has the characteristics of high transparency, excellent weather resistance, and high bonding strength. The epoxy resin adhesive prepared by the invention can be cured at room temperature, with high transparency and excellent bonding repair effect, which greatly improves the weather resistance of the adhesive and greatly prolongs its yellowing time.

21: 2023/03112. 22: 2023/02/28. 43: 2023/05/03
51: C22C
71: Taiyuan University of Technology
72: Weili CHENG, Lin LUO, Hang LI, Zhenyu GUO, Hongxia WANG, Lifei WANG, Zeqin CUI
33: CN 31: 2022106509185 32: 2022-06-09
54: AN MG-BI-SN ALLOY WITH LOW ALLOYING, HIGH STRENGTH AND TOUGHNESS AND ITS PROCESSING METHOD
00: -
The invention discloses an Mg-Bi-Sn alloy with low alloying, high strength, and toughness, which relates to alloy processing technology. The invention uses magnesium, bismuth, and tin as raw materials, through smelting casting, solid solution treatment, and low-temperature extrusion, an Mg-Bi-Sn alloy with low alloying, high strength, and toughness is obtained. The grain boundary of the Mg-Bi-Sn alloy greatly increases the strength of the magnesium alloy by hindering the dislocation movement. At the same time, the activation of the <c+a> dislocation greatly improves the toughness of magnesium alloys. Compared with rare earth magnesium alloy and complex, expensive ductile deformation technology, the invention has the advantages of low cost, simple and short process, which makes it have certain economic benefits and application potential.

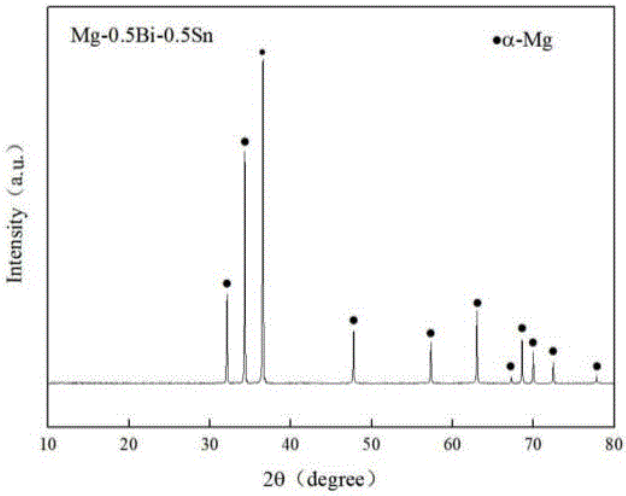

21: 2023/03113. 22: 2023/02/28. 43: 2023/05/03
51: A23L
71: Jiangxi Normal University
72: Jinlin LI, Zongcai TU, Yiyong LUO, Hui WANG, Lu ZHANG, Qiao DING, Xiaomei SHA, Jun LIU, Sijie XU, Yingfei FU, Jiayao LIANG
33: CN 31: 2022102263913 32: 2022-03-09
54: A MICROBIAL PROCESSING METHOD FOR IMPROVING THE NUTRIENT CONTENT OF SHRIMP GILL SAUCE
00: -
The invention discloses a microbial processing method for improving the nutrient content of shrimp gill sauce, with the following steps: S1. Remove the shell of the shrimp head, smash it and mix it evenly, and then sterilize it; S2. Add Bacillus amylolyticus solution into shrimp gill sauce obtained in step S1, mix well and then culture; S3. Add lactobacillus plantarum solution into the shrimp gill sauce obtained in step S2, mix well and continue to culture. The invention adopts the above microbial processing method to improve the nutrient content of shrimp gill sauce, fully release the protein in shrimp gill sauce, improve the nutrient content of shrimp gill sauce, and extend the shelf life of shrimp gill sauce.

21: 2023/03114. 22: 2023/02/28. 43: 2023/05/08
51: B01J
71: Taiyuan University of Technology
72: Yongjun LIU, Zhiwen LI, Kejing WANG, Yixiao WU, Xueyu ZAN, Chaoyu ZHANG, Wei HUANG
33: CN 31: 202211635980.3 32: 2022-12-20
54: A HYDROPHOBIC CATALYST FOR CO-HYDROGENATION TO MIXED ALCOHOLS, ITS PREPARATION METHOD AND APPLICATION
00: -
A hydrophobic catalyst for CO hydrogenation to mixed alcohols, its preparation method and application, which belongs to the field of chemical technology. firstly, a slurry catalyst is prepared by a complete liquid phase method. Secondly, a solid powder is obtained after solid-liquid separation. Then, the solid powder is placed in a silylation reagent for hydrophobic modification. Finally, a hydrophobic catalyst is prepared by vacuum drying. The CuZn hydrophobic catalyst provided by the invention has a simple preparation process and good repeatability. Compared with the unmodified catalyst, it can significantly weaken the occurrence of water gas shift side reactions, inhibit the formation of by-product CO2, and greatly improve the total alcohol selectivity.

21: 2023/03115. 22: 2023/02/28. 43: 2023/05/09
51: A01H
71: Research Institute of Tropical Forestry, Chinese Academy of Forestry
72: Fan Chunjie, Zeng Bingshan, Luo Ping
54: A SIMPLE AND HIGH-EFFICIENCY GENETIC TRANSFORMATION METHOD OF EUCALYPTUS HAIRY ROOTS
00: -
The invention discloses a simple and high-efficiency genetic transformation method of eucalyptus hairy roots, including culturing a sterile eucalyptus multiplication seedling; culturing and activating Agrobacterium rhizogenes with a 35S::GUS gene or 35S::eGFP gene; dipping the sterile eucalyptus multiplication seedling with a resuspended bacterial solution of gene-activated Agrobacterium rhizogenes; co-culturing a dipped sterile eucalyptus multiplication seedling; inducing and culturing roots of the sterile eucalyptus multiplication seedling; verifying transfer of a target gene into a eucalyptus root system from a protein level and a protein level, respectively. Dipping a sterile Eucalyptus urophydis seedlings with Agrobacterium rhizogenes Ar1193 containing 35S::GUS and 35S::eGFP reporter genes to obtain chimeric transgenic plants with root transformation can not only greatly shorten a transformation cycle, but also have relatively intuitive experimental results, which can be expressed stably for a long time.

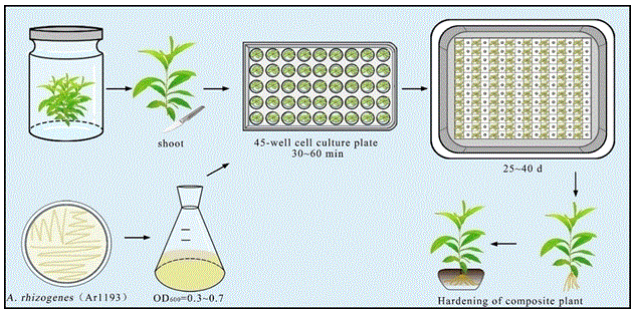

21: 2023/03116. 22: 2023/02/28. 43: 2023/05/09
51: G01R
71: Anhui Polytechnic University
72: Manman XU, Xueming LI, Wenqing ZHANG, Zhen ZHANG, Yongming LIU, Jie WANG, Siqi CHEN, Zhebin ZHANG

54: CALIBRATED HALL SENSOR DEVICE AND METHOD FOR RUNNING A CALIBRATED HALL SENSOR

00: -

The present invention discloses a calibration Hall sensor device comprising a calibration magnet, a calibration tool, a host computer, a SENIS Gauss meter connected to the host computer and a nuclear magnetic resonance instrument. The present invention uses a calibrated Hall sensor device and a method for running a calibrated Hall sensor as described above to enable simultaneous calibration of multiple Hall sensors, which effectively improves calibration efficiency and calibration reliability and can effectively ensure the accuracy of calibration data.

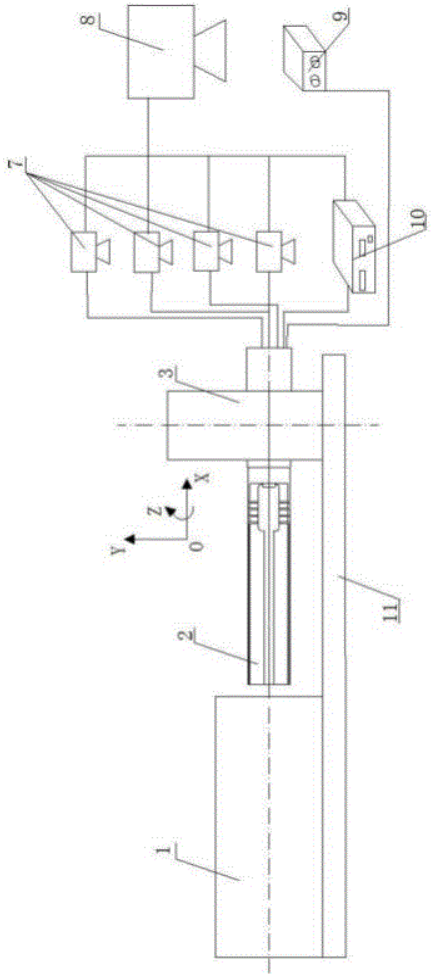

21: 2023/03117. 22: 2023/02/28. 43: 2023/05/10
51: G01N
71: China Railway Xi'an Survey, Design and Research Institute Co. , Ltd, of CREC, Xi'an University of Technology
72: Chaoneng BAI, Xin ZOU, Yaojiang LIU, Rongjin LI, Weihu YU, Haijun LI, Yudong LI, Rongjian LI, Shibin ZHANG, Weishi BAI

54: A CALCULATION METHOD FOR PASSIVE EARTH PRESSURE ON THE BACK SPACE OF COUNTERFORCE WALL OF THE SHIELD LAUNCHING SHAFT

00: -

The invention discloses a method for measuring the passive earth pressure in the back space of the counterforce wall of the shield launching shaft. Based on the joint strength, the equilibrium condition of any point of the surrounding rock of the counterforce wall of the loess shaft in the limit equilibrium state is established. Under the condition of circumferential compressive stress coefficient, combined with the equilibrium differential Formula of

the surrounding rock problem of the counterforce wall of the loess shaft, the calculation Formula of the passive earth pressure in the back space of the counterforce wall of the loess shaft in the passive limit equilibrium state is derived. The calculation conditions under different circumferential compressive stress coefficients are selected to verify and analyze the correctness and rationality of the calculation Formula of the passive earth pressure in the back space of the counterforce wall of the shield launching shaft.

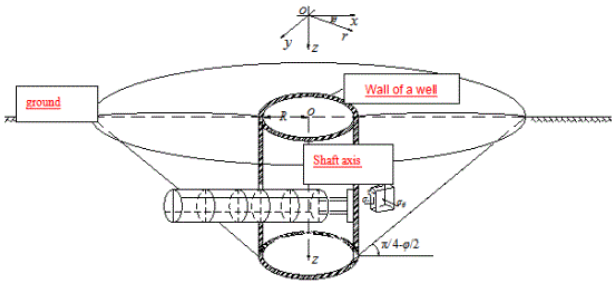

21: 2023/03118. 22: 2023/02/28. 43: 2023/05/10
51: G01N
71: Xi'an University of Technology, China Railway Xi'an Survey, Design and Research Institute Co. , Ltd, of CREC
72: Rongjian LI, Chaoneng BAI, Guoqiang LIN, Rongjin LI, Xin ZOU, Weishi BAI, Shibin ZHANG, Lei WANG, Yongqi ZHANG
54: A TEST METHOD FOR MEASURING TENSILE STRENGTH OF SOIL UNDER NEGATIVE CONFINING PRESSURE
00: -
The invention discloses a test method for measuring the tensile strength of soil under negative confining pressure. Based on the equal section loading axis triaxial apparatus, the specific steps are as follows: preparing cylindrical samples; the chemical adhesive was applied on the side of the sample and the rubber film was inserted. After the rubber film is cemented with the sample, the sample is cemented with the base of the pressure chamber sample and the end of the loading shaft through the strong adhesive; finally, two kinds of tests were carried out on the samples: triaxial tensile stress path test of soil under negative confining pressure; triaxial compression stress path test of soil under negative confining pressure. The invention lays a foundation for studying the strength characteristics of loess under the condition of tensile shear stress path.

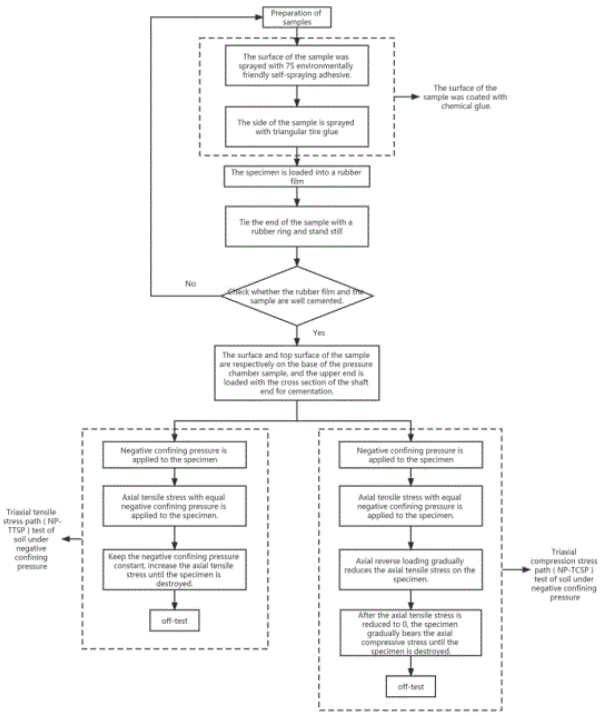

21: 2023/03120. 22: 2023/02/28. 43: 2023/05/08
51: E21F
71: University of Science and Technology Beijing
72: Peng LI, Liang SUN, Yu WANG, Jinwei WANG, Fenhua REN
33: CN 31: 202211659783.5 32: 2022-12-22
54: INTELLIGENT DIAGNOSIS AND DECISION MAKING METHOD FOR MULTI-SOURCE DISASTER INFORMATION OF DEEP MINE ROADWAY SURROUNDING ROCK
00: -
The present invention discloses a method for intelligent diagnosis and decision making of multi-source disaster information of the surrounding rock of a deep mine shaft, the specific steps are as follows: step S1: analyse the existing data to determine the prediction index, establish a relational model, and pass the collected data into a database table through the relational model to construct a database of multi-source information affecting the stability of the surrounding rock of the shaft; step S2: establish a multi-dimensional Gaussian Bayesian decision model and least squares support vector machine based diagnostic model to obtain two sets of decision outputs; Step S3: fusion of the two sets of decisions in Step S2 by a weighted modified DS evidence theory model. Using the above-mentioned intelligent diagnosis and decision-making method for

multi-source disaster information of the surrounding rock in deep mine tunnels, the judgment of the safety state of the surrounding rock is more accurate, the fault tolerance of the information processing can be increased, and the overall diagnosis result is less affected when a certain sensor failure occurs again.

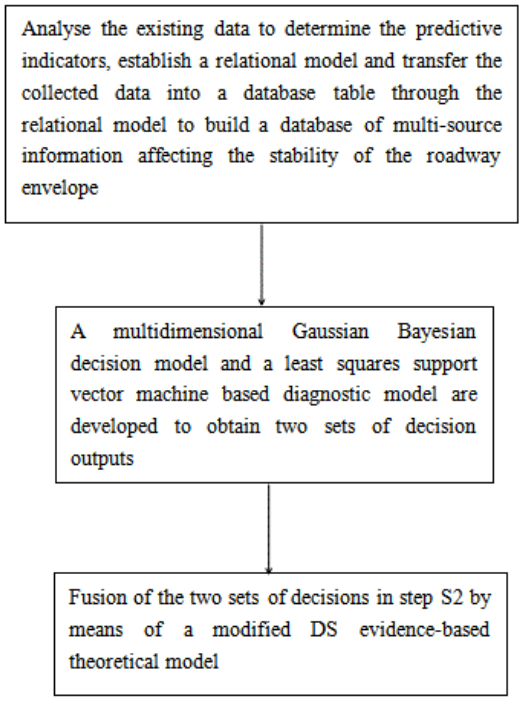

21: 2023/03121. 22: 2023/02/28. 43: 2023/05/08
51: B03B
71: Taiyuan University of Technology
72: Qian ZHANG
33: CN 31: 202210482207.1 32: 2022-05-06
54: A METHOD FOR SEPARATING RESIDUAL CARBON FROM CARBON-CONTAINING COAL ASH AND AN AIRFLOW SEPARATION SYSTEM
00: -
The invention belongs to the field of coal ash utilization, and provides a method for separating residual carbon from coal ash and a gas flow separation system. The method includes the following steps: material selection is coal ash slag with residual carbon content greater than 10 % ; the material is dried and dehydrated until the water content is less than 0.5 %, and the large particles in the material are broken to a particle size of less than or equal 1 mm. Mechanic screening out ash less than the preset particle size; the ash slag larger than the preset particle size are mechanically ground to below the preset particle size and collected as the airflow grading material; the correlation method between the step-by-step separation target and the classifier parameters is established. Based on the density, carbon content, carbon distribution state and particle morphology of the airflow classification material, the process parameters of the airflow classifier is set to perform airflow separation. The decarbonized slag was collected at the sample collection place under the air classifier, the carbon-containing slag was collected at the cyclone separator, and the carbon-rich slag was collected at the pulse bag dust collector. The ignition loss of three kinds of ash was measured by muffle furnace.

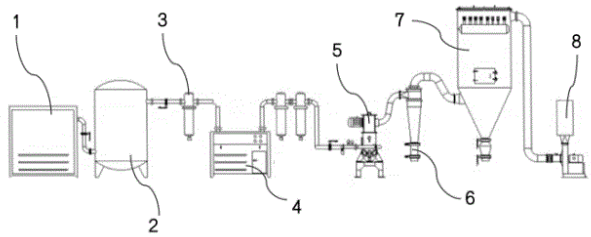

21: 2023/03123. 22: 2023/02/28. 43: 2023/05/09
51: F28F
71: Shenyang University of Technology
72: Wentao ZHENG, Feixue LU, Yanqiang REN, Ming SU, Kai DU, Hongjun HUANG, Xiaoguang YUAN
33: CN 31: 2023100621913 32: 2023-01-19
54: A METHOD FOR ADJUSTING THE AXIAL DIMENSIONS OF U-SHAPED BELLOWS
00: -
A method for adjusting the axial dimensions of U-shaped bellows solves the problem that the traditional method is difficult to avoid excessive stretching or compression, which is easy to cause additional material damage inside the bellows and affects the service life. The A method for adjusting the axial dimensions of U-shaped bellows is based on the material structure size and the hydroforming process, and the finite element simulation analysis is carried out. The modified analysis model parameters are used to establish the tensile or compressive deformation finite element model of the axial height adjustment of the bellows after hydroforming. In addition to the conventional direct tension or compression, the deformation area during axial size

adjustment is controlled by applying internal pressure support and external constraints. According to the finite element simulation results, the axial size adjustment effect is evaluated, and the tensile or compressive amount and internal pressure are corrected. The method of the invention can obtain the optimized process parameters for adjusting the axial size of the bellows, which can realize the precise control of the deformation area of the bellows, shorten the development cycle, reduce the development cost, and significantly improve product quality.

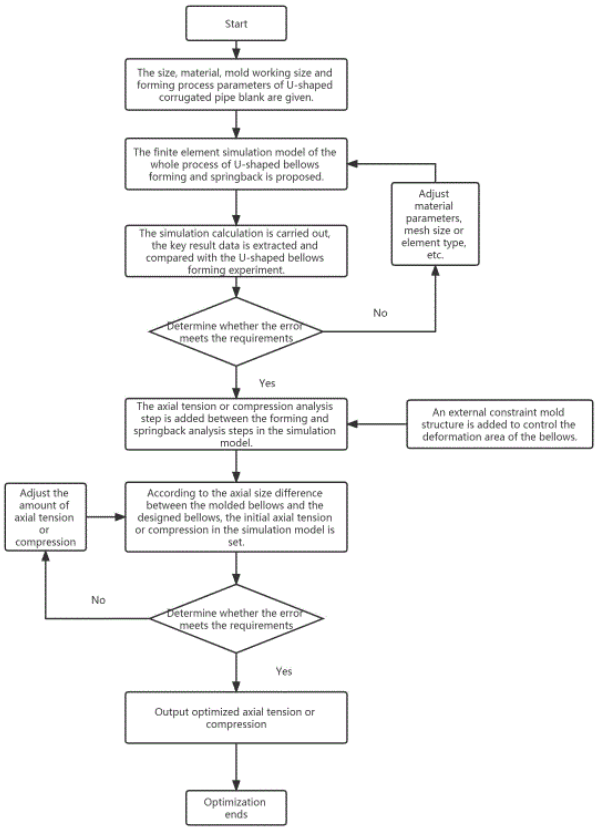

21: 2023/03145. 22: 2023/02/28. 43: 2023/05/09
51: B22C
71: Shenyang University of Technology, Liaoning Purui Technology Co., Ltd.
72: Weihua LIU, Lai SONG, Haolong LIU
54: A PREPARATION AND USE METHOD OF A CASTING WATER-SOLUBLE BINDER
00: -
The invention discloses the preparation and use method of casting water-soluble binder, which relates to the technical field of core making in the casting industry, including the preparation of binder and the preparation of binder core: the preparation of binder: first add sodium hexametaphosphate into the reactor, then add water, open the stirrer, make the sodium hexametaphosphate fully dissolved, add the modifier, mix for 30min after it is dissolved and transparent, and take the material for standby. The concentration of sodium hexametaphosphate aqueous solution is 50%~70%, and the modifier is aluminum dihydrogen phosphate aqueous solution, with the addition amount accounting for 15%~35% of the total weight of the binder; The preparation methods of the binder core are divided into heat-hardening preparation method and self-hardening preparation method. The invention adopts the above method to prepare and use a casting water-soluble binder, which has the technical advantages of simple preparation process, stable chemical properties, low cost and so on.

21: 2023/03146. 22: 2023/02/28. 43: 2023/05/09
51: C04B
71: Jingdezhen Ceramic University
72: Guo FENG, Feng JIANG, Weihui JIANG, Zi HU, Tuyue WEI, Jian LIANG, Jianmin LIU, Qing HU, Lifeng MIAO, Qian WU, Quan ZHANG, Xiaojun ZHANG
33: CN 31: 202210928327.X 32: 2022-08-03
54: A METHOD FOR THE PREPARATION OF CERAMIC POWDERS BY A NON-SOLVENT REPLACEMENT NONAQUEOUS PRECIPITATION METHOD
00: -
The invention discloses a method for the preparation of ceramic powders by a non-solvent replacement nonaqueous precipitation method, which comprises the following steps: Step 1: dissolve the precursors raw material in nonaqueous solvent A to prepare A solution of the precursors raw material; Step 2: promote the formation of A sol from step A solution through nonhydrolytic polycondensation in a certain way; Step 3: add another nonaqueous non-solvent B to the second step sol, and stir to form the B suspension of A sol; Step 4: desolvent A and recycle the suspension in step 3 to obtain precursors precipitated B slurry; Step 5: desolvent B and recycle the slurry B in step 4, and then grind and calcine the precipitate to obtain ceramic powder. The invention has wide application range, no need to consume precipitant or catalyst, solvent and by-product can be recycled into treasure, and the

molecular economy of the invention scheme is good, so it has broad application prospects.

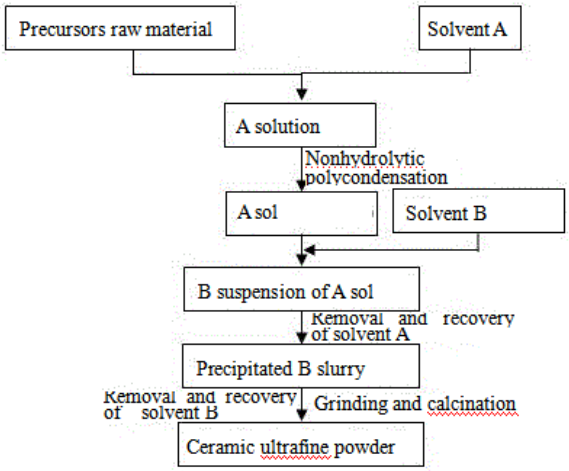

21: 2023/03147. 22: 2023/02/28. 43: 2023/05/09
51: C12P
71: Northeast Normal University
72: Jianling XU, Hanxi WANG, Xuejun LIU, Jitian SUN, Xinyu WANG, Li ZOU
33: CN 31: 202210574258.7 32: 2022-05-24
54: METHOD FOR THE PREPARATION OF BIOGAS BY ANAEROBIC CO-FERMENTATION OF ANIMAL MANURE AND STRAW THROUGH THE ADDITION OF BIOCHAR
00: -
The present invention discloses a method for preparing biogas by adding biochar to promote anaerobic co-fermentation of livestock manure and straw, comprising the following steps: (1) cleaning the impurities in fresh livestock manure, air-drying the straw and crushing it; (2) soaking the straw in aqueous sodium hydroxide solution, then rinsing it with water, and finally sonicating it; (3) adding livestock manure, straw, biochar and water to a fermenter, sealing it and heating it at the same time, sealing After the end of the process, biogas is produced by introducing biogas solution for anaerobic fermentation. The method of preparing biogas in the present invention can effectively increase the total gas production and total methane production, and shorten the gas production retention time.

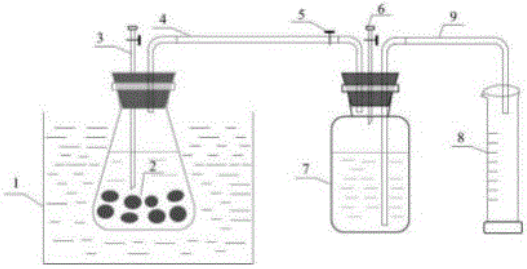

21: 2023/03148. 22: 2023/02/28. 43: 2023/05/09
51: A61C
71: Dongguan Southeast Central Hospital
72: ZHAO, Bingjing
54: COMBINED FIXED ORTHODONTIC METHOD FOR MAXILLARY AND MANDIBULAR EXPANSION
00: -
A combined fixed orthodontic method for maxillary and mandibular expansion. The method includes the following steps: trying bands on first molars and first premolars on both sides of an upper jaw of a patient; trying bands on first molars on both sides of a lower jaw, casting plaster models, maxillary and mandibular expanders, and performing welding to obtain finished products; wearing the maxillary and mandibular fixed expanders into the mouth, and performing quick maxillary expansion; performing medium-quick mandibular expansion; bonding brackets to surfaces of labial dental crowns, placing nickel-titanium ovoid arch wires into trenches, and ligating the arc wires; relieving crowded teeth of the upper and lower jaws, and performing sequential replacement; stopping force application; removing the fixed expanders; and removing the arch wires and the brackets in sequence. The method can achieve integral buccal movements of the teeth, such that the expansion efficiency is improved.

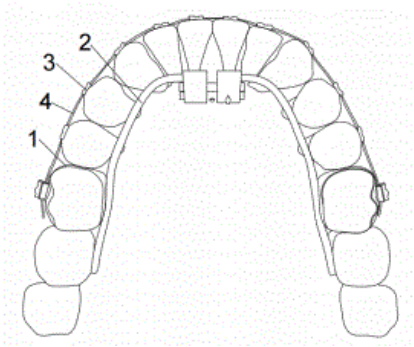

21: 2023/03149. 22: 2023/02/28. 43: 2023/05/10
51: F03D
71: Sinoma Overseas Development Co., Ltd
72: Linhe ZHU, Hongsheng CHEN, Sijia WEN, Bing YI, Yang WANG, Jiake WU, Nianping LYU, Lin ZHANG, Chunhua LI
33: CN 31: 2022206556355 32: 2022-03-24
54: A HYBRID WIND TURBINE TOWER
00: -
The invention discloses a hybrid wind turbine tower, including a steel conversion section, a concrete tower, a steel gasket ring, and multiple fasteners. A plurality of first connecting holes and a plurality of second connecting holes are provided on the steel gasket ring, and a first through hole and a second through hole are provided on the top prefabricated part. At the bottom of the steel conversion section, there are multiple first installation holes and multiple second installation holes. The first installation hole, the first through hole and the first connection hole are used to wear the stranded wire. After the fastener passes through the second installation hole, the second through hole and the second connection hole, the steel conversion section, the steel gasket ring and the top preform are installed together. The hybrid wind turbine tower provided by the invention effectively ensures the structural stability of the steel conversion section before the prestressed tensioning of the hybrid wind turbine tower during the construction process, avoids the separation of the steel conversion section from the top surface of the concrete tower, ensures the structural safety of the hybrid wind turbine tower, and avoids causing safety accidents.

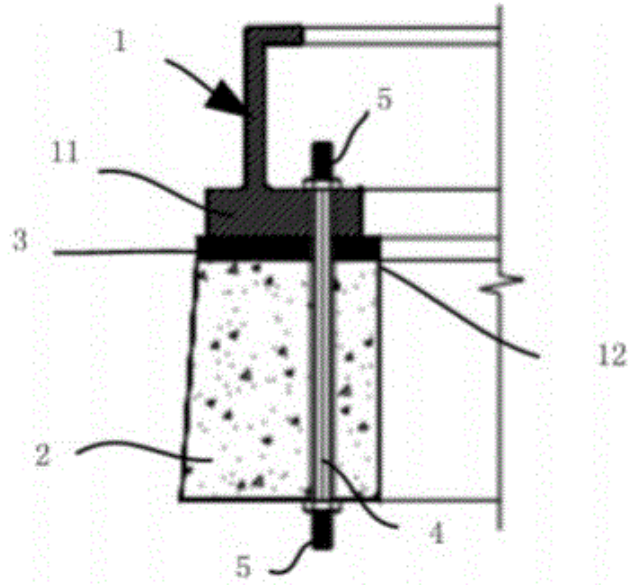

21: 2023/03150. 22: 2023/02/28. 43: 2023/05/10
51: F03D
71: Sinoma Overseas Development Co., Ltd
72: Lei YANG, Yue LI, Yuewei WANG, Lin ZHANG, Jiake WU, Miao YU, Sijia WEN, Liming REN, Chunhua LI
33: CN 31: 2023100531156 32: 2023-02-03
54: A MOLD KIT FOR WIND TURBINE TOWER AND ITS USAGE METHOD
00: -
The invention discloses a mold kit for wind turbine tower and its use method, including a bottom mold, an outer mold, an internal mold, a left end mold and a right end mold. The bottom die includes an installation plate, on which there are multiple sets of internal die installation holes and multiple sets of external die installation holes. The internal mold includes a connected internal mold arc panel, a first upper end face, and a first lower end face. The first lower end face is installed on the bottom mold through one set of internal mold mounting holes ; the outer mold includes the connected outer mold arc panel, the second upper end face and the second lower end face. The outer mold arc panel is arranged in parallel with the inner mold arc panel, and the second lower end face is installed on the bottom mold through one set of outer mold mounting holes. A pouring cavity for pouring concrete is enclosed between the inner mold, the outer mold, the left end mold and the right end mold. A hand hole box is installed on the inner wall surface to form an operating cavity after the concrete pouring is

completed. The mold kit for wind turbine tower and use method provided by the invention reduce the material input of the mold and reduce the production cost of the mold.

21: 2023/03151. 22: 2023/02/28. 43: 2023/05/10
51: E02D
71: Sinoma Overseas Development Co., Ltd
72: Chao GAO, Sijia WEN, Miao YU, Yang WANG, Bing YI, Liming REN, Yuewei WANG, Nianping LYU, Hongsheng CHEN
33: CN 31: 2022106250594 32: 2022-06-02
54: A CONNECTION ASSEMBLY FOR PRECAST CONCRETE MEMBERS AND ITS USAGE METHOD
00: -
The invention discloses a connection assembly for precast concrete members and a usage method, including the first; prefabricated components, second prefabricated components, threaded rods and nuts. The first prefabricated components include steel plates and steel pipes. The first prefabricated components have a first docking end and an operating end. There is an operating cavity in the operating end, a through hole on the steel plate, and a channel in the steel pipe. The second prefabricated component includes a threaded sleeve, and the second prefabricated component has a second docking end; after the threaded rod passes through the hole, through the hole and the operating chamber in turn, the second thread end is connected to the thread sleeve, and the nut thread is installed on the first thread end and fixed on the steel plate, so that the first prefabricated component and the second prefabricated component are spliced together.

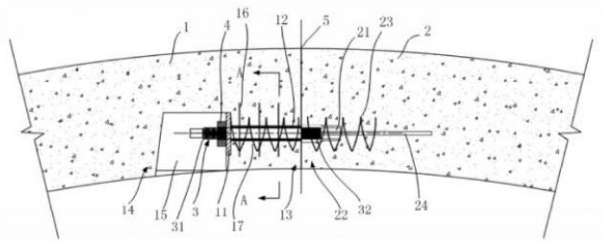

21: 2023/03152. 22: 2023/02/28. 43: 2023/05/10
51: G01N
71: Xi’an University of Technology, China Railway Xi'an Survey, Design and Research Institute Co., Ltd, of CREC
72: Rongjian LI, Guoqiang LIN, Chaoneng BAI, Rongjin LI, Xin ZOU, Shibin ZHANG, Weishi BAI
54: A METHOD FOR MEASURING THE SPATIAL ACTIVE EARTH PRESSURE OF SHAFT LINING IN LOESS AREA
00: -
This invention discloses a method for measuring the spatial active earth pressure of shaft lining in loess area. 1. Construct the equilibrium differential equation based on the surrounding rock outside the shaft wall in loess area; 2. Determine the yield conditions of the surrounding rock outside the shaft wall in the loess area based on the joint strength; 3. The expression of stress component of surrounding rock outside shaft wall in loess area under active limit state is constructed. 4. The spatial active earth pressure of shaft lining in loess area based on joint strength under Haar & Von Karman condition is determined. The invention adopts the above-mentioned method for measuring the spatial active earth pressure of shaft lining in loess area, which solves the problems of unreasonable calculation and large numerical error of active earth pressure of shaft lining space based on Mohr-Coulomb strength theory.

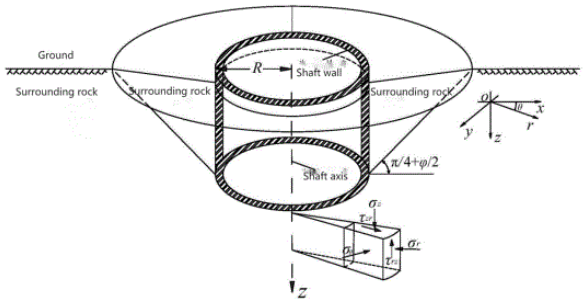

21: 2023/03153. 22: 2023/02/28. 43: 2023/05/10
51: A61K; A61P
71: Dr. T. Ramanathan, Dr. D. Jayarajan, Dr. Aruna Kumari Nakkella, M. Malinidevi, Dr. Rajeshwari Pasupula, Dr. N. Swathi, Dr. Muni Kumar Dokka, Sourav Gorai, Saumya Surekha, Dr. Harishchander Anandaram, Dr. V. A. Shinde, Dr. Ishan Y Pandya
72: Dr. T. Ramanathan, Dr. D. Jayarajan, Dr. Aruna Kumari Nakkella, M. Malinidevi, Dr. Rajeshwari Pasupula, Dr. N. Swathi, Dr. Muni Kumar Dokka, Sourav Gorai, Saumya Surekha, Dr. Harishchander Anandaram, Dr. V. A. Shinde, Dr. Ishan Y Pandya
54: PHARMACEUTICAL COMPOSITION FOR REDUCING OF CARDIOVASCULAR DISEASES
00: -

The present disclosure proposes a composition that reduces the risk of cardiovascular diseases. The pharmaceutical composition comprises an unsaturated fatty acid, pantethine and an antioxidant. The proposed composition reduces hypertriglyceridemia and provides antioxidant activity. The proposed composition interacts positively to reduce risk factors associated with atherosclerosis. The proposed composition reduces multiple sites of LDL oxidation that lead to cardiovascular disease. The proposed composition reduces elevated plasma triglyceride and oxidized LDL levels simultaneously, as well as hyper-aggregation.

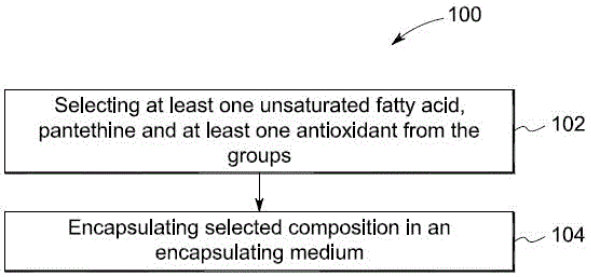

21: 2023/03154. 22: 2023/02/28. 43: 2023/05/10
51: C09C; G01J; G01N
71: Gayatri Vidya Parishad College of Engineering (Autonomus), Dr. P. V. Rajeswari, Anjan Kr Dasgupta, Anirban Bose, Arpita Das
72: Dr. P. V. Rajeswari, Anjan Kr Dasgupta, Anirban Bose, Arpita Das

54: BACTERIAL COMPOSITION FOR ENHANCING FLUORESCENCE

00: -

The present utility model relates to a bacterial composition for enhancing fluorescence by a biogenic synthesis process of Titanium dioxide (TiO2)-carbon nanohybrids (NHs) tailored with natural pigments for analysing and enhancing effective fluorescence property and light harvesting property. The biogenic synthesis of Titanium dioxide (TiO2) nanohybrids comprises preparation of the Titanium dioxide (TiO2)-carbon nanohybrid (TiO2-C-NH) a Titanium dioxide (TiO2) -carbon layered nanohybrid (TiO2 - C-LNH) and a Titanium dioxide (TiO2) nanoparticle samples. The harvested biomaterial extracellular protein pigment complexes (EPPC) analysed through spectroscopic characterization methods to review the enhanced fluorescence properties of TiO2-C-NH-tailored with extracellular protein pigment complexes (EPPC).

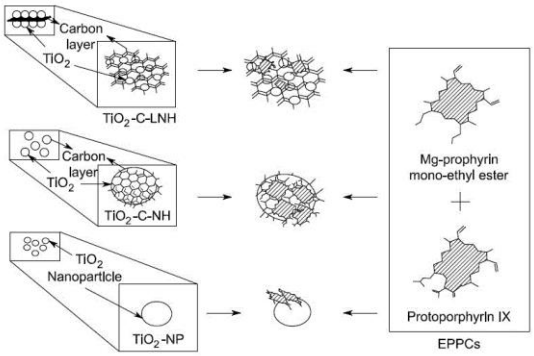

21: 2023/03155. 22: 2023/02/28. 43: 2023/05/10
51: G01D; H04L
71: Gayatri Vidya Parishad College of Engineering (Autonomus), Dr. V. Leela Rani, Golusupudi Lalith Nadh, Kandikuppa Veda Samhitha, Kuchetti Vidya Sagar, Karumunur Sai Abhishek, Kodanada Satya Kesava Kutchu, Sai Siva Aditya Srikar Konduri, Lankalapalli Lokesh
72: Dr. V. Leela Rani, Golusupudi Lalith Nadh, Kandikuppa Veda Samhitha, Kuchetti Vidya Sagar, Karumunur Sai Abhishek, Kodanada Satya Kesava Kutchu, Sai Siva Aditya Srikar Konduri, Lankalapalli Lokesh

54: AN IOT-BASED MONITORING SYSTEM FOR SMART AGRICULTURE AND METHOD THEREOF

00: -

The present utility model relates to an IoT-based monitoring system for smart agriculture that facilitates the farmer in analyzing the required parameters for better irrigation and automates the irrigation, resulting in better and more effective crop growth. The IoT-based monitoring system comprises, a Raspberry PI model 3B microprocessor for physical computing and explore the internet of things (IoT), a GSM SIM 800A (Global System for Mobile communication) for wireless network connection, a moisture sensor to measure the water content in the soil, a pH sensor to determine the nature of the soil, a digital temperature and humidity (DHT-11) sensor for monitoring the surrounding temperature and humidity, a NPK sensor to analyze the soil nutrient level, a LCD (liquid crystal display) to display the resultant data, an OLED organic light emitting diodes to create a digital display of the monitored data, and a relay module serves as an electrical switch.

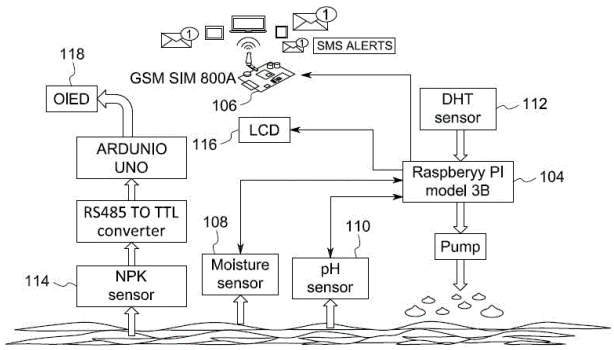

21: 2023/03160. 22: 2023/02/28. 43: 2023/05/03
51: B01D; B01J; C01G
71: NEI MONGOL SHENGLONG DADI TECHNOLOGY CO., LTD
72: LI, Yuqiang, CHEN, Yongtang, ZHANG, Huacai, MA, Guangpo, CHANG, Yongfa, LI, Yanjin, LIU, Desheng, LIU, Chunhua, LI, Yunxia
33: CN 31: 202210373229.4 32: 2022-04-11

54: METHOD FOR SYNTHESIZING VINYL CHLORIDE BY USING MERCURY CATALYST

00: -

Disclosed in the present invention is a method for synthesizing vinyl chloride by using a mercury catalyst, the method belonging to the technical field of chemical synthesis. A method for synthesizing the vinyl chloride by using the mercury catalyst, comprises raw-material soaking, separation, acid pickling, washing with water, drying, waste-catalyst recovery and the treatment of waste gas and waste liquid. The raw-material soaking involves adding a required amount of mercuric chloride to a mechanical-stirring dissolution tank heated by steam, then adding a certain amount of industrial hydrochloric acid and a certain amount of clear water or recycled water in an industrial pool, starting a stirrer, introducing steam therein to heat same to 80 degree centigrade, and keeping the temperature constant for 20 minutes, thereby dissolving the mercuric chloride into a transparent solution for later use. The method provided in the present invention can realize strong adaptability.

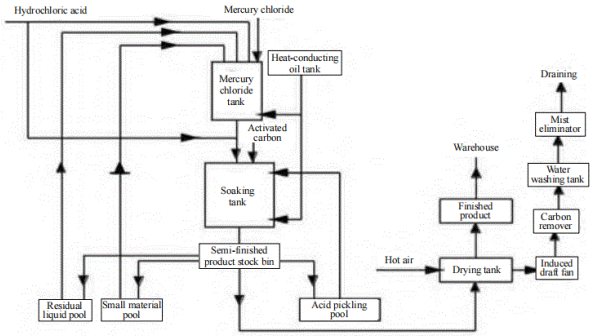

21: 2023/03166. 22: 2023/02/28. 43: 2023/05/03
51: B64C; B64D
71: ANHUI SCIENCE AND TECHNOLOGY UNIVERSITY
72: ZHANG, Guanjin, QUAN, Ling, YUAN, Ping, LI, Xinwei, ZHANG, Zhenguo, LIU, Jikai, LU, Lijiang, MA, Qiang, YU, Xuming, CAO, Zheng, LONG, Zijie, XU, Yuanping, LIU, Jiale

54: SURVEYING AND MAPPING UNMANNED AERIAL VEHICLE

00: -

Disclosed in the present invention is a surveying and mapping unmanned aerial vehicle, which relates to the technical field of surveying and mapping. The surveying and mapping unmanned aerial vehicle comprises a body, support plates, electric motors, fan blades, and a surveying and mapping camera, wherein the support plates are respectively connected to comers of the upper end of the body, each electric motor is arranged in one support plate, an output end of each electric motor is connected to one fan blade, an air inlet is provided in the body, a heat dissipating hole in communication with the air inlet is provided in each support plate, and the surveying and mapping camera is rotationally connected to the lower end of the body. The surveying and mapping unmanned aerial vehicle of the present invention is capable of performing self-heat-dissipation during flight.

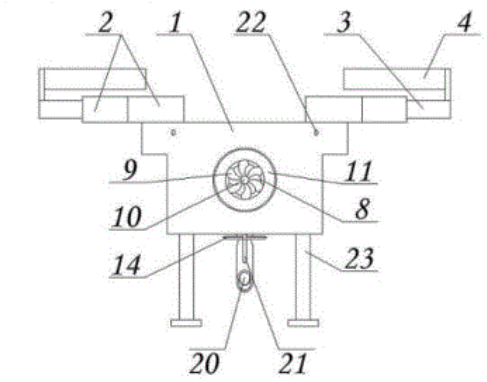

21: 2023/03226. 22: 2023/03/01. 43: 2023/03/24
51: G06F; H04L; H04W
71: VUI CONSULTANCY PVT. LTD.
72: ACHEN JAKHER, AMAN GOEL
33: IN 31: 202211016013 32: 2022-03-22

54: AN ANTI-SNOOPING APPARATUS

00: -

Disclosed is an anti-snooping apparatus to identify security status of a smart device. The anti-snooping apparatus includes a memory unit to store instructions, a processing unit coupled to the memory unit to process the stored instructions, an antenna coupled to the processing unit for creating a Wi-Fi network to connect with the smart device, a graphical user interface to display the processed instructions. The instructions initiates from a step of connecting the antenna wirelessly to the smart device, followed by a step of analyzing data packets to identify information going in and out of the smart device; followed by a step of scanning the smart device to detect IP's having suspicious connections to malicious servers and suspicious outflow of data; and finally followed by a step of displaying the security status and result of the scan of the smart device.

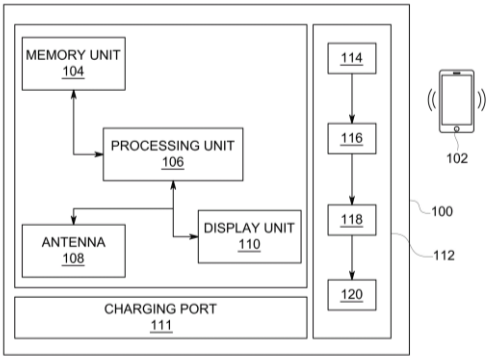

21: 2023/03261. 22: 2023/03/02. 43: 2023/05/10
51: C12Q
71: Dalian Minzu University, Institute of Biological Resources, Jiangxi Academy of Sciences
72: ZHENG, Qiuyue, YANG, Aifu, YANG, Chunhua, SUN, Yao, CAO, Jijuan, ZHANG, Huang, ZHANG, Zhihong, SUN, Jie, ZHANG, Qiang

54: METHOD, KIT AND APPLICATION FOR DETECTION OF EDWARDSIELLA TARDA BASED ON RPA COMBINED WITH CRISPR CAS12A

00: -

Disclosed are a method, a kit and application for detection of Edwardsiella Tarda based on RPA combined with CRISPR Cas12a. The kit amplifies a target gene fragment of Edwardsiella Tarda by using the RPA technology, uses CRISPR Cas12a to specifically target the target gene fragment of Edwardsiella Tarda, and precisely identifies the gene loci of Edwardsiella Tarda for rapid detection. Compared with the mature and widely used real-time fluorescent PCR method, the present invention does not require a thermal cycler with a function of temperature rising and decreasing, but is capable of detecting whether the aquaculture and aquatic products contain Edwardsiella Tarda only by a metal bath device or water bath device. The method has the advantages of high sensitivity, high specificity, rapid and accurate detection and simple operation, further improving the rapid detection method of human-fish co-pathogenic bacteria in the aquaculture.

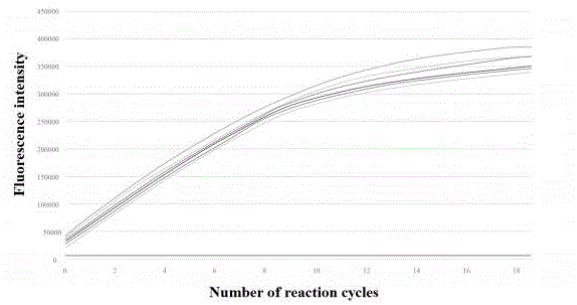

21: 2023/03318. 22: 2023/03/03. 43: 2023/05/10
51: B05B
71: VOOGT, John Richard
72: VOOGT, John Richard
33: ZA 31: 2020/05853 32: 2020-09-22
54: SPRAYING DEVICE
00: -
A spraying device (10) for spraying plants includes: (i) a body; (ii) a first liquid nozzle (14a) on the body, for discharging a stream of atomised liquid; (iii) a first air nozzle (16a) on the body, for discharging a stream of air; (iv) a first vane (22a) associated with the first air nozzle (16a) for inducing rotation of the airstream exiting the first air nozzle (16a); (v) a second air nozzle (16b) on the body, for discharging a stream of air; and (vi) a second vane (22b) associated with the second air nozzle (16b) for inducing rotation of the airstream exiting the second air nozzle (16b). The first liquid nozzle (14a) is flanked by, and laterally spaced from the first and second air nozzles (16a; 16b).

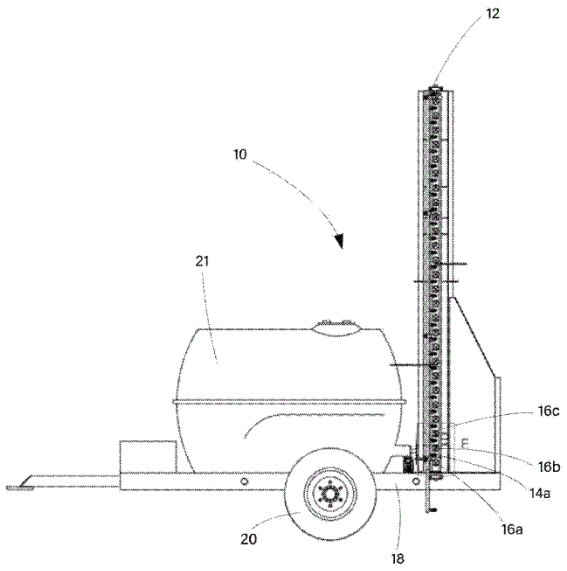

21: 2023/03433. 22: 2023/03/08. 43: 2023/05/10
51: A61K
71: SOMADE, Prakash Maruti
72: SOMADE, Prakash Maruti, SALUNKHE, Vijay Rajaram, CHOPADE, Atul Ramchandra, PATIL, Pramod Anil, SOMADE, Pratik Prakash, PATIL, Priyanka Ravindra
33: IN 31: 202021034516 32: 2020-08-11
54: A PROCESS FOR PREPARING IMMEDIATE RELEASETOPICAL FORMULATION OF PTEROCARPUS MARSUPIUM ROXB
00: -
A process for preparing immediate release topical formulation of Pterocarpus marsupium Roxb comprising the steps of: i) preparing an oil phase by mixing an oil having specific gravity of 0.860-1.046 and first preservative and heating the mixture at 60°C until the preservative melts in the said oil; ii) stirring the oil phase as obtained in step (i) for 30 minutes; iii) preparing an aqueous phase by mixing aqueous extract of Psterocarpus marsupium, surfactant, co-surfactant, buffer and second preservative at 60°C; iv) dispersing the oil phase of step (ii) into the aqueous phase of step (iii) to form an oil-in-water mixture and stirring the said mixture for 30 minutes; v) adding a rheological modifier to the mixture as obtained in step (iv) and heating the said mixture at 70°C for 5 minutes; & vi) stirring the mixture as obtained in step (v) for 30 minute to form a homogeneous mixture.

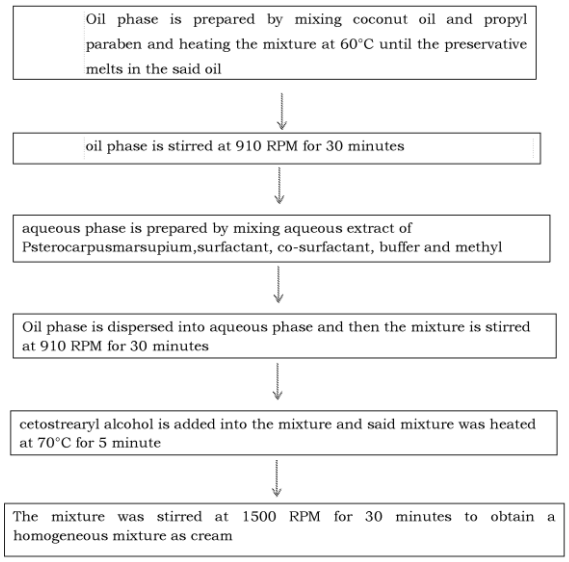

Fig. 1

21: 2023/03465. 22: 2023/03/09. 43: 2023/03/30
51: B41F
71: Dr. Vishal Sharma
72: Dr. Vishal Sharma

54: A QUANTUM-BASED DIAGNOSTICS METHOD FOR ADDITIVE MANUFACTURING MACHINE

00: -

The present invention provides a method to increase the level and accuracy of machine intelligence, machine conditions need to be monitored more meticulously. A novel method for the condition monitoring of a 3D- printer is provided by the present invention. Quantum support vector machine (QSVM) is compiled for recognizing the health condition of the 3D-printer. The proposed quantum machine learning approach helps in monitoring the health state of the machine and classifies the same as healthy or aberrant. Classical machine learning approaches are inefficient to process the large amount of experimental data in real time. For better decision-making on such big data, quantum machine learning approaches are deployed which are much more efficient due to their exponential speed and parallel operation on complex sensor data, they show speedups in both the dimensionality and number of experimental data deployed to train the algorithm. The simulation results show that the proposed method has higher accuracy in fault diagnosis than the traditional Support Vector Machine. All the numerical simulations and experiments have been carried out on a real quantum hardware provided by the IBM Quantum computing over the cloud.

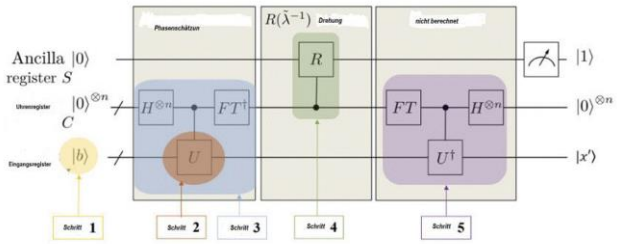

Figure 1: HHL algorithm-based quantum support vector machine

21: 2023/03467. 22: 2023/03/10. 43: 2023/03/30
51: E06C
71: Mirza Faizan
72: Mirza Faizan, Shayaan Shaik, Aqil Gudur, Zashaan T Shaik, Gupil Mayari, Omar Mohammed, Suleman Khan Mohammed, Mirza Rizwan, Humna Fakeha Khan, Mishaal Qureshi, Abdullah Hasani, Zaynab Khan
33: US 31: 17/720,606 32: 2022-04-14

54: METHOD AND SYSTEM FOR PROVIDING A SMART LADDER TO A USER

00: -

A method for self-rescuing a user climbing a smart ladder is provided. The method includes activating, by a processor, a mesh unit based on a detection of the user's step above a certain height from a pedalboard of the smart ladder.The mesh unit is installed along at least one side of the smart ladder. The mesh unit is extended outwardly like a folding hand fan to form a secured circular net mesh configuration along the sides of the smart ladder. Further, the method includes suspending, by the processor, the mesh unit, based on a detection of the user's step at the pedalboard. Furthermore, the method includes folding, by the processor, the mesh unit back along at least one side of the smart ladder. <<To be published with Fig. 3>>

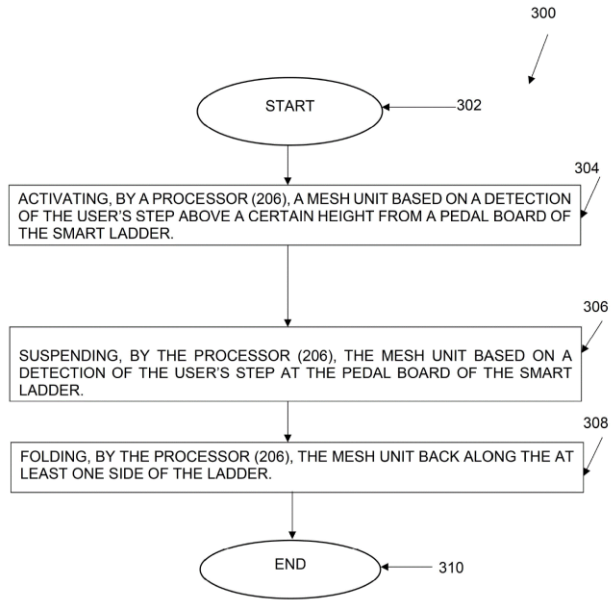

21: 2023/03468. 22: 2023/03/10. 43: 2023/03/30
51: G01D; G06F; G06Q
71: Mirza Faizan
72: Mirza Faizan, Mustafa Hasani, Malak Askar, Adam Mhal, Karim Medhat Askar, Manha Sadarulanam, Sooryavanshi Narayanan, Mirza Rizwan, Meher Saanvi Singh, Jiya Saanvi Singh, Benjamin Stafford, Sparsh Kamdar, Aaina Mitchell, Vishy Narayanan
33: US 31: 17/900,905 32: 2022-09-01

54: A SYSTEM FOR MONITORING WATER CONSUMPTION OF USERS AND A METHOD THEREOF

00: -

The present disclosure envisages a system and a method for monitoring water consumption of at least one user. The system comprises a water-holder unit configured to detect a registered user and further configured to measure an overall water consumption value of said registered user for a pre-defined time. The system further comprises a cloud server configured to receive said overall water consumption value of said registered user, perform analysis by employing at least one of artificial intelligence technique on said overall water consumption value of said registered user and generate a suggestive report depicting an actionable intelligence based on said analysis and a set of pre-defined parameters related to said registered user. The system stores in a repository data corresponding to said registered users, pre-defined time and a set of pre-defined parameters related to said registered user.

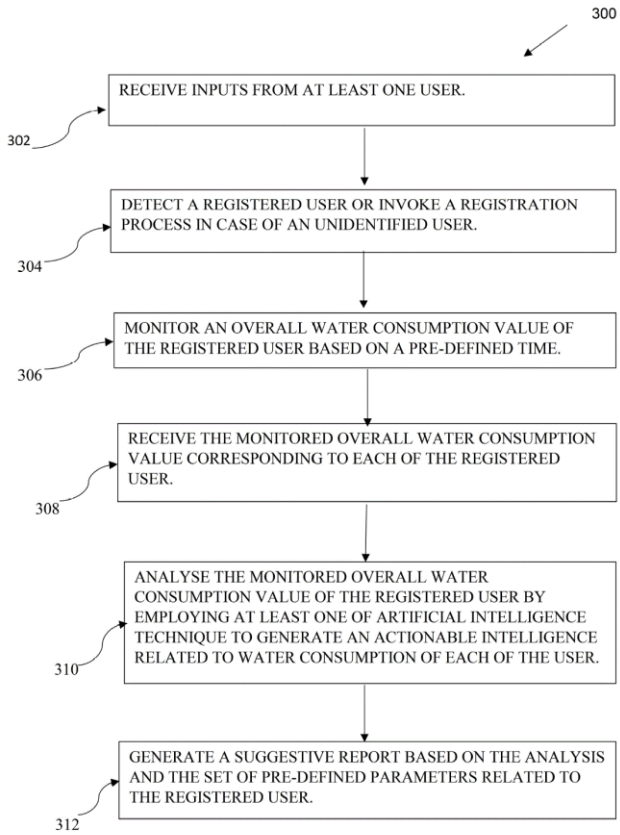

21: 2023/03469. 22: 2023/03/10. 43: 2023/03/30
51: G06F; H04N
71: Mirza Faizan
72: Mirza Faizan, Isha Agrawal, Tarik Syed, Nakshatra Piduri, Advaita Piduri, Madhalasa Iyer, Mirza Rizwan, Nithyashri Ramesh, Hisham Ahmad, Abdullah Kabeer, Mishaal Qureshi, Abdullah Hasani, Zaynab Khan
33: US 31: 17/900,922 32: 2022-09-01

54: A SYSTEM AND A METHOD FOR COLOR-BLIND PERSON TO DISTINGUISH COLORS IN A SURROUNDING

00: -

The present disclosure envisages a system for facilitating a color-blind person to accurately distinguish between certain shades of color in a surrounding. The system comprises an eye frame configured to obtain a plurality of information corresponding to each object present in the surrounding and a handheld device configured to cooperate with said eye frame through a communication network to receive the plurality of information corresponding to each object. The handheld device is configured to process the plurality of information for facilitating a color-blind

person to accurately distinguish between certain shades of color in the surrounding.

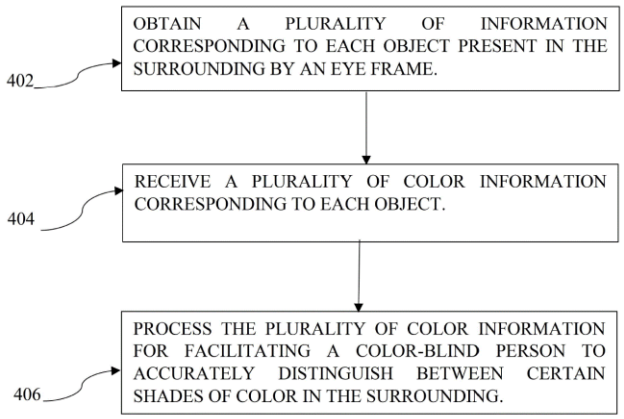

21: 2023/03470. 22: 2023/03/10. 43: 2023/03/30
51: A45C; H04M
71: Mirza Faizan
72: Mirza Faizan, Zara Majid, Aniq Shaikh, Ali Khan, Abdullah Mommandi, Basith Abdul Syed, Aayesha Syed Ibrahim, Mirza Rizwan, Saanchi Gabri, Pranav Kumar, Prisha Bhat, Hadia Khatri, Sufiya Khatri, Mishaal Qureshi, Abdullah Hasani, Zaynab Khan, Rishika Nandigam
33: US 31: 17/902,941 32: 2022-09-05

54: A BIODEGRADABLE COVER FOR A PORTABLE ELECTRONIC DEVICE

00: -

The present invention envisages a biodegradable cover for a portable device. The cover comprising a top portion including a plurality of adjustable puzzle pieces, wherein said top portion is attached at back wall of said portable device. Each puzzle piece further comprises a square piece and at least one magnetic side piece attached to said square piece, wherein each of said magnetic side piece of first puzzle piece is connected to center of square piece to define length and width of different sizes of portable devices and an expandable portion comprising a right section and a left section, for extending said biodegradable cover along the portable device. The biodegradable cover further includes at least one corner portion to attach said top portion with corners of said portable device.

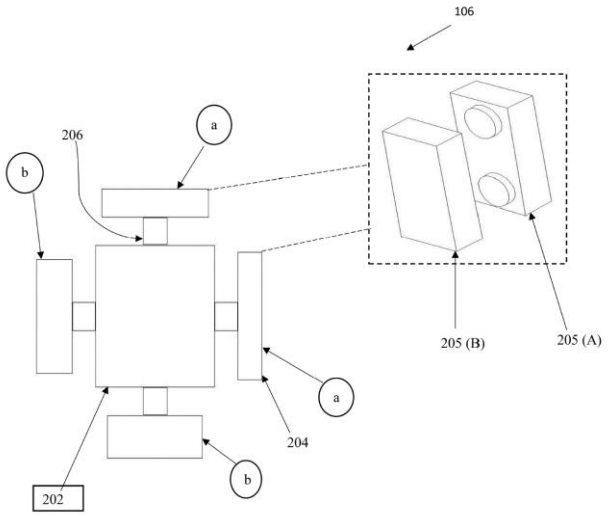

21: 2023/03472. 22: 2023/03/10. 43: 2023/03/30
51: G08B
71: Mirza Faizan
72: Mirza Faizan, Mohammed Abdussamad Zaki, Safiya Fatima, Afreen Fatima, Afrin Shaikh, Kemery Oparah, Maazin Saif, Mirza Rizwan, Amreen Syed, Hadiya Sameen, Aayan Chowdhury, Abdul Basit Piracha, Mishaal Qureshi, Abdullah Hasani, Zaynab Khan, Mariam Mir, Muhammed Mir
33: US 31: 17/940,060 32: 2022-09-08

54: AN IOT BASED MANAGEMENT SYSTEM AND A METHOD FOR ASSISTING USERS AROUND A SWIMMING POOL

00: -

The present disclosure envisages an IOT based management system for assisting users around a swimming pool. The system comprises a plurality of sensors configured to sense a plurality of parameters corresponding to various pre-defined events associated with said swimming pool; a control unit communicatively coupled to said plurality of sensors through a communication network to receive said plurality of parameters and configured to process said plurality of parameters based on at least one machine learning algorithm to generate actionable intelligence in the form of signals associated with said pre-defined events corresponding to said plurality of parameters; and at least one IOT based actuating mechanism configured to receive said signals and perform at least one action upon reception of said signals.

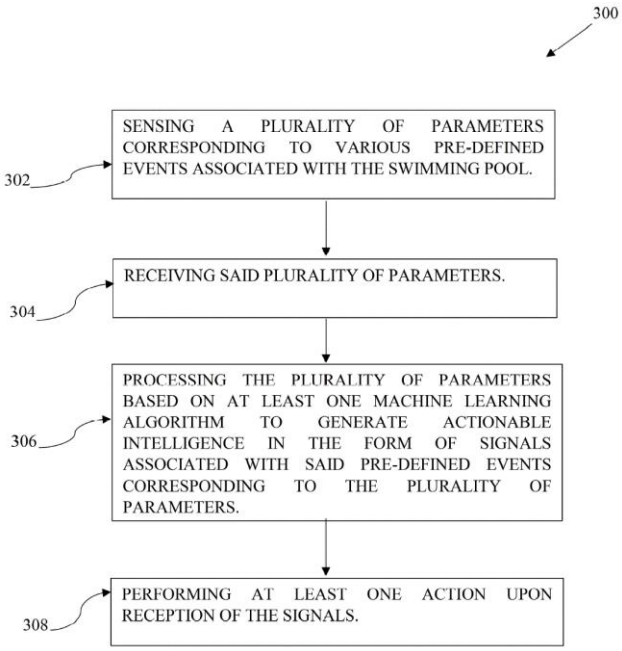

21: 2023/03517. 22: 2023/03/13. 43: 2023/03/30
51: E06B
71: Mirza Faizan
72: Mirza Faizan, Aarish Salman Bhojani, Nadia Anisa Sethuraman, Sofia Sethuraman, Raahi S Jogani, Zaid Marwat, Mirza Rizwan, Abdullah Hasani, Hisham Ahmad
33: US 31: 17/942,735 32: 2022-09-12
54: METHOD AND SYSTEM FOR PREVENTING INJURY BY FRIENDLY FIRE
00: -
A method for providing a smart monitoring device to determine at least one user as a team mate is provided. The method includes attaching, by a processor, a thermal signature emitting unit at one inner portion of the user's clothes, wherein the thermal signature emitting unit corresponds to a temperature signature of a metal insignia. Next, the method includes connecting, by the processor, an AI-based thermal camera module to a gun to detect data related to the thermal signature of the metal insignia. Further, the method includes comparing, by the processor, the data received from the AI-based thermal camera module with the patterns of the metal insignia stored in the database. Lastly, the method includes displaying, by a display unit, a red-cross symbol to the user if the data is matched, wherein the red-cross symbol symbolizes not to shoot.

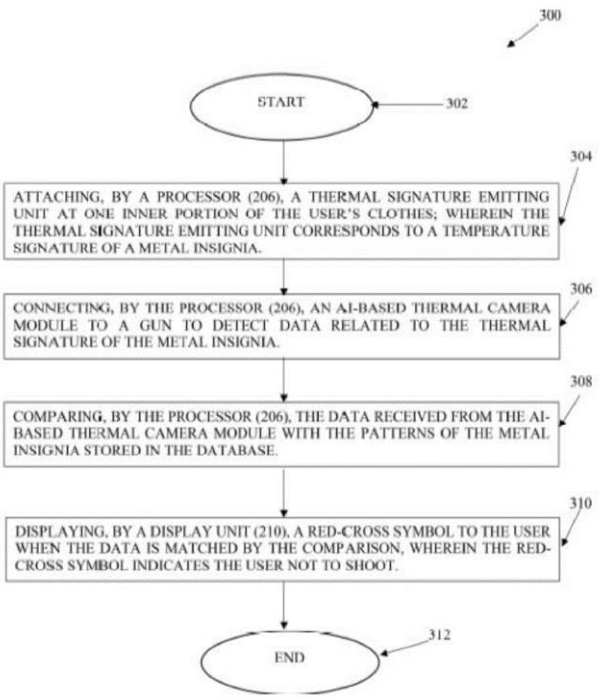

21: 2023/03518. 22: 2023/03/13. 43: 2023/03/30
51: B43L; F01N
71: Mirza Faizan
72: Mirza Faizan, Vedanth Venkatesh, Gabriel Bashir Khatri, Iffra Mehek Pathan, Saad Master, Rehan Sahir Ali, Zahra Shifa Khatri, Mirza Rizwan, Samad Syed, Darshan Kumar, Mishaal Qureshi, Abdullah Hasani, Zaynab Khan
33: US 31: 17/948,427 32: 2022-09-20
54: METHOD AND SYSTEM FOR PROVIDING A SMART WHITEBOARD CLEANER
00: -
A method to erase at least a certain amount of content presented on a whiteboard with a whiteboard cleaner is provided. The method includes uniformly dividing whiteboard screen into plurality of horizontal rows, wherein each row is configured with a switch button. The method includes selecting at least one switch button, by a user, to signify the certain amount of content that the user admires to erase. Further, the method includes receiving a command, by a transceiver, to automatically erase the certain amount of content selected by the user, wherein the command corresponds to an electronic signal configured with each switch button. The method further includes determining, by a processor, absence of the user for a predetermined time period, wherein based on determination, the system shuts

off the white board to restrict access of unknown person to view the content of the whiteboard.

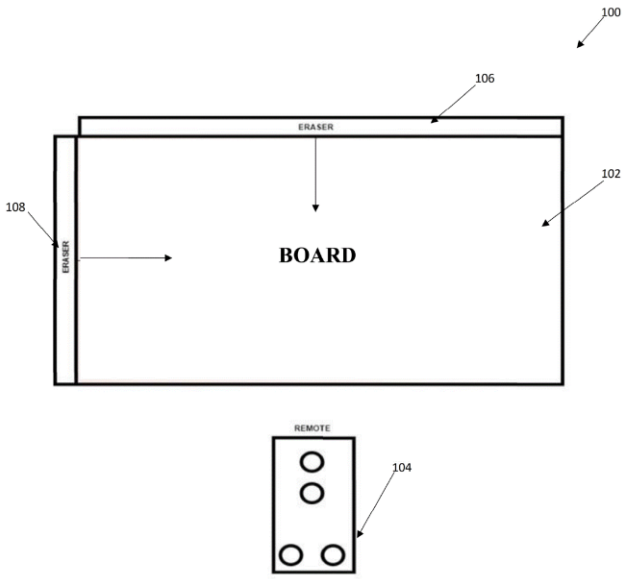

21: 2023/03519. 22: 2023/03/13. 43: 2023/03/30
51: A61L; B65D
71: Mirza Faizan
72: Mirza Faizan, Kimaya Rafiq Meherali
33: US 31: 17/976,894 32: 2022-10-31
54: A PERFUME DISPERSING DEVICE
00: -
Embodiments of the present disclosure provide a perfume dispersing device for dispersing a plurality of flavours of perfume. The perfume dispersing device comprises an input unit for receiving an input from a user indicating a selection of a flavour from a plurality of flavours of perfume. The perfume dispersing device further comprises a compressor for generating pressure in an air tank of the perfume dispersing device. The perfume dispersing device comprises a processor for selecting a perfume holder from a plurality of perfume holders included in the perfume dispersing device based on the input from the user. Each perfume holder of the plurality of perfume holders contains a specific flavour of the plurality of flavours of perfume. The air tank releases air pressure to the selected perfume holder. The perfume holder disperses the flavour indicated by the input from the user.

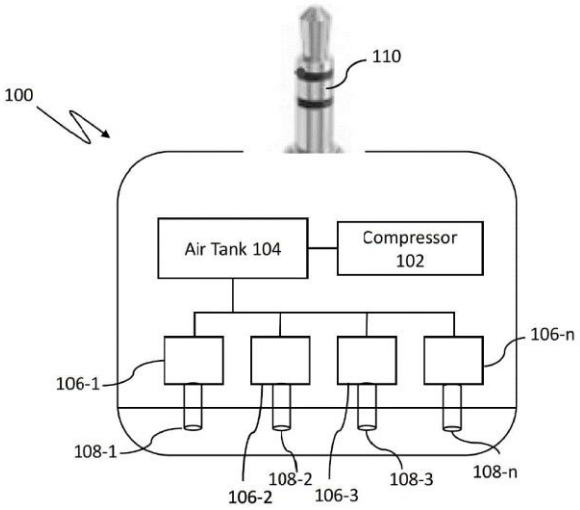

21: 2023/03520. 22: 2023/03/13. 43: 2023/03/30
51: D06F; G01N
71: Mirza Faizan
72: Mirza Faizan, Kimaya Rafiq Meherali
33: US 31: 17/993,091 32: 2022-11-23
54: A SYSTEM FOR DISPLAYING SELECTED CLOTHES ON A DUMMY HUMAN BODY
00: -
Embodiments of the present disclosure provide a system for provide experience to real time feel of trail of actual clothes to a user is disclosed. The system is utilized in online as well as physical stores. The system utilizes a camera communicatively coupled with a body scanner. The system is further communicatively coupled with a mobile device for providing details of the user. The mobile device may transmit a trigger to a body scanner after receiving an input from the user. The input indicates selection of a cloth from a plurality of clothes available in the store. After receiving the trigger from the mobile device, the body scanner may initiate the camera and determine details of the user. The mobile device may overlap the selected cloth on to a dummy user created using the details of the user.

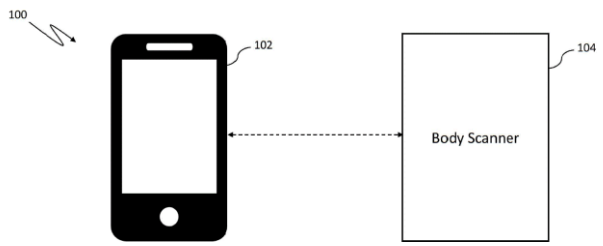

21: 2023/03575. 22: 2023/03/14. 43: 2023/03/27
51: B23K
71: CHINA NUCLEAR POWER ENGINEERING CO., LTD., SHANGHAI ROCKSENSOR AUTOMATION CO., LTD.
72: ZHONG, Wenbin, LI, Xiaotao, LIU, Qiao, LI, Yuwei, XUE, Lintao, SONG, Tiantao, WANG, Xujian
33: CN 31: 202210064183.8 32: 2022-01-20
54: WELDING SYSTEM AND WELDING CONTROL METHOD
00: -
The invention belongs to the technical field of welding, and particularly discloses a welding system and a welding control method, which are used for welding a first pipe fitting to a structural member and a groove is formed in the structural member. The welding system comprises a welding robot, a measuring device and a control device, and the measuring device is used for measuring first position information of the first pipe fitting and a first outline of the groove after the first pipe fitting and the structural member are pre-positioned; and the control device is configured to be capable of establishing a groove model according to the first position information and the first outline, calculating actual coaxiality data of the first pipe fitting, and determining a first welding process through analysis on the groove model and the actual coaxiality data in combination with target coaxiality data; and is configured to be capable of determining the first welding process through analysis on the groove model and the target coaxiality data, so that the welding robot completes efficient automatic welding of the first pipe fitting and the structural member, the deformation of the welded pipe fitting is reduced, and the welding precision is improved.

21: 2023/03667. 22: 2023/03/17. 43: 2023/03/29
51: C02F; G06Q
71: CHINA UNIVERSITY OF GEOSCIENCES, BEIJING
72: LIU Jianli, YAO Jun, ZHOU Deliang
54: SYSTEM AND METHOD FOR EVALUATING TAILINGS REMEDIATION EFFECT
00: -
The invention discloses a system and a method for evaluating tailings remediation and governance effect, which comprise the following steps: obtaining a fluorescent video stream of MOF-plant nano-hybrid organisms irradiated by an ultraviolet irradiation lamp by using a night vision camera, and transmitting the fluorescent video stream to an artificial intelligence computing processor by using the night vision camera; The artificial intelligence computing processor frames the fluorescent video stream into a plurality of fluorescent pictures, divides the fluorescent pictures, classifies the segmented fluorescent pictures, counts the proportion of the classification results of the pictures, and outputs the corresponding tailings remediation effect identification according to the statistical results. Through the acceptance evaluation module, the tailings remediation effect identification is accepted and evaluated, and the running data of the system is cached and sorted based on the cloud sharing module, uploaded and shared through the Internet, and shared and viewed through user login. The invention can realize intelligent and unmanned tailings remediation effect tracking and judgment, and the judgment result is refined, standardized and can be tracked for a long time.

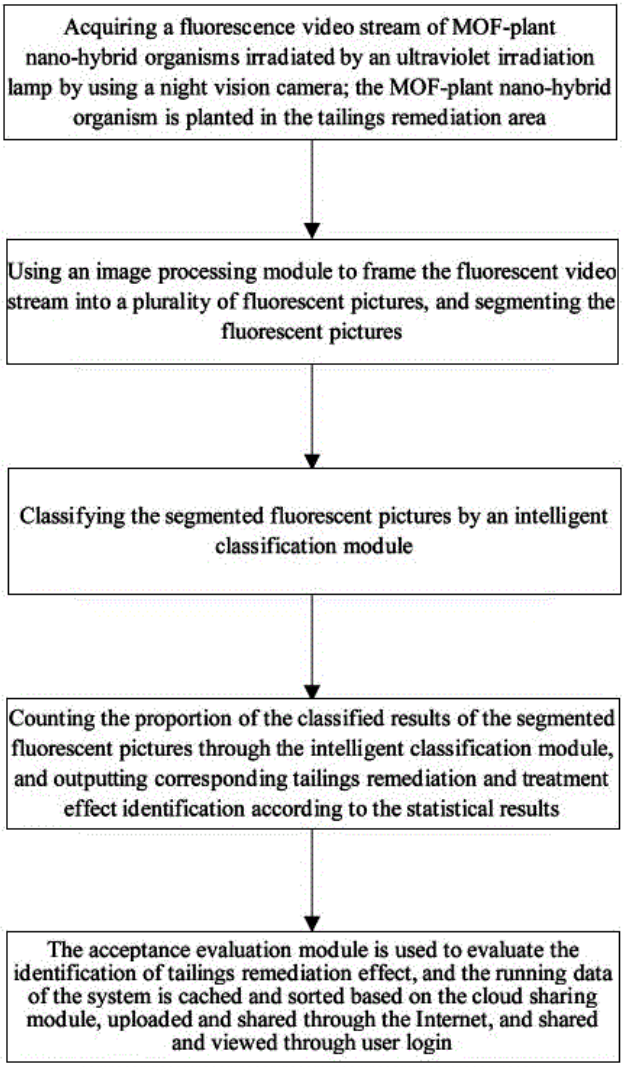

21: 2023/03704. 22: 2023/03/20. 43: 2023/05/10
51: A01G
71: DIPPERFOX OÜ
72: KÜLM, Jaana
33: EP 31: 20201655.6 32: 2020-10-14
54: STUMP CRUSHER
00: -
This invention includes a stump crusher used as an attachment for an excavator or some other digging machine or a forest harvester to mill the stumps of felled trees level with the ground. The stump crusher comprises interconnected and interacting assemblies including a hydraulic motor assembly on the side of the machine implement comprising a hydraulic motor housing, a hydraulic system necessary for controlling the hydraulic motor arranged in the hydraulic motor housing, a gearbox connected to the hydraulic motor and attached to the gearbox housing, to the lower end of which is attached a flange, to which is attached a blade holder of the stump crusher together with the blades of the stump crusher.

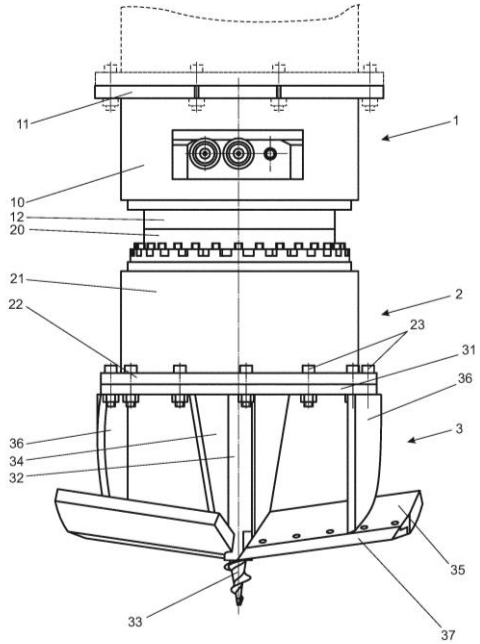

21: 2023/03728. 22: 2023/03/22. 43: 2023/05/10
51: H04L
71: Institute of Hydrobiology, Chinese Academy of Sciences
72: CHEN Jia
54: COMPUTER NETWORK EQUIPMENT OPERATION MONITORING DEVICE
00: -
The invention discloses a computer network equipment operation monitoring device, which comprises a case and a network element fixedly installed in the case, where a plurality of temperature sensors are fixedly installed on the network element, a plurality of damping bases are fixedly connected at the top and bottom ends of the network element respectively, and one end of the damping base far from the network element is fixedly connected with the inner wall of the case; the cooling circulating mechanism comprises a circulating power component and a circulating pipe, two ends of the circulating pipe are respectively communicated with the circulating power component, and the circulating pipe reciprocates and is arranged on both sides of the network element; the temperature sensor is electrically connected with the circulating power

component; the ventilation mechanism comprises a plurality of ventilation fans embedded in the case, and the temperature sensor is electrically connected with the ventilation fans. The invention has simple structure and convenient use, can monitor the running temperature of network elements, and automatically ventilate and cool the network elements through the ventilation mechanism and the cooling circulating mechanism, so as to ensure the normal operation of the network elements and avoid energy waste.

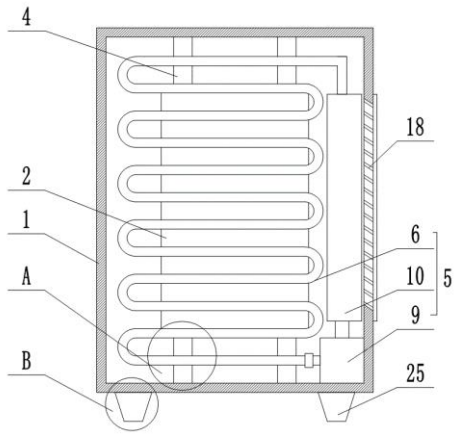

21: 2023/03800. 22: 2023/03/24. 43: 2023/04/05
51: A61K; A61P
71: ZUNYI MEDICAL UNIVERSITY
72: MA Xiaojuan, MA Yongyong, LI Yan, ZHANG Sanchen

54: TRADITIONAL CHINESE MEDICINAL COMPOSITION FOR PREVENTING AND TREATING TYPE I DIABETES AND ITS APPLICATION IN PREPARING MEDICINES OR MEDICATED DIET FOR PREVENTING AND TREATING TYPE I DIABETES

00: -

The invention belongs to the field of traditional Chinese medicine compositions, and in particular to a traditional Chinese medicine composition for preventing and treating type I diabetes and its application in preparing medicines or medicated diets for preventing and treating type I diabetes. In the application provided by the invention, the traditional Chinese medicinal composition is prepared from the following raw materials: ginseng, Rhizoma Atractylodis Macrocephalae, Poria, Radix Ophiopogonis, Dendrobium candidum, Tortoise shell, Fructus Lycii, Radix Trichosanthis, Anemarrhena, Radix Paeoniae Rubra, Salivia chinensis, Rhizoma Dioscoreae, Radix Astragali seu Hedysari, Cortex Lycii, stir-fired Fructus Crataegi and meat. The traditional Chinese medicine composition provided by the invention may effectively prevent the occurrence of type I diabetes by weakening the damage of islet beta cells, reducing the blood sugar level in the occurrence period of type I diabetes and improving the blood sugar concentration regulation ability.

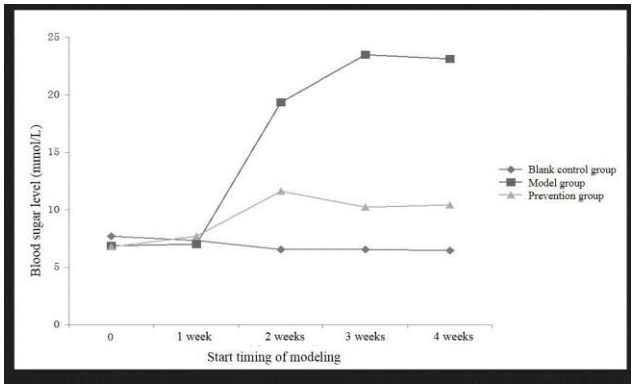

21: 2023/03804. 22: 2023/03/24. 43: 2023/04/05
51: C02F
71: FUDAN UNIVERSITY, FUHUAN QINGYUN TECHNOLOGY (ZHEJIANG) CO., LTD
72: ZHENG Zheng, WANG Zhikai, HUANG Suzhen, CHEN Yican, HUANG Haiqing, LUO Xingzhang

54: ECOLOGICAL METHOD FOR REMEDIATION OF HEAVY METAL POLLUTION IN WATER BODIES

00: -

Disclosed is an ecological method for restoring heavy metal pollution in water bodies, and relates to the technical field of environmental ecological engineering. Disclosed is an application of a modified humic acid in improving a remediation effect of Vallisneria natans on heavy metals in water bodies, and a remediation of heavy metals in water bodies is to reduce a content of heavy metals in water bodies by planting Vallisneria natans. By adding the humic acid, the chlorosis of the leaves of Vallisneria natans under the toxicity of heavy metals may be slowed down, the accumulation of heavy metals by the leaves and roots of Vallisneria natans may be increased; meanwhile, the leaching ability of heavy metals in water may be reduced, the enzyme activity related to active oxygen metabolism in plants may be enhanced by stimulating the synthesis of protein and enzymes in various organs of plants, the MDA concentration in plants may be reduced, the

active oxygen content in plants may be adjusted, membrane lipid peroxidation may be reduced, and the resistance of plants to heavy metals may be enhanced.

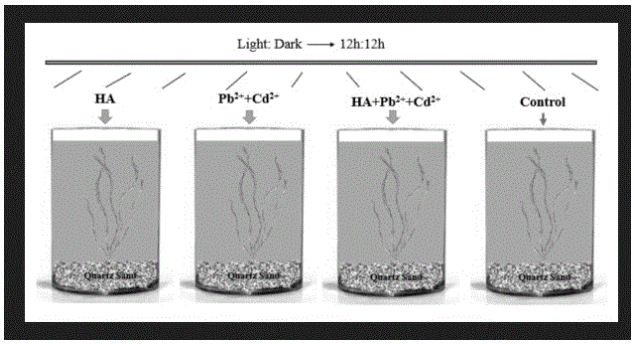

21: 2023/03805. 22: 2023/03/24. 43: 2023/04/05
51: C12N; C12Q
71: THE THIRD AFFILIATED HOSPITAL OF GUANGZHOU MEDICAL UNIVERSITY
72: HONG Honghai, YIN Ping, XIA Yong
54: METHOD OF GENE SITE-DIRECTED MUTATION AND APPLICATION THEREOF
00: -
The invention provides a method of gene site-directed mutation and its application, belonging to the field of biotechnology. According to the invention, In-Fusion PCR technology and primer mutation are used for in-vitro site-directed mutation of target genes, which can be used for mutation of various gene sites, changing nucleotide sequences to obtain mutant genes, and studying the relationship between the structure and the function of genes; besides, mutant protein can be obtained by changing specific amino acids, the structure and the function of protein can be studied, and the regulation mechanism of genes in normal state and the cause and mechanism of diseases can be clarified from a microscopic level.

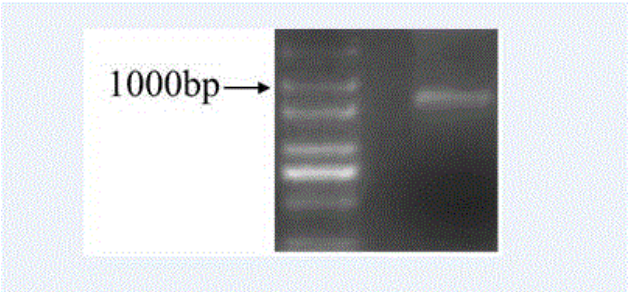

21: 2023/03844. 22: 2023/03/27. 43: 2023/04/05
51: A61K; A61P
71: WUXI NO. 2 PEOPLE'S HOSPITAL
72: YANG Jiechao
33: CN 31: 202211539730X 32: 2022-12-02
54: APPLICATION OF FKBP11 PROTEIN OR CODING GENE IN PREPARING MEDICINES FOR TREATING LARYNGEAL SQUAMOUS CELL CARCINOMA
00: -
The invention discloses an application of FKBP11 protein or coding gene in preparing medicines for treating laryngeal squamous cell carcinoma, and belongs to the technical field of biomedicine. According to the prediction analysis of tumor bioinformatics, it is found that the expression of FKBP11 in head and neck squamous cell carcinoma tissues is significantly higher than that in normal tissues near the cancer. A lentiviral vector interfering with FKBP11 gene is constructed by RNA interference technology, and the lentiviral vector is transfected into laryngeal squamous cell carcinoma cell line. In vitro experiments confirm that interfering FKBP11 gene could inhibit the proliferation and metastasis of laryngeal squamous cell carcinoma cell line. The functional recovery experiment shows that FKBP11 can promote the proliferation and migration of laryngeal cancer cells, inhibit the apoptosis of laryngeal squamous cell carcinoma cells, and promote the G1/S phase of the cells, thus promoting the occurrence and development of laryngeal squamous cell carcinoma.

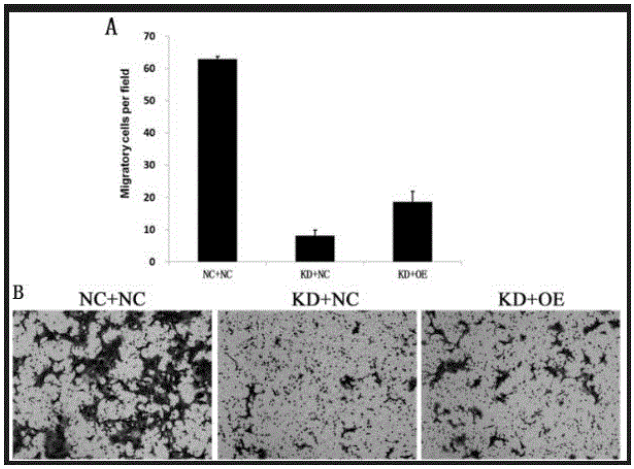

21: 2023/03886. 22: 2023/03/28. 43: 2023/04/11
51: G06Q
71: SHANGHAI JIAO TONG UNIVERSITY
72: YE, Huili, LIN, Anni, WEN, Shuli, ZHU, Miao, LIANG, Kejing, MA, Jianjun
33: CN 31: 202211262984.1 32: 2022-10-14

54: METHOD AND SYSTEM FOR OPTIMIZING ELECTRIC SHIP VOYAGE BASED ON STATE OF CHARGE ESTIMATION OF LITHIUM BATTERY

00: -

The present invention provides a method and system for optimizing an electric ship voyage based on state of charge estimation of a lithium battery, including: step S1: establishing a lithium-battery energy-storage system model driven by hybrid of data and physics; step S2: identifying a lithium-battery energy-storage system model parameter using a least square method; step S3: performing state of charge estimation of the lithium battery based on the lithium-battery energy-storage system model after the parameter identification using unscented Kalman filter method; and step S4: optimizing the electric ship voyage based on the state of charge estimation of the lithium battery using a particle swarm optimization method, where the lithium-battery energy-storage system model is a second-order equivalent model established according to Davinin theorem based on charge and discharge characteristics of shipboard lithium battery energy storage.

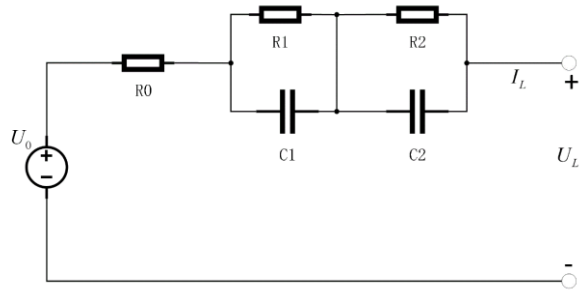

21: 2023/03887. 22: 2023/03/28. 43: 2023/04/11
51: A01C
71: Huaihua University
72: HUANG, Hui, SONG, Songquan, YU, Shuangni, WU, Xianjin
33: CN 31: 2022106765016 32: 2022-06-15

54: METHOD FOR PROMOTING GERMINATION OF AKEBIA TRIFOLIATA SUBSP.AUSTRALIS SEEDS AND METHOD FOR PROMOTING GROWTH OF SEEDLINGS OF AKEBIA TRIFOLIATA SUBSP.AUSTRALIS

00: -

The present invention belongs to the technical field of germination and planting of plant seeds, and particularly relates to a method for promoting germination of Akebia trifoliata subsp.australis seeds and a method for promoting growth of seedlings of Akebia trifoliata subsp.australis. The present invention provides a method for promoting germination of Akebia trifoliata subsp.australis seeds, and results show that after seed coats of fresh Akebia trifoliata subsp.australis seeds are removed, the time when the seeds start to germinate is advanced to the fourth day. Under a condition of 20degrees Celsius, the germination percentage of the Akebia trifoliata subsp.australis seeds without the seed coats is 90 percent, that of the whole-grain Akebia trifoliata subsp.australis seeds is 50.67±2.07 percent, and that of the half-grain Akebia trifoliata subsp.australis seeds is 58.33±2.58 percent. The present invention provides the method for promoting germination of Akebia trifoliata subsp.australis seeds.

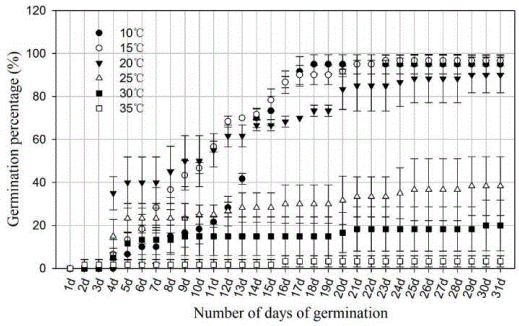

21: 2023/03888. 22: 2023/03/28. 43: 2023/04/11
51: A01C
71: Huaihua University
72: HUANG, Hui, HU, Xiangwei, WU, Xianjin
33: CN 31: 2022114708903 32: 2022-11-23

54: PLANT SEED PRIMER, PREPARATION METHOD AND APPLICATION

00: -

The present invention provides a plant seed primer, a preparation method and an application, and belongs to the technical field of plant physiology. The plant seed primer includes the following components: nano-zinc oxide, cytokinin, trehalose, sodium nitroprusside and betaine. The plant seed primer is used for priming plant seeds, particularly Lactuca sativa L. seeds or lettuce seeds, which can effectively remove thermodormancy of the plant seeds and improve the germination percentage and the germination potential of the plant seeds in a high-temperature germination environment. The

plant seed primer is easily and conveniently operated.

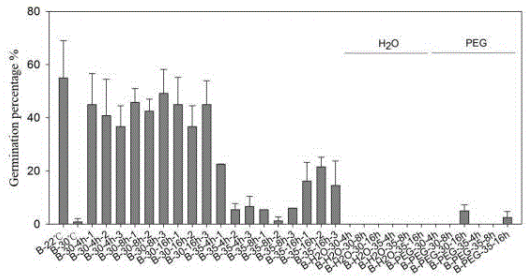

21: 2023/03890. 22: 2023/03/28. 43: 2023/04/05
51: A61H
71: NINGBO KANGNING HOSPITAL (NINGBO CENTER FOR MENTAL DISEASE PREVENTION AND CONTROL)
72: YU Haihang, YU Chang, ZHOU Dongsheng, ZHOU Qi, LI Xingxing

54: HELMET FOR TREATING INSOMNIA
00: -
The invention relates to a helmet for treating insomnia, which comprises a helmet and is characterized by also comprising a binding belt positioned on the helmet for binding the head of a user and keeping relatively fixed with the helmet; there are two earmuffs, which are symmetrically connected to the two sides of the helmet and correspond to the position of the user's ears through telescopic belts, and can cover the temporal lobe area of the user's head, and the electrode part is located above the earmuffs, which are connected with the earmuffs through electrode connectors, and a cushion arranged inside the helmet. The electrode part arranged on the helmet is stimulated by transcranial electrical stimulation when the temporal lobe area, forehead area and mastoid areas on both sides are stimulated by 40-77.5 Hz alternating current. It has a specific effect on treating insomnia. At the same time, the cushion arranged in the helmet can be used to increase the contact area between the helmet and the user's head, so as to reduce the pressure of the helmet on the user's head and improve the comfort when the user's head contacts the helmet.

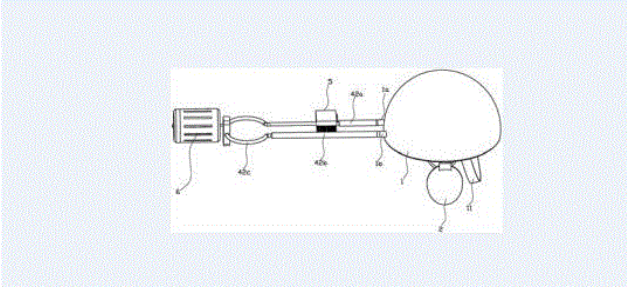

21: 2023/03891. 22: 2023/03/28. 43: 2023/04/05
51: A23L; A61K; A61P
71: ANHUI SCIENCE AND TECHNOLOGY UNIVERSITY
72: ZHANG Xinyong, LU Jiawen, CHENG Xin, WU Xiaoyu, HE Xinyi, LI Guangrui, GUO Zhenchao, DOU Jinfeng, WANG Haibo
33: CN 31: CN202211418423.6 32: 2022-11-14
54: DOUBLE MELON SPLEEN-BOOSTING DISPERSING AGENT AND ITS PREPARATION METHOD
00: -
The invention disclose a double melon spleen-boosting dispersing agent and a preparation method thereof, and relates to that field of health food. the double melon spleen-boosting dispersing agent is formed by mixing a waxgourd peel extract, a fingered citron extract and poria cocos powder obtained by percolation, and the specific component raw materials and the mass ratio are as follows: the waxgourd peel extract: the fingered citron extract: poria cocos is 3-5: 3-5: 1. The double melon spleen-boosting dispersing agent prepared by the invention has good effects of strengthening spleen, nourishing stomach and promoting digestion.

21: 2023/03919. 22: 2023/03/29. 43: 2023/05/10
51: A01H
71: Huzhou Agricultural Science and Technology Development Center, Zhejiang Academy of Agricultural Sciences
72: REN, Yun, LI, Lupeng, DING, Fuquan, FENG, Zhongping, ZHU, Jianfang, HUA, Shuijin, LIN, Baogang, HAO, Pengfei, HU, Hao, LOU, Weidong
54: IMPROVEMENT METHOD FOR IMPROVED BRASSICA NAPUS RAPHANUSSATIVUS CYTOPLASMIC MALE STERILE RESTORER LINE
00: -
Disclosed is an improvement method for an improved brassica napus raphanussativus cytoplasmic male sterile restorer line. The improvement method specifically includes: crossing

a brassica napus Ogura cytoplasmic male sterile (CMS) line and a brassica napus Ogura CMS restorer line to obtain F1-generation seeds; irradiating the F1-generation seeds, and sowing the F1-generation seeds to obtain F1-generation plants; crossing the brassica napus Ogura CMS line and the F1-generation plants to obtain seeds, sowing the seeds, investigating cold resistance in winter and spring, and selecting anti-freezing individual plants having excellent economic traits in a flowering period for selfing to obtain progeny plants; and carrying out molecular marker assisted selection on the progeny plants to obtain the improved brassica napus Ogura CMS restorer line. According to the present invention, molecular markers are removed, the improved restorer line is obtained, and the improved restorer line has excellent agronomic traits and a higher grain yield.

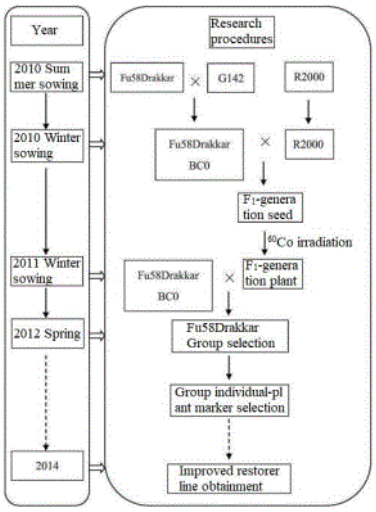

21: 2023/03922. 22: 2023/03/29. 43: 2023/04/11
51: H02G
71: THE FIRST CONSTRUCTION ENGINEERING COMPANY LTD. OF CHINA CONSTRUCTION SECOND ENGINEERING BUREAU, CHINA CONSTRUCTION SECOND ENGINEERING BUREAU LTD.
72: Guoqing SUN, Xiaohui ZHANG, Wenlong LIU, Yuanliang LIU, Liangliang WANG, Peng ZHANG, Chuangui WU, Hongshu REN, Chenglong LU, Qiuhe YE
33: CN 31: 202220722036.0 32: 2022-03-30
54: A HORN MOUTH TEE BEND BRIDGE FRAME STRUCTURE CONNECTING PIECE
00: -

Aspects of the disclosure provide a horn mouth tee bend bridge frame structure connecting piece comprising a connecting piece body. One end of the connecting piece body is provided with a horn mouth, two sides of the horn mouth are respectively provided with a first side bolt hole, and a bridge frame to be connected is provided with a cut opening, and two second side bolt holes corresponding to the first side bolt holes are opened on both sides of the cut opening, and a bottom plate of the connecting piece body extends outward to form an extension portion, which exceeds the area of the horn mouth being positioned, the extension portion is provided with a first bottom bolt hole, a bottom of the cut opening is provided with a second bottom bolt hole corresponding to the first bottom bolt hole, the first side bolt holes are connected to the second side bolt holes by bolts, and the first bottom bolt holes and the second bottom bolt holes are connected by bolts.

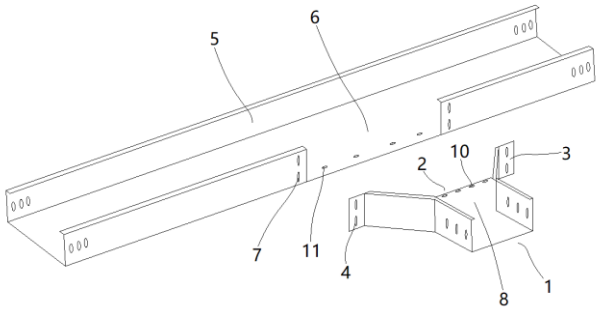

21: 2023/03930. 22: 2023/03/29. 43: 2023/04/11
51: E04G
71: THE SECOND CONSTRUCTION ENGINEERING COMPANY LTD. OF CHINA CONSTRUCTION SECOND ENGINEERING BUREAU
72: MENG, Fulei, LI, Xiong, ZHANG, Yao, SHI, Gaofei, XIN, Guanjie
54: CONCRETE STRUCTURE CURING DEVICE
00: -
The present invention relates to the technical field of concrete structure curing and discloses a concrete structure curing device. The concrete structure curing device includes a bottom plate, water, a first water pump and a first water pipe, wherein a left end of an upper surface of the bottom plate is fixedly connected to a motor and a sliding bar; an end of the sliding bar away from the bottom plate is fixedly connected to a top plate; an output end of an upper

surface of the motor is fixedly connected to a lead screw; an outer surface of the lead screw is in threaded connection with a movable block; an outer surface of the movable block is fixedly connected to an arc-shaped water storage tank body; a first nozzle is mounted on an inner wall of the arc-shaped water storage tank body; a lower surface of the arc-shaped water storage tank body is provided with a water supply pipe; an internal accommodation cavity at one end of the first water pipe away from the first water pump communicates with an internal accommodation cavity of the water supply pipe; a right end of the upper surface of the bottom plate close to a water tank is fixedly connected to a first water pump; and the end of the second water pipe away from the second water pump is provided with a second nozzle. By matching the above structures, the concrete structure curing device can spray water to concrete pouring structures with different heights and different types for curing, so that the curing flexibility is improved.

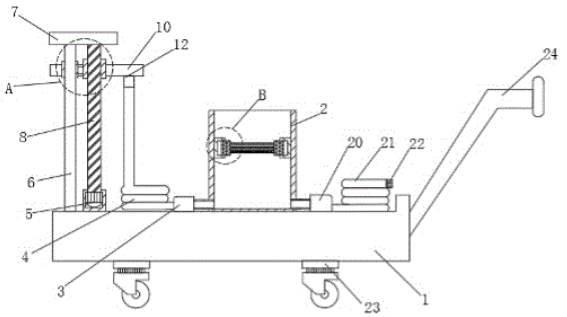

21: 2023/03945. 22: 2023/03/29. 43: 2023/04/11
51: G01R
71: WEST ANHUI UNIVERSITY
72: WU, Congbing, ZHOU, Hongxia
33: CN 31: 202210489165.4 32: 2022-05-06
54: LIMIT DEVICE FOR DETECTING MOTOR FAULT OF CAR
00: -
The present invention belongs to the field of motor fault detection, and discloses a limit device for detecting a motor fault of a car, the limit device including a workbench. A clamping mechanism is arranged on the workbench. The clamping mechanism includes two clamping plates slidably connected to the workbench. A first rack is fixed to lower ends of the two clamping plates, respectively. A drive device is fixed to a lower end of the workbench. A first gear is fixed to a drive shaft of the drive device, and the first gear is located between the two first racks and simultaneously meshed with the two first racks. By controlling operation of the drive device, the two clamping plates can slide synchronously and reversely, so that a motor can be clamped and fixed.

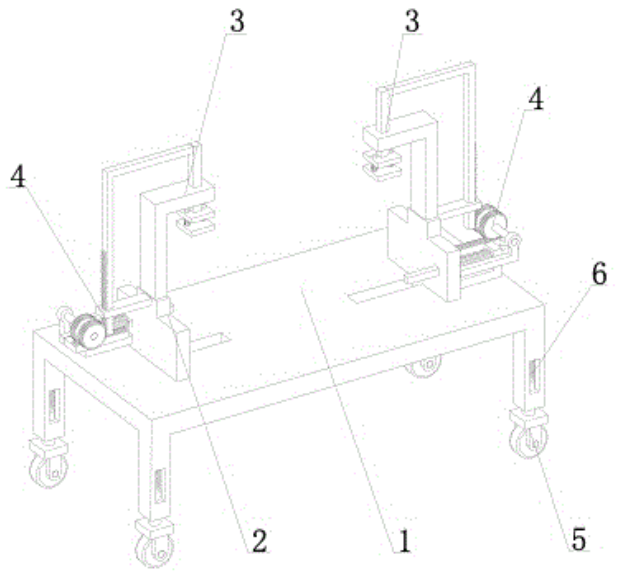

21: 2023/03948. 22: 2023/03/29. 43: 2023/04/17
51: F25B; F28C
71: BEIJING JINGKELUN ENGINEERING DESIGN AND RESEARCH INSTITUTE CO., LTD.
72: YANG, Jianguo, ZHOU, Chengjun, XIE, Weibo, WANG, Quanjiang, KANG, Jianhui, ZHANG, Jilong, ZHAO, Hui, HAO, Lixuan, MAO, Tongqin, CAO, Wenjie, CHAO, Haiying, LI, Junzeng
33: CN 31: 202011021378.1 32: 2020-09-25
54: THREE-DIMENSIONALLY DISTRIBUTED LIQUID ATOMIZATION HEAT EXCHANGER, CONTROL METHOD THEREOF, REFRIGERATION SYSTEM, AND AIR CONDITIONER
00: -
A three-dimensionally distributed liquid atomization heat exchanger, comprising a housing (1), an air extraction device (2), a heat exchange device (3) and a liquid atomization device. The air extraction device (2) is used for forming negative pressure in the housing (1). The liquid atomization device comprises a liquid supply pipe, atomization discharge pipes (4) and atomization heads (5). The atomization discharge pipes (4) are connected to the liquid supply pipe. The atomization heads (5) are arranged on the atomization discharge pipes (4).

The atomization discharge pipes (4) are three-dimensionally distributed in the housing (1). Control devices are arranged on the atomization heads (5) to control the atomization heads (5) to be opened or closed. The control devices are connected to a control center which can, according to a preset time, a preset percentage of the atomization heads (5) which are open and a randomization function, select randomly the atomization heads (5) to be opened or closed. Each of the atomization heads (5) is opened or closed randomly such as atomized liquid is uniformly distributed in the housing.

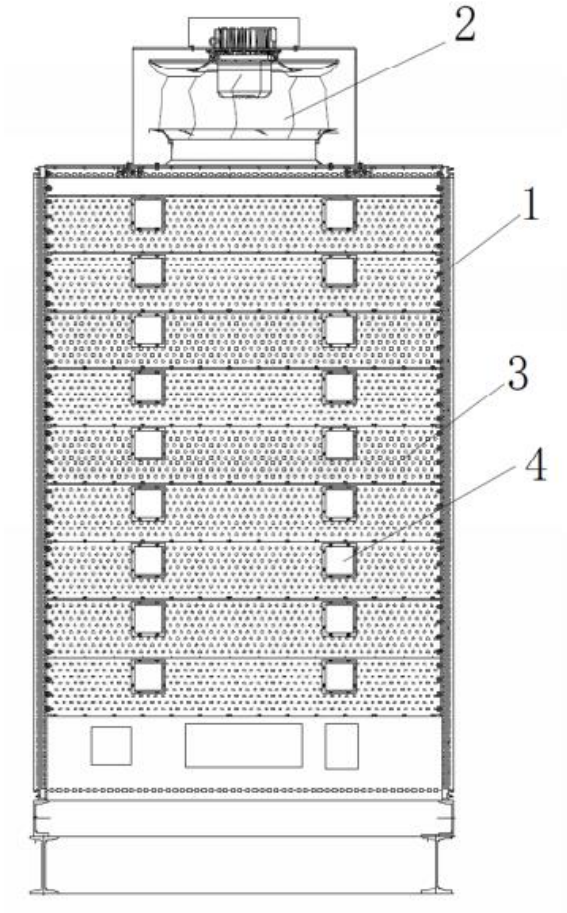

21: 2023/03969. 22: 2023/03/29. 43: 2023/04/17
51: B22F; B28D; C22C
71: XIAMEN HONGLU TUNGSTEN MOLYBDENUM INDUSTRY CO., LTD.
72: TANG, Minfeng, PENG, Fusheng, GUO, Donghong, FANG, Yijin, LV, Sheng, YAO, Tongkai, WU, Xianyue, ZHANG, Weibing, TU, Qijian
33: CN 31: 202110077980.5 32: 2021-01-20

54: ALLOY WIRE ROD AND PREPARATION METHOD AND APPLICATION THEREOF
00: -
The present disclosure relates to the technical field of tungsten alloy materials, and in particular to an alloy wire rod and a preparation method and application thereof. The alloy wire rod is made of a tungsten alloy, and the tungsten alloy contains tungsten and an oxide of cerium. The alloy wire rod has a wire diameter of equal to or less than 100 µm; and the alloy wire rod has a tensile strength of greater than 3,800 MPa. The wire diameter of the alloy wire rod is equal to or less than 60 µm; the diameter of a push-pull core wire of the alloy wire rod is less than 350 µm; the elastic ultimate strength of the alloy wire rod is greater than 2,500 MPa; and the tensile strength of the alloy wire is greater than 4,200 MPa. In the present disclosure, the alloy wire rod having ultra-high strength and good toughness is obtained by doping an oxide of cerium.

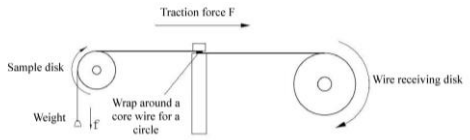

21: 2023/03984. 22: 2023/03/30. 43: 2023/04/11
51: A01N; C12N; C12R; A01P
71: Institute of Plant Protection, Henan Academy of Agricultural Sciences
72: LI, Tong, GONG, Zhongjun, WU, Yuqing, JIANG, Yueli, FAN, Zhiye, HAN, Ruihua, ZHANG, Gaiping, MIAO, Jin, DUAN, Yun

54: AGROTIS IPSILON NORA VIRUS FOR PREVENTING AND CONTROLLING LEPIDOPTERAN PESTS AND APPLICATION THEREOF
00: -
Disclosed are an Agrotis ipsilon Nora virus for preventing and controlling lepidopteran pests and application thereof. The whole genome sequence of the virus is as shown in SEQ ID NO. 1. Phylogenetic analysis shows that the virus is a new Nora virus, named as the Agrotis ipsilon Nora virus and called AINV for short. The AINV is transfected with an lepidopteran pest population, and influence of the AINV on fitness of the lepidopteran pests is analyzed. Results show that AINV infection reduces the fitness of the lepidopteran pests, which is mainly manifested in reducing a pupal weight, prolonging a

pupal stage, reducing a pupation rate, significantly prolonging a larval stage of the lepidopteran pests, and reducing an eclosion rate of adults. These results indicate that the AINV is a potential virus resource which can be used for biological control of the lepidopteran pests.

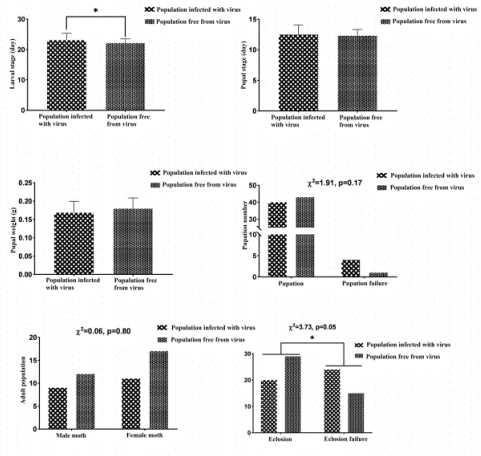

21: 2023/03995. 22: 2023/03/30. 43: 2023/04/05
51: H02P
71: HUNAN INSTITUTE OF ENGINEERING, CHONGQING UNIVERSITY OF SCIENCE AND TECHNOLOGY
72: HUANG Zhonghua, XIE Ya, XU Yangyang, DING Jin
33: CN 31: 202210398426.1 32: 2022-04-15
54: DUAL-MOTOR PERFORMANCE SYNCHRONOUS TEST DEVICE
00: -
The invention discloses a dual-motor performance synchronous test device, which comprises a power supply, a power coupling device, a generator, an energy accumulator and a controller; the electric energy output end of the power supply is connected with the electric energy input end of the first test motor, the first power input end of the power coupling device is connected with the power output end of the first test motor, the second power input end of the power coupling device is connected with the power output end of the second test motor, the power output end of the power coupling device is connected with the power input end of the generator; the electric energy input end of the energy accumulator is connected with the electric energy output end of the generator, the electric energy output end of the energy accumulator is used to connect with the electric energy output end of the second test motor, and the signal end of the controller is used to connect with the signal ends of the first test motor and the second test motor respectively. The invention can effectively reduce the number of loaders, realize the performance test of two motors at the same time, improve the test efficiency and reduce the test energy consumption.

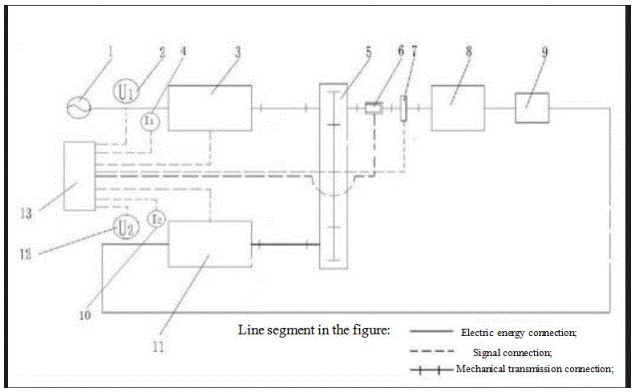

21: 2023/03997. 22: 2023/03/30. 43: 2023/04/11
51: H04N
71: Zhang Xuan, Weng Gengjia, Wang Yuanyuan
72: Zhang Xuan, Weng Gengjia, Wang Yuanyuan
54: A DESIGN ASSISTANT SYSTEM BASED ON XR AND IMAGE GENERATION TECHNOLOGY
00: -
The present invention is a design assistance system based on XR and image generation technology, comprising: an image acquisition unit, an original picture of a body and a scene; an image processing unit, processing said original picture to generate a line image corresponding to the original picture; a projection display unit, obtaining the current height of the system and the size of a standard target paper, calculating the line image observed by the user through said display on the target paper the projection relationship of the line image on the target paper, and displaying the line image generated by the image processing unit in the XR glasses display in the projection display unit, so that when the user observes the target through the display, he or she obtains a virtual line drawing of said original picture.

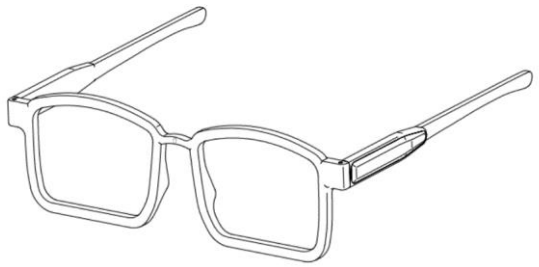

21: 2023/03998. 22: 2023/03/30. 43: 2023/04/11
51: G06T
71: Weng Gengjia, Zhang Xuan, Wang Yuanyuan
72: Weng Gengjia, Zhang Xuan, Wang Yuanyuan
54: AN IMAGE GENERATION METHOD BASED ON GAN NEURAL NETWORK AND WEIGHTED AVERAGE IMAGE OPTIMIZATION TECHNIQUE
00: -
The present application provides an image generation method based on GAN neural network and weighted average image optimization technology, mainly based on the vector model and 3D model, and the generated image is applied to the training of mechanical learning and the detection accuracy of the image. The method consists of generating the background image generator and the image selection unit from the background image generator and the image selection unit; and, making the detection image corresponding to the model, to achieve at least one foreground element corresponding to at least one foreground image based on the final image determination process, and converting the background image into one image into a definite style.; Based on the final image optimization process, the weighted average image generation method using a fusion of various image technologies, such as generating adversarial network (GAN) model, is used to achieve higher quality image generation and make the picture more realistic. Therefore, in the process of user use, a kind of innovative generation effect to meet the required background pictures of the characters is realized, and the user experience is improved.

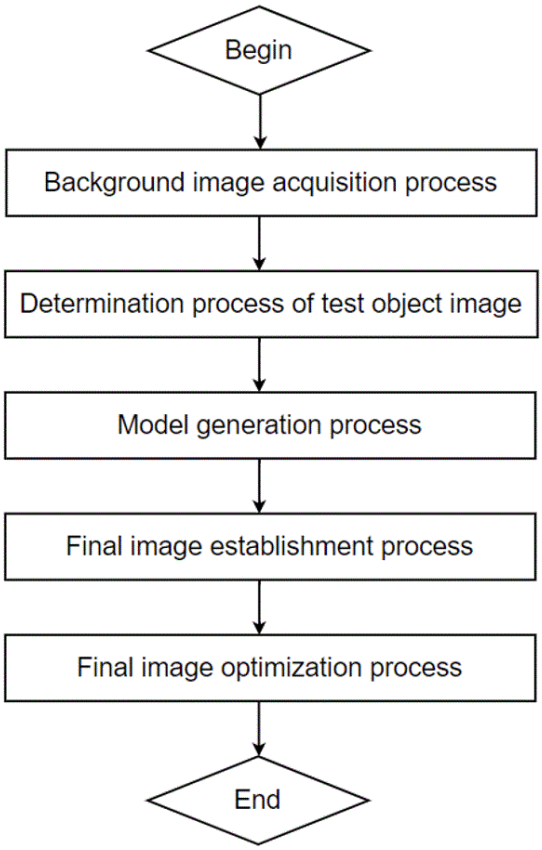

21: 2023/04082. 22: 2023/04/03. 43: 2023/04/11
51: H05H
71: Huzhou Institute of Zhejiang University
72: Bingwen YU, Yiwen BAI, Wei JIN, Haoze WEI, Dengjie YU
33: CN 31: 2022108422218 32: 2022-07-18
54: COMPOSITE FIELD MODULATED MICROWAVE COLD PLASMA JET DEVICE
00: -
The present invention provides a composite field modulated microwave cold plasma jet device, including a cavity portion, a microwave coupling portion, a tuning portion, and an electric field modulation portion. The cavity portion is of a coaxial resonant cavity structure with one open end, and a microwave transmission mode is a TEM mode. The microwave coupling portion may couple microwave energy to the cavity portion by means of conductive coupling, capacitive coupling, magnetic field coupling, etc. The electric field modulation portion is implemented by an inner electrode that applies a nanosecond pulse (or a DC voltage). The present invention provides, based on characteristics of small ozone generation amount, higher plasma

concentration, richer excited state particles and easier formation of a long straight cold plasma by the nanosecond pulse (or a DC), a composite field modulated cold plasma jet, that is, an auxiliary electric field is applied to a microwave cold plasma, and charged particles are pulled by the auxiliary electric field to move in an accelerated manner, so as to prolong the jet length.

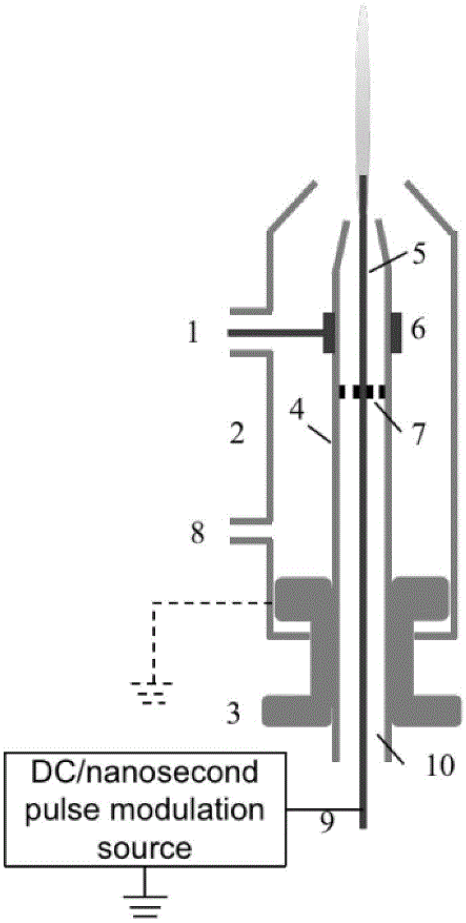

21: 2023/04088. 22: 2023/04/03. 43: 2023/04/11
51: C09K
71: Dalian University of Technology
72: ZHANG Zhichao, WANG Ziqian, SONG Ting
54: PHENYLE KETONE COMPOUNDS OR DERIVATIVES THEREOF WITH FLUORESCENCE LUMINESCENT PROPERTIES
00: -
A class of phenyle ketone compounds or derivatives thereof with fluorescence luminescent properties, belonging to the technical field of fluorescent labeling. The compounds include a 6-(4-substituted piperazinyl) phenyle ketone compound and a 6-(1-substituted triazole-4-methylamino) phenyle ketone compound. These compounds competitively bind and antagonize Bcl-2 and Mcl-1 proteins in vitro and in vivo, thus inducing apoptosis and being used as anticancer compounds; in addition, the derivatives based on them may be used as bifunctional molecules to detect the expression level, temporal and spatial distribution and other biological information of the target proteins. And the application of these compounds as molecular tools for in-situ visualization and in-situ screening of inhibitors are of great significance for early clinical diagnosis, disease development and effective treatment.

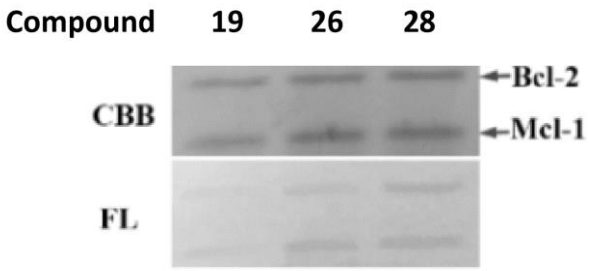

21: 2023/04158. 22: 2023/04/05. 43: 2023/04/13
51: E02B
71: China Construction Second Engineering Bureau Shenzhen Construction Investment Development Co., Ltd., THE FIRST CONSTRUCTION ENGINEERING COMPANY LTD. OF CHINA CONSTRUCTION SECOND ENGINEERING BUREAU
72: Bentao ZHANG, Jing LI, Yichen LI, Tao ZHOU, Lei ZOU
33: CN 31: 202220837708.2 32: 2022-04-08
54: WATER STACKING STRUCTURE FOR WATER CHANNEL
00: -
The present invention discloses a water stacking structure for water channel, which relates to the technical field of garden construction and comprises a step assembly, a baffle plate, a lower side wall and a top side wall. The baffle plate is arranged between the lower side wall and the top side wall. Multiple step assemblies are arranged on the baffle plate, and the step assemblies are arranged above the lower side wall at intervals; the baffle plate and the top side wall are in angled connection to form a water inlet; the baffle plate and the lower side wall are in angled connection to form a water outlet; the

step assembly comprises a plurality of steps which extend towards the lower side wall and are sequentially connected from high to low. Water flow sequentially flows through the steps which are sequentially connected from high to low from the water inlet to form step-shaped water flow, and the step-shaped water carrying a large amount of oxygen in air flows to the water outlet from the steps and then flows out of the water outlet to enter an irrigation canal, so that the oxygen content of irrigation water is increased, and the irrigation quality is improved.

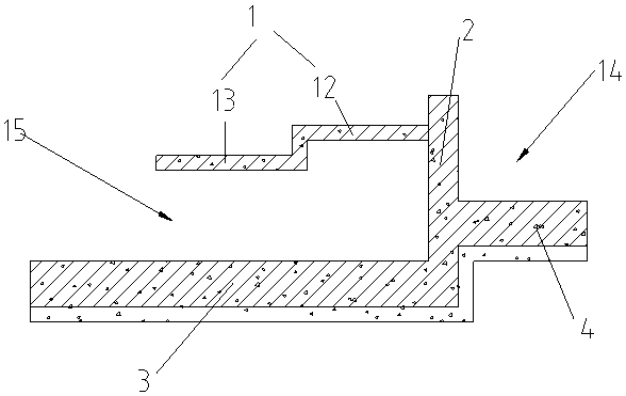

21: 2023/04159. 22: 2023/04/05. 43: 2023/04/13
51: G01B
71: China Construction Second Engineering Bureau Shenzhen Construction Investment Development Co., Ltd., THE FIRST CONSTRUCTION ENGINEERING COMPANY LTD. OF CHINA CONSTRUCTION SECOND ENGINEERING BUREAU
72: Hui JIN, Xiaosheng LUO, Haiyu LI, Liangjin WEI, Xiaoya JIANG
33: CN 31: 202221042437.8 32: 2022-04-29

54: A DISTANCE MEASURING DEVICE AND A CALIPER

00: -

The embodiment of the present invention discloses a distance measuring device and a caliper, and relates to the technical field of measuring appliances, the distance measuring device comprises a housing, scales and a plurality of measuring devices, and each of the plurality of measuring devices comprises a stopper and a fixing device; the scales are arranged on the housing; and the stopper is arranged on the housing through the fixing device, so that each measuring device can be detachably connected with the housing without influencing each other. The advantages of a traditional reference object are achieved, the measuring device structure capable of being flexibly adjusted is further achieved, and limitation caused by the fixed length of a ruler is avoided.

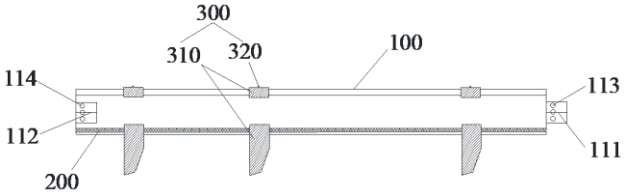

21: 2023/04262. 22: 2023/04/11. 43: 2023/05/08
51: A01B; A01G
71: Guangxi Academy of Agricultural Sciences
72: LI, Ming, HE, Shanshan, ZENG, Yuan, JING, Yan, TANG, Shiyun, ZHANG, Baoqing, LIANG, Chaoxu
33: CN 31: 2022111954997 32: 2022-09-28

54: POSITIONING RACK AND EARTHING METHOD FOR PREVENTING FIELD SUGARCANE FROM LODGING

00: -

The present invention discloses a positioning rack and an earthing method for pre-venting field sugarcane from lodging. The positioning rack of the present invention includes an earthing assembly and a support assembly, where the support assembly is disposed above the earthing assembly; the earthing assembly includes a bottom plate and several arc-shaped strips; an opening is formed in a middle portion of the bottom plate; corners of the opening in the bottom plate are arched; the several arc-shaped strips are divided into two groups; the two groups of arc-shaped strips are distributed symmetrically about the central axis of the bottom plate; upper ends of each group of arc-shaped strips are fixedly connected to a lower surface of the bottom plate; the arc-shaped strips are equidistantly distributed in an array; the support assembly includes a water outlet pipe, a telescopic pipe, a flexible pipe, a first spring, and an adjusting pipe; an adjusting assembly includes a first rotating base disposed at an upper end of the adjusting pipe, and a first rotating ball movably disposed in the first rotating base; and a clamping assembly includes a C-shaped block, second springs, and arc-shaped rings. The positioning rack and the earthing method for preventing field sugarcane from lodging according to the present invention have a good anti-lodging effect and a good earthing effect.

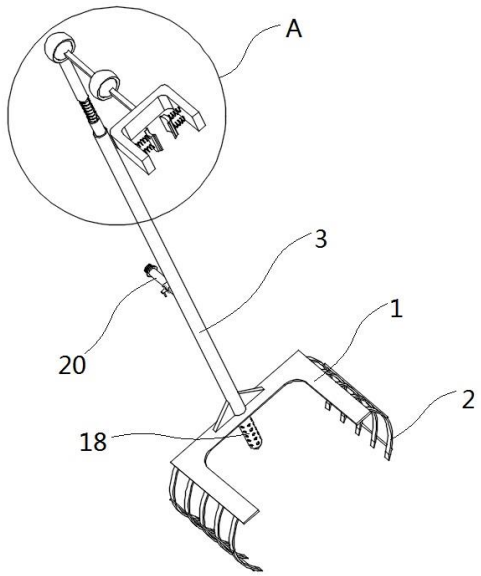

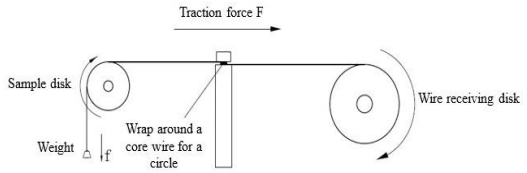

21: 2023/04296. 22: 2023/04/11. 43: 2023/04/26
51: B22F; B28D; C22C; D02G; D07B
71: XIAMEN HONGLU TUNGSTEN MOLYBDENUM INDUSTRY CO., LTD.
72: TANG, Minfeng, FANG, Yijin, LV, Sheng, GUO, Donghong, WU, Xianyue, PENG, Fusheng
33: CN 31: 202110077980.5 32: 2021-01-20
54: ALLOY WIRE ROD AND PREPARATION METHOD AND APPLICATION THEREOF
00: -
The present disclosure relates to the technical field of tungsten alloy materials, and in particular to an alloy wire rod and a preparation method and application thereof. The alloy wire rod is made of a tungsten alloy, and the tungsten alloy contains tungsten and an oxide of lanthanum. The alloy wire rod has a wire diameter of equal to or less than 100 µm; and the alloy wire rod has a tensile strength of greater than 3,800 MPa. The wire diameter of the alloy wire rod is equal to or less than 60 µm; the diameter of a push-pull core wire of the alloy wire rod is less than 350 µm; the elastic ultimate strength of the alloy wire rod is greater than 2,500 MPa; and the tensile strength of the alloy wire is greater than 4,200 MPa. In the present disclosure, the alloy wire rod having ultra-high strength and good toughness is obtained by doping an oxide of lanthanum.

HYPOTHECATIONS

No records available

JUDGMENTS

No records available

OFFICE PRACTISE NOTICES

No records available

3. DESIGNS

DESIGNS

APPLICATIONS FOR REGISTRATION OF DESIGNS IN TERMS OF ACT No. 195 OF 1993

The particulars appear in the following sequence: Copies of the application and representations cannot be supplied until application is registered and advertised. In all correspondence reference should be made to the number of the application. Application number, full name of applicant, class, articles to which design is to be applied and priority date (if any)

. - APPLIED ON 2023/04/24 -

A2023/00507 - Bayerische Motoren Werke Aktiengesellschaft Class 12. MOTOR VEHICLES

. - APPLIED ON 2023/04/25 -

A2023/00510 - INSTANT BRANDS HOLDINGS INC. Class 7. AIR FRYER DRAWER

A2023/00509 - INSTANT BRANDS HOLDINGS INC. Class 7. AIR FRYER

A2023/00512 - YETI Coolers, LLC Class 09. BOTTLE

A2023/00508 - INSTANT BRANDS HOLDINGS INC. Class 7. COOKING APPLIANCE

A2023/00513 - YETI Coolers, LLC Class 09. BOTTLE

A2023/00511 - INSTANT BRANDS HOLDINGS INC. Class 7. AIR FRYER

. - APPLIED ON 2023/04/26 -

A2023/00517 - ROLEX SA Class 10. WATCH CASE

A2023/00515 - SNYMAN, Mornay Class 07. COOKING APPLIANCES INCORPORATING PIZZA OVENS

A2023/00514 - SNYMAN, Mornay Class 07. SELF-FEEDING STOVES

A2023/00516 - SNYMAN, Mornay Class 07. COOKING APPLIANCES INCORPORATING ROTISSERIES

. - APPLIED ON 2023/04/28 -

A2023/00528 - Leer Group Class 12. VEHICLE ACCESSORIES

A2023/00522 - Leer Group Class 12. VEHICLE ACCESSORIES

A2023/00523 - Leer Group Class 12. VEHICLE ACCESSORIES

A2023/00520 - FLENDER GMBH Class 15. GEAR BOX CASING

A2023/00524 - Leer Group Class 12. VEHICLE ACCESSORIES

A2023/00519 - FLENDER GMBH Class 15. GEAR BOX CASING

A2023/00527 - Leer Group Class 12. VEHICLE ACCESSORIES

A2023/00521 - Leer Group Class 12. VEHICLE ACCESSORIES

A2023/00525 - Leer Group Class 12. VEHICLE ACCESSORIES

A2023/00526 - Leer Group Class 12. VEHICLE ACCESSORIES

A2023/00518 - GUANGZHOU OCUSUN OPHTHALMIC BIOTECHNOLOGY CO., LTD., OCUSUN OPHTHALMIC PHARMACEUTICAL (GUANGZHOU) CO., LTD. Class 9. EYEDROP BOTTLE

A2023/00529 - FLENDER GMBH Class 15. GEAR BOX CASING

. - APPLIED ON 2023/05/02 -

A2023/00530 - WeCo (Guangdong) Energy Storage Technology Co., Ltd. Class 32. DISPLAY SCREEN OR PORTION THEREOF WITH AN ANIMATED GRAPHICAL USER INTERFACE

. - APPLIED ON 2023/05/03 -

A2023/00532 - othusitse Class 32. LIONS SOVEREIGN AUTHORITY

F2023/00533 - Polytech Inc Class 6. BED BASE

A2023/00531 - GU, Angelique Class 13. BATTERY HOUSINGS

. - APPLIED ON 2023/05/04 -

F2023/00540 - Philippus Lodewickus Celliers Class 30. EZ BALLS

. - APPLIED ON 2023/05/05 -

A2023/00547 - Turlen Holding SA Class 10. WATCHES

A2023/00546 - VIDEOJET TECHNOLOGIES INC. Class 18. CARTRIDGE FOR A PRINTER

A2023/00545 - VIDEOJET TECHNOLOGIES INC. Class 18. CARTRIDGE FOR A PRINTER

A2023/00544 - VIDEOJET TECHNOLOGIES INC. Class 18. CARTRIDGE FOR A PRINTER

A2023/00541 - BIOCORP PRODUCTION S.A., à Conseil d'Administration Class 24. ADD-ON FOR INJECTOR PEN

F2023/00542 - BIOCORP PRODUCTION S.A., à Conseil d'Administration Class 24. ADD-ON FOR INJECTOR PEN

A2023/00543 - VIDEOJET TECHNOLOGIES INC. Class 18. CARTRIDGE FOR A PRINTER

. - APPLIED ON 2023/05/08 -

A2023/00548 - WILLIAMS, Darielle Dimone Class 21. AERIAL ACROBATIC APPARATUS

F2023/00549 - Timrite (Pty) Ltd Class 25. BACKFILL BAG

F2023/00550 - Timrite (Pty) Ltd Class 25. BACKFILL BAG

. - APPLIED ON 2023/05/09 -

F2023/00551 - BAARD, Charl Class 2. APRONS

. - APPLIED ON 2023/05/10 -

F2023/00559 - NIENHUIS, Jan, Balster Class 13. BRACKET (3) FOR MOUNTING SOLAR PANELS

F2023/00560 - NIENHUIS, Jan, Balster Class 13. BRACKET (2) FOR MOUNTING SOLAR PANEL RAILS ON TILED ROOF

A2023/00561 - Philips Domestic Appliances Holding B.V. Class 07. COFFEE MACHINE

F2023/00555 - NIENHUIS, Jan, Balster Class 13. ADJUSTABLE CLAMP FOR MOUNTING SOLAR PANELS

F2023/00557 - NIENHUIS, Jan, Balster Class 13. RAIL FOR MOUNTING SOLAR PANELS ON SLOTTED BRACKET

F2023/00552 - CENTRAL DISTRIBUTION NETWORK (PTY) LTD. Class 7. BREWING DEVICE

A2023/00553 - SCOTT, Alta, Elizabeth Class 9. A LID FOR A CONTAINER

F2023/00556 - NIENHUIS, Jan, Balster Class 13. BRACKET FOR T-SLOT RAIL FOR MOUNTING SOLAR PANEL RAILS ON ROOF

F2023/00554 - SCOTT, Alta, Elizabeth Class 9. A LID FOR A CONTAINER

F2023/00558 - NIENHUIS, Jan, Balster Class 13. SIDE T-SLOT RAIL FOR MOUNTING SOLAR PANELS ON SLOTTED BRACKET

. - APPLIED ON 2023/05/11 -

F2023/00568 - COMEC INDUSTRIES (PTY) LTD Class 23. VALVE CLOSURE MEMBER

A2023/00562 - BEW Wellness Proprietary Limited Class 09. PACKAGING

F2023/00566 - COMEC INDUSTRIES (PTY) LTD Class 23. NON-RETURN VALVE

A2023/00565 - BEW Wellness Proprietary Limited Class 09. PACKAGING

A2023/00563 - BEW Wellness Proprietary Limited Class 09. PACKAGING

A2023/00567 - COMEC INDUSTRIES (PTY) LTD Class 23. NON-RETURN VALVE

A2023/00564 - BEW Wellness Proprietary Limited Class 09. PACKAGING

. - APPLIED ON 2023/05/12 -

A2023/00569 - VAN ZYL STAALWERKE (PTY) LIMITED Class 15. HEAVY-DUTY DISH FOR A TILLAGE IMPLEMENT

A2023/00571 - MICRO CURRENT TECHNOLOGY, INC. Class 24. MICRO-CURRENT DELIVERY DEVICE

A2023/00572 - lufuno Jane Doyoyo Class 32. JESUSSWAG

F2023/00570 - VAN ZYL STAALWERKE (PTY) LIMITED Class 15. HEAVY-DUTY DISH FOR A TILLAGE IMPLEMENT

. - APPLIED ON 2023/05/15 -

A2023/00573 - VIRIDI E-MOBILITY TECHNOLOGY (NINGBO) CO., LTD., ZHEJIANG GEELY HOLDING GROUP CO., LTD., ZHEJIANG ZEEKR INTELLIGENT TECHNOLOGY CO., LTD. Class 13. POWER SUPPLY UNIT

F2023/00578 - Polyoak Packaging (Pty) Ltd Class 09. CONTAINER

F2023/00576 - Polyoak Packaging (Pty) Ltd Class 09. CONTAINER

A2023/00575 - Polyoak Packaging (Pty) Ltd Class 09. CONTAINER

A2023/00577 - Polyoak Packaging (Pty) Ltd Class 09. CONTAINER

F2023/00574 - Phallox (Pty) Ltd Class 24. MULTI-SIZE PENILE EXTENDER DEVICE

. - APPLIED ON 2023/05/16 -

A2023/00582 - Pakavi Pty Ltd, Tamer Celebioglu, ilhan Can Class 09. BONIQ

A2023/00579 - Quite Exclusive Mining Class 15. MACHINE

A2023/00581 - Jun Liu Class 13. POWER SUPPLY UNIT

A2023/00580 - Jun Liu Class 13. POWER SUPPLY UNIT

. - APPLIED ON 2023/05/17 -

A2023/00584 - PHILIP MORRIS PRODUCTS S.A. Class 27. ELECTRONIC CIGARETTE CONSUMABLE

A2023/00592 - REGENERON PHARMACEUTICALS, INC. Class 24. DOSE DELIVERY DEVICE

A2023/00591 - REGENERON PHARMACEUTICALS, INC. Class 24. PART OF A DOSE DELIVERY DEVICE

A2023/00589 - REGENERON PHARMACEUTICALS, INC. Class 24. PART OF A DOSE DELIVERY DEVICE

A2023/00586 - REGENERON PHARMACEUTICALS, INC. Class 24. DOSE DELIVERY DEVICE

A2023/00583 - PHILIP MORRIS PRODUCTS S.A. Class 27. ELECTRONIC CIGARETTE

A2023/00587 - REGENERON PHARMACEUTICALS, INC. Class 24. DOSE DELIVERY DEVICE

A2023/00594 - STASHER, INC. Class 7. CONTAINER

A2023/00588 - REGENERON PHARMACEUTICALS, INC. Class 24. PART OF A DOSE DELIVERY DEVICE

A2023/00590 - REGENERON PHARMACEUTICALS, INC. Class 24. PART OF A DOSE DELIVERY DEVICE

A2023/00593 - REGENERON PHARMACEUTICALS, INC. Class 24. DOSE DELIVERY DEVICE

A2023/00595 - PHILIP MORRIS PRODUCTS S.A. Class 32. LOGO, ORNAMENTATION, GRAPHIC SYMBOL, GRAPHIC DESIGN OR SURFACE PATTERN, FOR EXAMPLE FOR PACKAGING, IN PARTICULAR FOR PACKAGING FOR TOBACCO RELATED PRODUCTS, SUCH AS TOBACCO HEATING CONSUMABLES

A2023/00585 - PHILIP MORRIS PRODUCTS S.A. Class 27. ELECTRONIC CIGARETTE CONSUMABLE

. - APPLIED ON 2023/05/18 -

A2023/00597 - FERRARI S.P.A. Class 21. TOY CAR

A2023/00596 - FERRARI S.P.A. Class 12. CAR

A2023/00598 - Société des Produits Nestlé S.A. Class 7. COFFEE MACHINES

. - APPLIED ON 2023/05/19 -

F2023/00599 - Innovative Mining Products (Pty) Ltd Class 08. RESIN ANCHORED ROCK SUPPORT

. - APPLIED ON 2023/05/22 -

F2023/00607 - SIGNBOX (PTY) LTD Class 20. ALUMINIUM EXTRUSION FOR A LIGHTBOX (VOGUE 80)

F2023/00605 - SIGNBOX (PTY) LTD Class 20. ALUMINIUM EXTRUSION FOR A LIGHTBOX (TWIN 150)

F2023/00604 - SIGNBOX (PTY) LTD Class 20. ALUMINIUM EXTRUSION FOR A LIGHTBOX (TWIN 110)

F2023/00601 - THOMAS JOHN ROBINSON Class 15. INTERCHANGEABLE DISPERSER RING

F2023/00603 - SIGNBOX (PTY) LTD Class 20. ALUMINIUM EXTRUSION FOR A LIGHTBOX (CLASSIC)

F2023/00606 - SIGNBOX (PTY) LTD Class 20. ALUMINIUM EXTRUSION FOR A LIGHTBOX (VOGUE 65)

A2023/00600 - ISLE OF HARRIS DISTILLERS LIMITED Class 9. BOTTLE

F2023/00602 - R.J. Goldspink Pty Limited Class 25. SUPPORT PROPS

F2023/00608 - SIGNBOX (PTY) LTD Class 20. ALUMINIUM EXTRUSION FOR A LIGHTBOX (VOGUE 120)

F2023/00609 - THOMAS JOHN ROBINSON Class 15. INTERCHANGEABLE DISPERSER RING CONNECTOR

. - APPLIED ON 2023/05/23 -

F2023/00610 - VAN DEN BERG, HENDRIK GERHARDUS Class 12. CANOPY FOR A VEHICLE

A2023/00611 - Castrol Limited Class 9. CONTAINERS

. - APPLIED ON 2023/05/24 -

A2023/00613 - Novo Nordisk A/S Class 28. TABLETS

A2023/00612 - Novo Nordisk A/S Class 28. TABLETS

A2023/00615 - Novo Nordisk A/S Class 28. TABLETS

A2023/00616 - Novo Nordisk A/S Class 28. TABLETS

A2023/00614 - Novo Nordisk A/S Class 28. TABLETS

A2023/00617 - Noko Thabang Phala Class 32. M8

. - APPLIED ON 2023/05/25 -

F2023/00618 - Bongisisa Mbili Class 04. DRIP FREE TOILET BRUSH

. - APPLIED ON 2023/05/26 -

A2023/00620 - Hayleys Clothing Investments (Pty) Ltd Class 02. JEANS

A2023/00625 - UNILEVER GLOBAL IP LIMITED Class 9. SPRAY BOTTLE

A2023/00626 - SCHRÉDER S.A. Class 26. LUMINAIRE HOUSING

A2023/00622 - SMEG S.p.A. Class 7. COFFEE MACHINES

A2023/00621 - SMEG S.p.A. Class 7. COFFEE MACHINES

F2023/00623 - ROCBOLT TECHNOLOGIES (PTY) LTD. Class 8. BARRELS FOR WALL ANCHORS

A2023/00619 - Hayleys Clothing Investments (Pty) Ltd Class 02. JEANS

A2023/00624 - UNILEVER GLOBAL IP LIMITED Class 9. SPRAY BOTTLE

CHANGE OF NAME IN TERMS OF REGULATION 24

No records available

APPLICATION FOR THE RESTORATION OF A LAPSED DESIGN UNDER SECTION 23 OF THE ACT

Notice is hereby given that: **EUROPEAN REFRESHMENTS of Southgate, Dublin Road, DROGHEDA A92 YK7W, LOUTH, IRELAND** has made application for the restoration of the design registered to the said: **EUROPEAN REFRESHMENTS** for the Design: **BOTTLES** application number: **A2018/00372** date: **09/03/2018** which become void on **12/09/2020** due to non-payment of the prescribed renewal fee.

Any person may give notice on Design Form No 11 of opposition to restoration of the design within two months of the advertisement hereof.

Registrar of Designs

APPLICATION TO CORRECT AND/OR AMEND DESIGNS APPLICATION OR REGISTRATION

No records available

NOTICE OF REGISTRATION OF DESIGNS

Notice of registration of the designs mentioned below has been issued by the Registrar of Designs in terms of the Designs Act, 1993 (Act No. 195 of 1993)

INSPECTION OF DESIGNS

A design application, may after a notice of registration has been published, be inspected during office hours at the Designs Office, Pretoria, at a charge of R3, 00

COPIES OF DOCUMENTS

The Designs Office, Private Bag X400, Pretoria, supplies photocopies of all design documents at R1, 00 per page. (Payment to be affected by revenue stamps only.)

The numerical references denote the following: **(21)** Number of application. **(22)** Date of lodgement. **(23)** release date (if applicable). **(DR)** Date of registration. **(52)** Class. **(24)** Type of design. **(71)** Name(s) of applicant(s). **(33)** Country. **(31)** Number and. **(32)** Date of convention application. **(54)** Articles to which design is to be applied. **(57)** Brief statement of features.

N.B.: Date of registration (DR) is either Date of lodgement (22) or Date of convention of application (32) whichever is the earlier.

Registrar of Designs

21: A2020/00884 22: 2020-06-23 23: 2020-05-04
43: 2023-03-09
52: Class Class 23. 24: Part A
71: BONIFACE, DEAN JEFFREY
54: Wash Station
57: The design relates to a wash station. The features of the design are those of shape and/or configuration and/or pattern.

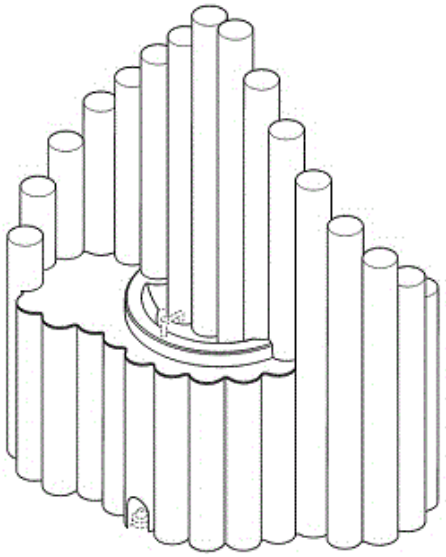

PERSPECTIVE VIEW

21: A2020/01160 22: 2020-08-27 23: 2020-05-04
43: 2023-03-09
52: Class Class 7. 24: Part A
71: DART INDUSTRIES INC.
33: US 31: 29/728,349 32: 2020-03-18
54: Pitcher Cap and Pitcher
57: The design relates to a pitcher cap and pitcher. The features of the design are those of shape and/or configuration and/or pattern and/or ornamentation.

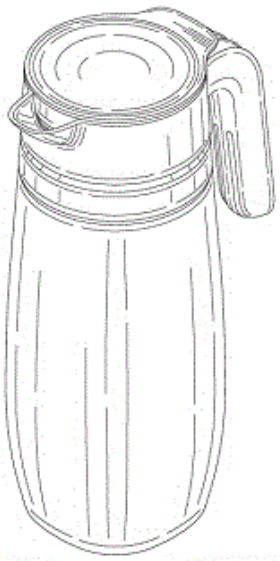

TOP, FRONT AND RIGHT SIDE PERSPECTIVE VIEW

21: A2020/01291 22: 2020-09-25 23: 2020-05-04
43: 2023-03-09
52: Class Class 14. 24: Part A
71: VYAIRE MEDICAL, INC.
33: US 31: 29/729,194 32: 2020-03-24
54: Computing Device with Graphical User Interface
57: The design relates to a computing device with graphical user interface. The features of the design are those of shape and/or configuration and/or ornamentation.

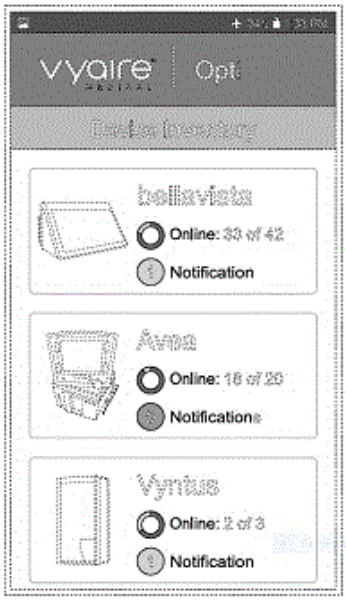

PLAN VIEW OF FIRST EMBODIMENT

21: A2020/01460 22: 2020-11-11 23: 2020-05-04
43: 2022-12-08
52: Class 31 24: Part A
71: Damian Farry
54: FOOD DEHYDRATORS
57: The design relates to a food dehydrator. The features of the design are those of pattern, shape, configuration and/or ornamentation.

FIGURE 1

21: A2020/01467 22: 2020-11-11 23: 2020-05-04
43: 2022-12-08
52: Class 07 24: Part A
71: Damian Farry
54: FOOD DEHYDRATORS
57: The design relates to a food dehydrator. The features of the design are those of pattern, shape, configuration and/or ornamentation.

21: A2020/01481 22: 2020-11-18 23: 2020-05-04
43: 2023-03-09
52: Class Class 9. 24: Part A
71: UNILEVER GLOBAL IP LIMITED
33: EM 31: 007958459-0003 32: 2020-05-20
54: Container
57: The design relates to a container. The features of the design are those of shape and/or configuration.

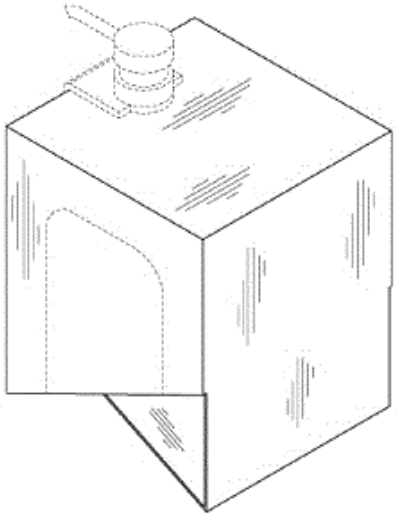

FRONT PERSPECTIVE VIEW

21: A2020/01506 22: 2020-11-23 23: 2020-05-04
43: 2023-03-09
52: Class Class 28. 24: Part A
71: HUA MEDICINE (SHANGHAI) LTD.
33: CN 31: 202030502105.3 32: 2020-08-28
54: Pharmaceutical Tablet
57: The design relates to a pharmaceutical tablet. The features of the design are those of shape and/or configuration and/or ornamentation.

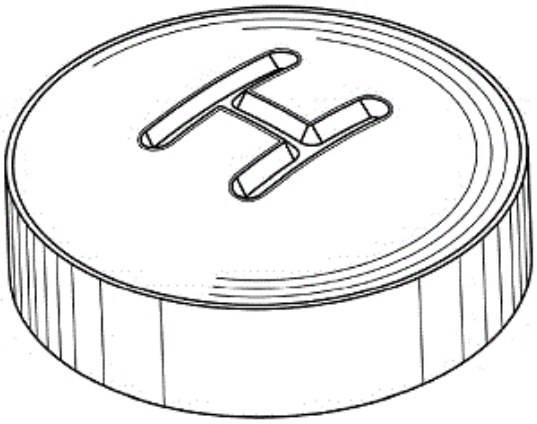

THIRD PERSPECTIVE VIEW

21: A2020/01621 22: 2020-12-15 23: 2020-05-04
43: 2023-03-23
52: Class Class 12. 24: Part A
71: RHINO RACK AUSTRALIA PTY LIMITED
33: AU 31: 202013332 32: 2020-06-16
54: Vehicle Roof Rack Mounting Adaptor
57: The design relates to a vehicle roof rack mounting adaptor. The features of the design are those of shape and/or configuration and/or pattern and/or ornamentation.

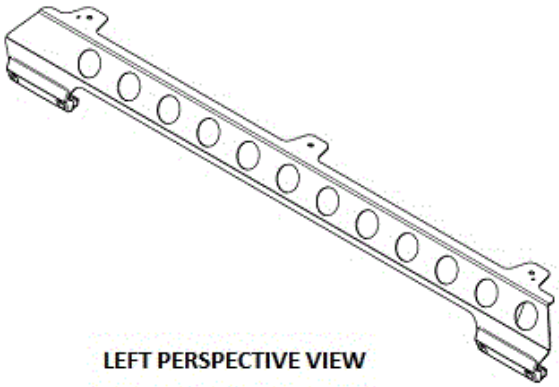

LEFT PERSPECTIVE VIEW

21: A2021/00034 22: 2021-01-21 23: 2020-05-04
43: 2023-03-09

52: Class Class 31. 24: Part A
71: CAPBRAN HOLDINGS, LLC
33: US 31: 29/743,932 32: 2020-07-24
54: Blender
57: The design relates to a blender. The features of the design are those of shape and/or configuration and/or ornamentation.

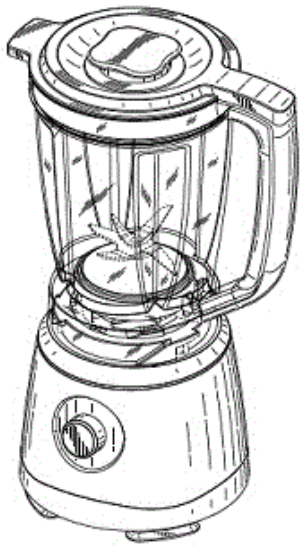

TOP FRONT PERSPECTIVE VIEW

21: A2021/00035 22: 2021-01-21 23: 2020-05-04
43: 2023-03-09
52: Class Class 31. 24: Part A
71: CAPBRAN HOLDINGS, LLC
33: US 31: 29/743,935 32: 2020-07-24
54: Juicer Container
57: The design relates to a juicer container. The features of the design are those of shape and/or configuration and/or ornamentation.

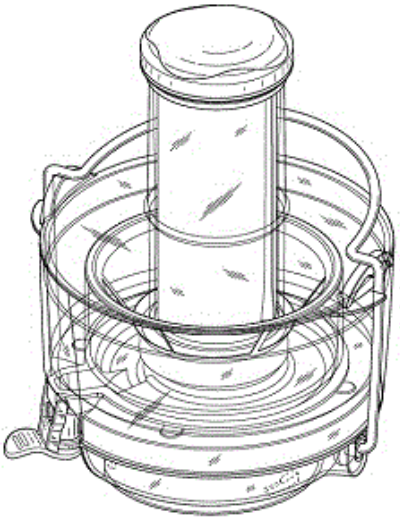

TOP FRONT PERSPECTIVE VIEW

21: A2021/00247 22: 2021-03-10 23: 2020-05-04
43: 2023-03-23
52: Class Class 3. 24: Part A
71: DECATHLON
33: EM 31: 008200299-0001 32: 2020-10-09
54: Hiking Bag
57: The design relates to a hiking bag. The features of the design are those of shape and/or configuration and/or pattern and/or ornamentation.

PERSPECTIVE VIEW

21: A2021/00939 22: 2021-08-06 23: 2020-05-04
43: 2023-03-23
52: Class Class 12. 24: Part A
71: FERRARI S.P.A.

33: IB 31: DM/213968 32: 2021-02-09
54: Car
57: The design relates to a car. The features of the design are those of shape and/or configuration and/or ornamentation.

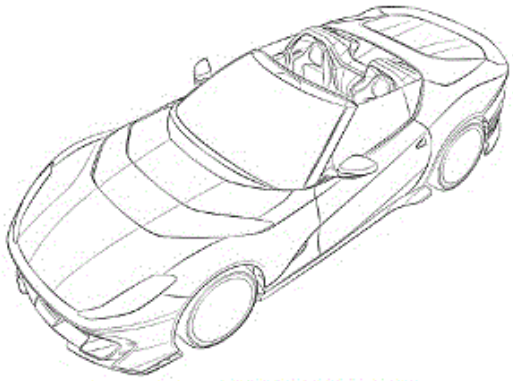

FRONT PERSPECTIVE VIEW

21: A2021/01191 22: 2021-09-30 23: 2020-05-04
43: 2023-03-23
52: Class Class 12. 24: Part A
71: MANITOU ITALIA S.R.L.
33: EM 31: 001482285-0005 32: 2021-04-02
54: Part of Lifting Vehicles
57: The design relates to a part of lifting vehicles. The features of the design are those of shape and/or configuration.

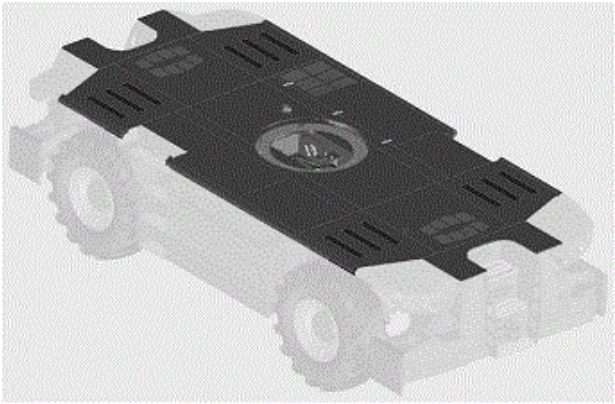

PERSPECTIVE VIEW IN USE

21: A2021/01335 22: 2021-10-27 23: 2020-05-04
43: 2022-05-11
52: Class 21 24: Part A
71: SATHASIVAN LOGANATHAN GOVENDER
54: BOARD GAME
57: The design relates to a Board Game. The features of the design are those of shape and/or pattern and/or ornamentation and/or configuration

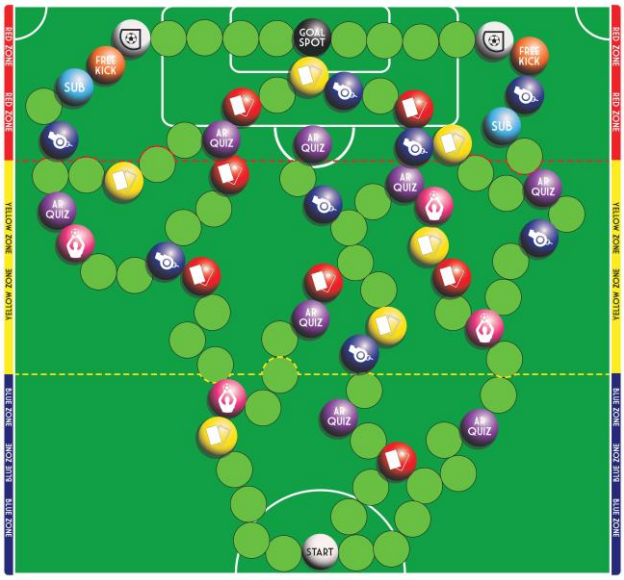

21: A2021/01350 22: 2021-10-29 23: 2020-05-04
43: 2023-03-20
52: Class 08 24: Part A
71: RA ASSET TRUST
54: CHAIN LINKS
57: The features of the design for which protection is claimed reside in the shape and/or configuration and/or pattern and/or ornamentation of a chain link substantially as illustrated in Figures 1 to 6 of the accompanying representations, irrespective of colour.

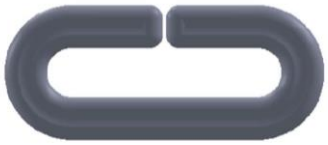

Figure 1
Side view of chain link

21: A2021/01352 22: 2021-10-29 23: 2020-05-04
43: 2023-03-20
52: Class 25 24: Part A
71: RA ASSET TRUST
54: BARRIER ARRANGEMENTS
57: The features of the design for which protection is claimed reside in the shape and/or configuration and/or pattern and/or ornamentation of a barrier arrangement substantially as illustrated in the accompanying representations.

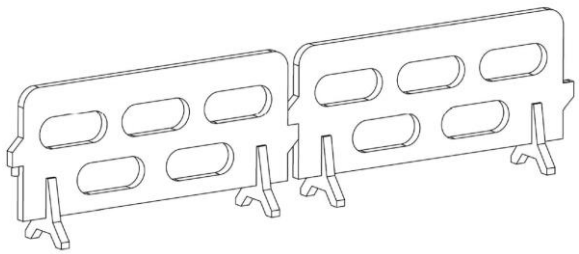

Figure 12
Perspective view of barrier arrangement

21: A2021/01354 22: 2021-10-29 23: 2020-05-04
43: 2023-03-20
52: Class 25 24: Part A
71: RA ASSET TRUST
54: BARRIERS
57: The features of the design for which protection is claimed reside in the shape and/or configuration and/or pattern and/or ornamentation of a barrier substantially as illustrated in the accompanying representations.

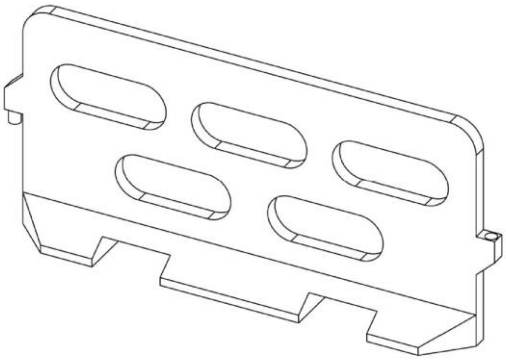

Figure 1
Perspective view of barrier

21: A2022/00148 22: 2022-02-11 23: 2020-05-04
43: 2021-08-12
52: Class 21 24: Part A
71: Dr. Ing. h.c. F. Porsche Aktiengesellschaft
33: EM(DE) 31: 008649867-0001 32: 2021-08-12
54: AUTOMOBILES
57: The design is for a car in the form of a two-door coupé. It has a pair of side intake radiator grilles straddling a lower central portion of a front bumper. The car has a clamshell-shaped bonnet on which stands in relief a pair of elongate side portions separated by an elongate central portion. Each side portion extends forwardly into a rectangular shaped intake grille at a front of the car. A pair of protruding circular-oval-shaped headlights are located on either side of the bonnet. The car has a dome-shaped roof and a downwardly, rearwardly inclined rear windscreen extends between the roof and trunk. An elongate, horizontally extending spoiler protrudes outwardly from an upper periphery of the trunk and an elongate light strip is below the spoiler. The car also has a generally elongate rear bumper with curved contours with real wheel arches having a wider footprint than a midsection of the car.

Figure 1
Three-dimensional view

21: A2022/00149 22: 2022-02-11 23: 2020-05-04
43: 2021-08-12
52: Class 21 24: Part A
71: Dr. Ing. h.c. F. Porsche Aktiengesellschaft
33: EM(DE) 31: 008649867-0002 32: 2021-08-12
54: AUTOMOBILES
57: The design is for a car in the form of a two-door coupé. It has a pair of side intake radiator grilles straddling a lower central portion of a front bumper. The car has a clamshell-shaped bonnet on which stands in relief a pair of elongate side portions separated by an elongate central portion. Each side portion extends forwardly into a rectangular shaped intake grille at a front of the car. A pair of protruding circular-oval-shaped headlights are located on either side of the bonnet. The car has a dome-shaped roof and a downwardly, rearwardly inclined rear windscreen extends between the roof and trunk. An elongate, horizontally extending spoiler protrudes outwardly from an upper periphery of the trunk and an elongate light strip is below the spoiler. The car also has a generally elongate rear bumper with curved contours with real wheel arches having a wider footprint than a midsection of the car.

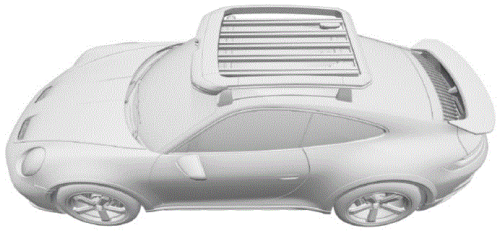

Figure 1

Three-dimensional view

21: A2022/00189 22: 2022-02-24 23: 2020-05-04
43: 2023-03-09
52: Class Class 12. 24: Part A
71: WHEEL PROS, LLC
33: US 31: 29/814,010 32: 2021-11-02
54: Wheel
57: The design relates to a wheel. The features of the design are those of shape and/or configuration and/or pattern and/or ornamentation.

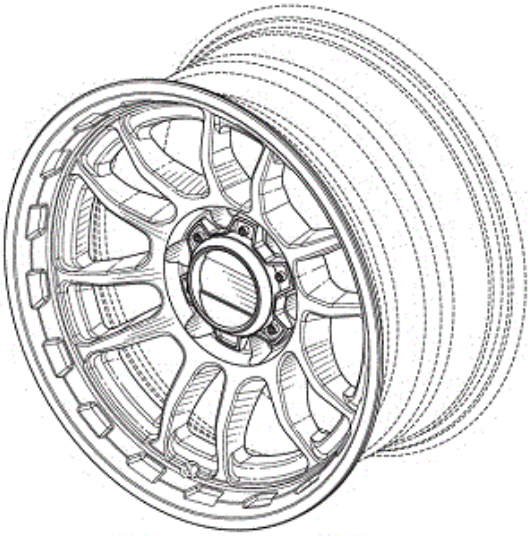

PERSPECTIVE VIEW

21: A2022/00198 22: 2022-02-25 23: 2020-05-04
43: 2021-08-26
52: Class 28 24: Part A
71: Koninklijke Philips N.V.
33: EM(NL) 31: 008663124-0004 32: 2021-08-26
54: SHAVERS
57: The design is for a shaver that has an elongate body which is generally oval in transverse cross-section and comprises first and second end portions and a central portion between the end portions, the central portion and end portions being separated by peripheral recesses which extend around the body and one of which recesses is generally U-shaped. One end of the body defined by the first end portion is inclined. A shaving head which includes a blade arrangement which is inclined relative to the body is connected to the other end of the body. A square-shaped button with rounded corners is provided at a front face of the central portion. The shaver includes a neck which is tilted forwardly relative to the rest of the body. A series of longitudinally spaced, partly circumferentially extending ribbings are provided on the rear side of the neck and central portion, and in the space defined by the U-shaped recess.

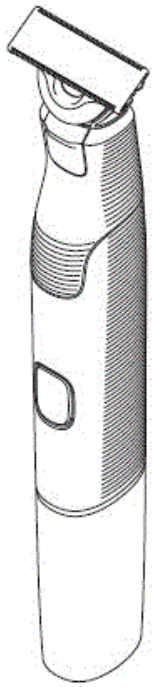

Figure 1

Three-dimensional view

21: A2022/00199 22: 2022-02-25 23: 2020-05-04
43: 2021-08-26
52: Class 28 24: Part A
71: Koninklijke Philips N.V.
33: EM(NL) 31: 008663124-0007 32: 2021-08-26
54: SHAVERS
57: The design is for a shaver, in particular a blade arrangement thereof. The blade arrangement includes a substantially triangular shaped support and a pair of opposite first and second generally bean-shaped support members located at a front and rear sides of the support. An elongate blade that is inclined relative to the triangular-shaped support is

supported between square shaped elements. Each of the square-shaped elements protrude from each of the ends of the first and second bean-shaped support members. A pair of triangular-shaped members are fitted at the rear of the blade between the square-shaped elements.

Figure 1

Three-dimensional view

21: A2022/00200 22: 2022-02-25 23: 2020-05-04
43: 2021-08-26
52: Class 28 24: Part A
71: Koninklijke Philips N.V.
33: EM(NL) 31: 008663124-0010 32: 2021-08-26
54: HANDLES FOR SHAVERS
57: The design is for a shaver that has an elongate body which is generally oval in transverse cross-section and comprises first and second end portions and a central portion between the end portions, the central portion and end portions being separated by peripheral recesses which extend around the body. One end of the body defined by the first end portion is inclined. A socket is defined at the other end of the body. A square shaped button with rounded corners is provided substantially at the center of a front face of the central portion. A front face of the second end portion is curved inwardly towards the end of the body to form a neck which is of reduced transverse cross-section and which is tilted forwardly relative to the rest of the body.

Figure 1

Three-dimensional view

21: A2022/00201 22: 2022-02-25 23: 2020-05-04
43: 2021-08-26
52: Class 28 24: Part A
71: Koninklijke Philips N.V.
33: EM(NL) 31: 008663124-0015 32: 2021-08-26
54: BLADES FOR SHAVERS
57: The design is for a blade for a shaver. The blade includes a pair of opposite first and second generally bean-shaped support members located at a front and rear of generally triangular shaped support of the blade.

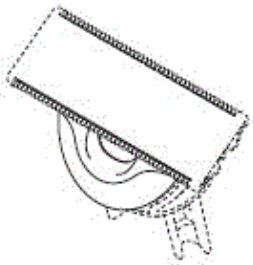

Figure 1

Three-dimensional view

21: A2022/00203 22: 2022-02-25 23: 2020-05-04
43: 2021-08-26
52: Class 28 24: Part A
71: Koninklijke Philips N.V.
33: EM(NL) 31: 008663124-0003 32: 2021-08-26
54: SHAVERS

57: The design is for a shaver that has an elongate body which is generally oval in transverse cross-section and comprises first and second end portions and a central portion between the end portions, the central portion and end portions being separated by peripheral recesses which extend around the body. One end of the body defined by the first end portion is inclined. A shaving head is connected to the other end of the body. A square shaped button with rounded corners is provided substantially at the center of a front face of the central portion. A front face of the second end portion is curved inwardly towards the end of the body to form a neck which is of reduced transverse cross-section and which is tilted forwardly relative to the rest of the body. The shaving head includes a blade arrangement which is inclined relative to the body.

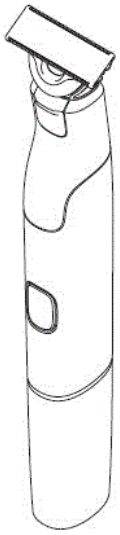

Figure 1

Three-dimensional view

21: A2022/00204 22: 2022-02-25 23: 2020-05-04
43: 2021-08-26
52: Class 28 24: Part A
71: Koninklijke Philips N.V.
33: EM(NL) 31: 008663124-0011 32: 2021-08-26
54: HANDLES FOR SHAVERS
57: The design is for a shaver that has an elongate body which is generally oval in transverse cross-section and comprises first and second end portions and a central portion between the end portions, the central portion and end portions being separated by peripheral recesses which extend around the body and one of which recesses is generally U-shaped. One end of the body defined by the first end portion is inclined. A socket is defined at the other end of the body. A square-shaped button with rounded corners is provided at a front face of the central portion. The shaver includes a neck which is tilted forwardly relative to the rest of the body. A series of longitudinally spaced, partly circumferentially extending ribbings are provided on the rear side of the neck and the central portion, and in the space defined by the U-shaped recess.

Figure 1

Three-dimensional view

21: A2022/00205 22: 2022-02-25 23: 2020-05-04
43: 2021-08-26
52: Class 28 24: Part A
71: Koninklijke Philips N.V.
33: EM(NL) 31: 008663124-0013 32: 2021-08-26
54: BLADES FOR SHAVERS
57: The design is for a blade for a shaver. The blade includes a substantially triangular-shaped support and a pair of opposite first and second generally bean-shaped support members located at a front and rear of the support. A pair of opposite elongate pillars extend from either side of the support. An elongate blade arrangement that is inclined relative to the support extends between square shaped elements each of which protruding from the ends of the first and second bean-shaped support members. A pair of substantially triangular-shaped members are fitted at the rear of the blade arrangement between the square-shaped elements.

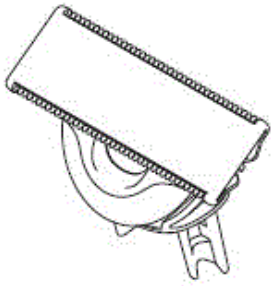

Figure 1

Three-dimensional view

21: A2022/00373 22: 2022-04-07 23: 2020-05-04
43: 2021-10-07
52: Class 22 24: Part A
71: Skell Inc.
33: US 31: 29/810,627 32: 2021-10-07
54: BUG KILLING PISTOLS
57: The design is for a bug killing pistol having a rearwardly inclined handle connected to a frame, extending to a barrel with a muzzle. A front of the handle defines gripping recesses. The frame includes a curved hammer, a rear sight, and an oval trigger guard within which a curved trigger is positioned. A curved crane is positioned at a bottom of the barrel. A top of the barrel includes a front sight.

Figure 1

Three-dimensional view

21: A2022/00383 22: 2022-04-08 23: 2020-05-04
43: 2023-03-23
52: Class 03 24: Part A
71: SCREEN GRAPHICS CC
54: PARASOL BANNER
57: The novelty in the design as applied to a collapsible banner for a parasol resides in the shape and/or configuration, and/or pattern and/or ornamentation of the banner substantially as shown in the accompanying drawings.

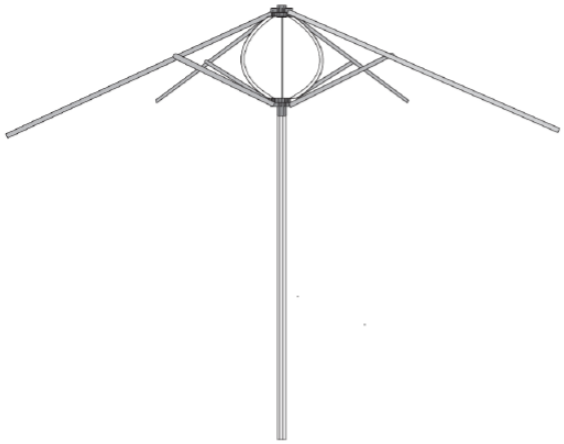

21: A2022/00530 22: 2022-05-16 23: 2020-05-04

43: 2021-11-19
52: Class 4 24: Part A
71: GlaxoSmithKline Consumer Healthcare (UK) IP Limited
33: EM(DE) 31: 008768873 32: 2021-11-19
54: TOOTHBRUSHES
57: The design is for a toothbrush. The toothbrush has an elongate handle with a constant cross-sectional profile, terminating in a rounded base. A neck extends angularly forwardly between the handle and a head of the toothbrush. A textured surface pattern comprising a series of longitudinally spaced, oblique ridges is provided at a front and rear of an upper part of the handle. The textured surface pattern completely covers the upper part of the rear, wraps around one side, and partially covers the upper part of the front, stopping short in a curved contour line. The head is continuous with the neck and defines an oval surface at its front for accommodating bristles.

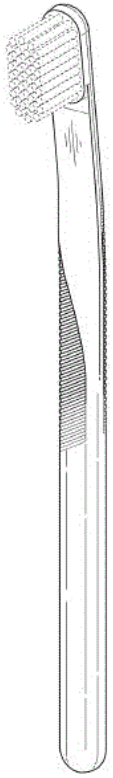

Figure 1

Three-dimensional view

21: A2022/00537 22: 2022-05-18 23: 2020-05-04
43: 1900-01-01
52: Class 12 24: Part A
71: MERCEDES-BENZ GROUP AG
33: DE 31: 402021204197.8 32: 2021-11-19
54: VEHICLE
57: The vehicle is shown in perspective front view showing the overall appearance thereof.

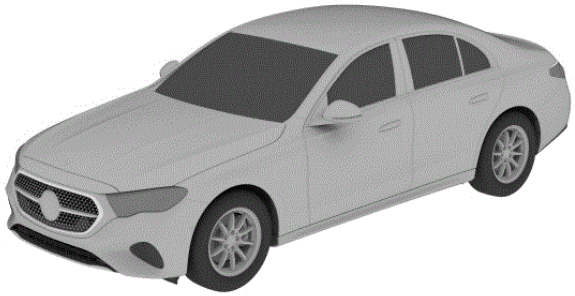

21: A2022/00538 22: 2022-05-18 23: 2020-05-04
43: 1900-01-01
52: Class 12 24: Part A
71: MERCEDES-BENZ GROUP AG
33: DE 31: 402021204197.8 32: 2021-11-19
54: VEHICLE
57: The vehicle is shown in perspective front view showing the overall appearance thereof.

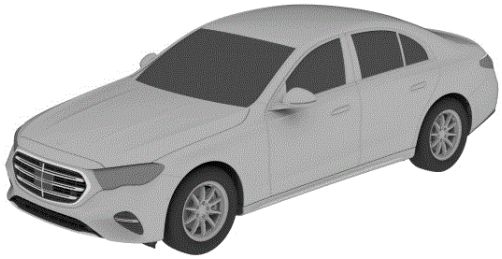

21: A2022/00558 22: 2022-05-23 23: 2020-05-04
43: 2021-11-24
52: Class 12 24: Part A
71: Bayerische Motoren Werke Aktiengesellschaft
33: DE 31: 402021101075.0 32: 2021-11-24
54: MOTOR VEHICLES
57: The design is for a motor vehicle in the form of a long wheelbase saloon, the vehicle comprising a body having a silhouette with an elongate bonnet and a blow-shaped flowing windscreen, roofline and rear window. A front defines a pair of prominent octagonal kidney grilles flanked at an upper portion by slim rearwardly extending headlights and parallelogram-shaped light clusters. The front further includes a pair of laterally disposed triangular openings. An elongate hexagonal opening is positioned below the kidney grilles. Side windows extend continuously from the windscreen past each rear door to end in a framed L-shaped kink. Large

round wheel arches are positioned over tyres with prominent circular central portions. Upper and lower swage lines extend along each side of the vehicle. The rear includes a pair of L-shaped rearwardly extending rearlights with tapered ends.

Figure 1

Three-dimensional view

21: A2022/00654 22: 2022-06-14 23: 2020-05-04
43: 2021-12-15
52: Class 14 24: Part A
71: Huawei Technologies Co., Ltd.
33: CN 31: 202130831173.9 32: 2021-12-15
54: MEMORY CARDS
57: A card, comprising ten contacts which are disposed on a surface of the card; wherein the card comprises four edges which comprises a first edge, a second edge, a third edge and a fourth edge; wherein there is a chamfer located between the first edge and the third edge; a distance between the first edge and the second edge is greater than a distance between the third edge and the fourth edge; five contacts of the ten contacts are distributed in a first row and are sequentially distributed along the first edge; and other five contacts of the ten contacts are distributed in a second row and are sequentially distributed along the second edge.

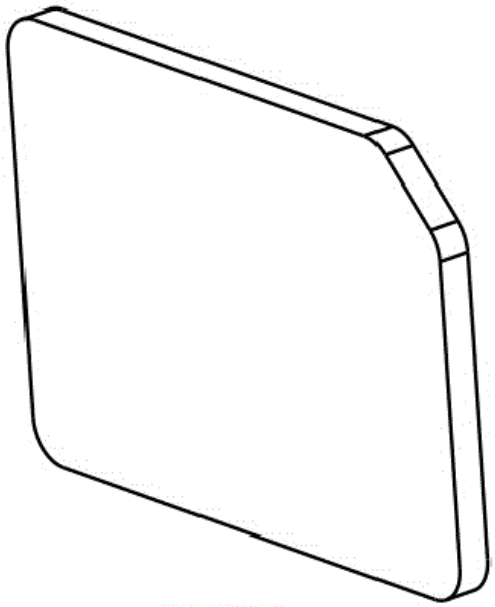

Figure 1

Three-dimensional view

21: A2022/00661 22: 2022-06-14 23: 2020-05-04
43: 2021-12-15
52: Class 14 24: Part A
71: Huawei Technologies Co., Ltd.
33: CN 31: 202130831173.9 32: 2021-12-15
54: MEMORY CARDS
57: A card, comprising ten contacts which are disposed on a surface of the card; wherein the card comprises four edges which comprises a first edge, a second edge, a third edge and a fourth edge; wherein there is a chamfer located between the first edge and the third edge; a distance between the first edge and the second edge is greater than a distance between the third edge and the fourth edge; five contacts of the ten contacts are distributed in a first row and are sequentially distributed along the first edge; and other five contacts of the ten contacts are distributed in a second row and are sequentially distributed along the second edge.

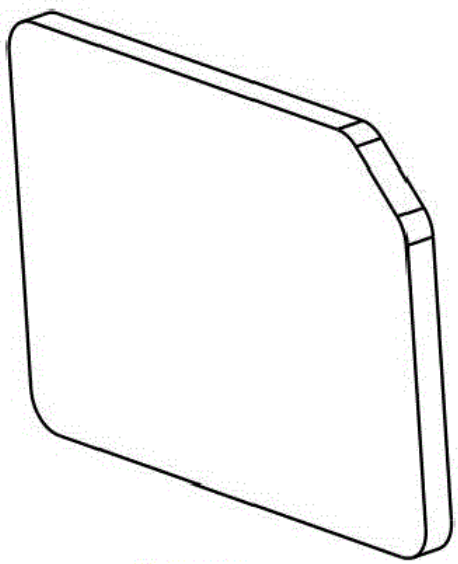

Figure 1

Three-dimensional view

21: A2022/00770 22: 2022-06-30 23: 2020-05-04
43: 2023-04-20
52: Class 28 24: Part A
71: Triple A Finance GmbH & Co. KG
33: WO 31: WIPO111814 32: 2021-12-30
54: ANTI-WRINKLE APPLIANCES
57: The features of the design for which protection is claimed include the shape and/or configuration and/or pattern of an article substantially as shown in the accompanying representation(s).

21: A2022/00782 22: 2022-06-30 23: 2020-05-04
43: 2023-05-03
52: Class 13 24: Part A
71: PIMMS GROUP (PTY0 LTD
54: CONNECT TERMINAL FACIA
57: The features of the design for which protection is claimed include the shape and/or configuration of the CONNECT TERMINAL FACIA substantially as illustrated in the accompanying representations.

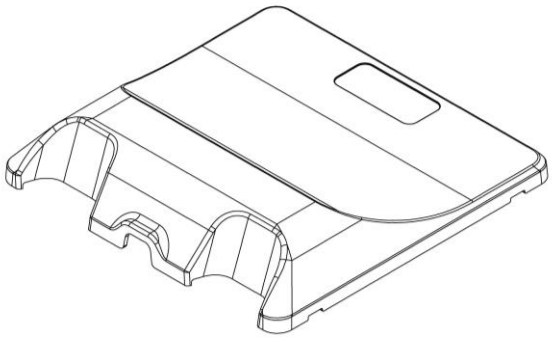

21: A2022/00801 22: 2022-07-11 23: 2020-05-04
43: 2022-07-11
52: Class 8 24: Part A
71: BUCK, Roger Duncan
54: DOOR STOP
57: The design is applied to a door stop. The features of the design for which protection is claimed include the shape and/or configuration of a door stop, substantially as illustrated in the accompanying representations.

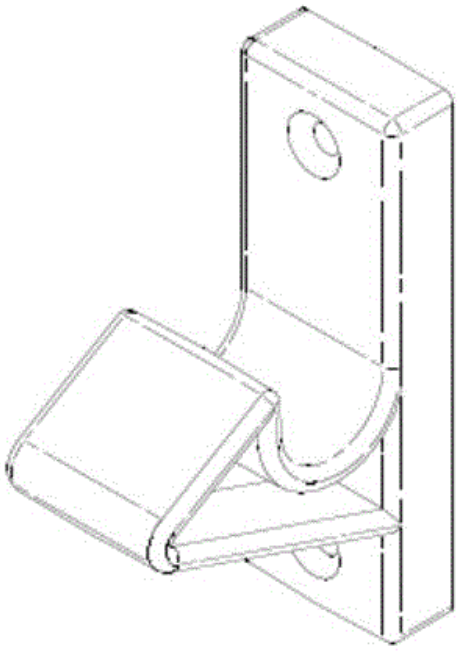

Three-dimensional view

21: A2022/00807 22: 2022-07-14 23: 2020-05-04
43: 2023-05-03
52: Class 05 24: Part A
71: Duvibuddy (PTY) LTD
54: SHEET FOR A BED
57: The features of the design for which novelty is claimed are the shape and / or configuration and / or pattern of a fitted sheet having at least one zip, wherein zips in position B, C and D are disclaimed.

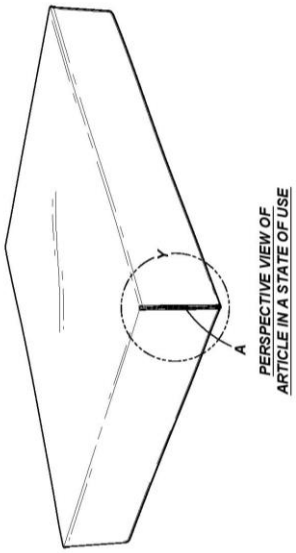

21: A2022/00829 22: 2022-07-26 23: 2020-05-04
43: 2022-01-27
52: Class 19 24: Part A
71: Cricut, Inc.
33: US 31: 29/824,915 32: 2022-01-27
54: CRAFTING APPARATUS
57: The article is used to perform work, such as cutting, on a workpiece. The article generally includes an angled working surface and associated workpiece management components to facilitate the act of conducting "work" upon a workpiece. The article relates to a crafting apparatus having a "door-less" configuration wherein a rail, along which a carriage moves, is generally exposed and/or visible to the user.

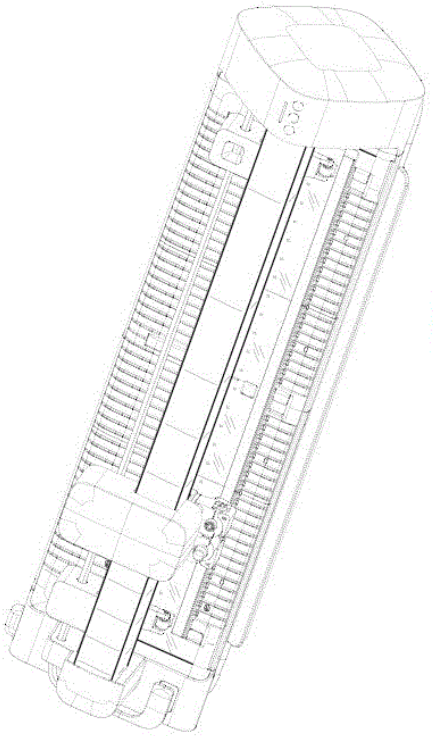

Figure 1
Three-dimensional view of the design in a first configuration

21: A2022/00830 22: 2022-07-26 23: 2020-05-04
43: 2022-01-27
52: Class 15 24: Part A
71: Cricut, Inc.
33: US 31: 29/824,903 32: 2022-01-27
54: PRESSES
57: This article is used to heat-transfer prescribed design to a prescribed base material, specifically, in a manner where the prescribed base material is arranged onto a lower platen of the article (via a pressing mat (not shown), as needed); a prescribed heat-transfer material, which comprises the prescribed design, is arranged onto an upper surface of the prescribed base material; and then an upper heat plate of the article is closed to heat-transfer the prescribed design to the prescribed base material.

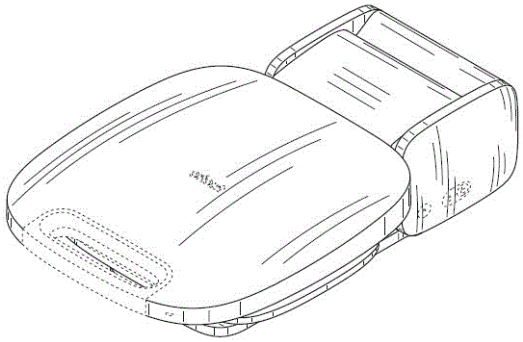

Figure 1
Three-dimensional view of the design
in a closed configuration

21: A2022/00846 22: 2022-07-28 23: 2020-05-04
43: 2023-03-15
52: Class Class 10. 24: Part A
71: OMEGA SA (OMEGA AG) (OMEGA LTD.)
33: IB 31: WIPO114880 32: 2022-03-21
54: Wristwatch
57: The design relates to a wristwatch. The features of the design are those of shape and/or configuration and/or pattern and/or ornamentation.

ENLARGED VIEW

21: A2022/00869 22: 2022-07-29 23: 2020-05-04
43: 2022-07-20
52: Class 28 24: Part A
71: Lashify, Inc.
33: US 31: 29/846,967 32: 2022-07-20
54: LASH EXTENSION SEPARATING APPARATUSES
57: The design relates to a lash extension separating apparatus for applying artificial eyelash

extensions and separating artificial hairs from artificial eyelash extensions. The apparatus resembles undulating tweezers and includes a pair of opposing arms that are joined at proximal ends thereof. Each arm includes a curved section at a distal end thereof. The curved section at the distal end of one arm includes longitudinally spaced apart slots and the curved section of the distal end of the opposite arm includes complementary spaced apart teeth elements facing the slots. Each arm includes an enlarged central curved section extending between the distal and proximal ends.

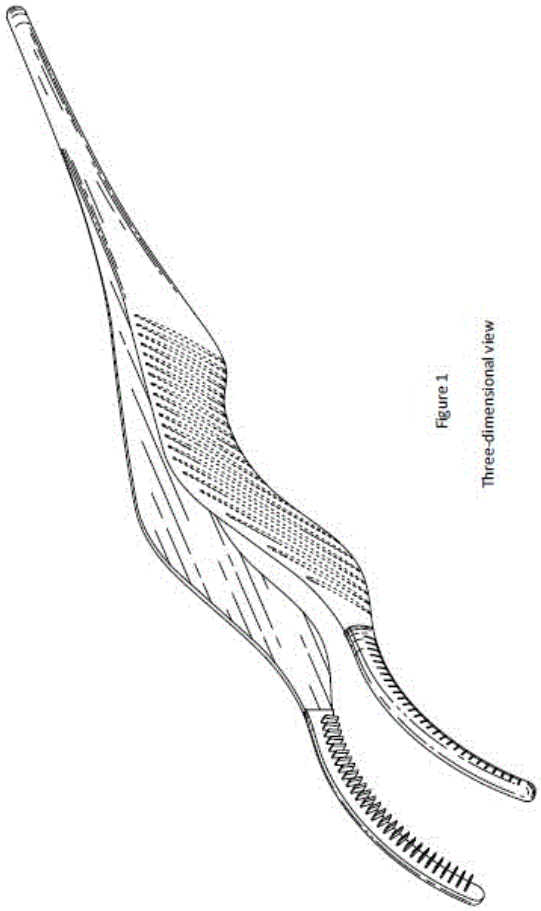

21: A2022/00870 22: 2022-07-29 23: 2020-05-04
43: 2022-07-20
52: Class 28 24: Part A
71: Lashify, Inc.
33: US 31: 29/846,967 32: 2022-07-20
54: LASH EXTENSION SEPARATING APPARATUSES
57: The design relates to a lash extension separating apparatus for applying artificial eyelash extensions and separating artificial hairs from artificial eyelash extensions. The apparatus includes a pair of opposing curved arm sections. One of the curved arm sections includes longitudinally spaced apart slots and the other curved arm section includes complementary spaced apart teeth elements facing the slots.

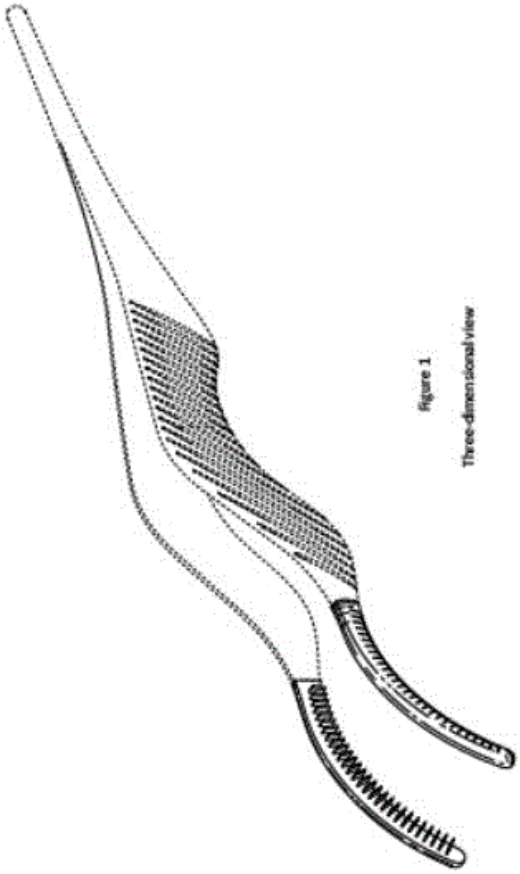

21: A2022/00871 22: 2022-07-29 23: 2020-05-04
43: 2022-07-20
52: Class 28 24: Part A
71: Lashify, Inc.
33: US 31: 29/846,967 32: 2022-07-20
54: LASH EXTENSION SEPARATING APPARATUSES
57: The design relates to a lash extension separating apparatus for applying artificial eyelash extensions and separating artificial hairs from artificial eyelash extensions. The apparatus includes a pair of opposing curved arm sections. One of the curved arm sections includes longitudinally spaced apart slots at a central portion thereof, and the other curved arm section includes complementary spaced apart teeth elements facing and arranged in register with the slots.

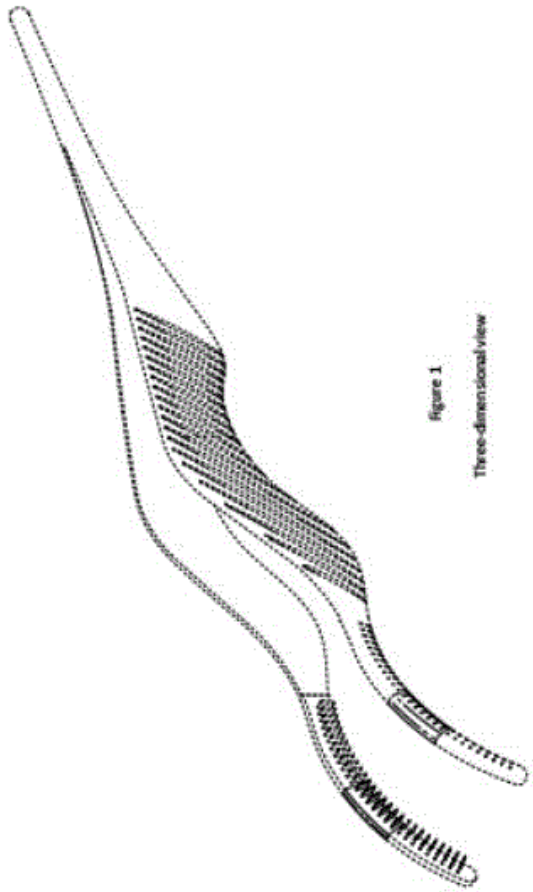

21: A2022/00872 22: 2022-07-29 23: 2020-05-04
43: 2022-07-20
52: Class 28 24: Part A
71: Lashify, Inc.
33: US 31: 29/846,967 32: 2022-07-20
54: LASH EXTENSION SEPARATING APPARATUSES
57: The design relates to a lash extension separating apparatus for applying artificial eyelash extensions and separating artificial hairs from artificial eyelash extensions. The apparatus resembles undulating tweezers and includes a pair of opposing arms that are joined at proximal ends thereof. Each arm includes a curved section at a distal end thereof. The curved section at the distal end of one arm includes longitudinally spaced apart slots and the curved section of the distal end of the opposite arm includes complementary spaced apart teeth elements facing and in register with the slots. Each arm includes an enlarged central curved section extending between the distal and proximal ends.

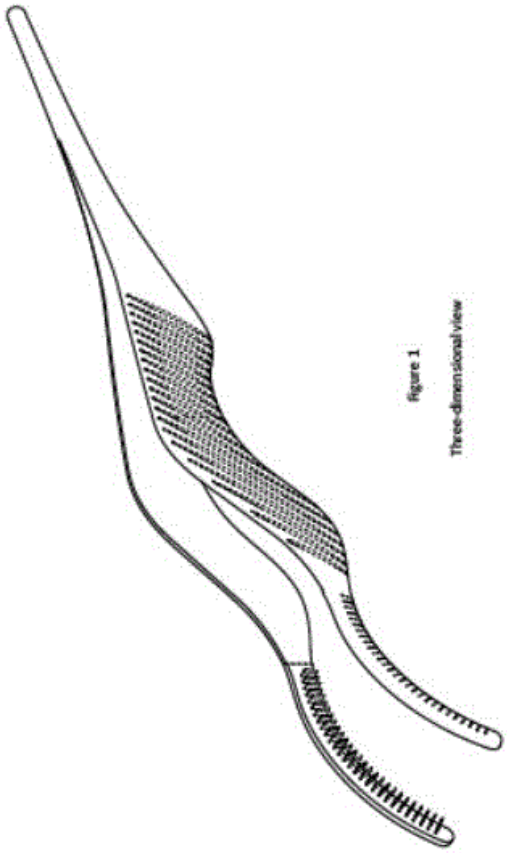

21: A2022/00877 22: 2022-07-29 23: 2020-05-04
43: 2022-01-31
52: Class 2 24: Part A
71: Crocs, Inc.
33: US 31: 29/825,378 32: 2022-01-31
54: FOOTWEAR
57: The design is for a footwear in the form of a slip on shoe. The footwear has a vamp defining an opening at a rear end thereof. The vamp has contoured lines and includes inwardly curved depressions. A series of spaced circular openings are provided in each depression. The footwear has a sole that is connected to the vamp.

Figure 1

Three-dimensional view

21: A2022/00878 22: 2022-07-29 23: 2020-05-04
43: 2022-01-31
52: Class 31 24: Part A
71: SMEG S.p.A.
33: HSIRID(IT) 31: DM/219026 32: 2022-01-31
54: BLENDERS
57: The design is for a blender having a circular base, a dome shaped central portion, an upper container portion and a circular stepped shoulder extending between the dome shaped and container portions. Four generally trapezium shaped feet, which are contiguous with the base, project downwardly from the circular base at circumferentially spaced apart positions. A circular knob having a recessed front face protrudes from the front of the dome-shaped portion. The knob is disposed proximate to the base and is partly surrounded by a raised circular ring. The upper container portion is shaped substantially as a cylindrical dome.

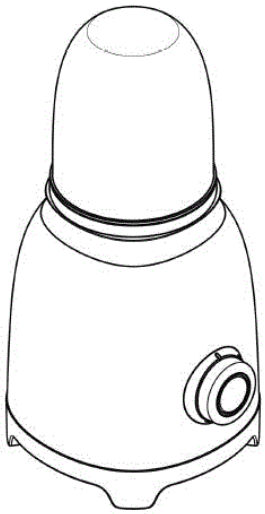

Figure 1

Three-dimensional view

21: A2022/00884 22: 2022-08-01 23: 2020-05-04
43: 2022-02-02
52: Class 10 24: Part A
71: Turlen Holding SA
33: HSIRID(CH) 31: DM/218894 32: 2022-02-02
54: WATCHES
57: The design is for a watch comprising a tonneau shaped body which includes a bezel, a middle case portion and a transparent case back. When seen in side view the body is arcuately curved. Twelve screws or studs are located in the bezel. A samurai warrior figure with crossed samurai swords makes up a watch face and is visible from front and rear faces of the watch. The front face includes a braided U-shaped element extending above the samurai at a twelve o' clock position. A fluted crown with a heptagram star protrudes from the middle case portion at a three o' clock position.

Figure 1

Three-dimensional view

21: A2022/00886 22: 2022-08-02 23: 2020-05-04
43: 2022-02-14
52: Class 14 24: Part A
71: HMD Global Oy
33: EM(FI) 31: 008859417 32: 2022-02-14
54: MOBILE PHONES
57: The design is for a mobile phone which comprises an elongate rectangular housing with rounded corners having a front face, rear face, and a peripheral sidewall. The sidewall is flat and perpendicular to the front and rear faces around most of its thickness but is bevelled at a front where it merges with the front face. A top and bottom of the sidewall are thicker than sides of the sidewall, with sides of the rear face curving forwardly to meet the sides of the sidewall. The front face encapsulates a rectangular screen that occupies most of the front face, having thin side bezels and wider top and bottom bezels. The rear face of the phone includes a rectangular element with rounded corners located towards a top left corner of the housing within which a round camera elements are positioned.

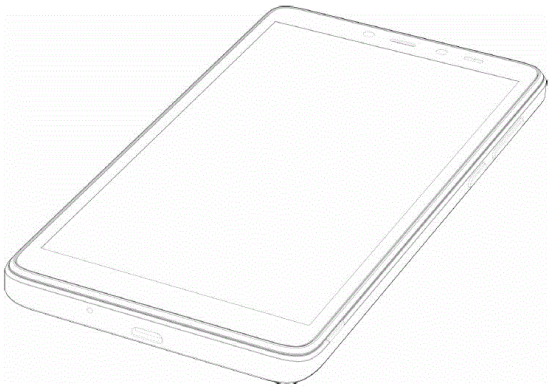

Figure 1

Three-dimensional view

21: A2022/00887 22: 2022-08-02 23: 2020-05-04
43: 2022-02-14
52: Class 14 24: Part A
71: HMD Global Oy
33: EM(FI) 31: 008858187 32: 2022-02-14
54: MOBILE PHONES
57: The design is for a mobile phone which comprises an elongate rectangular housing with rounded corners having a front face, rear face, and a peripheral sidewall. The sidewall is flat and perpendicular to the front and rear faces around most of its thickness but is bevelled at a front where it merges with the front face. The rear face curves forwardly around its periphery to meet the sidewall. The front face encapsulates a rectangular screen that occupies most of the front face, having thin side and top bezels and a wider bottom bezel and having a central notch at the top bezel. The rear face of the phone includes a round element within which two camera elements are positioned one above the other. A smaller round sensor is positioned below the round element.

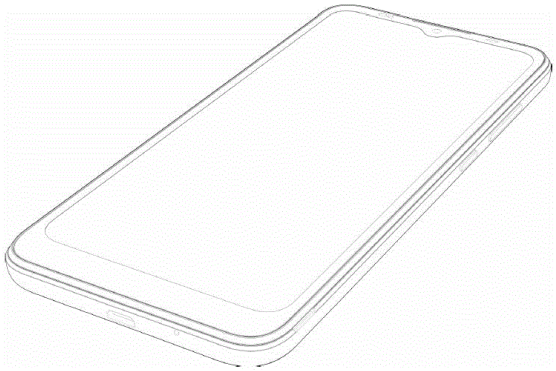

Figure 1

Three-dimensional view

21: A2022/00906 22: 2022-08-10 23: 2020-05-04
43: 2023-03-03
52: Class 14 24: Part A
71: SONY INTERACTIVE ENTERTAINMENT INC.
33: JP 31: 2022-003427 32: 2022-02-22
54: HEAD-MOUNTED DISPLAY
57: The design is applied to head-mounted display and is shown in perspective front, top, and right side view in the drawing showing the overall appearance thereof.

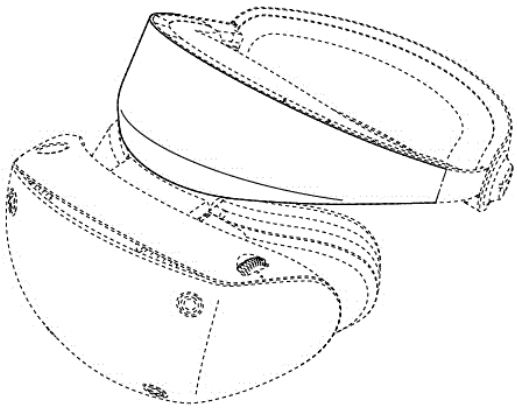

21: A2022/00908 22: 2022-08-10 23: 2020-05-04
43: 2023-03-03
52: Class 14 24: Part A
71: SONY INTERACTIVE ENTERTAINMENT INC.
33: JP 31: 2022-003425 32: 2022-02-22
54: HEAD-MOUNTED DISPLAY
57: The design is applied to head-mounted display and is shown in perspective front, top, and right side view in the drawing showing the overall appearance thereof.

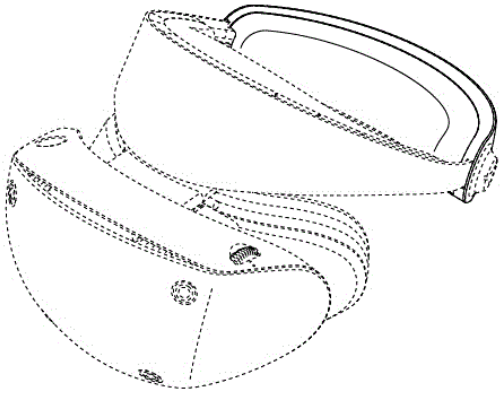

21: A2022/00907 22: 2022-08-10 23: 2020-05-04
43: 2023-03-03
52: Class 14 24: Part A
71: SONY INTERACTIVE ENTERTAINMENT INC.
33: JP 31: 2022-003426 32: 2022-02-22
54: HEAD-MOUNTED DISPLAY
57: The design is applied to head-mounted display and is shown in perspective front, top, and right side view in the drawing showing the overall appearance thereof.

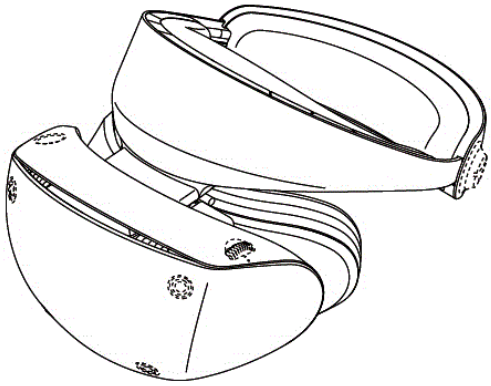

21: A2022/00909 22: 2022-08-10 23: 2020-05-04
43: 2023-03-03
52: Class 12 24: Part A
71: ARTISAN VEHICLE SYSTEMS, INC.
33: US 31: 29/826,393 32: 2022-02-11
54: MINING TRUCK
57: The design for which protection is claimed relates to a mining truck shown in perspective front view in the drawing showing the overall appearance thereof.

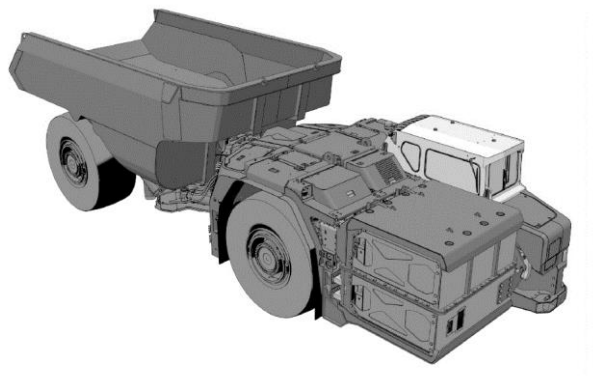

21: A2022/00911 22: 2022-08-10 23: 2020-05-04
43: 2022-02-11
52: Class 32 24: Part A
71: Johnson & Johnson Consumer Inc.
33: US 31: 29/826,351 32: 2022-02-11
54: GRAPHIC DESIGNS FOR PRODUCT PACKAGING
57: The design is for an image graphic associated with instructional language regarding product use. The image graphic shows that, upon completing the instructed user dilution, a smaller bottle of a concentrated formulation content provides benefits equal to that of a larger bottle of the formulation content diluted by manufacturer during initial manufacturing.

Figure 1

Face-on view

21: A2022/00912 22: 2022-08-10 23: 2020-05-04
43: 2022-02-11
52: Class 9 24: Part A
71: Johnson & Johnson Consumer Inc.
33: US 31: 29/826,351 32: 2022-02-11
54: GRAPHIC DESIGNS FOR PRODUCT PACKAGING
57: The design is for an image graphic associated with instructional language regarding product use. The image graphic shows that, upon completing the instructed user dilution, a smaller bottle of a concentrated formulation content provides benefits equal to that of a larger bottle of the formulation content diluted by manufacturer during initial manufacturing.

Figure 1

Face-on view

21: A2022/00913 22: 2022-08-10 23: 2020-05-04
43: 2022-02-11
52: Class 14 24: Part A
71: Johnson & Johnson Consumer Inc.
33: US 31: 29/826,351 32: 2022-02-11
54: GRAPHIC DESIGNS FOR PRODUCT PACKAGING
57: The design is for an image graphic associated with instructional language regarding product use. The image graphic shows that, upon completing the instructed user dilution, a smaller bottle of a concentrated formulation content provides benefits equal to that of a larger bottle of the formulation content diluted by manufacturer during initial manufacturing.

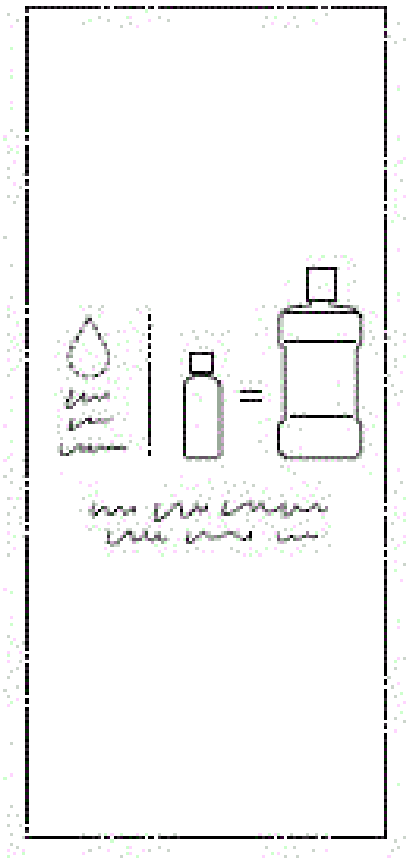

Figure 1

Face-on view

21: A2022/00914 22: 2022-08-10 23: 2020-05-04
43: 2022-02-11
52: Class 19 24: Part A
71: Johnson & Johnson Consumer Inc.
33: US 31: 29/826,351 32: 2022-02-11
54: GRAPHIC DESIGNS FOR PRODUCT PACKAGING
57: The design is for an image graphic associated with instructional language regarding product use. The image graphic shows that, upon completing the instructed user dilution, a smaller bottle of a concentrated formulation content provides benefits equal to that of a larger bottle of the formulation content diluted by manufacturer during initial manufacturing.

Figure 1

Face-on view

21: A2022/00921 22: 2022-08-12 23: 2020-05-04
43: 2023-03-03
52: Class 14 24: Part A
71: SONY INTERACTIVE ENTERTAINMENT INC.
33: JP 31: 2022-003429 32: 2022-02-22
54: HEAD-MOUNTED DISPLAY
57: The design is applied to a head-mounted display and is shown in perspective rear, bottom, and left side view in the drawing showing the overall appearance thereof.

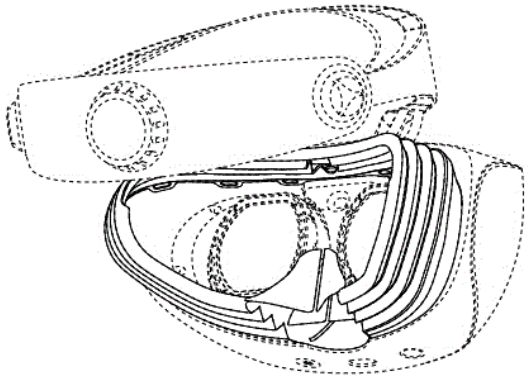

21: A2022/00922 22: 2022-08-12 23: 2020-05-04
43: 2023-03-03
52: Class 14 24: Part A
71: SONY INTERACTIVE ENTERTAINMENT INC.
33: JP 31: 2022-003428 32: 2022-02-22
54: HEAD-MOUNTED DISPLAY
57: The design is applied to a head-mounted display and is shown in perspective front, top, and right side view in the drawing showing the overall appearance thereof.

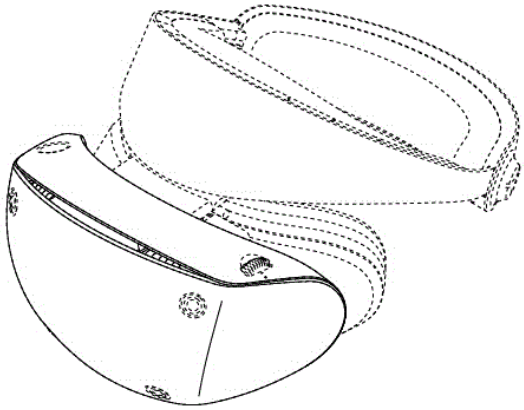

21: A2022/00923 22: 2022-08-12 23: 2020-05-04
43: 2023-03-03
52: Class 14 24: Part A
71: SONY INTERACTIVE ENTERTAINMENT INC.
33: JP 31: 2022-003430 32: 2022-02-22
54: LIGHT SHIELD
57: The design is applied to a light shield and is shown in perspective front, top, and right side view in the drawing showing the overall appearance thereof.

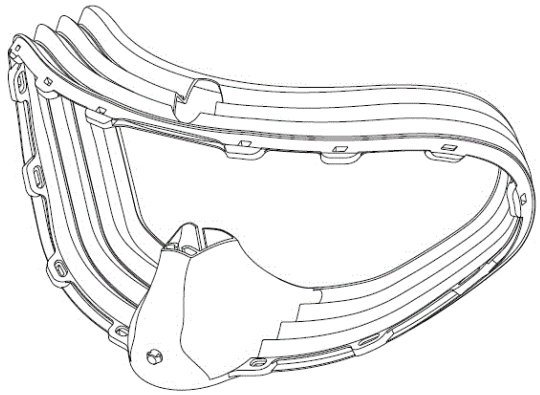

21: A2022/00930 22: 2022-08-15 23: 2020-05-04
43: 2023-03-03
52: Class Class 12. 24: Part A
71: FERRARI S.P.A.
33: IB 31: DM/219174 32: 2022-02-16
54: Car
57: The design relates to a car. The features of the design are those of shape and/or configuration and/or pattern and/or ornamentation.

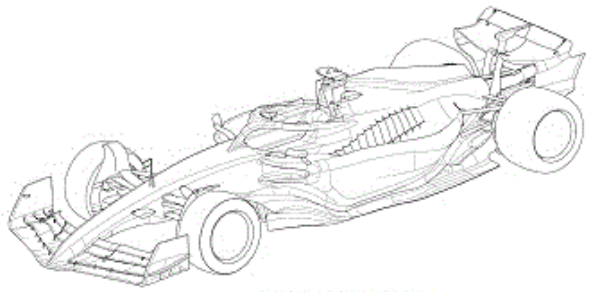

FRONT PERSPECTIVE VIEW

21: A2022/00941 22: 2022-08-16 23: 2020-05-04
43: 2023-03-03
52: Class Class 9. 24: Part A
71: MAISON PSYCHÉ
33: EM 31: 008870984-0001 32: 2022-02-25
54: Perfume Bottle
57: The design relates to a perfume bottle. The features of the design are those of shape and/or configuration and/or pattern and/or ornamentation.

PERSPECTIVE VIEW

21: A2022/00943 22: 2022-08-17 23: 2020-05-04
43: 2023-03-03
52: Class Class 12. 24: Part A
71: FERRARI S.P.A.
33: IB 31: DM/219369 32: 2022-02-18
54: Car
57: The design relates to a car. The features of the design are those of shape and/or configuration and/or pattern and/or ornamentation.

FRONT PERSPECTIVE VIEW

21: A2022/00944 22: 2022-08-17 23: 2020-05-04
43: 2023-03-03
52: Class Class 21. 24: Part A
71: FERRARI S.P.A.
33: IB 31: DM/219616 32: 2022-02-18
54: Toy Car
57: The design relates to a toy car. The features of the design are those of shape and/or configuration and/or pattern and/or ornamentation.

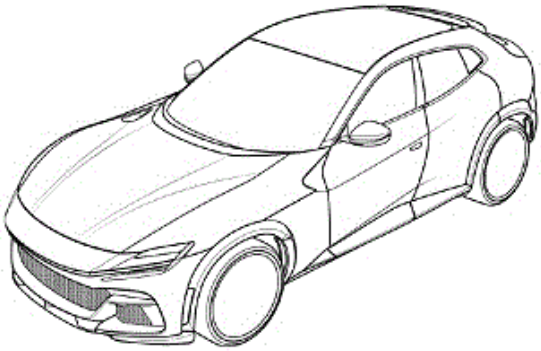

FRONT PERSPECTIVE VIEW

21: A2022/00958 22: 2022-08-17 23: 2020-05-04
43: 2023-03-09
52: Class 09 24: Part A
71: SCHALDOR PLASTICS CC
54: CONTAINER
57: The design relates to a 5 liter container, the features of the design are those of shape, configuration and/or pattern.

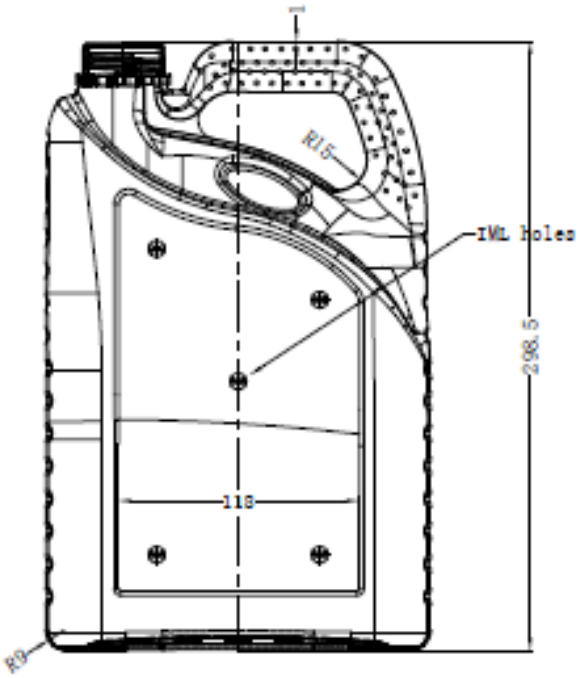

21: A2022/00959 22: 2022-08-17 23: 2020-05-04
43: 2023-03-09
52: Class 09 24: Part A
71: SCHALDOR PLASTICS CC
54: CONTAINER
57: The design relates to a 1 liter container, the features of the design are those of shape, configuration and/or pattern.

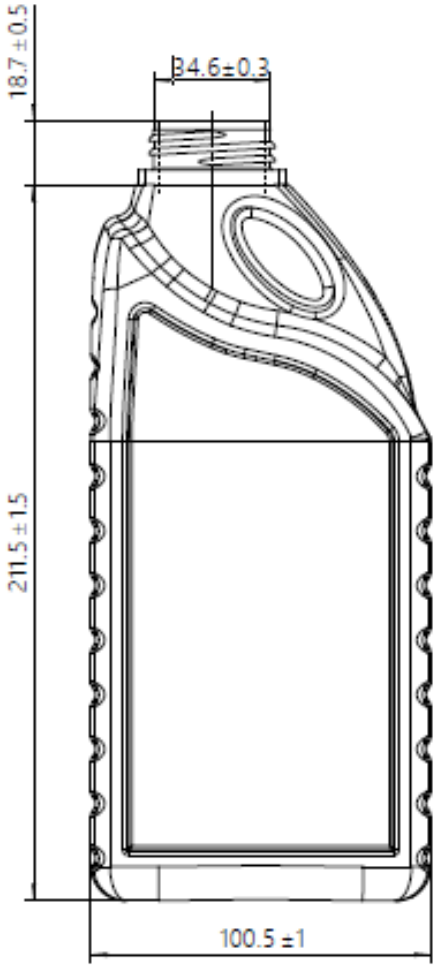

21: A2022/00960 22: 2022-08-17 23: 2020-05-04
43: 2023-03-09
52: Class 09 24: Part A
71: SCHALDOR PLASTICS CC
54: CONTAINER
57: The design relates to a 500ml container, the features of the design are those of shape, configuration and/or pattern.

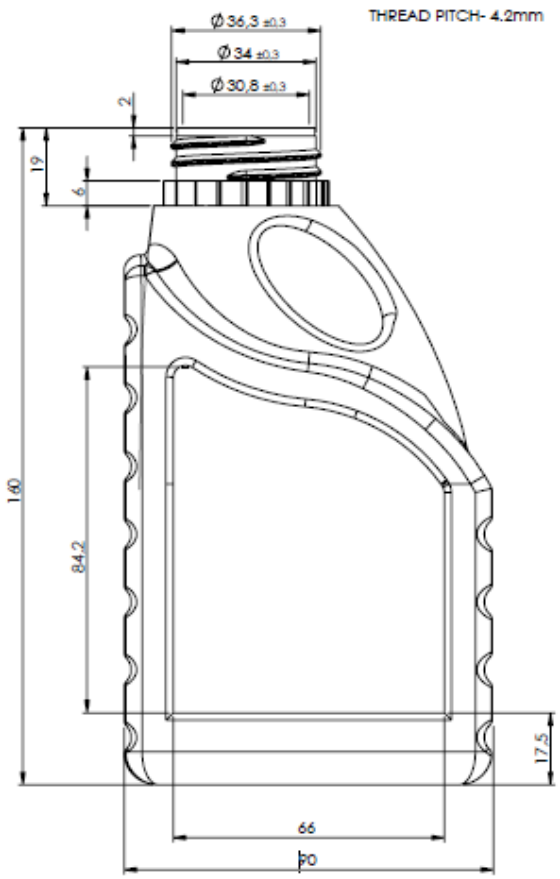

21: A2022/00966 22: 2022-08-18 23: 2020-05-04
43: 2022-02-18
52: Class 2 24: Part A
71: Crocs, Inc.
33: US 31: 29/827,344 32: 2022-02-18
54: FOOTWEAR
57: The present design consists of a shoe having features that make it new and original. The present design comprises a slide shoe characterized by raised bumps on a rear portion of a sole. The sole include a taller heel portion and a shorter toe portion. An upper of the slide shoe includes a number of round openings.

Figure 1

Three-dimensional view

21: A2022/00968 22: 2022-08-18 23: 2020-05-04
43: 2023-03-09
52: Class 19 24: Part A
71: NET RIANT INVESTMENT COMPANY (PTY) LIMITED
54: BOOK COVER
57: The features of the design for which protection is claimed reside in the shape and/or configuration and/or ornamentation of a removable book cover substantially as illustrated in the accompanying drawings

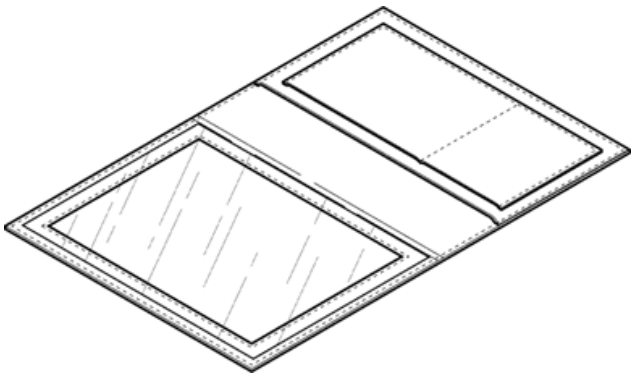

21: A2022/00975 22: 2022-08-22 23: 2020-05-04
43: 2022-07-20
52: Class 28 24: Part A
71: Lashify, Inc.
33: US 31: 29/846,969 32: 2022-07-20
54: LASH APPARATUSES
57: The design relates to a lash apparatus that is temperature-adjustable for natural eyelashes and artificial eyelash extensions. The apparatus includes an enlarged, substantially crescent/banana-shaped handle and a pair of opposing arcuate arms coupled to the handle. The arms diverge away from the handle. A convex shaped formation is provided on either side of the handle at a first end thereof near a

proximal end of the arms. A circular formation is provided on either side of the handle near a second end thereof.

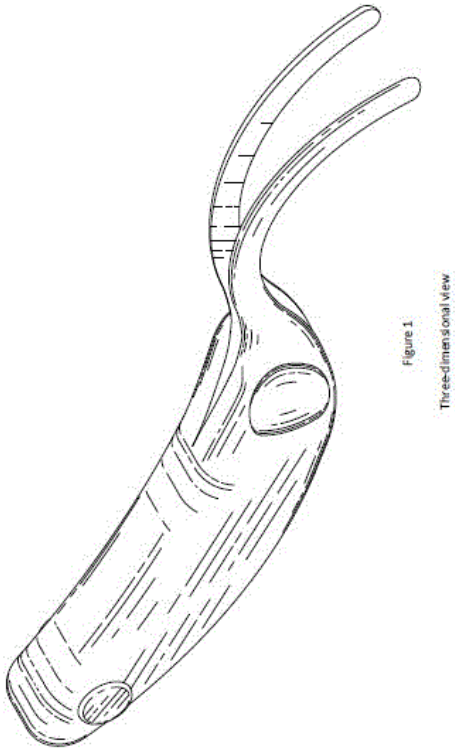

21: A2022/00976 22: 2022-08-22 23: 2020-05-04
43: 2022-07-20
52: Class 28 24: Part A
71: Lashify, Inc.
33: US 31: 29/846,969 32: 2022-07-20
54: LASH APPARATUSES
57: The design relates to a lash apparatus that is temperature-adjustable for natural eyelashes and artificial eyelash extensions. The apparatus includes an enlarged, substantially crescent/banana-shaped handle and a pair of opposing, long arcuate arms coupled to the handle. The arms diverge away from the handle.

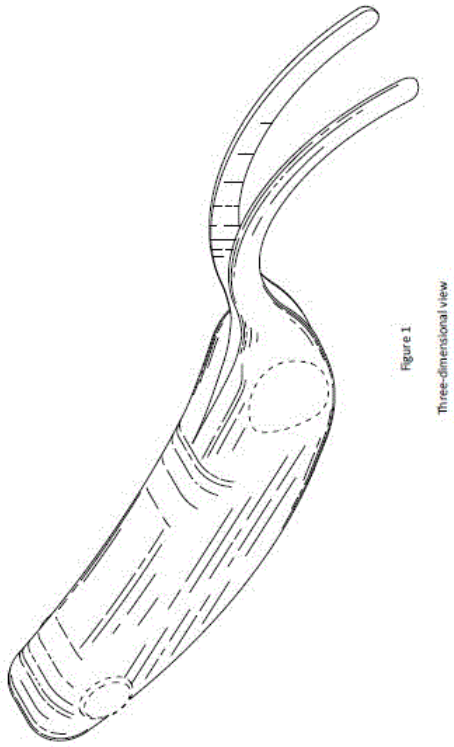

21: A2022/00977 22: 2022-08-22 23: 2020-05-04
43: 2022-07-20
52: Class 28 24: Part A
71: Lashify, Inc.
33: US 31: 29/846,969 32: 2022-07-20
54: LASH APPARATUSES
57: The design relates to a lash apparatus that is temperature-adjustable for natural eyelashes and artificial eyelash extensions. The apparatus includes a pair of opposing, long arcuate arms coupled to a middle section of a portion of an enlarged handle. The arms diverge away from the handle.

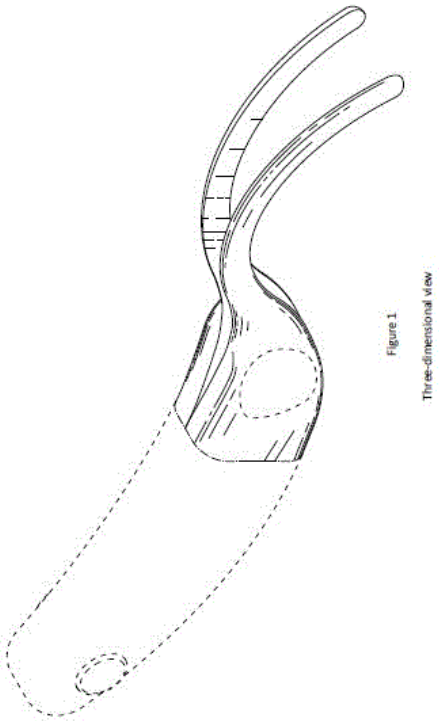

Figure 1

Three-dimensional view

21: A2022/00981 22: 2022-08-22 23: 2020-05-04
43: 2022-02-22
52: Class 2 24: Part A
71: Crocs, Inc.
33: US 31: 29/827,734 32: 2022-02-22
54: FOOTWEAR
57: The design is for footwear, in particular, a sandal, which has a sole having opposed top and bottom surfaces and opposed raised sidewalls. The top surface and sidewalls curve gently upwardly from a front portion towards a mid-portion and extends to a heel portion. The top surface includes a central recessed portion and includes a pattern of raised formations arranged in curved lines. A raised Y-shaped element with a plurality of raised dots is positioned at the front portion of the top surface. A V-shaped strap element extends from a toe end to opposite sidewalls and towards the heel portion. The bottom surface includes a large frontal oval gripping element and a rear oval gripping element, each including a pattern of spaced-apart undulating lines. A logo of crocs in letters is centrally positioned in between the gripping elements.

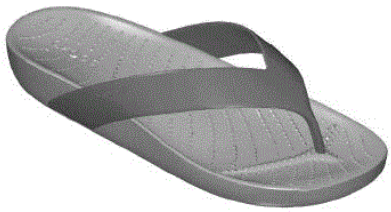

Figure 1

Three-dimensional view

21: A2022/00982 22: 2022-08-22 23: 2020-05-04
43: 2022-02-22
52: Class 2 24: Part A
71: Crocs, Inc.
33: US 31: 29/827,810 32: 2022-02-22
54: FOOTWEAR
57: The design is for footwear having a sole with opposed top and bottom surfaces and opposed raised sidewalls. The top surface and sidewalls curve gently inwardly from an inclined front portion towards a mid-portion and curve gently upwardly to a heel portion. The sidewalls include a pattern of three spaced-apart undulating continuous, peripherally extending lines. A bottom portion of the sidewall and the bottom surface include a recess. The top surface includes a central recessed portion. A raised Y-shaped element with a plurality of raised dots is positioned at the front/toe portion of the top surface. A broad upper extends laterally across the mid-portion.

Figure 1

Three-dimensional view

21: A2022/00983 22: 2022-08-22 23: 2020-05-04
43: 2022-02-22
52: Class 2 24: Part A
71: Crocs, Inc.
33: US 31: 29/827,812 32: 2022-02-22
54: FOOTWEAR

57: The design is for footwear, in particular, a sandal, which has a sole having opposed top and bottom surfaces and opposed raised sidewalls. The top surface and sidewalls curve gently upwardly from a front portion towards a mid-portion and extends to a heel portion. The top surface includes a central recessed portion.

Figure 1

Three-dimensional view

21: A2022/00984 22: 2022-08-23 23: 2020-05-04
43: 2022-02-24
52: Class 23 24: Part A
71: UPL Corporation Limited, UPL Europe Ltd.
33: JP 31: 2022-003587 32: 2022-02-24
54: NOZZLES
57: The design is for a nozzle. The nozzle comprises a circular cylindrical body portion having an end panel at one end. A circular hole extends through the end panel offset from the centre and a circular cylindrical sleeve protrudes inwardly in register with the hole to define a bore that is offset from and parallel with the center of the cylindrical body portion. A rectangular hole extends through the end panel. The nozzle includes a substantially upright sector-shaped spray head which is connected to the rectangular hole by an intermediate tubular member which is rectangular in transverse cross-section. The spray head includes an outwardly convex or arcuate top and sides which extend from the top to the tubular member. A plurality of spaced apart holes extend through the top.

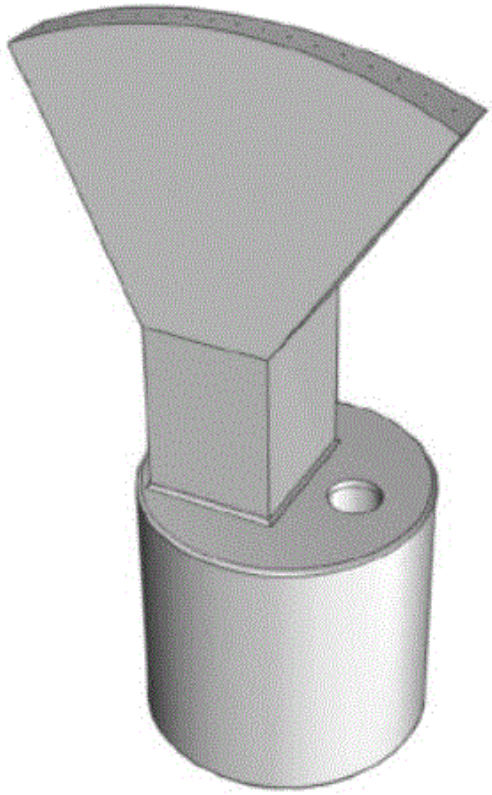

Figure 1
Three-dimensional view

21: A2022/00985 22: 2022-08-23 23: 2020-05-04
43: 2023-03-09
52: Class 12 24: Part A
71: BYD COMPANY LIMITED
33: CN 31: 202230090474.5 32: 2022-02-24
54: AUTOMOBILE
57: The design relates to an automobile. The features of the design are those of shape and/or configuration and/or pattern and/or ornamentation.

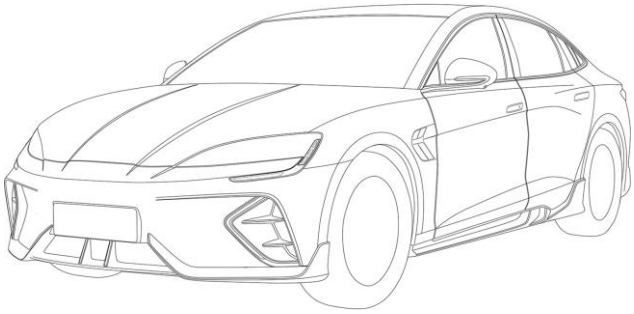

21: A2022/00987 22: 2022-08-25 23: 2020-05-04
43: 2022-08-25
52: Class 23 24: Part A

71: HOT NOZZLE (PTY) LTD.
54: WATER HEATERS
57: The design is for a water heater comprising a housing having a dome shaped lid, a curved base, a substantially flat front face, curved side walls extending peripherally rearwardly from the front face, a rear face and curved rear side walls. The front face defines an outlet opening at a top portion thereof. A L-shaped switch is fitted on the front face at a bottom portion thereof, and ring-shaped dial having textured grooves on its surface is fitted on the front face above the switch. The rear face defines an inlet opening at a top portion thereof which is in register with the outlet opening on the front face. The rear face, lid, and side walls of the front face and rear face define a plurality of vent openings. The base has a flat face that is arranged to form a continuous flat surface with the front face.

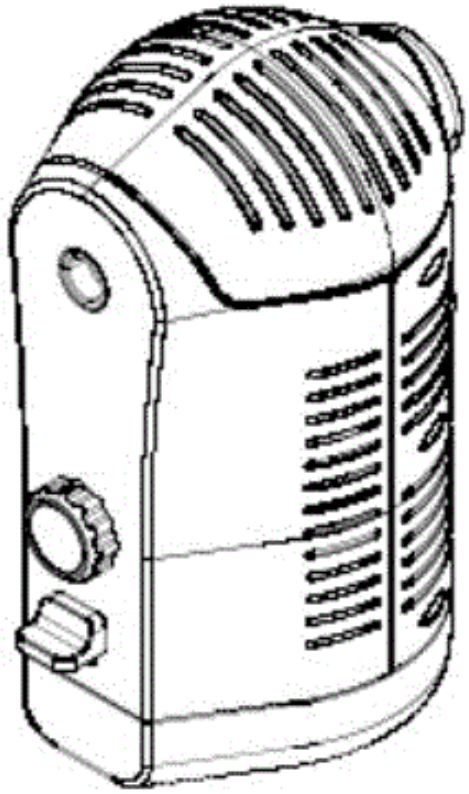

Three-dimensional view

21: A2022/00998 22: 2022-08-26 23: 2020-05-04
43: 2023-03-09
52: Class 15 24: Part A
71: ROVIC AND LEERS (PTY) LTD

54: ADJUSTING RACK
57: The design is applied to an adjusting rack. The features of the design for which protection is claimed are those of the shape and/or configuration and/or pattern and/or ornamentation of the adjusting rack, substantially as illustrated in the accompanying representations of Figures 1 to 8.

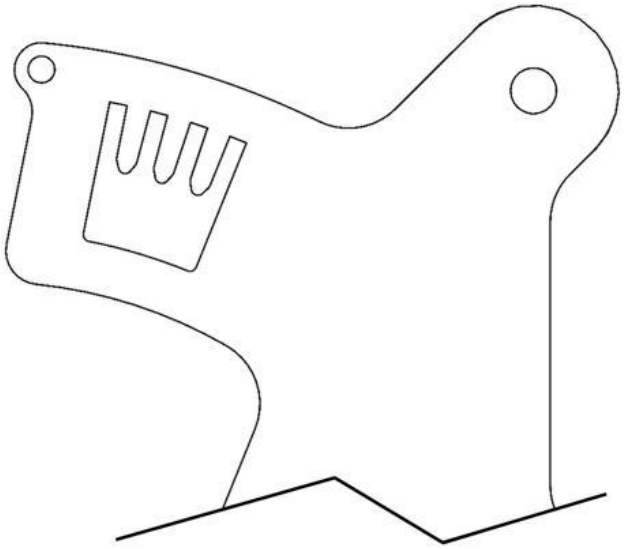

FIGURE 1
FRONT VIEW

21: A2022/01000 22: 2022-08-26 23: 2020-05-04
43: 2023-03-09
52: Class 15 24: Part A
71: ROVIC AND LEERS (PTY) LTD
54: ADJUSTING RACK
57: The design is applied to an adjusting rack. The features of the design for which protection is claimed are those of the shape and/or configuration and/or pattern and/or ornamentation of the adjusting rack, substantially as illustrated in the accompanying representations of Figures 1 to 8.

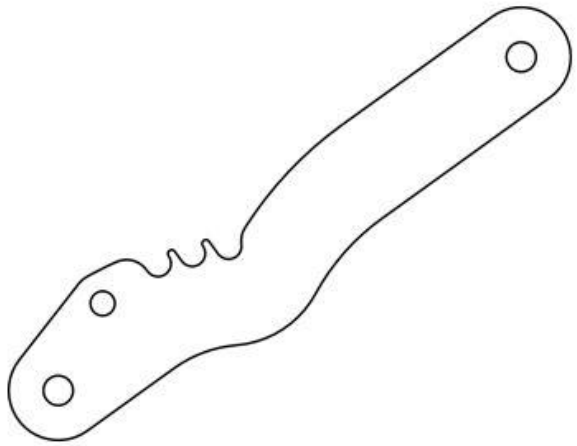

FIGURE 1
FRONT VIEW

21: A2022/01002 22: 2022-08-26 23: 2020-05-04
43: 2023-03-03
52: Class 15 24: Part A
71: ROVIC AND LEERS (PTY) LTD
54: SCRAPER ASSEMBLY
57: The design is applied to a scraper assembly. The features of the design for which protection is claimed are those of the shape and/or configuration and/or pattern and/or ornamentation of the scraper assembly, substantially as illustrated in the accompanying representations of Figures 1 to 10.

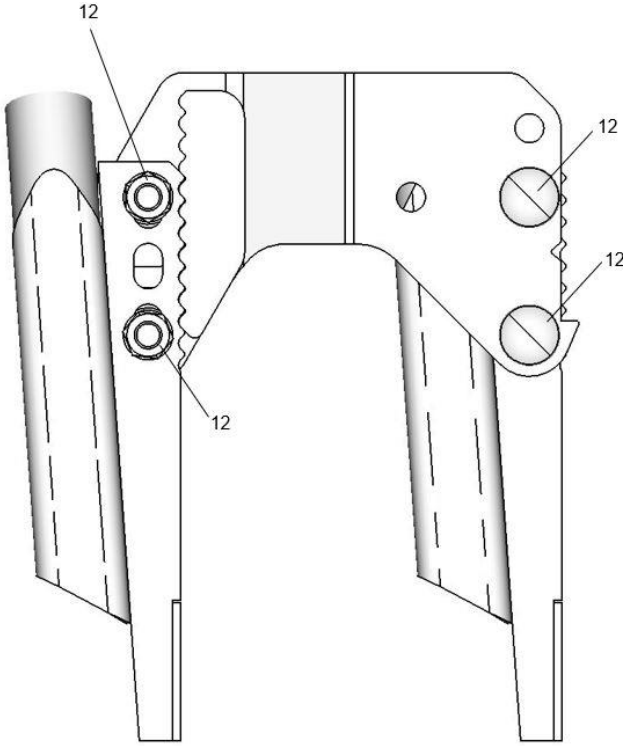

21: A2022/01004 22: 2022-08-26 23: 2020-05-04
43: 2023-03-09
52: Class 15 24: Part A
71: ROVIC AND LEERS (PTY) LTD
54: PLANTER
57: The design is applied to a planter. The features of the design for which protection is claimed are those of the shape and/or configuration and/or pattern and/or ornamentation of the planter, substantially as illustrated in the accompanying representations. Features shown in broken lines do not form part of the design and are disclaimed.

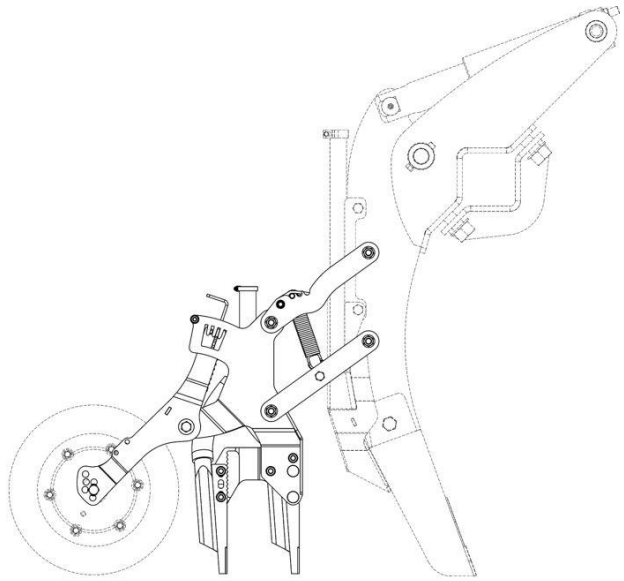

FIGURE 1
FRONT VIEW

21: A2022/01007 22: 2022-08-26 23: 2020-05-04
43: 2022-08-26
52: Class 8 24: Part A
71: TaeguTec Ltd.
54: REAMERS
57: The design is for a reamer comprising a substantially cylindrical body defining a central bore that extends axially between an upper and lower opening defined by a top and bottom face of the reamer, respectively. The cylindrical body is D3 (dihedral order 3) symmetrical and comprises three symmetrical sectors. Each sector has a radially thinner, but axially longer upper portion separated from a radially wider, but axially shorter, lower portion by an interrupted circumferential groove. The upper and lower portions have aligned flatter sections with a larger radius of curvature and misaligned curvier sections with a smaller radius of curvature; the curvier section of the lower portion project further radially outwardly than the curvier section of the upper portion. A footprint of the lower portions resembles a Reuleaux triangle. The bottom face defines a raised, inner concentric circular projection.

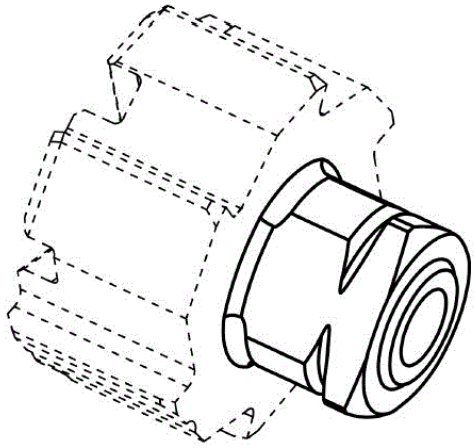

Figure 1
Three-dimensional view

21: A2022/01009 22: 2022-08-29 23: 2020-05-04
43: 2022-08-29
52: Class 3 24: Part A
71: JONE 7 (PTY) LTD.
54: SUITCASES
57: The design relates to a suitcase, in particular a two-wheeled suitcase with telescopically extendable handle toward a rear. The suitcase has a rigid body which is rectangular in cross-section and has generally rounded edges and corners. The two wheels are disposed laterally toward the rear of the body in curved recesses designed to accommodate the wheels. The body comprises a lower base having longitudinally extending ribs over sidewalls of the base and a lid or cover which is hingedly connected over a top of the base. The hinge is toward a front of the body. The suitcase has a second, generally U-shaped carry handle mounted to opposing upper sides of the base. The telescopic handle has an oval handgrip. A plurality of diamond-shaped formations, decreasing in size mediolaterally, are provided on a front upper portion of the lid.

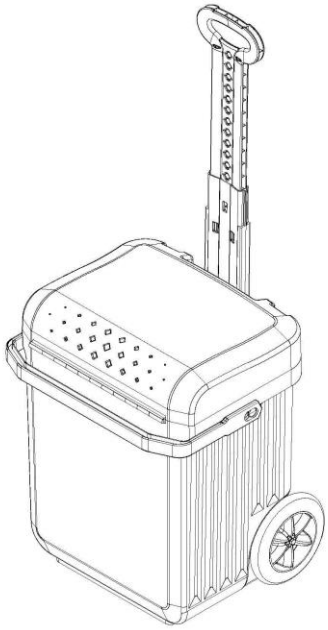

21: A2022/01011 22: 2022-08-29 23: 2020-05-04
43: 2022-08-29
52: Class 25 24: Part A
71: BETRAM (PROPRIETARY) LIMITED
54: BUILDING UNITS AND CONSTRUCTION ELEMENTS
57: The design is in respect of a building unit or construction element in the form of a panel, typically formed of a precast cementitious material, having a repeating surface pattern comprising a plurality of triangular formations, each of which is sub-divided by webs into three substantially identical trapezium shapes. The design further extends to a structure, typically a toilet, which incorporates side walls and a rear wall, one or more of the side walls and the rear wall includes one or more of the panels.

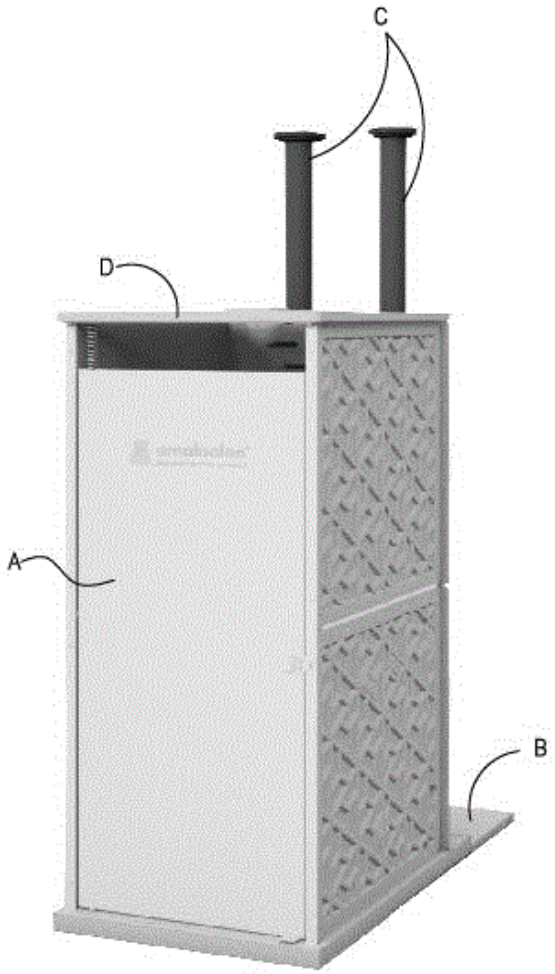

21: A2022/01014 22: 2022-08-30 23: 2020-05-04
43: 2022-08-30
52: Class 12 24: Part A
71: SUPERCART SOUTH AFRICA (PTY) LTD
54: CHASSIS FOR A TROLLEY
57: The design is applied to a chassis for a trolley, and in particular to an all plastic shopping trolley. The features of the design for which protection is claimed include the shape and/or configuration of a chassis for a trolley, substantially as illustrated in the accompanying representations.

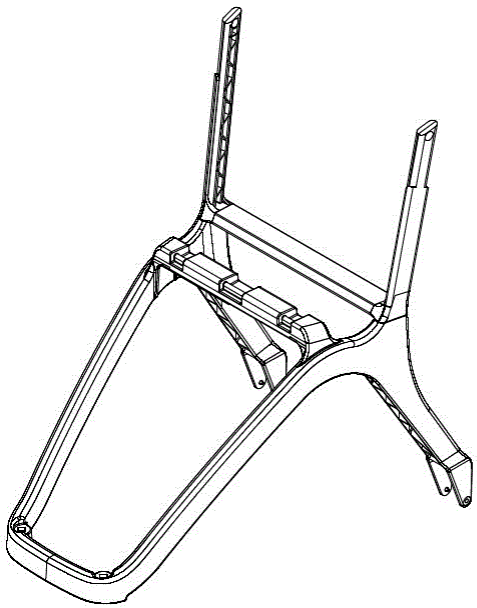

Three-dimensional view chassis only

21: A2022/01015 22: 2022-08-30 23: 2020-05-04
43: 2022-08-30
52: Class 12 24: Part A
71: SUPERCART SOUTH AFRICA (PTY) LTD
54: BASKET FOR A TROLLEY
57: The design is applied to a basket for a trolley, and in particular to an all plastic shopping trolley. The features of the design for which protection is claimed include the shape and/or configuration of a basket for a trolley, substantially as illustrated in the accompanying representations.

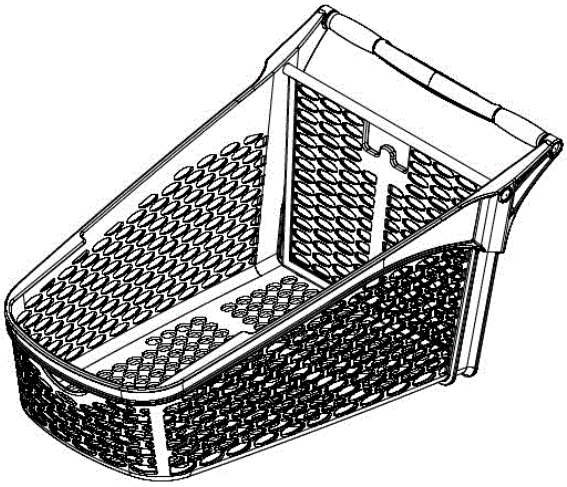

Three-dimensional view basket only

21: A2022/01016 22: 2022-08-31 23: 2020-05-04
43: 2022-03-07
52: Class 24 24: Part A
71: Henke-Sass, Wolf GmbH
33: EM(DE) 31: 008881924-0001 32: 2022-03-07
54: SYRINGES
57: The design is for a syringe and comprises a main body with a cylindrical portion with a tapered stem, a plunger connected to an elongate plunger rod positioned within the cylindrical portion and protruding from a rear of the main body, and a V-shaped handle having a curved first handle part connected to the main body and a curved second handle part pivotally connected at a bottom end to the first handle part. An elongate back end of the plunger rod extends from a circular member at the first handle part to an inner side of the second handle part. A top portion of the second handle part tapers outwardly, with a circular stop with an elongate spike at its free end. The main body comprises a cylindrical dose wheel at the first handle part.

Figure 1

Three-dimensional view

21: A2022/01017 22: 2022-08-31 23: 2020-05-04
43: 2022-03-07
52: Class 24 24: Part A
71: Henke-Sass, Wolf GmbH
33: EM(DE) 31: 008881924-0002 32: 2022-03-07
54: SYRINGES
57: The design is for a syringe and comprises a main body with a cylindrical portion with a tapered stem, a plunger connected to an elongate plunger rod positioned within the cylindrical portion and protruding from a rear of the main body, and a V-shaped handle having a curved first handle part connected to the main body and a thicker curved second handle part pivotally connected at a bottom end to the first handle part. An elongate back end of the plunger rod extends from a circular member at the first handle part to an inner side of the second handle part. A cylindrical tube connector projects downwardly at an angle from a back end of the plunger rod. The main body comprises a cylindrical dose wheel at the first handle part.

Figure 1

Three-dimensional view

21: A2022/01018 22: 2022-08-31 23: 2020-05-04
43: 2022-03-07
52: Class 24 24: Part A
71: Henke-Sass, Wolf GmbH
33: EM(DE) 31: 008881924-0003 32: 2022-03-07
54: SYRINGES
57: The design is for a syringe and comprises a main body with a cylindrical portion with a tapered stem, a plunger connected to an elongate plunger rod positioned within the cylindrical portion and protruding from a rear of the main body, and a V-shaped handle having a curved first handle part connected to the main body and a thicker curved second handle part pivotally connected at a bottom end to the first handle part. An elongate back end of the plunger rod extends from a circular member at the first handle part to an inner side of the second handle part. A free end of the second handle part comprises a stop with a spike and a circular collar. The main body comprises a cylindrical dose wheel at the first handle part.

Figure 1

Three-dimensional view

21: A2022/01019 22: 2022-08-31 23: 2020-05-04
43: 2022-03-07
52: Class 24 24: Part A
71: Henke-Sass, Wolf GmbH
33: EM(DE) 31: 008881924-0004 32: 2022-03-07
54: SYRINGES
57: The design is for a syringe and comprises a main body with a cylindrical portion with a tapered stem, a plunger connected to an elongate plunger rod positioned within the cylindrical portion and protruding from a rear of the main body, and a V-shaped handle having a curved first handle part connected to the main body and a thicker curved second handle part pivotally connected at a bottom end to the first handle part. An elongate back end of the plunger rod extends from a circular member at the first handle part to an inner side of the second handle part. A free end of the second handle part comprises a stop with a spike and a cylindrical basket defining a recess. The main body comprises a cylindrical dose wheel at the first handle part.

Figure 1

Three-dimensional view

21: A2022/01022 22: 2022-08-31 23: 2020-05-04
43: 2022-03-02
52: Class 21 24: Part A
71: adp Merkur GmbH
33: EM(DE) 31: 008875686-0001 32: 2022-03-02
54: MACHINES FOR GAMES OF CHANCE
57: The design shows a coin-operated gaming machine which includes three vertically stacked screens mounted to a pedestal. The top or uppermost screen is slanted forward. A control panel of the lowermost screen includes a group of controls. The controls are variable developed as a touchscreen or as keys. The control panel is illuminated. In addition, the pedestal is illuminated. Also, the illuminated indicators are able to change colors.

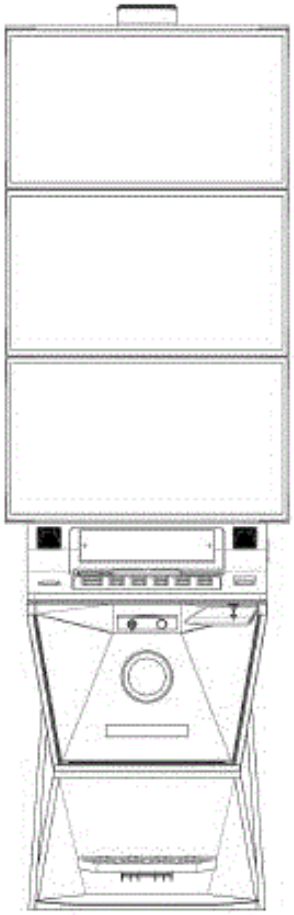

Figure 1

Front view

21: A2022/01023 22: 2022-08-31 23: 2020-05-04
43: 2023-03-15
52: Class Class 10. 24: Part A
71: ROLEX SA
33: CH 31: 146627 32: 2022-03-01
54: Watch Dial
57: The design relates to a watch dial. The features of the design are those of shape and/or configuration and/or pattern and/or ornamentation.

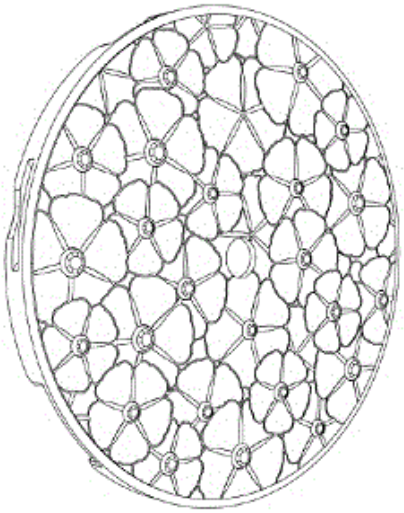

PERSPECTIVE VIEW

21: A2022/01024 22: 2022-08-31 23: 2020-05-04
43: 2023-03-15
52: Class Class 10. 24: Part A
71: ROLEX SA
33: CH 31: 146627 32: 2022-03-01
54: Watch Dial
57: The design relates to a watch dial. The features of the design are those of shape and/or configuration and/or pattern and/or ornamentation.

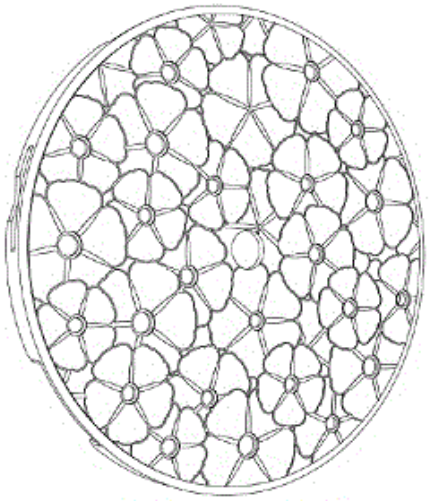

PERSPECTIVE VIEW

21: A2022/01025 22: 2022-08-31 23: 2020-05-04
43: 2023-03-09
52: Class Class 10. 24: Part A
71: ROLEX SA
33: CH 31: 146628 32: 2022-03-01
54: Watch Dial

57: The design relates to a watch dial. The features of the design are those of shape and/or configuration and/or pattern and/or ornamentation.

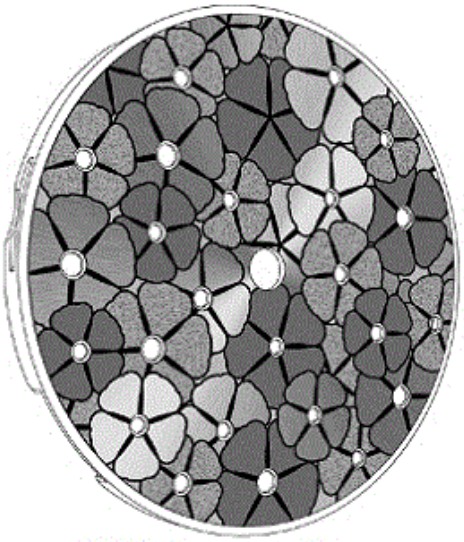

PERSPECTIVE VIEW

21: A2022/01030 22: 2022-09-02 23: 2020-05-04
43: 2023-04-20
52: Class 07 24: Part A
71: Philips Domestic Appliances Holding B.V.
33: EU 31: 008887491 32: 2022-03-14
54: BLENDER
57: The features of the design for which protection is claimed include the shape and/or pattern and/or configuration of a blender, substantially as shown in the representations.

21: A2022/01031 22: 2022-09-02 23: 2020-05-04
43: 2023-04-20
52: Class 07 24: Part A
71: Philips Domestic Appliances Holding B.V.
33: EU 31: 008887491 32: 2022-03-14
54: BLENDER
57: The features of the design for which protection is claimed include the shape and/or pattern and/or configuration of a blender, substantially as shown in the representations.

21: A2022/01032 22: 2022-09-02 23: 2020-05-04
43: 2023-04-20
52: Class 23 24: Part A
71: HANSGROHE SE
33: EU 31: 008915292-0001 32: 2022-03-22
54: HAND SHOWER
57: The novelty of the design resides in the shape or configuration of a hand shower substantially as shown in the accompanying representation.

21: A2022/01056 22: 2022-09-09 23: 2020-05-04
43: 2023-04-13
52: Class 07 24: Part A
71: Philips Domestic Appliances Holding B.V.
33: EU 31: 008916456-0001 32: 2022-03-24
54: STAND STEAMER
57: The design is for a stand steamer and ironing board. The stand steamer includes a steamer base and an ironing board with a cradle for receiving a steamer head, the ironing board being attached to the steamer base by an upright support pole.

21: A2022/01057 22: 2022-09-09 23: 2020-05-04

43: 2023-04-13
52: Class 07 24: Part A
71: Philips Domestic Appliances Holding B.V.
33: EU 31: 008916456-0003 32: 2022-03-24
54: STAND STEAMER
57: The design is for a stand steamer and ironing board. The stand steamer includes a steamer base and an ironing board with a cradle for receiving a steamer head, the ironing board being attached to the steamer base by two upright support poles.

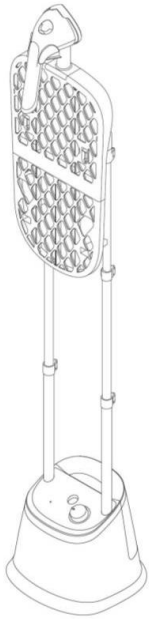

21: A2022/01058 22: 2022-09-09 23: 2020-05-04
43: 2023-04-13
52: Class 07 24: Part A
71: Philips Domestic Appliances Holding B.V.
33: EU 31: 008916456-0005 32: 2022-03-24
54: STAND STEAMER
57: The design is for a stand steamer and ironing board. The stand steamer includes a steamer base and an ironing board with a cradle for receiving a steamer head, the ironing board being attached to the steamer base by two upright support members.

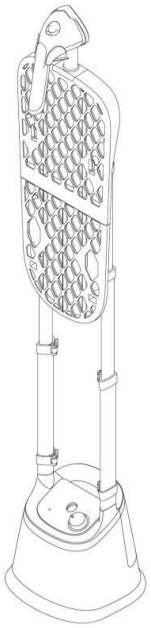

21: A2022/01059 22: 2022-09-09 23: 2020-05-04
43: 2023-04-13
52: Class 07 24: Part A
71: Philips Domestic Appliances Holding B.V.
33: EU 31: 008916456-0013 32: 2022-03-24
54: STEAMER HEAD
57: The design is for a steamer head of a stand steamer and ironing board. The steamer head includes a handle and a dispensing head. In front profile, the dispensing head resembles a generally spherical triangle and includes a plurality of dispensing nozzles.

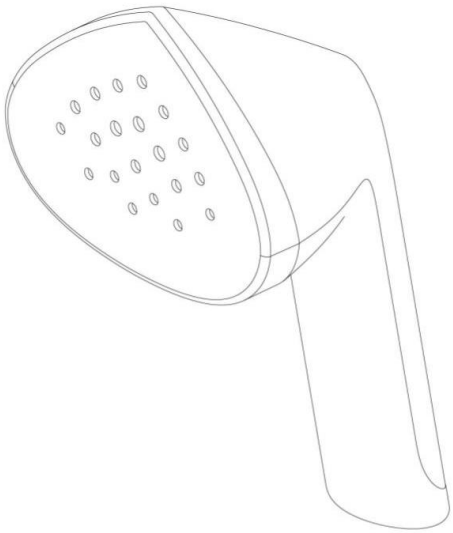

21: A2022/01060 22: 2022-09-09 23: 2020-05-04
43: 2023-04-20
52: Class 07 24: Part A
71: Philips Domestic Appliances Holding B.V.
33: EU 31: 008916456-0015 32: 2022-03-24
54: STEAMER HEAD
57: The design is for a steamer head of a stand steamer and ironing board. The steamer head includes a handle and a dispensing head. In front profile, the dispensing head resembles a generally spherical triangle having a plurality of dispensing nozzles and an array of dispensing nozzles arranged along its periphery.

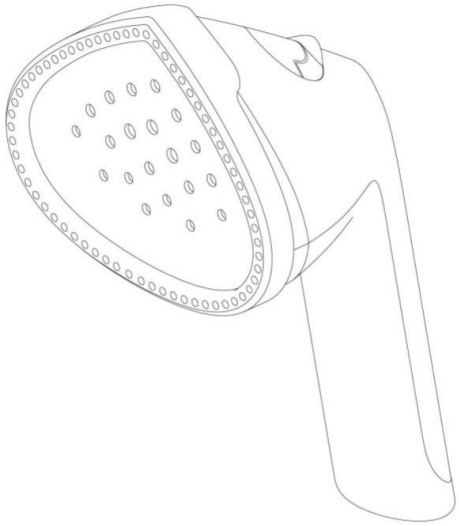

21: A2022/01061 22: 2022-09-09 23: 2020-05-04
43: 2023-04-20
52: Class 07 24: Part A
71: Philips Domestic Appliances Holding B.V.
33: EU 31: 008916456-0017 32: 2022-03-24
54: STEAMER BASE
57: The design is for a steamer base of a stand steamer and ironing board. The steamer base includes a socket for receiving an upright support pole of the stand steamer.

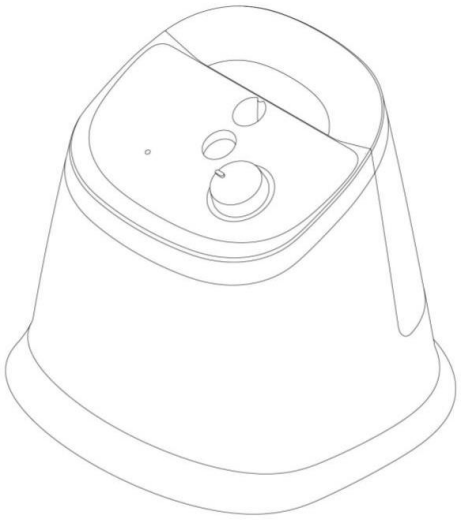

21: A2022/01062 22: 2022-09-09 23: 2020-05-04
43: 2023-04-13
52: Class 07 24: Part A
71: Philips Domestic Appliances Holding B.V.
33: EU 31: 008916456-0021 32: 2022-03-24
54: STEAMER BASE
57: The design is for a steamer base of a stand steamer and ironing board. The steamer base includes two spigot projections for attaching upright support members of the stand steamer.

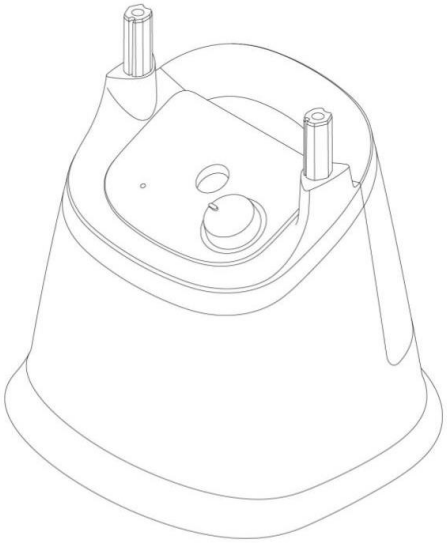

21: A2022/01085 22: 2022-09-16 23: 2020-05-04
43: 2023-04-14
52: Class 12 24: Part A
71: MASERATI S.P.A.
33: IB 31: WIPO114893 32: 2022-03-18

54: CAR
57: The design is for a car in the form of a two-door sports car.

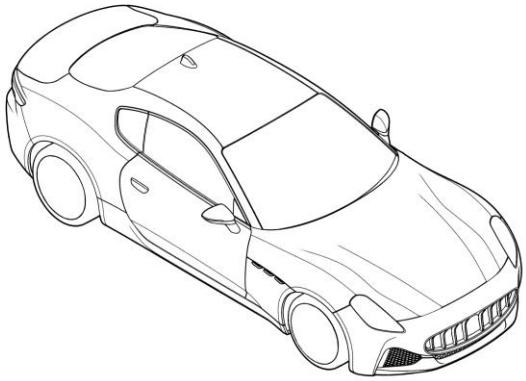

PERSPECTIVE VIEW

21: A2022/01086 22: 2022-09-16 23: 2020-05-04
43: 2023-04-14
52: Class 21 24: Part A
71: MASERATI
33: IB 31: WIPO114894 32: 2022-03-18
54: SCALE CAR MODEL
57: The design is for a scale car model in the form of a two-door sports car.

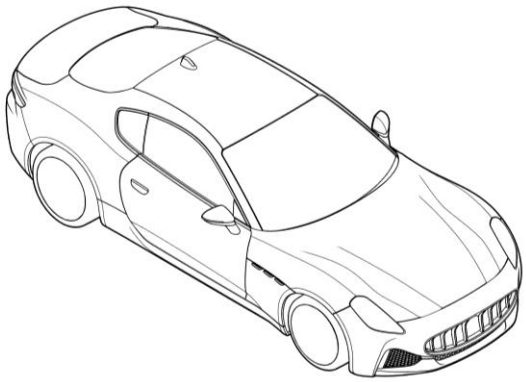

PERSPECTIVE VIEW

21: A2022/01121 22: 2022-09-19 23: 2020-05-04
43: 2023-04-13
52: Class 30 24: Part A
71: PETITE FRENCH & CO (PTY) LTD
54: A SET OF TAGS FOR ANIMALS
57: The design is applied to a set of tags for animals. The features of the design for which protection is claimed are those of the shape and/or configuration and/or ornamentation of the set of tags for animals, substantially as illustrated in the accompanying representations.

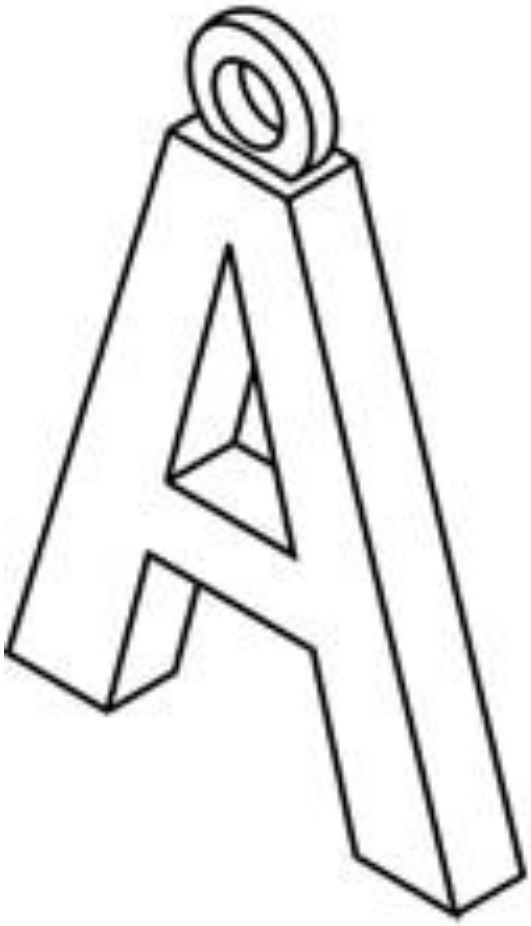

21: A2022/01142 22: 2022-09-26 23: 2020-05-04
43: 2023-04-14
52: Class 32 24: Part A
71: VECTURA FERTIN PHARMA, INC.
33: EU 31: 008928360-0001 32: 2022-04-05
54: LOGO, GRAPHIC SYMBOL, GRAPHIC DESIGN AND ORNAMENTATION
57: The design is to be applied to a logo, graphic symbol, graphic design and ornamentation. The features for which protection is claimed are those of shape and/or configuration and/or pattern and/or ornamentation, substantially as shown in the representations. The broken lines are for illustrative purposes only and form no part of the claimed design.

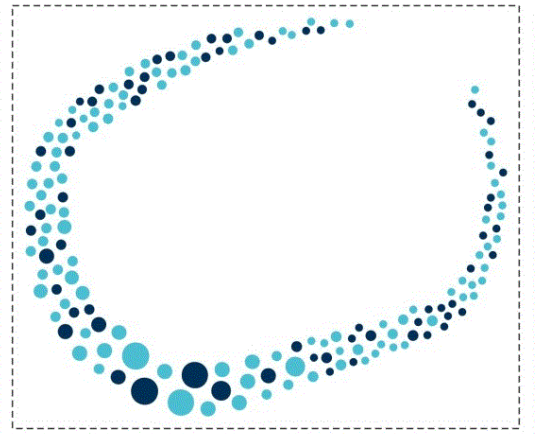

FRONT VIEW

21: A2022/01143 22: 2022-09-26 23: 2020-05-04
43: 2023-04-14
52: Class 32 24: Part A
71: VECTURA FERTIN PHARMA, INC.
33: EU 31: 008928360-0003 32: 2022-04-05
54: LOGO, GRAPHIC SYMBOL, GRAPHIC DESIGN AND ORNAMENTATION
57: The design is to be applied to a logo, graphic symbol, graphic design and ornamentation. The features for which protection is claimed are those of shape and/or configuration and/or pattern and/or ornamentation, substantially as shown in the representations. The broken lines are for illustrative purposes only and form no part of the claimed design. The design is held in brighter contrasting colour against a darker contrasting colour or background, however, the design shall not be limited to the depicted combination of colours, but in embodiments shall encompass any combination of colours and/or contrasts.

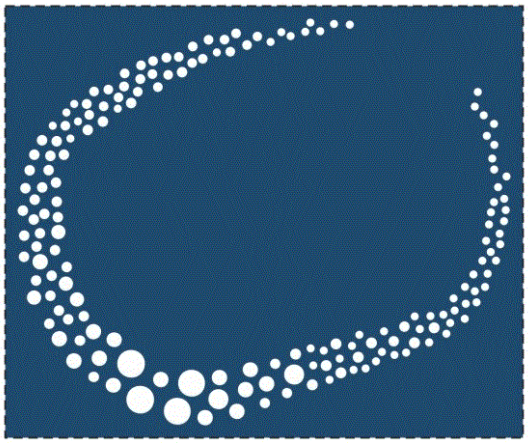

FRONT VIEW

21: A2022/01144 22: 2022-09-26 23: 2020-05-04
43: 2023-04-14
52: Class 32 24: Part A
71: VECTURA FERTIN PHARMA, INC.
33: EU 31: 008928360-0002 32: 2022-04-05
54: LOGO, GRAPHIC SYMBOL, GRAPHIC DESIGN AND ORNAMENTATION
57: The design is to be applied to a logo, graphic symbol, graphic design and ornamentation. The features for which protection is claimed are those of shape and/or configuration and/or pattern and/or ornamentation, substantially as shown in the representations. The broken lines are for illustrative purposes only and form no part of the claimed design. The design is held in darker contrasting colour against a brighter contrasting colour or background, however, the design shall not be limited to the depicted combination of colours, but in embodiments shall encompass any combination of colours and/or contrasts.

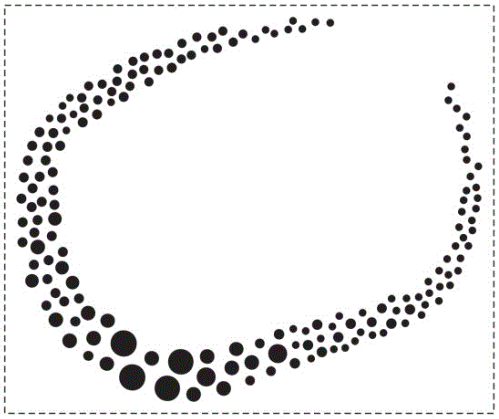

FRONT VIEW

21: A2022/01145 22: 2022-09-26 23: 2020-05-04
43: 2023-04-20
52: Class 31 24: Part A
71: Philips Domestic Appliances Holding B.V.
33: EU 31: 008921795-0001 32: 2022-03-30
54: PASTA MAKER
57: The design is for a pasta maker. The pasta maker has a body and a lid, the body having a substantially centrally located pasta dispensing opening flanked by two knobs, a lower accessories drawer, and a control panel and display on top of the body.

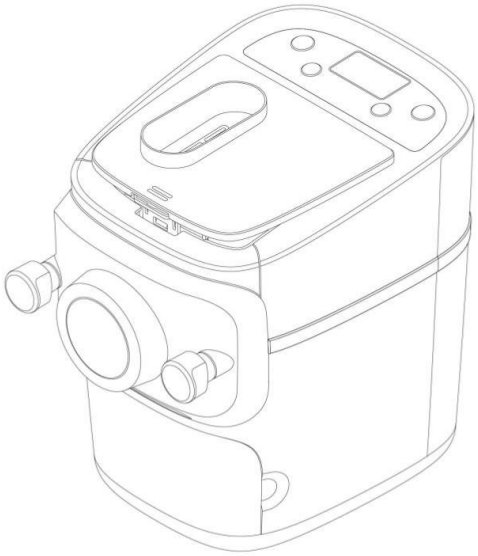

21: A2022/01146 22: 2022-09-26 23: 2020-05-04
43: 2023-04-13
52: Class 31 24: Part A
71: Philips Domestic Appliances Holding B.V.
33: EU 31: 008921795-0002 32: 2022-03-30
54: PASTA MAKER
57: The design is for a pasta maker. The pasta maker has a body and a lid, the body having a substantially centrally located pasta dispensing opening flanked by two knobs and a lower accessories drawer.

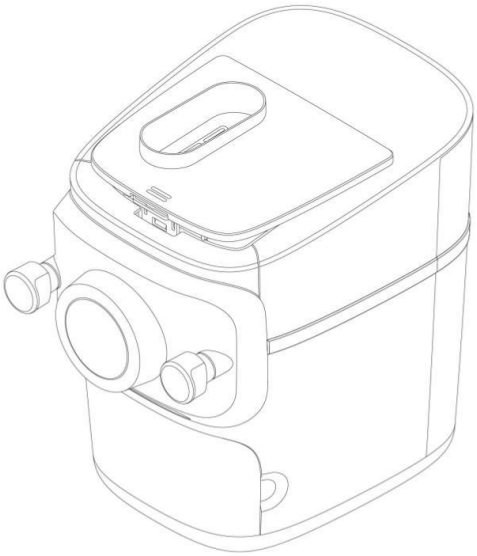

21: F2020/01461 22: 2020-11-11 23: 2020-05-04
43: 2022-12-08
52: Class 31 24: Part F
71: Damian Farry
54: FOOD DEHYDRATORS
57: The design relates to a food dehydrator. The features of the design are those of pattern, shape and/or configuration.

21: F2020/01468 22: 2020-11-11 23: 2020-05-04
43: 2022-12-08
52: Class 07 24: Part F
71: Damian Farry
54: FOOD DEHYDRATORS
57: The design relates to a food dehydrator. The features of the design are those of pattern, shape and/or configuration.

21: F2021/00726 22: 2021-06-21 23: 2020-05-04
43: 2023-03-23
52: Class Class 9. 24: Part F
71: PLASTIC INNOVATIONS (PTY) LTD
54: A Sealing Mechanism in a Cap for a Water Bottle
57: The design relates to a sealing mechanism for a cap used for a water bottle. The features of the design are those of shape and/or configuration.

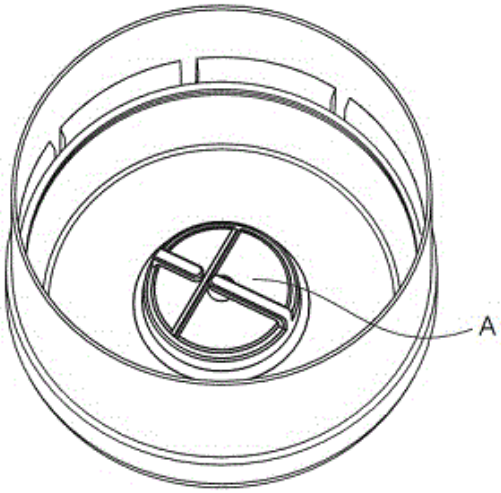

TOP PERSPECTIVE VIEW

21: F2021/01171 22: 2021-09-27 23: 2020-05-04
43: 2022-04-12
52: Class 24 24: Part F
71: Phallox (Pty) Ltd
33: ZA 31: 0 32: 2021-09-26
54: PENILE EXTENDER DEVICE
57: The design is for a single-rod penile extender with elastic straps. Traditional penile extenders have double-rods and do not use elastic straps to secure the stretched penis in the device. The device maybe used to treat penis curvature caused by Peyronie's disease and lengthen the penis with prolonged use. The features of the design for which protection is claimed include the shape and/or configuration and/or pattern of an article substantially as shown in the accompanying representation(s).

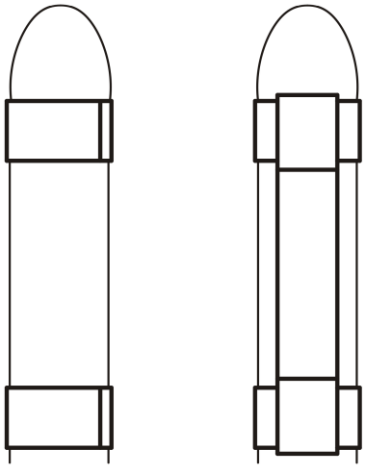

Fig. 1 Top and bottom view of the penis extender (fastened)

21: F2021/01351 22: 2021-10-29 23: 2020-05-04
43: 2023-03-20
52: Class 08 24: Part F
71: RA ASSET TRUST
54: CHAIN LINKS
57: The features of the design for which protection is claimed reside in the shape and/or configuration and/or pattern of a chain link substantially as illustrated in Figures 1 to 6 of the accompanying representations, irrespective of colour.

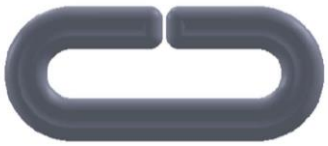

Figure 1
Side view of chain link

21: F2021/01353 22: 2021-10-29 23: 2020-05-04
43: 2023-03-20
52: Class 25 24: Part F
71: RA ASSET TRUST
54: BARRIER ARRANGEMENTS
57: The features of the design for which protection is claimed reside in the shape and/or configuration and/or pattern of a barrier arrangement substantially as illustrated in the accompanying representations.

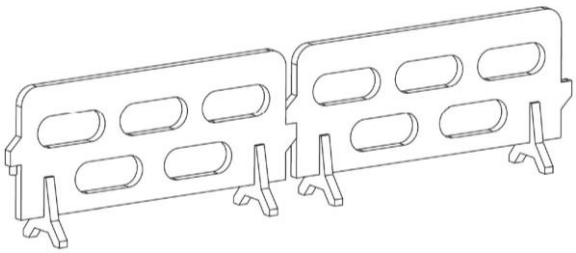

Figure 12
Perspective view of barrier arrangement

21: F2021/01355 22: 2021-10-29 23: 2020-05-04
43: 2023-03-20
52: Class 25 24: Part F
71: RA ASSET TRUST
54: BARRIERS
57: The features of the design for which protection is claimed reside in the shape and/or configuration and/or pattern of a barrier substantially as illustrated in the accompanying representations.

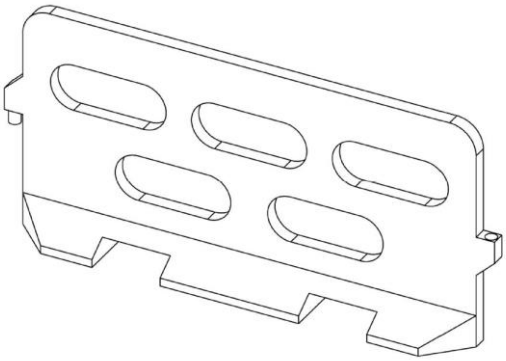

Figure 1
Perspective view of barrier

21: F2022/00374 22: 2022-04-07 23: 2020-05-04
43: 2021-10-07
52: Class 22 24: Part F
71: Skell Inc.
33: US 31: 29/810,627 32: 2021-10-07
54: BUG KILLING PISTOLS
57: The design is for a bug killing pistol having a rearwardly inclined handle connected to a frame, extending to a barrel with a muzzle. A front of the handle defines gripping recesses. The frame includes a curved hammer, a rear sight, and an oval trigger guard within which a curved trigger is positioned. A curved crane is positioned at a bottom of the barrel. A top of the barrel includes a front sight.

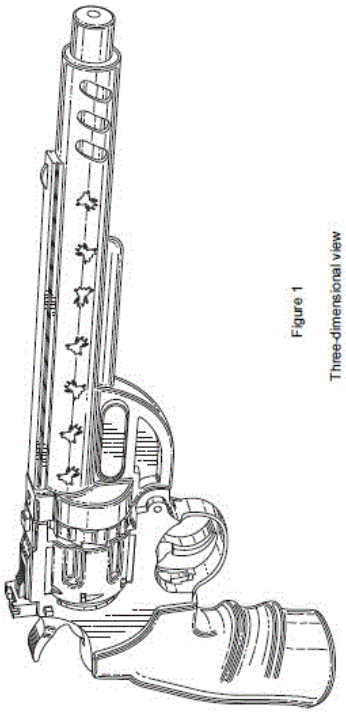

Figure 1
Three-dimensional view

21: F2022/00624 22: 2022-06-02 23: 2020-05-04
43: 2023-05-12
52: Class 24 24: Part F
71: HOLLIDAY, Daniel Mark
54: ACCESSORY FOR AN INTRAVENOUS INFUSION SET
57: The design relates to an accessory A for an intravenous infusion set. The features of the design for which protection is claimed reside in the shape and/or configuration of the accessory A, substantially as shown in the accompanying representations.

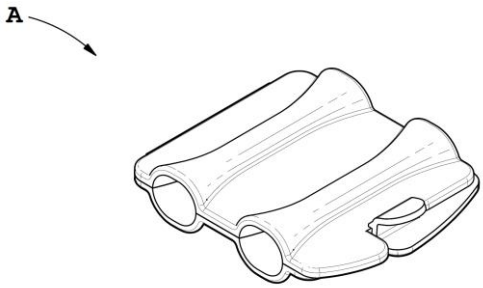

21: F2022/00646 22: 2022-06-10 23: 2020-05-04
43: 2023-03-03
52: Class 15 24: Part F
71: DAYN AMADE INVENTIONS LTD
33: GB 31: 6203645 32: 2022-04-20
54: DRY FREEZER INTERACTIVE TRAILER

57: The design is applied to a dry freezer interactive trailer. The features of the design for which protection is claimed are those of the shape and/or configuration and/or pattern of the dry freezer interactive trailer, substantially as illustrated in the accompanying representation. Features shown in broken lines do not form part of the design and are disclaimed.

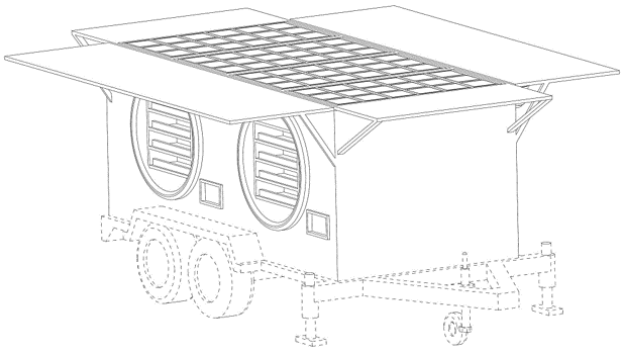

21: F2022/00752 22: 2022-06-30 23: 2020-05-04
43: 2023-05-03
52: Class 13 24: Part F
71: PIMMS GROUP (PTY) LTD
54: CONNECT TERMINAL FRAME
57: The features of the design for which protection is claimed include the shape and/or configuration of the CONNECT TERMINAL FRAME substantially as illustrated in the accompanying representations. Features shown in broken lines do not form part of the design and are disclaimed.

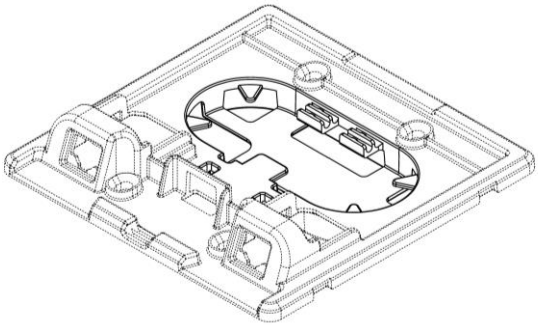

21: F2022/00783 22: 2022-06-30 23: 2020-05-04
43: 2023-02-07
52: Class 13 24: Part F
71: PIMMS GROUP (PTY) LTD
54: CONNECT TERMINAL FACIA
57: The features of the design for which protection is claimed include the shape and/or configuration of the CONNECT TERMINAL FACIA substantially as illustrated in the accompanying representations

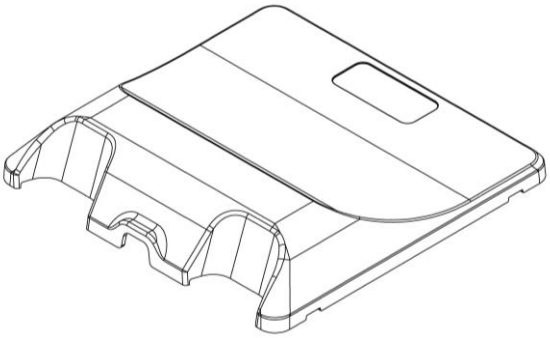

21: F2022/00808 22: 2022-07-14 23: 2020-05-04
43: 2023-05-03
52: Class 05 24: Part F
71: Duvibuddy (PTY) LTD
54: SHEET FOR A BED
57: The features of the design for which novelty is claimed are the shape and / or configuration and / or pattern of a fitted sheet having at least one zip, wherein zips in position B, C and D are disclaimed.

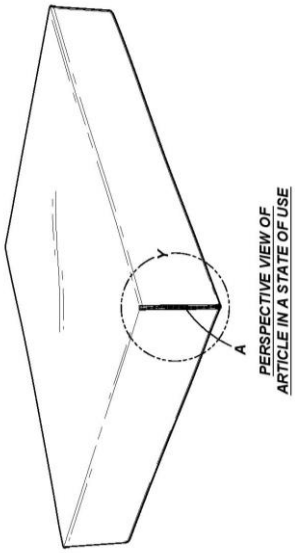

21: F2022/00873 22: 2022-07-29 23: 2020-05-04
43: 2022-07-20
52: Class 28 24: Part F
71: Lashify, Inc.
33: US 31: 29/846,967 32: 2022-07-20
54: LASH EXTENSION SEPARATING APPARATUSES
57: The design relates to a lash extension separating apparatus for applying artificial eyelash extensions and separating artificial hairs from artificial eyelash extensions. The apparatus

resembles undulating tweezers and includes a pair of opposing arms that are joined at proximal ends thereof. Each arm includes a curved section at a distal end thereof. The curved section at the distal end of one arm includes longitudinally spaced apart slots and the curved section of the distal end of the opposite arm includes complementary spaced apart teeth elements facing the slots. Each arm includes an enlarged central curved section extending between the distal and proximal ends.

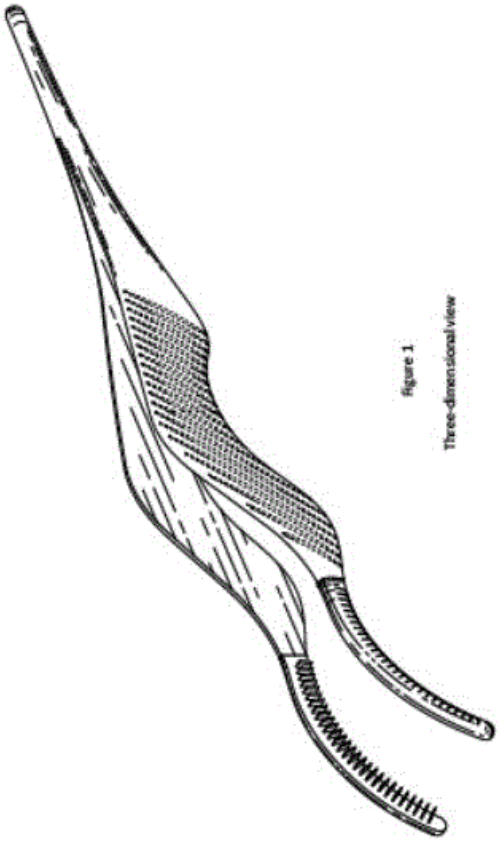

21: F2022/00874 22: 2022-07-29 23: 2020-05-04
43: 2022-07-20
52: Class 28 24: Part F
71: Lashify, Inc.
33: US 31: 29/846,967 32: 2022-07-20

54: LASH EXTENSION SEPARATING APPARATUSES

57: The design relates to a lash extension separating apparatus for applying artificial eyelash extensions and separating artificial hairs from artificial eyelash extensions. The apparatus includes a pair of opposing curved arm sections. One of the curved arm sections includes longitudinally spaced apart slots and the other curved arm section includes complementary spaced apart teeth elements facing the slots.

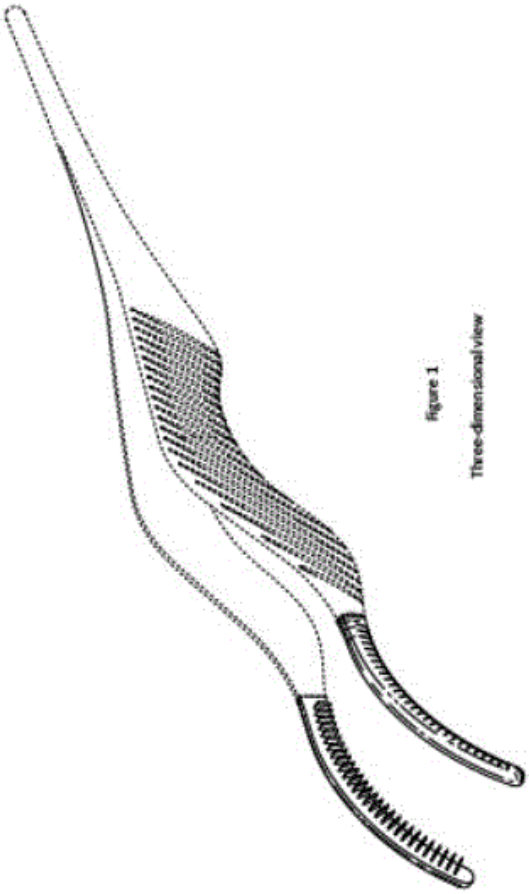

21: F2022/00875 22: 2022-07-29 23: 2020-05-04
43: 2022-07-20
52: Class 28 24: Part F
71: Lashify, Inc.
33: US 31: 29/846,967 32: 2022-07-20

54: LASH EXTENSION SEPARATING APPARATUSES

57: The design relates to a lash extension separating apparatus for applying artificial eyelash extensions and separating artificial hairs from artificial eyelash extensions. The apparatus includes a pair of opposing curved arm sections. One of the curved arm sections includes longitudinally spaced apart slots at a central portion thereof, and the other curved arm section includes complementary spaced apart teeth elements facing and arranged in register with the slots.

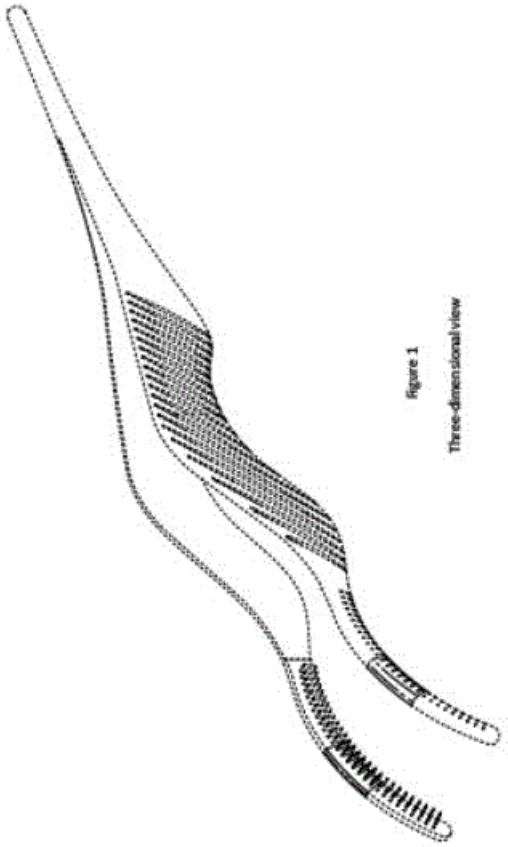

21: F2022/00876 22: 2022-07-29 23: 2020-05-04
43: 2022-07-20
52: Class 28 24: Part F
71: Lashify, Inc.
33: US 31: 29/846,967 32: 2022-07-20
54: LASH EXTENSION SEPARATING APPARATUSES
57: The design relates to a lash extension separating apparatus for applying artificial eyelash extensions and separating artificial hairs from artificial eyelash extensions. The apparatus includes a pair of opposing arms that are joined at proximal ends thereof. Each arm includes a curved section at a distal end thereof. The curved section at the distal end of one arm includes longitudinally spaced apart slots and the curved section of the distal end of the opposite arm includes complementary spaced apart teeth elements facing and in register with the slots. Each arm includes an enlarged central curved section extending between the distal and proximal ends.

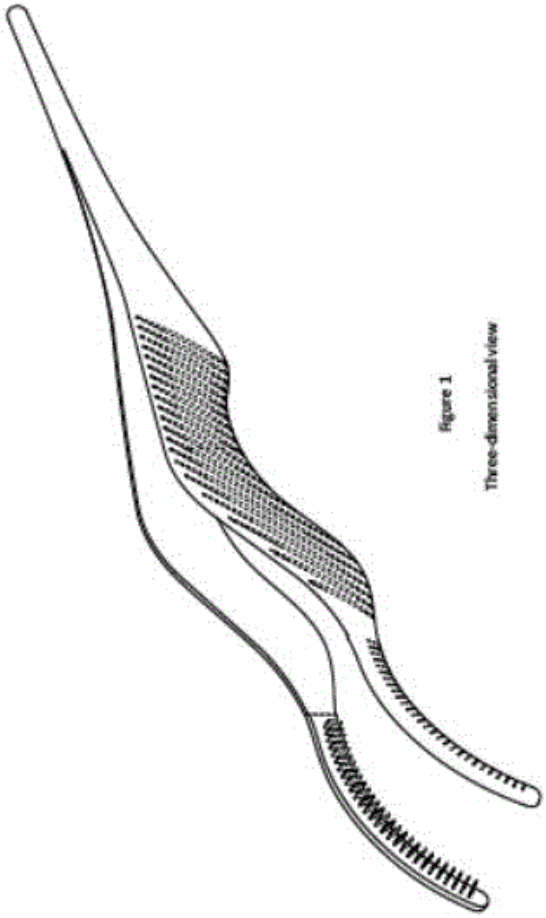

21: F2022/00978 22: 2022-08-22 23: 2020-05-04
43: 2022-07-20
52: Class 28 24: Part F
71: Lashify, Inc.
33: US 31: 29/846,969 32: 2022-07-20
54: LASH APPARATUSES
57: The design relates to a lash apparatus that is temperature-adjustable for natural eyelashes and artificial eyelash extensions. The apparatus includes an enlarged, substantially crescent/banana-shaped handle and a pair of opposing arcuate arms coupled to the handle. The arms diverge away from the handle. A convex shaped formation is provided on either side of the handle at a first end thereof near a proximal end of the arms. A circular formation is provided on either side of the handle near a second end thereof.

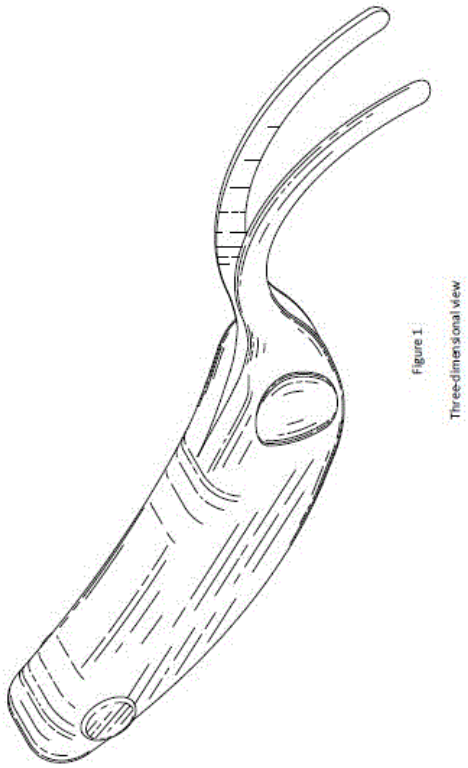

21: F2022/00979 22: 2022-08-22 23: 2020-05-04
43: 2022-07-20
52: Class 28 24: Part F
71: Lashify, Inc.
33: US 31: 29/846,969 32: 2022-07-20
54: LASH APPARATUSES
57: The design relates to a lash apparatus that is temperature-adjustable for natural eyelashes and artificial eyelash extensions. The apparatus includes an enlarged, substantially crescent/banana-shaped handle and a pair of opposing, long arcuate arms coupled to the handle. The arms diverge away from the handle.

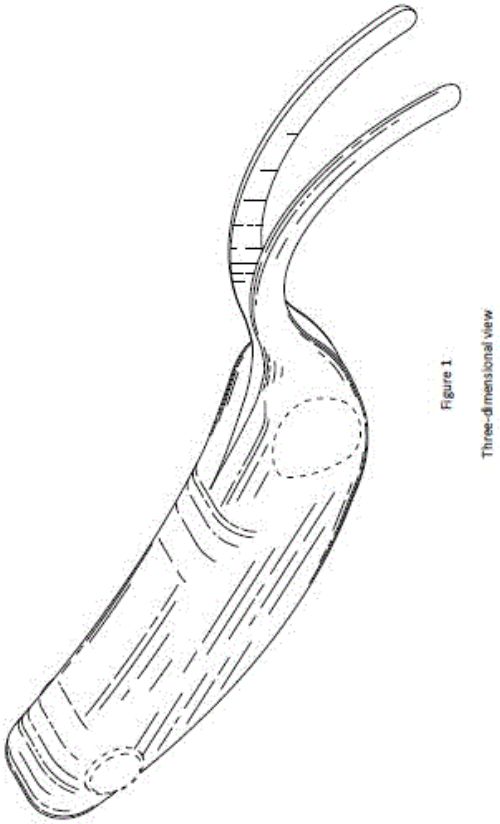

21: F2022/00980 22: 2022-08-22 23: 2020-05-04
43: 2022-07-20
52: Class 28 24: Part F
71: Lashify, Inc.
33: US 31: 29/846,969 32: 2022-07-20
54: LASH APPARATUSES
57: The design relates to a lash apparatus that is temperature-adjustable for natural eyelashes and artificial eyelash extensions. The apparatus includes a pair of opposing, long arcuate arms coupled to a middle section of a portion of an enlarged handle. The arms diverge away from the handle.

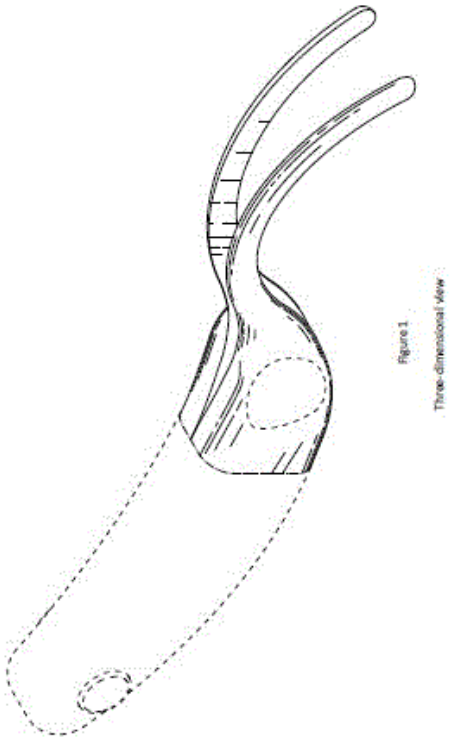

21: F2022/00999 22: 2022-08-26 23: 2020-05-04
43: 2023-03-09
52: Class 15 24: Part F
71: ROVIC AND LEERS (PTY) LTD
54: ADJUSTING RACK
57: The design is applied to an adjusting rack. The features of the design for which protection is claimed are those of the shape and/or configuration and/or pattern of the adjusting rack, substantially as illustrated in the accompanying representations of Figures 1 to 8.

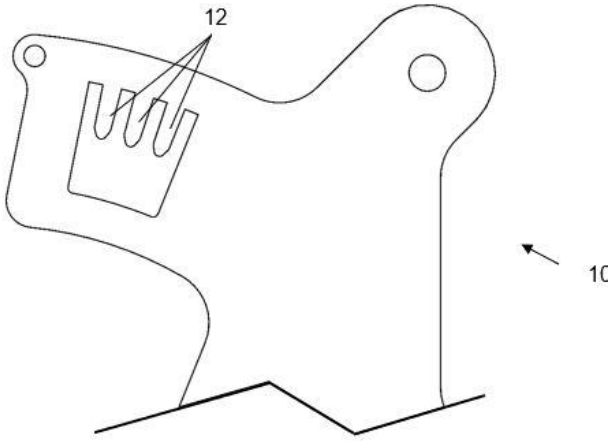

FIGURE 1
FRONT VIEW

21: F2022/01003 22: 2022-08-26 23: 2020-05-04
43: 2023-03-03
52: Class 15 24: Part F
71: ROVIC AND LEERS (PTY) LTD
54: SCRAPER ASSEMBLY
57: The design is applied to a scraper assembly. The features of the design for which protection is claimed are those of the shape and/or configuration and/or pattern of the scraper assembly, substantially as illustrated in the accompanying representations of Figures 1 to 10.

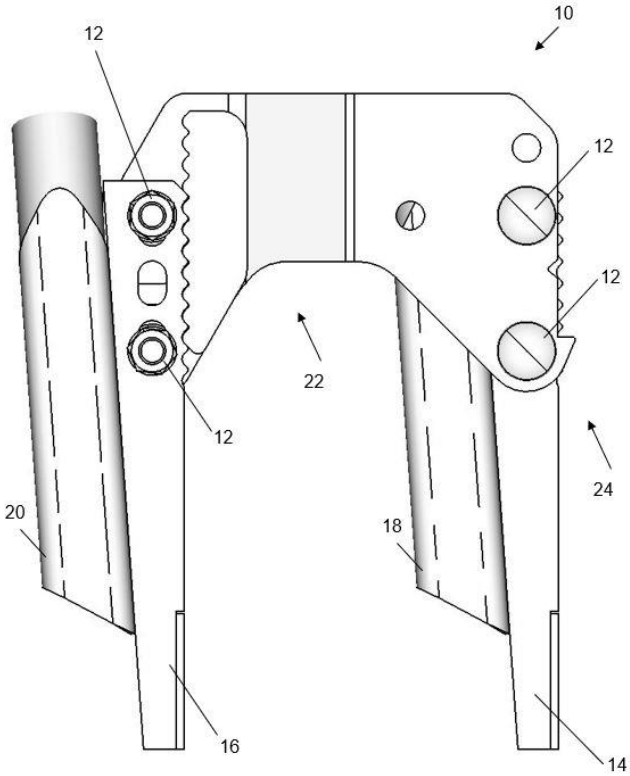

FIGURE 1
FRONT VIEW

21: F2022/01005 22: 2022-08-26 23: 2020-05-04
43: 2023-03-03
52: Class 15 24: Part F
71: ROVIC AND LEERS (PTY) LTD
54: PLANTER
57: The design is applied to a planter. The features of the design for which protection is claimed are those of the shape and/or configuration and/or pattern of the planter, substantially as illustrated in the accompanying representations. Features shown in broken lines do not form part of the design and are disclaimed.

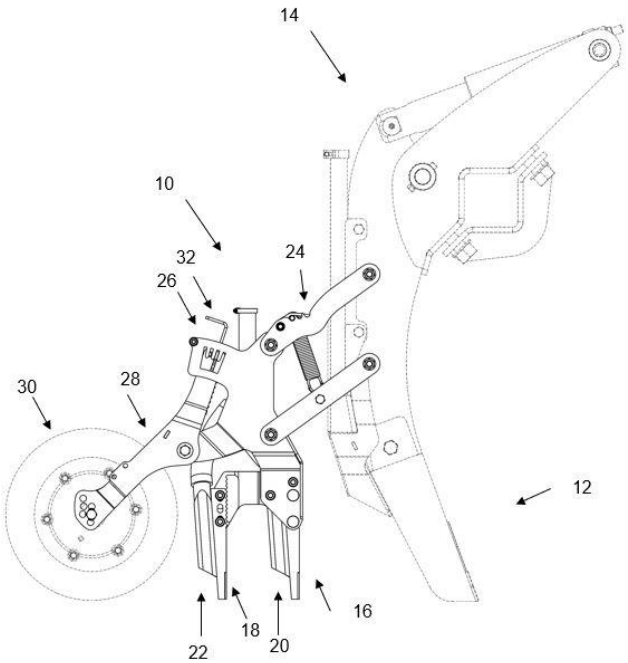

FIGURE 1
FRONT VIEW

21: F2022/01010 22: 2022-08-29 23: 2020-05-04
43: 2022-08-29
52: Class 3 24: Part F
71: JONE 7 (PTY) LTD.
54: SUITCASES
57: The design relates to a suitcase, in particular a two-wheeled suitcase with a telescopically extendable handle toward a rear. The telescopic handle has an oval handgrip. The suitcase has a rigid body which is rectangular in cross-section and has generally rounded edges and corners. The two wheels are disposed laterally toward the rear of the body in curved recesses designed to accommodate the wheels. The body comprises a lower base having longitudinally extending ribs over sidewalls of the base and a lid or cover which is hingedly connected over a top of the base. The hinge is toward a front of the body. The suitcase has a second, generally U-shaped carry handle mounted to opposing upper sides of the base. A plurality of diamond-shaped formations, decreasing in size mediolaterally, are provided on a front upper portion of the lid.

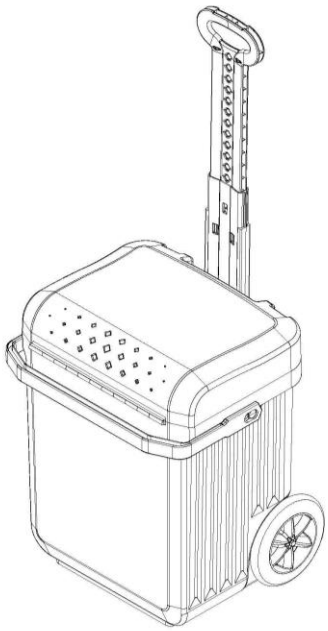

21: F2022/01040 22: 2022-09-02 23: 2020-05-04
43: 2023-04-14
52: Class 09 24: Part F
71: APL CARTONS (PTY) LTD
54: CONTAINER
57: The design is for a rectangular, stackable container with a triangular pillar in each corner that is anchored at its bottom and with stacking lugs received in apertures of top flaps.

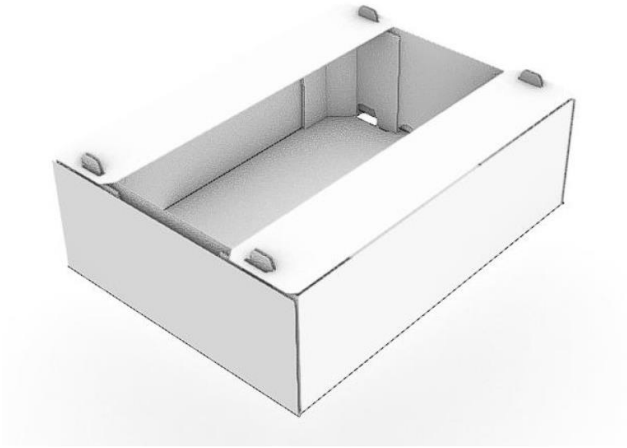

21: F2022/01041 22: 2022-09-02 23: 2020-05-04
43: 2023-04-14
52: Class 09 24: Part F
71: APL CARTONS (PTY) LTD
54: CONTAINER
57: The design is for a rectangular container that is suitable for use as a bulk bin for fresh produce, with

two inwardly folded straps in each corner within which an elongate support can be received.

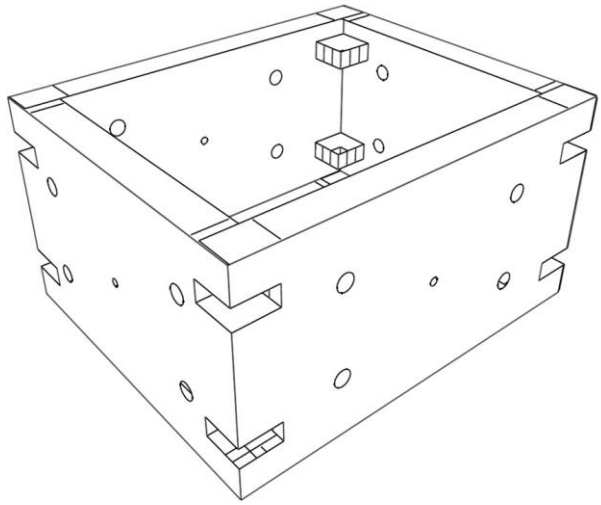

21: F2022/01069 22: 2022-09-09 23: 2020-05-04
43: 2023-04-14
52: Class 12 24: Part F
71: Loadtech Load Cells (Pty) Ltd
54: WHEEL LOCKING DEVICE
57: The novelty of this design resides in the shape and configuration of a WHEEL LOCKING DEVICE substantially as shown in the drawings. The features shown in broken lines are for illustration purposes only, do not form part of the design to be protected and are disclaimed.

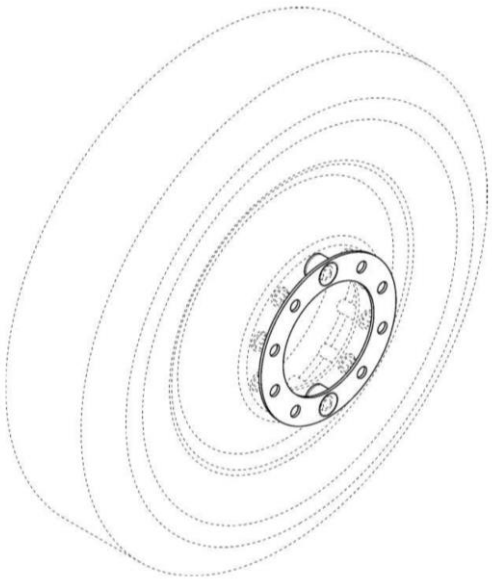

21: F2022/01080 22: 2022-09-15 23: 2020-05-04
43: 2023-04-13
52: Class 25 24: Part F
71: Botha Family Trust
54: BEAMS
57: The design is for a beam, in particular for a beam used in the construction of concrete slabs. The beam includes an elongated body of sheet material, the body being profiled to define a longitudinal trough. The longitudinal trough comprises of a substantially flat planar base and two inwardly slanted webs projecting upwardly from the associated base. The first web includes a generally L-shaped lip projecting from the upper end of the web. The first bend of the L-shaped lip is laterally outwards away from the trough followed by a second bend in a downwards direction towards the base of the trough. The second web has a flat lip projecting laterally outwards away from the trough.

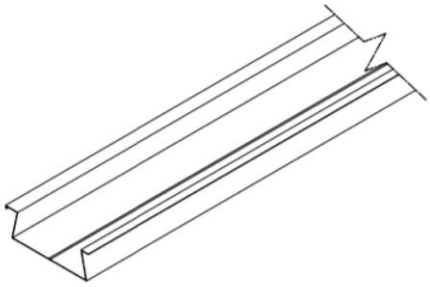

Three-dimensional view of a beam

21: F2022/01081 22: 2022-09-15 23: 2020-05-04
43: 2023-04-13
52: Class 25 24: Part F
71: Botha Family Trust
54: STIFFENERS
57: The design is for a stiffener, in particular for a stiffener used in the construction of concrete slabs. The stiffener includes an elongated bar, the bar being profiled to define a U-shape. The stiffener comprises of a substantially flat planar crown and two outwardly slanted webs projecting downwardly from the associated crown.

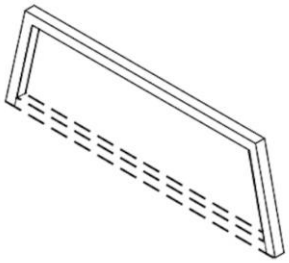

Three-dimensional view of a stiffener

21: F2022/01082 22: 2022-09-15 23: 2020-05-04
43: 2023-04-13
52: Class 25 24: Part F
71: Botha Family Trust
54: VOID FORMERS
57: The design is for a void former, in particular for a void former used in the construction of concrete slabs. The void former includes an elongated body of sheet material, the body being profiled to define a longitudinal ridge which resembles a hat-profile. The ridge comprises a generally flat crown and two flat webs slanting downwardly and away from the respective side edges of the crown. To provide the void with rigidity, multiple relatively low, equally spaced corrugations protrude upwards from the generally flat crown. Each web has a flat flange projecting laterally outwards away from the ridge.

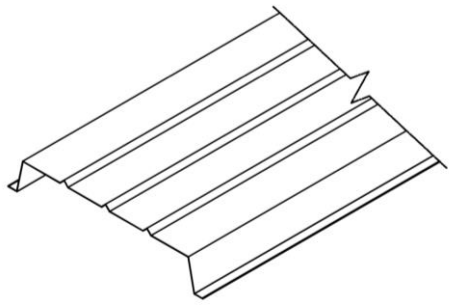

Three-dimensional view of a void former

21: F2022/01108 22: 2022-09-19 23: 2020-05-04
43: 2023-04-20
52: Class 09 24: Part F
71: ALPLA Werke Alwin Lehner GmbH & Co. KG
33: CH 31: 146770 32: 2022-05-06
54: BOTTLE
57: The features of the design for which protection is claimed include the shape and/or configuration and/or pattern of an article substantially as shown in the accompanying representation(s).

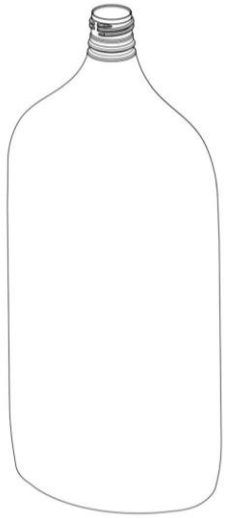

21: F2022/01130 22: 2022-09-23 23: 2020-05-04
43: 2023-04-20
52: Class 12 24: Part F
71: COMPAGNIE GENERALE DES ETABLISSEMENTS MICHELIN
33: US 31: 29/832,264 32: 2022-03-25
54: TYRE THREAD
57: The design is to be applied to tyre thread. The features for which protection is claimed are those of shape and/or configuration and/or pattern, substantially as shown in the representations. The broken lines are for illustrative purposes only and form no part of the claimed design.

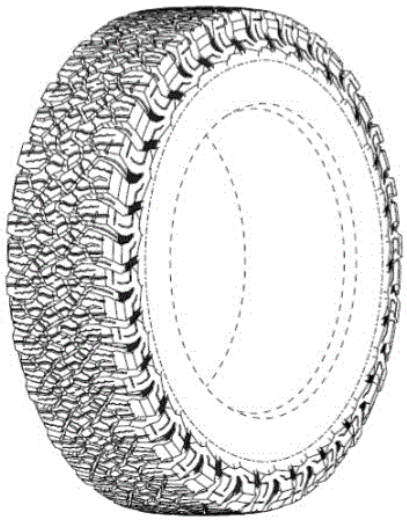

FRONT LEFT PERSPECTIVE VIEW

21: F2022/01131 22: 2022-09-23 23: 2020-05-04
43: 2023-04-20

52: Class 12 24: Part F
71: COMPAGNIE GENERALE DES ETABLISSEMENTS MICHELIN
33: US 31: 29/832,265 32: 2022-03-25
54: TYRE THREAD
57: The design is to be applied to tyre thread. The features for which protection is claimed are those of shape and/or configuration and/or pattern, substantially as shown in the representations. The broken lines are for illustrative purposes only and form no part of the claimed design.

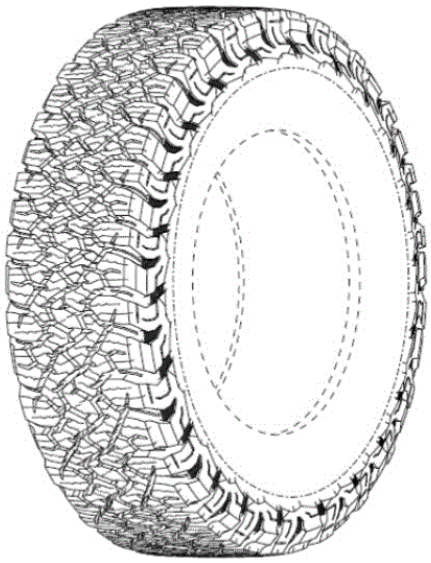

FRONT LEFT PERSPECTIVE VIEW

21: F2022/01133 22: 2022-09-23 23: 2020-05-04
43: 2023-04-13
52: Class 14 24: Part F
71: Reflex Instruments Asia Pacific Pty Ltd
33: AU 31: 202211887 32: 2022-03-31
54: LOCATORS FOR A SURVEY APPARATUS
57: The design is for a locator for a survey apparatus, in particular for a locator element. The locator element includes an elongated body with two identical interlocking ends, connected by a centre section. The cross-sectional profile of the body, viewed along the longitudinal axis, is predominantly semi-circular. An identical locator element can be interlocked onto the locator element to form a generally tubular locator. The shape and configuration of the centre section that connects the two opposing interlocking ends is disclaimed. The interlocking ends include tangentially orientated interlocking clips on one of the longitudinal sides of the body which protrude upwardly away from the body. The interlocking clips include outwardly facing lips for interlocking purposes. The opposite longitudinal side includes predominantly rectangular apertures at each interlocking end into which the clip of an identical locator element can interlock to form the generally tubular locator.

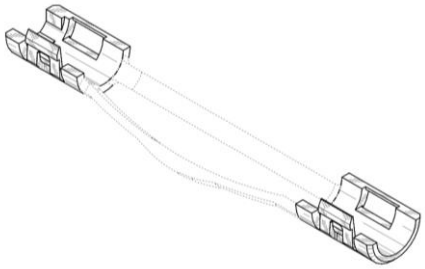

Three-dimensional view of a locator element

21: F2022/01134 22: 2022-09-23 23: 2020-05-04
43: 2023-04-13
52: Class 14 24: Part F
71: Reflex Instruments Asia Pacific Pty Ltd
33: AU 31: 202211887 32: 2022-03-31
54: LOCATORS FOR A SURVEY APPARATUS
57: The design is for a locator for a survey apparatus, in particular for a locator element. The locator element includes an elongated body with two identical interlocking ends, connected by a centre section. The cross-sectional profile of the body, viewed along the longitudinal axis, is predominantly semi-circular. An identical locator element can be interlocked onto the locator element to form a generally tubular locator. The centre section that connects the two opposing interlocking ends consists of two, generally slender, outwardly curved ribs. The interlocking ends include tangentially orientated interlocking clips on one of the longitudinal sides of the body which protrude upwardly away from the body. The interlocking clips include outwardly facing lips for interlocking purposes. The opposite longitudinal side includes predominantly rectangular apertures at each interlocking end into which the clip of an identical locator element can interlock to form the generally tubular locator.

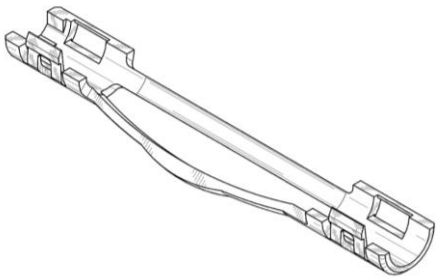

Three-dimensional view of a locator element

21: F2022/01149 22: 2022-09-28 23: 2020-05-04
43: 2023-05-03
52: Class 02 24: Part F
71: Duvibuddy (PTY) LTD
54: HEADWARE
57: The features of the design for which novelty is claimed are the shape and / or configuration of headware as shown in the accompanying representations.

21: F2022/01152 22: 2022-09-29 23: 2020-05-04
43: 2023-04-20
52: Class 19 24: Part F
71: Maria Magdalena Phillipa Oosthuizen
54: SCHOOL TRACKSUIT
57: Paper pattern to cut out school tracksuit. Tracksuit is two colors with a V-shape stripe from the neck into the arms

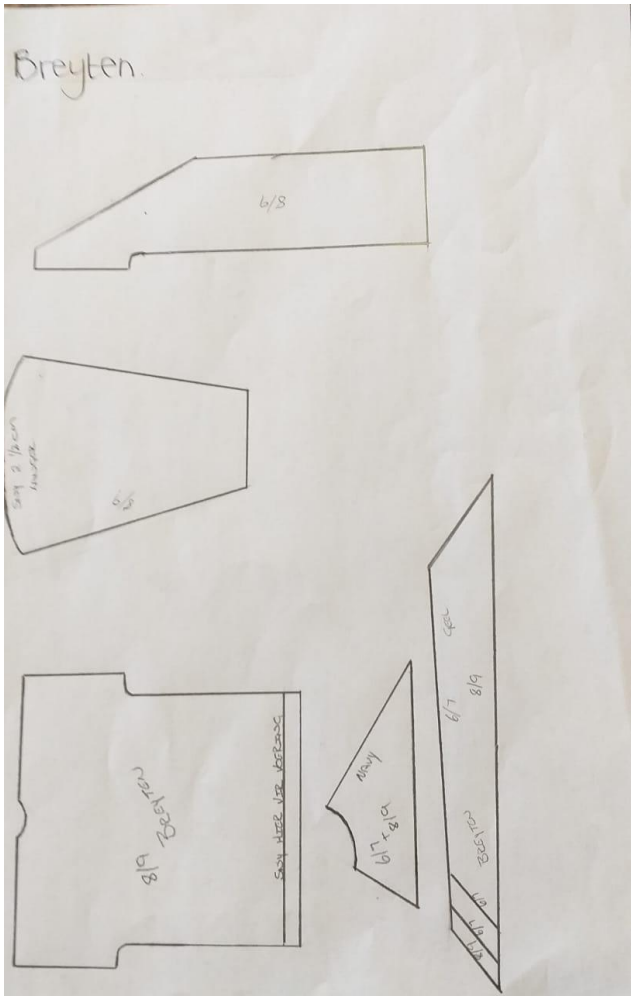

21: F2023/00174 22: 2023-02-09 23: 2020-05-04
43: 2023-04-04
52: Class 12 24: Part F
71: Izzy Izzy Scooters (Pty) Ltd
54: RAMP
57: The design relates to a Ramp. The features of the design are those of shape and/or pattern and/or configuration.

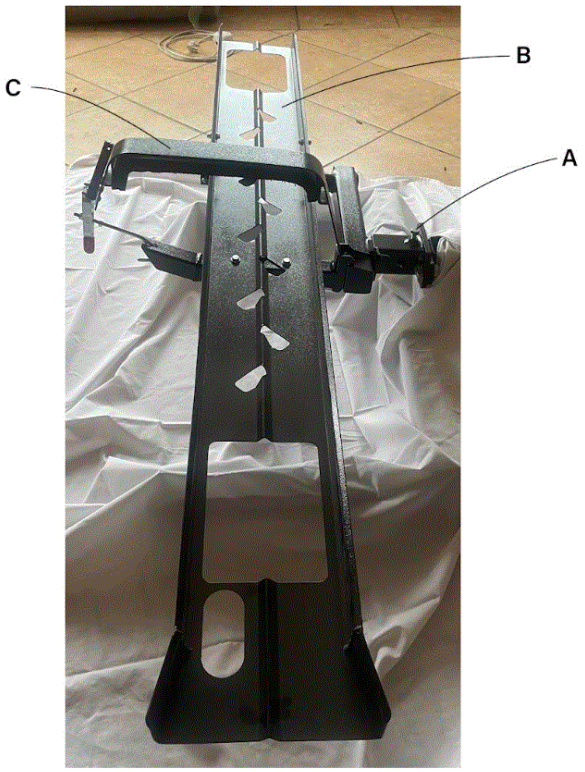

21: F2023/00197 22: 2023-02-14 23: 2020-05-04
43: 2023-04-04
52: Class 29 24: Part F
71: Aloma Annelene Grobler
54: BUGGY WHIP
57: The design relates to a Buggy Whip. The features of the design are those of shape and/or pattern and/or configuration.

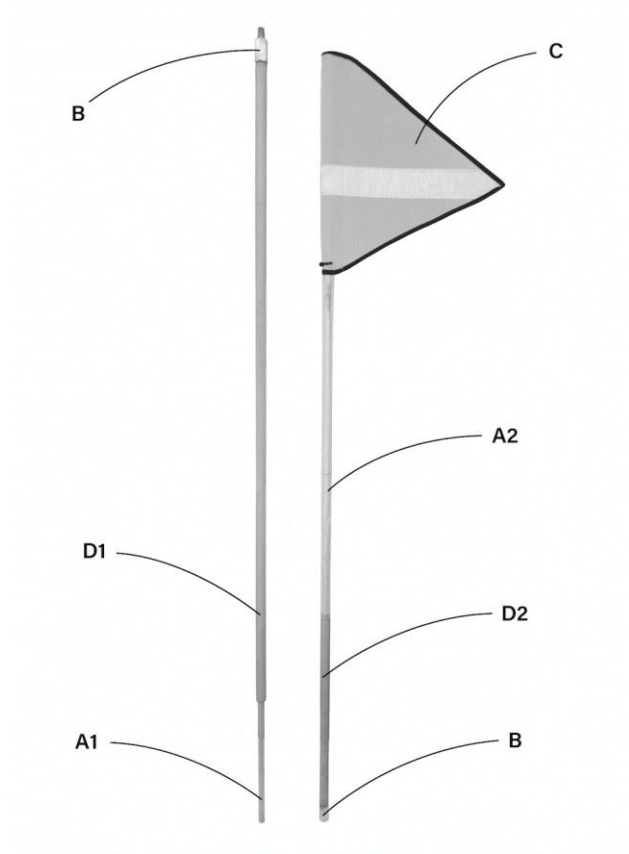

HYPOTHECATIONS

No records available

JUDGMENTS

No records available

OFFICE PRACTISE NOTICES

No records available

4. COPYRIGHT

COPYRIGHT IN CINEMATOGRAPH FILMS

NOTICES OF ACCEPTANCE

(Applications filed in terms of Act No. 62 of 1977)

Any person, who has grounds for objection to the registration of the copyright in any of the following cinematographs films, may within the prescribed time, lodge Notice of Opposition on Form RF 5 contained in the Second Schedule to the Registration of Copyright in Cinematograph Films Regulations, 1980. The prescribed time is one month after the date of advertisement. This period may on application be extended by the Registrar.

The numerical denote the following: **(21)** Official application number. **(22)** Date of application. **(43)** Date of acceptance. **(24)** Date(s) and place(s) at which cinematograph films was made. **(25)** Date and place of first publication. **(71)** Name (s) of all applicant (s). **(75)** Name of author. **(76)** Name of producer **(77)** Name of director **(54)** Title of cinematograph film. **(78)** Name(s) of principal players or narrator. **(26)** Places at which cinematograph film may be viewed and conditions. **(55)** Specimen lodged/Not lodged. **(56)** Preview requested/Not requested. **(57)** Abstract (Storyline). **(58)** Category.

No records available

HYPOTHECATIONS

No records available

JUDGMENTS

No records available

OFFICE PRACTISE NOTICES

No records available

5. CORRECTION NOTICES

TRADE MARK CORRECTION NOTICES

The following trade marks were advertised in the **April 2023 journal** with the name of applicant been duplicated and the publications should have appeared as the following below, but the publication date will remain the **26/04/2023.**

2022/16616 in Class 09: Hardware and software for processing credit card, debit card, and gift card transactions; downloadable software for enabling the transfer of financial instruments between users; downloadable software to enable transactions of value to be requested from or sent to others, namely, financial transactions, discounts, rewards, and loyalty benefits; computer hardware and peripherals for payment processing and transfer of financial instruments; stands adapted for tablet computers; magnetically encoded debit cards and payment cards; downloadable software for providing users with discounts on select third-party consumer products and services; downloadable software featuring a marketplace of third-party discounts and referrals; downloadable application programming interface (API) software; downloadable software for the investment of funds; downloadable software in the nature of a mobile application for brokerage and trading of investments, securities, stocks, bonds, capital investments, commodities and equities; downloadable software, namely, software and software development tools and applications for designing, creating, hosting, customizing, modifying, maintaining and updating websites and web pages for others; downloadable software for downloading, accessing, playing, organizing and streaming audio, audio-video and interactive media content. in the name of BLOCK, INC., a Delaware corporation 1955 Broadway, Suite 600, Oakland, California 94612, United States of America. Address for service: VON SEIDELS, 4 East Park, Central Park on Park Lane, Century City, 7441, SOUTH AFRICA

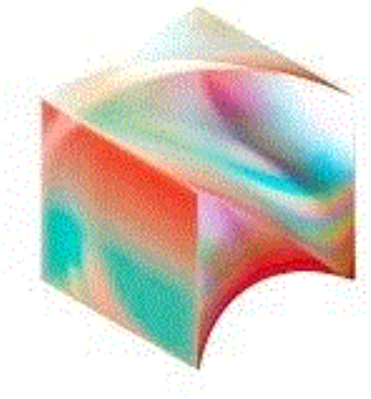

Associated with: 2022/16617; 2022/16615; 2022/16615
Priority is claimed by virtue of trade mark no: 85094 filed in JM on 2021-11-30
FILED: 2022-05-30

2022/16617 in Class 35: Holding company services, namely, business administration services for subsidiaries and affiliates which provide tools and resources for economic empowerment; holding company services, namely, providing business administration, business promotion, and business consulting services for subsidiaries; holding company services, namely, identifying strategic alliances for affiliates. in the name of BLOCK, INC., a Delaware corporation 1955 Broadway, Suite 600, Oakland, California 94612, United States of America. Address for service: VON SEIDELS, 4 East Park, Central Park on Park Lane, Century City, 7441, SOUTH AFRICA

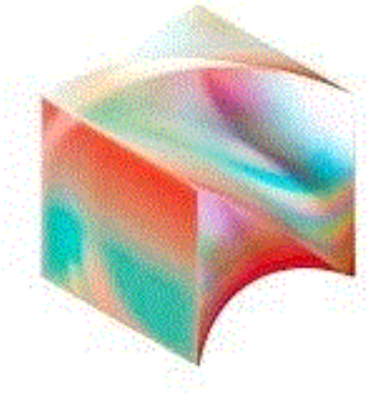

Associated with: 2022/16618
Priority is claimed by virtue of trade mark no: 85094 filed in JM on 2021-11-30
FILED: 2022-05-30

2022/16618 in Class 36: Holding company services, namely, financial reporting and financial advising to subsidiaries and affiliated companies; holding company services, namely, provision of investment capital, development, ownership, and operation relative to subsidiaries and affiliates; holding company services, namely, acquisition, management, and transfer of company stakes as well as the intermediation of equity capital financing of companies, namely, asset acquisition, consultation, development and management services; business administration and management, namely, controlling policies and management of the other companies. in the name of BLOCK, INC., a Delaware corporation 1955 Broadway, Suite 600, Oakland, California 94612, United States of America. Address for service: VON SEIDELS, 4 East Park, Central Park on Park Lane, Century City, 7441, SOUTH AFRICA

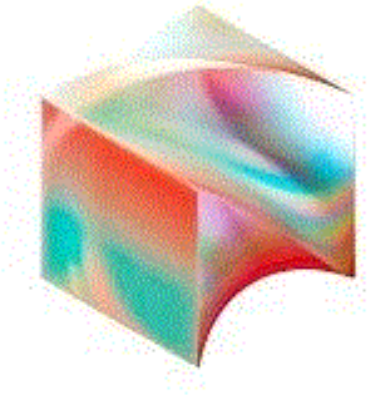

Associated with: 2022/16619
Priority is claimed by virtue of trade mark no: 85094 filed in JM on 2021-11-30
FILED: 2022-05-30

2022/16619 in Class 42: Providing temporary use of non-downloadable software for making, processing and authenticating financial and payment transactions and refunds over electronic mediums; providing temporary use of non-downloadable software for providing users with discounts on select third-party consumer products and services; providing temporary use of non-downloadable software featuring a marketplace of third-party discounts and referrals; user authentication services using single sign-on technology for online software applications; user authentication services using technology for e-commerce transactions; non-downloadable computer software for authentication of users; non-downloadable computer software for management of user identification; design and development of hardware and software; providing temporary use of web-based applications; technical support services relating to computer software and applications; application service provider featuring application

programming interface (API) software; providing temporary use of non-downloadable software for the investment of funds; providing temporary use of non-downloadable software for designing, creating, hosting, customizing, modifying, maintaining and updating websites and web pages for others; computer services, namely, cloud hosting provider services; providing temporary use of non-downloadable software for downloading, accessing, playing, organizing and streaming audio, audio-video and interactive media content. in the name of BLOCK, INC., a Delaware corporation 1955 Broadway, Suite 600, Oakland, California 94612, United States of America. Address for service: VON SEIDELS, 4 East Park, Central Park on Park Lane, Century City, 7441, SOUTH AFRICA

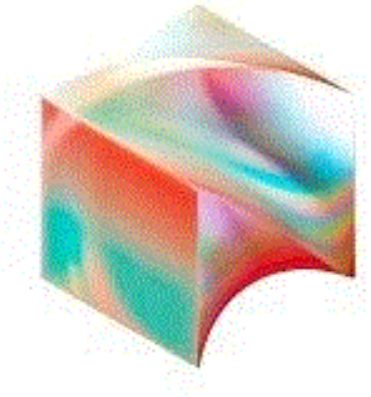

Associated with: 2022/16616
Priority is claimed by virtue of trade mark no: 85094 filed in JM on 2021-11-30
FILED: 2022-05-30

PATENT CORRECTION NOTICES

The patent application no: 2022/01936 was advertised with an incorrect priority date which appeared as **ZA 31: 2020/01234 32: 2020-02-2** in the April 2023 journal and it should have appeared as the one below but the publication date will remain the **26/04/2023**

21: 2022/01936. 22: 2022/02/15. 43: 2023/02/27
51: B65F
71: IP TRUST
72: MEINTJIES, van der Merwe, Willem, Schalk
33: ZA 31: 2019/04904 32: 2019-07-26
33: ZA 31: 2019/07729 32: 2019-11-22
33: ZA 31: 2020/01234 32: 2020-02-27
33: ZA 31: 2020/03653 32: 2020-06-18
54: A LIFTING APPARATUS
00: -
The lifting apparatus (10) includes a frame (12) mountable on a material collecting vehicle, a container receiving member (14) for receiving and engaging a container (16) to be lifted and tipped, a linkage arrangement (18) for interconnecting the container receiving member (14) and the frame (12) and for allowing continuous lifting and tipping displacement of the container receiving member (14) relative the frame (12) between a container receiving condition wherein the container receiving member (14) is proximal a ground surface (20) for facilitating receipt of the container (16) and a container tipping condition wherein the container (16) is lifted and tipped such that its contents are emptied into a collection zone (not shown) of the material collecting vehicle (not shown), a displacement means in the form of a piston-and-cylinder assembly (21) for displacing the linkage arrangement (18) and the container (16), between the container receiving and container tipping conditions.

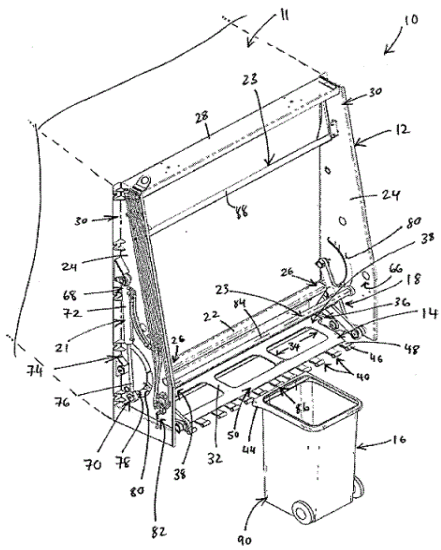

The patent under application no: **2022/12487** was advertised in the April 2023 journal with an incorrect sequence of names of the inventors and this publication should have appeared as the on below and publication date will remain the **26/04/2023.**

21: 2022/12487. 22: 2022/11/16. 43: 2023/03/27
51: A01G
71: SUN, Zhihua, XINJIANG TAIYUAN WATER TECHNOLOGY CO., LTD.
72: SUN, Zhihua, MA, Yanping, MA, Jun, GUO, Yan, ARKEN, Yasen, UMAR, Husan, YAN, Xixin, BAI, Haili, He, Jun
33: CN 31: 202111326797.0 32: 2021-11-10
54: UNDERGROUND MUSHROOM PLANTING GREENHOUSE
00: -
The present invention relates to the technical field of mushroom cultivation, and discloses an underground mushroom planting greenhouse which comprises a cultivation groove dug under the ground, a covering structure, a support frame and an environmental control mechanism. In the present application, the cultivation groove is underground, and can still play a good heat preservation role when the temperature is low; the covering structure on the top of the cultivation groove can isolate the temperature above the ground, prevent carbon dioxide in the upper greenhouse from infiltrating into the cultivation groove, ensure stability of air humidity in the cultivation groove, provide air needed for mushroom growth through a gas control assembly, exhaust the carbon dioxide accumulated during mushroom growth by an exhaust mechanism, and discharge the carbon dioxide into the greenhouse, thereby further improving a heat preservation effect of the greenhouse by using heat preservation characteristics of carbon dioxide.

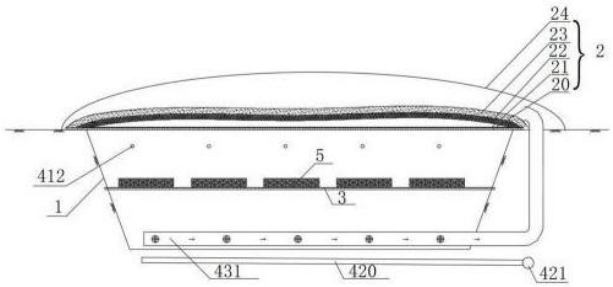

The notice of acceptance of South African Patent Application No. **2022/13282,** in the name of **SEOUL VIOSYS CO., LTD.** was erroneously published in the Patent Journal of 26 April 2023. Therefore it's publication in the Patent Journal of **26 April 2023** is null and void.

DESIGNS CORRECTION NOTICES

No records available

COPYRIGHT CORRECTION NOTICES

No records available

PATENTS

Advertisement List for May 2023

Number of Advertised Patents: 1375

Application Number	Patent Title	Filing Date
2012/06063	REVERSE AMIDE COMPOUNDS AS PROTEIN DEACETYLASE INHIBITORS AND METHODS OF USE THEREOF	2012/08/13
2014/05875	SYSTEM AND PROCESS FOR CONVERTING WHOLE TIRES AND OTHER SOLID CARBON MATERIALS INTO RECLAIMABLE AND REUSABLE COMPONENTS	2014/08/11
2015/03824	PAPER, LABELS MADE THEREFROM AND METHODS OF MAKING PAPER AND LABELS	2015/05/28
2015/04579	TREATMENT OF CIRCADIAN RHYTHM DISORDERS	2015/06/24
2015/05081	AN EXCAVATOR WEAR ASSEMBLY	2015/07/15
2015/05638	COMPOSITIONS AND METHODS OF ENHANCING IMMUNE RESPONSES TO EIMERIA OR LIMITING EIMERIA INFECTION	2015/08/05
2015/06466	COMPOSITIONS AND METHODS OF ENHANCING IMMUNE RESPONSES TO ENTERIC PATHOGENS	2015/09/03
2015/07723	SUSTAINED-RELEASE FORMULATIONS OF COLCHICINE AND METHODS OF USING SAME	2015/10/15
2016/00410	PRESSURE REDUCTION SYSTEM	2016/01/19
2016/01550	METABOLICALLY OPTIMIZED CELL CULTURE	2016/03/04
2016/03425	GRID FREQUENCY RESPONSE	2016/05/19
2016/03831	COMPOSITIONS AND METHODS FOR REDUCING MAJOR ADVERSE CARDIOVASCULAR EVENTS	2016/06/06
2016/06650	APPARATUS, SYSTEM AND METHOD FOR BLASTING	2016/09/26
2016/06666	METHOD AND DEVICE FOR FORMING GROOVES IN PIPE ELEMENTS	2016/09/27
2016/06763	AAV VECTORS FOR RETINAL AND CNS GENE THERAPY	2016/09/30
2016/07062	MODULAR EXCITER BEAM	2016/10/13
2016/08194	TEXAPHYRIN-PT(IV) CONJUGATES AND COMPOSITIONS FOR USE IN OVERCOMING PLATINUM RESISTANCE	2016/11/28
2016/08433	BI-LAYER DUAL RELEASE PROBIOTIC TABLETS	2016/12/07
2017/01332	SMOKE TRAP APPARATUS AND SYSTEM	2017/02/22
2017/02088	TELEMATICS SYSTEM, METHODS AND APPARATUS FOR TWO-WAY DATA COMMUNICATION BETWEEN VEHICLES IN A FLEET AND A FLEET MANAGEMENT SYSTEM	2017/03/24
2017/02089	OVAL-SHAPED GRILL WITH HINGED LID	2017/03/24
2017/02090	MULTI-TIERED GRILL RACK SYSTEM AND	2017/03/24

Application Number	Patent Title	Filing Date
	GRILL MOUNTS	
2017/02316	TARGET-DIRECTED MOVEMENT IN A USER INTERFACE	2017/03/31
2017/04563	SCENE RECONSTRUCTION BY ASSEMBLING IMAGES	2017/07/05
2017/04806	PERISTALTIC PUMP	2017/07/14
2017/05526	METHOD AND SYSTEM FOR MANAGING AN ELECTRONIC TOLL ACCOUNT	2017/08/15
2017/05708	INHIBITION OF OLIG2 ACTIVITY	2017/08/22
2017/06074	FUSED DIHYDRO-4H-PYRAZOLO[5,1-C][1,4]OXAZINYL COMPOUNDS AND ANALOGS FOR TREATING CNS DISORDERS	2017/09/06
2017/06277	BACTERIA IDENTIFICATION AND ANTIMICROBIAL SUSCEPTIBILITY TEST	2017/09/15
2017/06307	METHOD FOR DETERMINING GASTROINTESTINAL TRACT DYSBIOSIS	2017/09/18
2017/07915	METHOD FOR PRODUCING FREE PEARLS IN ABALONE	2017/11/21
2018/00611	MODIFIED MONOCYTES/MACROPHAGE EXPRESSING CHIMERIC ANTIGEN RECEPTORS AND USES THEREOF	2018/01/29
2018/00672	ELECTRONIC SMOKING ARTICLE	2018/01/31
2018/01192	AEROSOL DELIVERY DEVICE WITH RADIANT HEATING	2018/02/21
2018/02260	LAUNDRY METHOD, USE OF POLYPEPTIDE AND DETERGENT COMPOSITION	2018/04/06
2018/02440	CD3 BINDING POLYPEPTIDES	2018/04/13
2018/02670	LIGNOCELLULOSE POLYMER PROBES AND METHODS	2018/04/20
2018/02717	NON¿HUMAN ANIMALS HAVING A HUMANIZED LYMPHOCYTE¿ACTIVATION GENE 3	2018/04/24
2018/03554	ASEPTIC AEROSOL MISTING DEVICE	2018/05/29
2018/03950	LEG ASSEMBLY METHODS AND SYSTEMS	2018/06/13
2018/05051	EGFL6 SPECIFIC MONOCLONAL ANTIBODIES AND METHODS OF THEIR USE	2018/07/26
2018/05238	METHODS FOR INHIBITING FIBROSIS IN A SUBJECT IN NEED THEREOF	2018/08/03
2018/05750	IMPROVED APPARATUS FOR SEALING AND INFLATION OF DAMAGED INFLATABLE ARTICLES, SUCH AS PUNCTURED TIRES	2018/08/28
2018/06024	METHOD AND SYSTEM FOR PREDICTION OF A STATE OF AN ASSET	2018/09/07
2018/07034	SYSTEMS AND METHODS FOR OXIDATION OF HYDROCARBON GASES	2018/10/22
2018/07056	CONJUGATED C1 ESTERASE INHIBITOR AND USES THEREOF	2018/10/23
2018/07294	CONFECTIONERY COMPOSITION COMPRISING BRAN-LIKE MATERIAL	2018/10/31
2018/07730	AN ORAL CARE COMPOSITION	2018/11/16
2018/07852	MICROPARTICLES COMPRISING A SULPHUR-CONTAINING COMPOUND	2018/11/21

Application Number	Patent Title	Filing Date
2018/08057	SYNTHESIS OF INDAZOLES	2018/11/28
2018/08609	METHOD AND ASSEMBLY FOR THE TREATMENT OF THE ATMOSPHERE IN A STORAGE SPACE FOR VEGETABLE PRODUCTS	2018/12/20
2019/00937	ANTIBODIES AGAINST SIGNAL-REGULATORY PROTEIN ALPHA AND METHODS OF USE	2019/02/13
2019/01286	IMPROVED METHODS FOR PRODUCING POLYNUCLEOTIDE LIBRARIES IN VACCINIA VIRUS/EUKARYOTIC CELLS	2019/02/28
2019/02179	IMPROVEMENTS IN HANGER BARS	2019/04/08
2019/02933	METHODS FOR REDUCING PROTEINURIA IN A HUMAN SUBJECT SUFFERING FROM IMMUNOGLOBULIN A NEPHROPATHY	2019/05/10
2019/03833	NOVEL MULTITARGET DRUG FOR TREATING DISEASES IN MAMMALS	2019/06/13
2019/03937	POLYMORPHS	2019/06/18
2019/05210	INSTALLATION TOOL FOR A ROCK BOLT	2019/08/07
2019/05380	1-AMINO-1-CYCLOPROPANECARBOXYLIC ACID HUDROCHLORIDE FORMULATIONS	2019/08/14
2019/05404	INFORMATION SENDING METHOD AND INFORMATION RECEIVING METHOD AND APPARATUS AND COMPUTER READABLE STORAGE MEDIUM	2019/08/15
2019/05727	COMBINATION THERAPY WITH AN ANTI-AXL ANTIBODY-DRUG CONJUGATE	2019/08/30
2019/05742	SPRING COUNTER-BALANCE ASSEMBLIES AND SOLAR TRACKERS INCORPORATING SPRING COUNTER-BALANCE ASSEMBLIES	2019/08/30
2019/06201	FIRE SAFETY DEVICES METHODS AND SYSTEMS	2019/09/19
2019/06398	CASTING CORE AND METHOD FOR THE PRODUCTION THEREOF	2019/09/27
2019/06541	ISOXAZOLE DERIVATIVES AS NUCLEAR RECEPTOR AGONISTS AND USES THEREOF	2019/10/04
2019/06641	CELL PHONE COVER	2019/10/08
2019/06663	TARGET TILES FOR AN AUTOTHERMAL REFORMATION/SECONDARY REFORMATION UNIT	2019/10/09
2019/06664	AN EFFICIENT INTERLEAVER DESIGN FOR POLAR CODES	2019/10/09
2019/06872	IMPROVEMENTS IN TRAILERS AND COMBINATION VEHICLES	2019/10/18
2019/06917	ANTI-IGF-I RECEPTOR ANTIBODY	2019/10/21
2019/06940	METHOD OF RENOVATING A DOMESTIC PROPERTY	2019/10/22
2019/06978	AN ADVANCED ELECTROLYTE MIXING METHOD FOR ALL VANADIUM FLOW BATTERIES	2019/10/23
2019/07755	5-5 FUSED RINGS AS C5A INHIBITORS	2019/11/22
2019/07839	SYSTEM AND METHOD OF MULTI-ROUND TOKEN DISTRIBUTION USING A BLOCKCHAIN	2019/11/26

Application Number	Patent Title	Filing Date
	NETWORK	
2019/07862	PACK OF TOBACCO INDUSTRY PRODUCTS	2019/11/27
2019/07921	SCRIPT-BASED BLOCKCHAIN INTERACTION	2019/11/28
2019/07926	SINGLE SIDE FASTENING SYSTEM FOR IDENTIFICATION PLACARD FOR UTILITY VAULT LIDS	2019/11/28
2019/08027	LEVODOPA INFUSION SOLUTION	2019/12/03
2019/08144	HIGH THROUGHPUT SEQUENCING WITH SEMICONDUCTOR-BASED DETECTION	2019/12/09
2019/08270	PRESSURE-RESISTANT CONTAINER	2019/12/11
2019/08615	METHOD AND APPARATUS FOR CAPSULAR DELIVERY TO PLANTS	2019/12/23
2020/00261	MOUNTING ARRANGEMENT FOR TENSIONING UNITS IN TRACKED UNDERCARRIAGES OF LARGE MACHINES	2020/01/15
2020/00543	DRIVE ASSEMBLY	2020/01/27
2020/01751	MODULAR CONVEYOR BELT	2020/03/19
2020/02004	QUICK RELEASE BUCKETS FOR BUCKET WHEELS	2020/05/04
2020/02059	METHOD AND APPARATUS FOR EFFICIENT DELIVERY AND USAGE OF AUDIO MESSAGES FOR HIGH QUALITY OF EXPERIENCE	2020/05/04
2020/02113	A METHOD FOR MANUFACTURING A NANOPARTICLE MATERIAL AND A FLUORIDE ION BATTERY	2020/05/04
2020/02203	METHOD FOR IMPROVING FETAL HEMOGLOBIN EXPRESSION	2020/05/04
2020/02825	PYRIMIDINE TBK/IKKE INHIBITOR COMPOUNDS AND USES THEREOF	2020/05/15
2020/03388	PLANT-BASED PRODUCT AND PROCESS	2020/06/05
2020/04145	HIGH-THROUGHPUT METHOD FOR DETECTING TOOTH STAIN PREVENTION AND REMOVAL	2020/07/07
2020/04317	IMMUNOSTIMULATORY COMPOSITIONS	2020/07/14
2020/04823	MILD SURFACTANT PREPARATION AND METHOD THEREFOR	2020/08/04
2020/05138	SUPPORTING FRAMEWORK	2020/08/19
2020/05517	CARTRIDGE FOR ELECTRONIC DELIVERY SYSTEM	2020/09/04
2020/05661	COMBINATION THERAPY	2020/09/11
2020/06573	LIQUID DEPOT FOR NON-INVASIVE SUSTAINED DELIVERY OF AGENTS TO THE EYE	2020/10/22
2020/06581	PHENYL TRIAZOLE MLL1-WDR5 PROTEIN-PROTEIN INTERACTION INHIBITOR	2020/10/22
2020/06876	VENTILATION AND LIGHTING DEVICE	2020/11/04
2020/07022	TREATMENT AND PREVENTION OF HOUSE DUST MITE ALLERGIES	2020/11/11
2020/07026	MULTILAYERED ARTICLES	2020/11/11
2020/07030	N-(CYCLOPROPYLMETHYL)-5-(METHYLSULFONYL)-N-{1-[1-(PYRIMIDIN-2-YL)-1H-1,2,4-TRIAZOL-5-YL]ETHYL}BENZAMIDE	2020/11/11

Application Number	Patent Title	Filing Date
	DERIVATIVES AND THE CORRESPONDING PYRIDINE-CARBOXAMIDE DERIVATIVES AS PESTICIDES	
2020/07050	MODULAR MAGNETICALLY RECEPTIVE WOOD AND ENGINEERED WOOD SURFACE UNITS AND MAGNETIC BOX SYSTEM FOR COVERING FLOORS, WALLS, AND OTHER SURFACES	2020/11/12
2020/07101	A PROCESS FOR THE STEREOSELECTIVE PREPARATION OF CHIRAL 2-[(HETERO)ARYLALKYLSULFANYL]PYRIMIDINES AND PRODUCTS OBTAINABLE THEREFROM	2020/11/13
2020/07343	MELANOCORTIN SUBTYPE-2 RECEPTOR (MC2R) ANTAGONISTS AND USES THEREOF	2020/11/25
2020/07402	DISPLAY APPARATUS	2020/11/27
2020/07649	VIRUS AND ANTIGEN PURIFICATION AND CONJUGATION	2020/12/08
2021/00073	A METHOD FOR IMPROVING ROOTING STABILITY OF A SUBCULTURE BUD OF HIGH-RESIN-PRODUCTION P. MASSONIANA PLUS TREE	2021/01/04
2021/00075	COMBINATION THERAPY BY USING ANTI-GLOBO H OR ANTI-SSEA-4 ANTIBODY WITH ANTI-NEGATIVE IMMUNE CHECK POINTS ANTIBODY	2021/01/04
2021/00261	UPDATING INFUSION PUMP DRUG LIBRARIES AND OPERATIONAL SOFTWARE IN A NETWORKED ENVIRONMENT	2021/01/14
2021/00456	SHAPED FENCE	2021/01/22
2021/01273	HETEROAROMATIC NMDA RECEPTOR MODULATORS AND USES THEREOF	2021/02/25
2021/01720	SYSTEM AND METHOD FOR SECONDARY ANALYSIS OF NUCLEOTIDE SEQUENCING DATA	2021/03/15
2021/01862	A NATURAL LANGUAGE PROCESSING (NLP) BASED SYSTEM AND METHOD FOR MIXED LANGUAGE GENERATION	2021/03/18
2021/02015	COMBINATION THERAPIES	2021/03/25
2021/02136	AN AUGMENTED REALITY SYSTEM AND METHOD FOR REAL-TIME MONITORING OF USER ACTIVITIES THROUGH EGOCENTRIC VISION	2021/03/30
2021/02285	TRACK LINK WITH ANGLED SEAL COUNTERBORE	2021/04/06
2021/02870	ANTI-PD-L1/ANTI-4-1BB BISPECIFIC ANTIBODIES AND USES THEREOF	2021/04/29
2021/03152	RAPID IDENTIFICATION OF BACTERIAL PATHOGENS	2021/05/10
2021/03239	THICK NM500 WEAR-RESISTANT STEEL AND PRODUCTION METHOD THEREFOR	2021/05/13
2021/03743	A BEVERAGE CUP AND CLOSURE THEREFOR	2021/05/31
2021/04028	GASKET FOR AN ALUMINIUM FRAME ARRANGEMENT	2021/06/11

Application Number	Patent Title	Filing Date
2021/04108	SAVOURY COMPOSITION	2021/06/15
2021/04624	THERMAL ENERGY STORAGE APPARATUS	2021/07/02
2021/04645	METHOD OF AND PRODUCT FOR MAINTAINING ROADS	2021/07/05
2021/04680	IMAGING SYSTEM FOR ASSESSING INTEGRITY OF METAL MOTIVE PARTS IN INDUSTRIAL PLANTS	2021/07/05
2021/04886	ASSORTMENT OF PALLET MODULES, AND PALLET ASSEMBLY BUILT OF THE SAME	2021/07/12
2021/05027	DEVICES AND METHODS FOR COLLECTING SALIVA SAMPLES FROM THE ORAL CAVITY	2021/07/16
2021/05162	SYSTEM AND METHOD FOR THE VERIFICATION OF MEDICATION	2021/07/21
2021/05387	PHYSICAL DOWNLINK SHARED CHANNEL (PDSCH) RESOURCE MAPPING FOR MULTI-TRANSMISSION POINT (TRP)	2021/07/29
2021/05509	POSTHUMOUS MANAGEMENT OF DIGITAL OR TANGIBLE ASSETS	2021/08/03
2021/05510	HAND WASHING STATION	2021/08/03
2021/05515	COMPOSITION FOR PLANTS' ROOT DEVELOPMENT AND GROWING BAG COMPRISING IT	2021/08/03
2021/05554	METHODS FOR PRODUCING CARBON FIBERS, RESINS, GRAPHENE, AND OTHER ADVANCED CARBON MATERIALS FROM COAL	2021/08/06
2021/05561	3D PRINTED MECHANICAL LOCKS FOR END CAP POTTING	2021/08/06
2021/05562	FILTRATION MEDIA PACKS PRODUCED USING ADDITIVE MANUFACTURING	2021/08/06
2021/05732	METHODS AND SYSTEMS FOR PREDICTING RISK OF OBSERVABLE DAMAGE IN WIND TURBINE GEARBOX COMPONENTS	2021/08/12
2021/05781	INTRADIALYTIC USE OF SODIUM THIOSULFATE	2021/08/13
2021/05802	METHOD AND PLANT FOR PACKAGING PRODUCTS, AND METHOD FOR OBTAINING A PLANT AND A CONTAINER	2021/08/13
2021/05806	MULTIPLE EMULSION COMPRISING AN OIL CONTINUOUS NANOEMULSION AND A METHOD FOR USING THE SAME	2021/08/13
2021/05840	INDEPENDENT CODING OF PALETTE MODE USAGE INDICATION	2021/08/16
2021/05842	A GEMSTONE POLISHING ROBOT	2021/08/16
2021/05843	A GEMSTONE POLISHING ROBOT	2021/08/16
2021/05847	MTORC MODULATORS AND USES THEREOF	2021/08/16
2021/05889	FILTER APPARATUS, FILTER DISC SECTORS, FILTER ELEMENTS AND USES	2021/08/17
2021/05892	POST	2021/08/17
2021/05920	ANTIBODY THAT BINDS ERBB-2 AND ERBB-3	2021/08/18
2021/05932	SYSTEMS AND METHODS FOR PRODUCING MAGNETICALLY RECEPTIVE LAYERS AND MAGNETIC LAYERS FOR USE IN SURFACE	2021/08/18

Application Number	Patent Title	Filing Date
	COVERING SYSTEMS	
2021/05943	FOLDABLE ELECTRONIC DEVICE INCLUDING PLURALITY OF WINDOWS	2021/08/18
2021/05969	RAMAN MARKERS	2021/08/19
2021/05970	NOVEL HETEROTRICYCLIC DERIVATIVE COMPOUND AND USE OF SAME	2021/08/19
2021/06011	A MULTI-CHAMBER SOLAR COLLECTOR	2021/08/20
2021/06018	MICRODROPLET MANIPULATION DEVICE	2021/08/20
2021/06102	A CONTACT LENS SYSTEM	2021/08/24
2021/06234	POWDERY MILDEW RESISTANT CANNABIS PLANTS	2021/08/27
2021/06236	N-ACYL-{4-[(4-ARYL-PHENYL)SULFONYLMETHYL]PIPERIDINE} COMPOUNDS AND THEIR THERAPEUTIC USE	2021/08/27
2021/06547	A DEVICE FOR HITTING A BALL	2021/09/07
2021/07020	MESH SUPPORT	2021/09/21
2021/07121	CONTAINER CLOSURE	2021/09/23
2021/07402	FASTENER ASSEMBLY SENSOR UNIT	2021/09/30
2021/07565	RV RETROFIT SYSTEM	2021/10/07
2021/07653	PROCESS FOR THE PREPARATION OF CLC-1 CHLORIDE CHANNEL INHIBITORS	2021/10/11
2021/07655	TOPICAL FORMULATION	2021/10/11
2021/07812	DRY GRINDING SYSTEM AND METHOD FOR REDUCED TAILINGS DEWATERING, IMPROVING FLOTATION EFFICIENCY, PRODUCING DRIER TAILINGS, AND PREVENTING FILTER MEDIA BLINDING	2021/10/14
2021/07989	FRAMEWORK AND OFFSHORE SUPPORT STRUCTURES MADE THEREOF	2021/10/19
2021/08054	GLASS PROCESSING SYSTEM WITH VARIABLE BENDING STATION	2021/10/20
2021/08083	COMPOUNDS FOR THE TREATMENT OF NEUROMUSCULAR DISORDERS	2021/10/21
2021/08457	VARIOUS USES OF THE NANOPARTICULATE COMPOUND OF TITANIUM DIOXIDE FUNCTIONALIZED	2021/10/29
2021/08516	METHOD OF AMPLIFYING MRNAS AND FOR PREPARING FULL LENGTH MRNA LIBRARIES	2021/11/02
2021/08991	USE OF TELOMERASE INHIBITORS FOR THE TREATMENT OF MYELOPROLIFERATIVE DISORDERS AND MYELOPROLIFERATIVE NEOPLASMS	2021/11/12
2021/08997	CABLE KNEE BRACE SYSTEM	2021/11/12
2021/09237	RUBBER MODIFIED BITUMINOUS BINDERS	2021/11/18
2021/09264	BLAST CURTAIN	2021/10/27
2021/09660	PYRROLOBENZODIAZEPINE-ANTIBODY CONJUGATES	2021/11/26
2021/09717	CALIBRATION OF A GAS SENSOR	2021/11/29
2021/09744	ANTI-CONNECTIVE TISSUE GROWTH FACTOR ANTIBODY AND APPLICATION THEREOF	2021/11/29
2021/09914	CONTAINER DESIGNED FOR REUSE	2021/11/30
2021/10041	NICOTINE POUCH PRODUCT	2021/12/06

Application Number	Patent Title	Filing Date
2021/10127	IMAGE FORMING CONTROL METHOD, CONSUMABLE CHIP, IMAGE FORMING APPARATUS, AND CONSUMABLE	2021/12/08
2021/10216	SYSTEM FOR EXTRACTING ENERGY IN POWER CABLES FROM THE ELECTRIC FIELD	2021/12/09
2021/10256	FEMININE ABSORBENT ARTICLES WITH BONDED SIDE FLAPS AND AN APPARATUS FOR PRODUCING THE SAME	2021/12/10
2021/10267	TOKENIZED ASSET BACKED BY GOVERNMENT BONDS AND IDENTITY AND RISK SCORING OF ASSOCIATED TOKEN TRANSACTIONS	2021/12/10
2021/10415	CONTROL CONFIGURATION FOR A PLURALITY OF ENDPOINT DEVICES	2021/12/14
2021/10886	CANNABIS PLANTS WITH IMPROVED YIELD	2021/12/23
2022/00386	A SELF-LEVELING SINGLE AXLE DUMP TRUCK	2022/01/07
2022/01326	ENERGY EFFICIENT WIRELESS DETONATOR SYSTEM	2022/01/27
2022/01421	DEVICE AND METHOD FOR BREEDING, IN PARTICULAR FOR BREEDING INSECTS	2022/01/31
2022/01422	PARABOLIC TROUGH COLLECTOR MODULE, PARABOLIC TROUGH COLLECTOR MODULE UNIT, AND SOLAR THERMAL POWER PLANT	2022/01/31
2022/01541	ORAL FORMULATIONS OF EDARAVONE AND METHOD OF MANUFACTURING THEREOF	2022/02/03
2022/01655	LOCKING DEVICE WITH RENTAL REMINDER INDICATOR	2022/02/08
2022/01903	FLUID FILTER FOR A MOTOR VEHICLE AND FILTER CARTRIDGE FOR A FLUID FILTER OF THIS KIND	2022/02/14
2022/02233	CONTAINER CARRIER	2022/02/22
2022/02310	SECURITY FENCING	2022/02/23
2022/02323	ROTATING SUSPENSION POINT FOR USE WITH CONCRETE ANCHORS	2022/02/23
2022/02429	METHOD, APPARATUS, AND COMPUTER-READABLE MEDIUM FOR ADAPTIVE NORMALIZATION OF ANALYTE LEVELS	2022/02/25
2022/02568	METHOD AND SYSTEM OF OPTIMIZING STOCK AVAILABILITY AND SALES OPPORTUNITY	2022/03/02
2022/02571	NEUROTOXIN COMPOSITIONS FOR USE IN TREATING GASTROPARESIS	2022/03/02
2022/02572	LIQUID PODS FOR RECIRCULATING WATER SYSTEMS	2022/03/02
2022/02623	LED LAMP FOR INSECT TRAP	2022/03/03
2022/02672	COMPOSITIONS COMPRISING TIGOLANER FOR CONTROLLING PARASITES	2022/03/04
2022/02968	SANITISATION AND DATA COLLECTION UNIT	2022/03/11
2022/03215	DEVICE FOR STORING STANDARDIZED STORAGE GOODS IN A HIGH-BAY WAREHOUSE	2022/03/17
2022/03253	ELECTROCHEMICAL SENSOR FOR ANALYSIS OF BEVERAGES	2022/03/18
2022/03450	INTEGRATED SYSTEMS OF A MODULAR	2022/03/24

Application Number	Patent Title	Filing Date
	SUPPORT SYSTEM	
2022/03727	ELECTRO-ASSISTED PICKLING OF STEEL	2022/03/31
2022/03998	A DEVICE FOR DECREASING AN OBJECT	2022/04/06
2022/04154	TRANSPORTING AND STORAGE CONTAINER FOR PEROXIDES	2022/04/12
2022/04422	METHODS OF CANCER TREATMENT USING ANTI-OX40 ANTIBODIES IN COMBINATION WITH ANTI-TIGIT ANTIBODIES	2022/04/20
2022/04743	SYSTEM AND METHOD FOR SECURE AND CONTACTLESS FUND TRANSFER IN OPEN AND CLOSED LOOP TRANSACTIONS	2022/04/28
2022/04747	D-AMPHETAMINE COMPOUNDS, COMPOSITIONS, AND PROCESSES FOR MAKING AND USING THE SAME	2022/04/28
2022/04846	SEMI-RIGID DUCT SYSTEM	2022/05/03
2022/04983	INHIBITION OF THE VE-PTP PHOSPHATASE PROTECTS THE KIDNEY FROM ISCHEMIA-REPERFUSION INJURY	2022/05/06
2022/05546	METHODS FOR PROVIDING CONTINUOUS THERAPY AGAINST PNAG COMPRISING MICROBES	2022/05/19
2022/05605	A COLLAGEN-HYDROXYAPATITE DEVICE FOR NON-SURGICAL PERIODONTAL TREATMENT	2022/05/20
2022/06066	COLD GAS THRUSTER WITH SOLID PROPELLANT	2022/05/31
2022/06128	POWER-ON/OFF CIRCUIT FOR BATTERY MANAGEMENT SYSTEM	2022/06/01
2022/06180	TISSUE REGENERATIVE MULTI-DRUG COCKTAIL AND APPARATUS FOR DELIVERY THEREOF	2022/06/02
2022/06282	SUSTAINABLE SYSTEM FOR PROCESSING FINE TAILINGS FROM MINING, LOW-HARDNESS MINERALS AND INDUSTRIAL, ELECTRONIC AND CONSTRUCTION WASTE, AND PRODUCTS OBTAINED THEREFROM	2022/06/06
2022/06601	DEVICE AND SYSTEM FOR MONITORING AND REPORTING EQUIPMENT STATUS	2022/06/15
2022/06743	THERAPY FOR THE TREATMENT OF CANCER	2022/06/17
2022/06882	CARPET TILE, AND CARPET COVERING MADE OF SUCH CARPET TILES	2022/06/21
2022/06883	GLUE-DOWN DECORATIVE FLOOR COVERING SYSTEM	2022/06/21
2022/06902	METHOD FOR OBTAINING ONE OR MORE PROTEIN PREPARATIONS AND OIL FRACTIONS FROM SUNFLOWER SEEDS OR RAPE SEEDS	2022/06/21
2022/07008	A METHOD AND SYSTEM FOR MONITORING HEALTH RISK OF A USER	2022/06/23
2022/07058	USE OF HYALURONIC ACID DERIVATIVES IN THE REGENERATION OF BONE AND CARTILAGE TISSUES	2022/06/24
2022/07116	PIPE FLARING DEVICE	2022/06/27

Application Number	Patent Title	Filing Date
2022/07234	CHRONIC WOUND HEALING COMPOSITION AND APPLICATION THEREOF	2022/06/29
2022/07263	ELASTOGRAPHY DEVICE AND METHOD	2022/06/30
2022/07459	ALARM DEVICE FOR DETECTING INTERFERENCE	2022/07/06
2022/07670	RECOMBINANT NUCLEIC ACID CONSTRUCT AND USE THEREOF	2022/07/11
2022/07912	DRILLING ASSEMBLY FOR INSERTING A ROCK BOLT	2022/07/15
2022/08046	HIGH CURRENT SOURCE FOR A TEST SYSTEM FOR TESTING AN ELECTRICAL POWER DEVICE, AND TEST SYSTEM	2022/07/19
2022/08537	AN ENCODER, A DECODER AND CORRESPONDING METHODS FOR ADAPTIVE LOOP FILTERING	2022/07/29
2022/08586	ARRANGEMENT OF ELECTRONIC MODULES FOR IMMOBILIZING AND DEMOBILIZING GOODS VEHICLES, WITH ENGINE TAMPER DETECTION SYSTEM, AS WELL AS OPERATING PARAMETER CAPTURE AND OUT-OF-SIGNAL-COVERAGE-AREA SECURITY SYSTEM	2022/08/01
2022/08684	METHOD FOR PRODUCING MONOSULFOXIDE DERIVATIVE	2022/08/03
2022/08816	ROTOR ASSEMBLY	2022/08/05
2022/08831	SYSTEM AND METHOD OF MANAGING UNITS FOR USE IN ACCESSING A SERVICE	2022/08/08
2022/08857	CAPSULE FOR BEVERAGE	2022/08/08
2022/08931	USE OF PHARMACEUTICAL COMPOSITION IN PREPARING ANTIBACTERIAL DRUG	2022/08/09
2022/08960	SINUSOIDAL TUBULAR CONDUCTING BUSBAR	2022/08/08
2022/08961	METHOD AND PLANT FOR THE ELECTROCHEMICAL PRODUCTION OF OXYGEN	2022/08/08
2022/08996	COMPOSITIONS COMPRISING HYDROLYSED PROTEINS	2022/08/11
2022/09123	RECOMBINANT SUBUNIT VACCINE OF NOVEL CORONAVIRUS AND APPLICATION THEREOF	2022/08/15
2022/09130	NOVEL TRITERPENE DERIVATIVES AS HIV INHIBITORS	2022/08/15
2022/09168	MOBILE DUST SUPPRESSION APPARATUS	2022/08/16
2022/09175	ATMOSPHERIC WATER GENERATOR	2022/08/16
2022/09192	MULTI-DIMENSIONAL LIGAND-ASSISTED CHROMATOGRAPHY METHOD FOR THE PURIFICATION OF RARE EARTH ELEMENTS AND OTHER METAL IONS FROM WASTE MAGNETS	2022/08/16
2022/09193	QUASI-CO-LOCATION INFORMATION OBTAINING METHOD, COMMUNICATION NODE, AND STORAGE MEDIUM	2022/08/16
2022/09252	VEHICLE MOUNTED SYSTEM AND METHOD FOR DISTRIBUTED IRRITANT SPRAY	2022/08/17

Application Number	Patent Title	Filing Date
2022/09254	PROCESSES FOR UPGRADING ALKANES AND ALKYL AROMATIC HYDROCARBONS	2022/08/17
2022/09265	DEVICES AND METHOD FOR PREVENTION AND TREATMENT OF FUNGAL AND BACTERIAL MICROORGANISMS	2022/08/18
2022/09287	PAYMENT INFORMATION TRANSFER SYSTEM USING MOBILE TERMINAL AND PAYMENT INFORMATION TRANSFER METHOD USING SAME	2022/08/18
2022/09293	ISOINDOLINE DERIVATIVE, AND PHARMACEUTICAL COMPOSITION AND USE THEREOF	2022/08/18
2022/09340	CELLULAR UPTAKE	2022/08/19
2022/09355	MULTIFUNCTIONAL AUTOMATIC DETECTION PLATFORM BASED ON MACHINE VISION TECHNOLOGY	2022/08/19
2022/09372	SOLAR ENERGY SYSTEM WITH EFFICIENCY ENHANCEMENT	2022/08/22
2022/09402	CLAMPING VEHICLE LANE CONTROL METHOD AND SYSTEM, ELECTRONIC DEVICE AND STORAGE MEDIUM	2022/08/22
2022/09481	BENZIMIDAZOLONE-BASED CINNAMAMIDE DERIVATIVE AS TRPV1 ANTAGONIST AND PHARMACEUTICAL COMPOSITION FOR TREATMENT OR PREVENTION OF PAIN CONTAINING SAME AS ACTIVE INGREDIENT	2022/08/24
2022/09535	METHOD OF AND SYSTEM FOR MANAGING A WATER FILTRATION ARRANGEMENT	2022/08/25
2022/09557	COMPACT HYDRAULIC PINNED JAW CRUSHER SYSTEM WITH HIGH SIZE REDUCTION RATIO	2022/08/26
2022/09559	A HIGHLY SOLUBLE PEA PROTEIN AND THE PREPARATION METHOD THEREOF	2022/08/26
2022/09583	BORON CARRYING AGENT FOR INTEGRATED TUMOR DIAGNOSIS AND TREATMENT, AND PREPARATION METHOD THEREFOR AND USE THEREOF	2022/08/26
2022/09663	TELEHANDLER WITH IMPROVED WINCH	2022/08/30
2022/09721	DIGITAL FIAT CURRENCY	2022/08/31
2022/09733	RELATIVE POSITIONING ASSISTANCE INFORMATION	2022/08/31
2022/09819	CONTAINER AND METHOD OF ERECTING A CONTAINER	2022/09/02
2022/09820	BEARING EXTRACTION FROM A STUFFING BOX OF A ROTARY MECHANICAL DEVICE	2022/09/02
2022/09826	INACTIVATED SARS-COV-2 VIRUS VACCINE	2022/09/02
2022/09836	BATTERY ASSEMBLY	2022/09/02
2022/09891	BCL-2 INHIBITOR	2022/09/05
2022/09922	SYSTEM AND PROCESS FOR DESULPHURISATION OF PYROLYSIS FEEDSTOCKS	2022/09/06
2022/09962	DEGRADATION OF BRUTON'S TYROSINE KINASE (BTK) BY CONJUGATION OF BTK	2022/09/07

Application Number	Patent Title	Filing Date
	INIDBITORS WITH E3 LIGASE LIGAND AND METHODS OF USE	
2022/09981	IMAGE PREDICTION METHOD, ENCODER, DECODER AND STORAGE MEDIUM	2022/09/07
2022/09992	SOL APPLICATION METHODS	2022/09/07
2022/10103	PREPARATION OF A CONFECTIONERY	2022/09/12
2022/10203	METHODS FOR RECEIVING AND SENDING CONTROL SIGNALING, AND COMMUNICATION NODE	2022/09/14
2022/10246	ATMOSPHERIC WATER GENERATING APPARATUS AND SYSTEMS FOR PRODUCING WATER FROM MOISTURE-LADEN AIR	2022/09/15
2022/10396	MODIFIED SURGE ARRESTOR AND ADAPTER	2022/09/20
2022/10401	PAIN-RELIEVING GRAIN-MOXIBUSTION MEDIUM AND ITS PREPARATION METHOD	2022/09/20
2022/10404	EASY-TO-EXTRACT BOOK COMPACT SHELF	2022/09/20
2022/10407	USE OF A POLAR EXTRACT OF SKELETONEMA IN PHOTODYNAMIC THERAPY	2022/09/20
2022/10418	STRUCTURAL NODE FOR A MOTOR VEHICLE FRONT LOWER LOAD PATH, AND PROCESS FOR ASSEMBLING SAID STRUCTURAL NODE.	2022/09/20
2022/10419	INFLUENZA VIRUS-LIKE PARTICLES (VLPS)	2022/09/20
2022/10463	ROTARY PERCUSSIVE HYDRAULIC DRILL PROVIDED WITH A SHANK EQUIPPED WITH COUPLING SPLINES	2022/09/21
2022/10469	A NOVEL WOUND GEL COMPOSITION	2022/09/21
2022/10481	SOLUBLE ACE2 AND FUSION PROTEIN, AND APPLICATIONS THEREOF	2022/09/21
2022/10488	THERAPEUTIC LIGHTING DEVICES AND METHODS	2022/09/21
2022/10514	NON-SUPPORTING TELESCOPING CLOSURE MONITORING POST	2022/09/22
2022/10539	AN ENCODER, A DECODER AND CORRESPONDING METHODS	2022/09/22
2022/10540	WIDE-AREA POWER SUPPLY SYSTEM	2022/09/22
2022/10547	SUPPORT STATUS INDICATOR AND GROUND MOVEMENT EARLY WARNING DEVICE	2022/09/22
2022/10571	VEHICLE INSTALLATIONS	2022/09/23
2022/10586	LIPOPHILIC ENANTIOMERS OF DESACETYLGLUCOSAMINE MURAMYL DIPEPTIDE WITH ANTI-INFLAMMATORY AND GROWTH PROMOTING ACTIVITY	2022/09/23
2022/10685	DRIVE MECHANISM FOR A CRUSHER	2022/09/27
2022/10686	A METHOD FOR DETECTING PRESENCE OF MYCOBACTTERIA SPECIES IN A TEST SAMPLE	2022/09/27
2022/10687	A METHOD OF ENHANCING ETHANOL FERMENTATION	2022/09/27
2022/10745	METHOD FOR THE PRODUCTION OF AAV	2022/09/28
2022/10773	PYRIDO[2,3-B] [1,4] OXAZINES OR TETRAHYDROPYRIDO[2,3-B][1,4] OXAZEPINES AS IAP ANTAGONISTS	2022/09/29
2022/10780	METHOD FOR CHECKING THE FUNCTIONALITY	2022/09/29

Application Number	Patent Title	Filing Date
	OF A VIBRATORY CONVEYOR DEVICE	
2022/10837	ELECTRIC ENERGY TRANSMISSION ALUMINUM PART AND MACHINING PROCESS THEREFOR	2022/09/30
2022/10865	A SYSTEM FOR PROVIDING USER-SPECIFIC TAX REFUNDS	2022/10/03
2022/10902	INJECTION-MOLDED WIRE HARNESS AND MOLDING METHOD	2022/10/04
2022/10906	POWER COMPONENT OF THREE-LEVEL CONVERTER, THREE-LEVEL CONVERTER AND WIND TURBINE	2022/10/04
2022/10930	LIQUID AND SLURRY MIXERS	2022/10/05
2022/10931	NOBLE AND BASE METAL RECOVERY PROCESS WHERE CYANIDE IS USED	2022/10/05
2022/10940	HYDRAULICALLY LOCKED TOOL	2022/10/05
2022/10950	ELECTRIC ENERGY TRANSMISSION ALUMINUM PART, ALUMINUM CONNECTOR AND COPPER-ALUMINUM JOINT	2022/10/05
2022/10951	SPECIAL-SHAPED JOINT	2022/10/05
2022/10952	ELECTRIC ENERGY TRANSMISSION JOINT AND PREPARATION METHOD THEREFOR	2022/10/05
2022/10989	DEVICE FOR DESALINATION BY LIQUID WATER JET COMPRESSION	2022/10/06
2022/11002	A CLOUD CONNECTOR SYSTEM FOR ESTABLISHING A SECURE CONNECTION BETWEEN CLOUD SERVER AND A TENANT	2022/10/07
2022/11068	KEY GRINDING PAN SEGMENT, GRINDING PAN SEGMENT SYSTEM, AND METHOD FOR SAME	2022/10/10
2022/11077	SIMULTANEOUS PRODUCTION OF HIGH VALUE DE-AROMATIZED KEROSENE AND BTX FROM REFINERY HYDROCARBONS	2022/10/10
2022/11112	COPPER-ALUMINUM COMPOSITE ELECTRIC ENERGY TRANSMISSION SYSTEM AND PROCESSING METHOD THEREFOR	2022/10/11
2022/11140	A CARBON DIOXIDE CAPTURE SYSTEM COMPRISING A COMPRESSOR AND AN EXPANDER AND A METHOD OF USING SUCH A SYSTEM	2022/10/11
2022/11159	PEAR PROCESSING METHOD AND MULTILANE APPARATUS	2022/10/12
2022/11164	ANTENNA ARRAY MODULE	2022/10/12
2022/11200	TRACKING METHOD AND DEVICE	2022/10/13
2022/11240	METHOD FOR CONVERTING METHANOL IN FLUIDIZED BED REACTOR	2022/10/13
2022/11266	METHODS OF GENERATING MIDBRAIN DOPAMINE NEURONS, MIDBRAIN NEURONS AND USES THEREOF	2022/10/13
2022/11288	CHLORINE DIOXIDE TEAT DIPSOLUTION USED FOR DAIRY COWS BEFORE AND AFTER MILKING, AND PREPARATION METHOD THEREOF	2022/10/14
2022/11322	AN APPARATUS AND A METHOD FOR	2022/10/14

Application Number	Patent Title	Filing Date
	DETERMINING CHARACTERISTICS OF A FLUID	
2022/11323	FLOATING VESSEL FOR ENERGY HARVESTING	2022/10/14
2022/11365	A METHOD FOR ACQUIRING OBJECT IMAGE OF UTERINE FIBROID BASED ON RESIDUAL NETWORK STRUCTURE	2022/10/17
2022/11372	CONVERSION SYSTEM	2022/10/18
2022/11381	A CARTRIDGE FOR PRODUCING ENERGY	2022/10/18
2022/11389	APPLICATION OF COMPOUNDS IN CONTROLLING OR KILLING MITES	2022/10/18
2022/11413	METHOD FOR ADJUSTING EMPTY BED AIR VELOCITY IN FLUIDIZED BED	2022/10/18
2022/11474	A DEVICE FOR USE IN INSULATING A PIPE	2022/10/19
2022/11495	SELF-ASSEMBLING OXYGEN CARRIER COMPOSITIONS	2022/10/20
2022/11509	GAS INJECTION DEVICE	2022/10/20
2022/11510	A METHOD OF CASTING A STEEL SEMI-PRODUCT WITH HIGH TITANIUM CONTENT	2022/10/20
2022/11527	A GRINDING MILL ROTOR	2022/10/21
2022/11529	METHODS FOR DETECTING LOW LEVELS OF COVID-19 VIRUS	2022/10/21
2022/11582	REMOTE TOWER ASSET MONITORING SYSTEM (RTAMS)	2022/10/24
2022/11588	AUTOMATIC POOL CLEANER COVERAGE ENHANCING ACCESSORY	2022/10/24
2022/11590	ROCKER REINFORCEMENT FOR AN ELECTRIC VEHICLE	2022/10/24
2022/11647	CHANGE SYSTEM FOR WEAR PARTS OF AN EXCAVATOR BUCKET OF AN EARTHMOVING MACHINE	2022/10/25
2022/11649	CARTRIDGE	2022/10/25
2022/11650	A REACTOR WITH AN ELECTRICALLY HEATED STRUCTURED CERAMIC CATALYST	2022/10/25
2022/11870	IMIDAZOLIDINONE DERIVATIVES AND MEDICAL USE THEREOF	2022/10/31
2022/11871	SYSTEM, METHOD AND APPARATUS FOR IRRIGATION CONTROL AND DATA MANAGEMENT	2022/10/31
2022/11872	HEAT STORE WITH RAILS AS HEAT-STORAGE BODIES	2022/10/31
2022/11895	PLASTIC CONTAINER	2022/11/01
2022/11921	A HEADREST ADVERTISING MEANS	2022/11/02
2022/12031	APPLICATION OF COMPOSITION OF BERGAPTEN AND QUERCETIN FLAVONE IN PREPARING MEDICINE FOR TREATING CANCER	2022/11/03
2022/12070	A SYSTEM FOR DATA ENCRYPTION BASED ON CLOUD CRYPTOGRAPHY AND METHOD THEREOF	2022/11/04
2022/12103	GESTURE LANCE	2022/11/07
2022/12104	VOICE ASSISTANT SYSTEM WITH VOICE RECOGNITION INTELLIGENCE	2022/11/07

Application Number	Patent Title	Filing Date
2022/12105	A DEVICE FOR DESIGNING HAFNIUM (IV) OXIDE (HFO2)/ SILICON DIOXIDE (SIO2) ENCAPSULATION-BASED III-NITRIDE MULTI-QUANTUM WELL NANOWIRE WHITE-LED	2022/11/07
2022/12118	AN AUTOMATIC LIBRARY BOOKSHELF CLEANING ROBOTIC DEVICE	2022/11/07
2022/12119	SYNTHESIS PROCESS OF ORANGE-DEEP RED EMITTING SM3+, EU3+, PR3+ TRIPLE ACTIVATED KBA2(PO3)5 PHOSPHITE GLASS FOR WLEDS	2022/11/07
2022/12120	A KATI BASTI INSTRUMENT FOR LOW BACK PAIN	2022/11/07
2022/12178	METHOD FOR OBTAINING A FIBROUS PREPARATION FOR IMMERSION-RESISTANT OPAQUE PAPER	2022/11/08
2022/12197	COMPOSITION AND METHOD FOR SUPPRESSING SUNBURN AND BROWNING IN PLANTS AND PLANT PARTS	2022/11/09
2022/12367	A SYSTEM FOR AUTOMATIC KITCHEN EXHAUST	2022/11/14
2022/12368	A VIRTUAL ASSISTANT FOR SMART HOME AND AUTOMATION APPLICATIONS	2022/11/14
2022/12369	ZEBRA CROSSING SAFETY DEVICE	2022/11/14
2022/12370	A BLOCKCHAIN ENABLED DECENTRALIZED VOTING SYSTEM	2022/11/14
2022/12371	A METHOD FOR SYNTHESIZING NOVEL SUBSTITUTED DERIVATIVES OF OXADIAZOLE AS POTENT ANTICONVULSANT AND ANTIMICROBIAL AGENT	2022/11/14
2022/12372	A METHOD FOR MANUFACTURING FLY-ASH PELLETS WITH PROVISION OF FIBERS	2022/11/14
2022/12384	EFFICIENT EXTRACTION METHOD OF AMYGDALIN FROM SEMEN PERSICAE AND APPLICATION THEREOF	2022/11/14
2022/12526	TRIAZINE DERIVATIVE HAVING VIRUS PROPAGATION INHIBITORY EFFECT, AND PHARMACEUTICAL COMPOSITION CONTAINING SAME	2022/11/16
2022/12529	REINFORCED ANTI-SEISMIC STRUCTURE SUITABLE FOR URBAN UNDERGROUND COMPREHENSIVE PIPE GALLERY	2022/11/16
2022/12565	BLASTING SYSTEM	2022/11/17
2022/12566	A SAFETY ARRANGEMENT FOR A WIRELESS BLASTING SYSTEM	2022/11/17
2022/12794	HOT-FORGING DIE STEEL AND MANUFACTURING METHOD THEREOF AS WELL AS PISTON FORGING MOLDING DIE AND MANUFACTURING METHOD THEREOF	2022/11/24
2022/12830	A METHOD OF ECOLOGICAL SOIL REMEDIATION	2022/11/25
2022/12831	PREPARATION METHOD OF DICTYOPHORA RUBROVALVATA M.ZANG MUSHROOM STICK	2022/11/25

Application Number	Patent Title	Filing Date
2022/12832	UNDERGROWTH PLANTING METHOD OF DICTYOPHORA RUBROVALVATA M.ZANG	2022/11/25
2022/12833	A CLASSIFICATION METHOD OF FINANCIAL TIME SERIES BASED ON LOW FREQUENCY INFORMATION REPRESENTATION	2022/11/25
2022/12834	HIELD REPAIR METHOD OF HUMAN FACE MASK FOR EPIDEMIC PREVENTION AND CONTROL	2022/11/25
2022/12835	PREPARATION METHODS OF LIQUID CULTURE MEDIUM AND LIQUID STRAIN OF DICTYOPHORA RUBROVALVATA M.ZANG	2022/11/25
2022/12836	A SET OF ROADSIDE MOBILE INTELLIGENT ANTI-ICE AND SNOW-MELT EQUIPMENT	2022/11/25
2022/12837	A COMPOUND AND ITS APPLICATIONS	2022/11/25
2022/12900	AN ENERGY-SAVING AND ENVIRONMENT-FRIENDLY THERMAL INSULATION MATERIAL FOR WALLS AND ITS PREPARATION METHOD	2022/11/28
2022/12904	EASY-TO-MOUNT INTELLIGENT AIR VALVE	2022/11/28
2022/13179	AN ASEPTIC LIQUID PACKAGING CONTAINER	2022/12/05
2022/13200	THREE-DIMENSIONAL BEAMFORMING METHOD OF A MINIATURIZED VOLUME ARRAY BASED ON ACOUSTIC VECTOR HYDROPHONE	2022/12/06
2022/13404	COMBINATION WALL AND FENCE SYSTEM WITH INTRUSION DETECTION	2022/12/12
2022/13406	A PRODUCTION PROCESS FOR ORGANOSILICON TERNARY COPPER CATALYSTS	2022/12/12
2022/13524	MULTILAYERED BUCCAL PATCH OF ANTIHYPERTENSIVE DRUGS	2022/12/14
2022/13525	TOPICAL FORMULATION OF BERBERIS ARISTA IN INFECTIOUS WOUND HEALING	2022/12/14
2022/13647	ANALYSIS OF SINGLE PHOTON DETECTORS IN DIFFERENTIAL PHASE SHIFT QUANTUM KEY DISTRIBUTION	2022/12/19
2023/00405	HIGH-SPEED RANDOM NUMBER GENERATOR	2023/01/10
2023/00572	HERBAL MASSAGE OIL FOR PAIN MANAGEMENT BY QPS TECHNOLOGY	2023/01/13
2023/00660	POWER DISTRIBUTION METHOD FOR PHOTOVOLTAIC POWER STORAGE STATION GROUP TO PARTICIPATE IN POWER GRID STABILITY CONTROL	2023/01/16
2023/00694	SINTERING TOOL FOR THIN-WALL CERAMIC TUBES	2023/01/17
2023/00695	METAL ORGANIC FRAMEWORK FOR ADSORBING FORMALDEHYDE, AND PREPARATION METHOD AND APPLICATION THEREOF	2023/01/17
2023/00696	SYNERGETIC MINING METHOD FOR CLOSE-DISTANCE COAL SEAM AND OVERLYING SECTION COAL PILLAR	2023/01/17
2023/00756	BIT 1T/2H-MOS2/NI CHAIN/RGO AEROGEL COMPOSITE WAVE-ABSORBING MATERIAL	2023/01/17

Application Number	Patent Title	Filing Date
	AND PREPARATION METHOD THEREOF	
2023/00798	CALIBRATION DEVICE FOR THE DATA COLLECTION AND DETECTION EQUIPMENT OF THE PIPE PILE BEARING CAPACITY DATABASE	2023/01/18
2023/00843	SYSTEM FOR GENERATING AN ENERGY-EFFICIENT TRACK VEHICLE IN MOTION	2023/01/18
2023/00845	MOTOR VEHICLE WITH A COMPUTER DEVICE	2023/01/18
2023/00846	GENERATING AN ADJUSTMENT ENERGY-EFFICIENT TRACK FOR A VEHICLE	2023/01/18
2023/00847	METHOD FOR GENERATING A GRAPHICAL USER INTERFACE AND A NON-TRANSITORY COMPUTER-READABLE MEDIUM	2023/01/18
2023/00848	DEVICE FOR GENERATING A GRAPHICAL USER INTERFACE AND A SYSTEM FOR GENERATING A GRAPHICAL USER INTERFACE	2023/01/18
2023/00855	A SMART WORK STATION WITH DETACHABLE FOLDING AND UNFOLDING	2023/01/19
2023/00882	A MULTIFUNCTION CLOTH DRYING AND SANITIZING CLOSET	2023/01/20
2023/00883	A NOVEL FORTIFIED FOOD PRODUCT FOR DIABETIC PATIENTS AND PROCESS THEREOF	2023/01/20
2023/00884	A NOVEL METHOD OF HIGH STRENGTH REINFORCED CEMENT CONCRETING	2023/01/20
2023/00885	SMART LIBRARY MANAGEMENT SYSTEM FOR EASY TRACKING	2023/01/20
2023/00886	A SMART PRAKRITI PREDICATION SYSTEM USING ARTIFICIAL INTELLIGENCE	2023/01/20
2023/00887	A NOVEL BEE POLLEN INCORPORATED FRUIT BASED FUNCTIONAL SPREAD AND PROCESS THEREOF	2023/01/20
2023/00888	AN IOT ENABLED VERTICAL GARDEN ASSEMBLY	2023/01/20
2023/00889	A NOVEL METHOD FOR DEVELOPING CIS-GENIC HOLY BASIL (OCIMUM TENUIFLORUML.) WITH ENHANCED COLD TOLERANCE	2023/01/20
2023/00890	A NOVEL SYSTEM FOR CLEANING SOLAR PANNEL WITH WATER HARVESTING	2023/01/20
2023/00910	EASY TO CONNECT FIXED PLASMA POWER SUPPLY	2023/01/20
2023/00938	EASY TO DISASSEMBLE AND CHECK THE PLASMA POWER CABINET	2023/01/23
2023/00939	PLASMA POWER SUPPLY WITH SURFACE COOLING STRUCTURE	2023/01/23
2023/00940	PLASMA POWER SUPPLY WITH AUXILIARY MOUNTING STRUCTURE	2023/01/23
2023/00941	ANTI-CLIMBING RISK CT POLARITY TEST METHOD	2023/01/23
2023/00942	ANTI-CONTACT LEAKAGE TYPE PLASMA POWER SUPPLY	2023/01/23
2023/00943	CIRCULATING COOLING TYPE PLASMA POWER SUPPLY	2023/01/23
2023/00945	A NOVEL ECO FRIENDLY METHOD OF MAKING	2023/01/23

Application Number	Patent Title	Filing Date
	COMPRESSED BOARD FROM AGRIWASTE AND SOLID WASTE	
2023/00946	A DEVICE FOR DYNAMIC AND EFFICIENT SPECTRUM UTILIZATION FOR 6G COMMUNICATIONS	2023/01/23
2023/00947	CIRCULAR PATCH MICROSTRIP ANTENNA FOR MID BAND 5G APPLICATIONS	2023/01/23
2023/00948	A NOVEL DESIGN FOR SLANT BACK TAIL GENERTAION AIRCRAFT	2023/01/23
2023/00949	A COMPACT CPW MICROSTRIP PATCH ANTENNA FOR IOT APPLICATION	2023/01/23
2023/00950	A FLEXIBLE CONNECTING DEVICE FOR TRACTORS	2023/01/23
2023/00951	A MULTI-FUNCTIONAL WILD BOAR TRAP	2023/01/23
2023/00952	A NOVEL TERMINALIA ARJUNA BASED SHRIKHAND AND PROCESS THEREOF	2023/01/23
2023/00953	METHOD FOR DEVELOPING CHICKPEAS WITH ENHANCED OMEGA-3 ALPHA-LINOLENIC ACID CONTENT	2023/01/23
2023/00954	A METHOD OF VERTICAL TAKE OFF AND LANDING FOR NEW GENERATION ELECTRIC AIRCRAFTS	2023/01/23
2023/00955	VEHICLE PARKING ASSISTANCE SYSTEM AND METHOD THEREOF	2023/01/23
2023/00956	IOT AND DEEP LEARNING BASED SMART RENEWABLE ENERGY SYSTEM	2023/01/23
2023/00957	A NOVEL PROCESS FOR BATTERY RECYCLABILITY FOR USE IN SUPERCAPACITOR	2023/01/23
2023/00958	MODIFIED ENTROPY LEAST SQUARE CHANNEL ESTIMATION FOR 5G MULTI CARRIER SYSTEM	2023/01/23
2023/00959	PLANTAR ARCH STIMULATOR FOR FLAT AND PRONATED FOOT	2023/01/23
2023/01001	CLOSURES AND VESSELS WITH CLOSURES	2023/01/23
2023/01006	A NOVEL DEVICE FOR FROZEN SHOULDER	2023/01/24
2023/01011	INTERNET OF THINGS (IOT) BASED HUMIDIFIER	2023/01/24
2023/01013	APPARATUS FOR PREDICTING STRUCTURAL INTEGRITY OF WOODEN FURNITURE	2023/01/24
2023/01014	GLARE ELIMINATION SYSTEM AND METHOD THEREOF	2023/01/24
2023/01015	MEDICAL IDENTIFICATION SYSTEM AND METHOD THEREOF	2023/01/24
2023/01016	INTERNET OF THINGS BASED SOLAR POWER GENERATION SYSTEM AND METHOD THEREOF	2023/01/24
2023/01017	A NOVEL ECO-FRIENDLY FORMULATION FOR CONTROLLING DENGUE VECTOR	2023/01/24
2023/01166	A TARGET ASSIGNMENT METHOD FOR SPACECRAFT GROUP COUNTERMEASURES BASED ON DECISION TREE SEARCH	2023/01/30

Application Number	Patent Title	Filing Date
2023/01167	METHOD AND SYSTEM FOR BUILDING USER-LEVEL THREAD MANAGEMENT ENVIRONMENT	2023/01/30
2023/01168	PREPARATION METHOD OF TRICHODERMA BIOCONTROL GRANULES BASED ON SORGHUM GRAIN CARRIERS	2023/01/30
2023/01169	TUNNEL CONSTRUCTION METHOD FOR WATER-RICH FAULT FRACTURE ZONE	2023/01/30
2023/01170	METHOD FOR INHIBITING CITRUS FRUIT PUFFINESS	2023/01/30
2023/01171	INTELLIGENT NURSING BED CAPABLE OF PREVENTING BEDSORES AND USED FOR HOME-BASED CARE OF DISABLED ELDER	2023/01/30
2023/01172	NOVEL ANGELICA SINENSIS SEEDLING MEDIUM	2023/01/30
2023/01173	PLANTING METHOD FOR IMPROVING SURVIVAL RATE OF MALANIA OLEIFERA	2023/01/30
2023/01174	METHOD FOR RECODING ULTRA-HIGH-DEFINITION DIGITAL IMAGE ONTO MICROFILM	2023/01/30
2023/01175	NUTRITIONAL PASTE BENEFICIAL TO ENHANCING IMMUNITY AND PREPARATION METHOD THEREOF	2023/01/30
2023/01176	THREE-DIMENSIONAL VIBRATORY COMPACTION-BASED CASTING PLATFORM FOR HYDRAULIC SUPPORT	2023/01/30
2023/01177	CIRCULATING WATER TREATMENT DEVICE FOR AQUACULTURE	2023/01/30
2023/01178	PREPARATION METHOD OF POLYVINYL ALCOHOL WITH LOW POLYMERIZATION DEGREE BY SURFACTANT-FREE EMULSION POLYMERIZATION	2023/01/30
2023/01179	FRUITING METHOD OF PLEUROTUS NEBRODENSIS	2023/01/30
2023/01180	METHOD FOR PREPARING STARTER CULTURE FOR DEGRADING MUSHROOM BRAN OF EDIBLE MUSHROOMS UTILIZING MICROFLORA OF EARTHWORMS	2023/01/30
2023/01181	METHOD FOR PROCESSING FOOD BY FERMENTATION OF GANODERMA LUCIDUM IN GRAIN	2023/01/30
2023/01182	CULTIVATION METHOD OF PLEUROTUS MUSHROOM	2023/01/30
2023/01183	RAPID OFFLINE LOCALIZATION FINGERPRINT DATABASE CONSTRUCTION AND LOCALIZATION METHOD	2023/01/30
2023/01184	SMART DORMITORY SAFETY MANAGEMENT SYSTEM	2023/01/30
2023/01185	TRACTOR FOR TELESCOPIC DEVICE OF BELT CONVEYOR	2023/01/30
2023/01186	METHOD FOR PREPARING METALLIC ANTIMONY BY MICROWAVE DIRECT REDUCTION OF ANTIMONY OXIDE POWDER	2023/01/30
2023/01187	METHOD FOR STABILIZING THALLIUM-	2023/01/30

Application Number	Patent Title	Filing Date
	CONTAINING SLUDGE	
2023/01188	GARMENT IRONING AND SETTING DEVICE	2023/01/30
2023/01189	CULTIVATION METHOD FOR COTTON CENTRALIZED BOLL OPENING AND HARVESTING	2023/01/30
2023/01190	PREDICTION MODEL CONSTRUCTION METHOD FOR PREDICTING SECONDARY DELIRIUM IN ELDERLY SEPSIS PATIENTS	2023/01/30
2023/01191	AIR PURIFIER FOR EFFECTIVELY REMOVING INDOOR VOLATILE ORGANIC POLLUTANTS AND PREPARATION METHOD THEREOF	2023/01/30
2023/01192	V-SHAPED GROOVE MOS STRUCTURE WITH HAFNIUM OXIDE MATERIAL AS GATE DIELECTRIC LAYER AND PREPARATION METHOD THEREOF	2023/01/30
2023/01193	METHOD FOR DETERMINING CRITICAL CATASTROPHIC DISTANCE OF TUNNEL BASED ON CATASTROPHE THEORY	2023/01/30
2023/01196	A RECIPROCATING COMPRESSOR BEARING FAULT FEATURE EXTRACTION METHOD	2023/01/30
2023/01197	PLANTING METHOD FOR COTTON-RAPE ROTATION IN CADMIUM METAL POLLUTED SOIL	2023/01/30
2023/01208	A SYSTEM AND A METHOD FOR NEUTRALIZATION OF NUCLEAR BOMBS USING ULTRA-HIGH ENERGY NEUTRINO BEAM	2023/01/30
2023/01213	CEREAL CARBOHYDRATE MATRIX FOR USE IN FOOD FOR SPECIAL MEDICAL PURPOSE AND PREPARATION METHOD FOR MATRIX	2023/01/30
2023/01218	METHOD FOR PROMOTING GROWTH OF ROOT TUBERS OF RHIZOME-TYPE MEDICINAL MATERIALS IN PLANT FACTORIES	2023/01/30
2023/01243	ANIMAL TRACKING DEVICE	2023/01/31
2023/01244	PREPARATION METHOD AND APPLICATION METHOD FOR CHILLED MEAT PRESERVATIVE	2023/01/31
2023/01245	DEVICE FOR FEEDING RHINOCORIS FUSCIPES WITH VESTIGIAL WING DROSOPHILAS	2023/01/31
2023/01246	PROCESS FOR PREPARING ANTIBACTERIAL HIGH COUNT YARN FROM COPPER ION POLYESTER FIBERS AND REGENERATED CELLULOSE FIBERS	2023/01/31
2023/01247	METHOD FOR REAL-TIME AUTOMATIC MONITORING OF SOIL FAUNA ON GROUND SURFACE	2023/01/31
2023/01248	AERIAL SPRAYING SYSTEM FOR PESTICIDE	2023/01/31
2023/01249	UNMANNED AERIAL VEHICLE FOR SPRAYING PESTICIDE	2023/01/31
2023/01250	HOUSING BUILDING ESCAPE STRUCTURE	2023/01/31
2023/01251	GREASE PUMP FOR EASY BATTERY REPLACEMENT	2023/01/31
2023/01252	HEAT PRESERVATION DEVICE FOR AQUACULTURE	2023/01/31

Application Number	Patent Title	Filing Date
2023/01253	POSTURE FIXING AND CORRECTING PAD FOR THYROID AND BREAST SURGERY	2023/01/31
2023/01254	PREPARATION OF EPOXY RESIN/SILICON OXIDE NANOCOMPOSITES BY CENTRIFUGAL ASSISTED METHOD MATERIALS	2023/01/31
2023/01255	A PSYCHOLOGICAL EDUCATION FOR UNIVERSITY STUDENTS WITH A HIGH MODULATING FUNCTION SANDBOX	2023/01/31
2023/01256	A VIRTUAL REALITY TRAINING PSYCHOLOGICAL EDUCATION TEACHING SYSTEM	2023/01/31
2023/01257	A COMPOSITION FOR IMPROVING RENAL INSUFFICIENCY, BLACK GINSENG EXTRACT AND ITS PREPARATION METHOD AND APPLICATION	2023/01/31
2023/01258	METHOD AND INSTRUMENT FOR MEASURING YOUNG'S MODULUS BY BEAM BENDING METHOD	2023/01/31
2023/01259	TESTING DEVICE AND ANALYSIS METHOD FOR MAGNETIC DAMPING AND DYNAMIC FRICTION COEFFICIENTS	2023/01/31
2023/01260	METHOD FOR SIMILARITY MEASUREMENT OF HUMAN BODY ACTIONS	2023/01/31
2023/01262	A SELF-ADJUSTING, DYNAMIC SYSTEM WITH REAL-TIME INTELLIGENCE, MACHINE LEARNING, AND AUTOMATION TO ANALYSE CYBER RISKS IN HARSH SITUATIONS	2023/01/31
2023/01264	METHOD FOR SEARCHING FOR OROGENIC GOLD DEPOSITS	2023/01/31
2023/01274	FERMENTATION DEVICE AND METHOD FOR PARTRIDGE CHICKEN FEED PROCESSING PROTEIN ADDITIVE	2023/01/31
2023/01290	EXPERIMENTAL RESEARCH METHOD OF INTEGRATION OF DEPOSITION PHYSICAL SIMULATION AND DEPOSITION NUMERICAL SIMULATION BASED ON SOURCE-SINK SYSTEM	2023/02/01
2023/01291	SPLICED NON-LOAD-BEARING BUILDING WALLS	2023/02/01
2023/01292	SPLICED BUILDING TEMPLATE FRAME	2023/02/01
2023/01293	AUTOMATIC DUMPING CEMENT MIXING EQUIPMENT	2023/02/01
2023/01294	SAND AUTOMATIC SCREENING DEVICE	2023/02/01
2023/01295	SPLICE BUILDING TEMPLATE	2023/02/01
2023/01296	SMALL AUTOMATED REBAR CUTTING EQUIPMENT	2023/02/01
2023/01297	AN INTELLIGENT REMOTE MONITORING AND DIAGNOSIS SYSTEM FOR AGRICULTURAL GREENHOUSES	2023/02/01
2023/01298	METHOD FOR DETERMINING SPATIAL DISTRIBUTION OF CARBON EMISSIONS	2023/02/01
2023/01299	SUPPORT CARRIER FOR CIVIL ENGINEERING	2023/02/01

Application Number	Patent Title	Filing Date
	BRIDGE CONSTRUCTION	
2023/01300	ENVIRONMENT-FRIENDLY CONSTRUCTION WASTE TREATMENT DEVICE FOR CIVIL ENGINEERING	2023/02/01
2023/01301	ATMOSPHERE PROTECTION SYSTEM FOR LASER ADDITIVE MANUFACTURING AND LASER ADDITIVE MANUFACTURING EQUIPMENT	2023/02/01
2023/01302	EXPERIMENTAL INSTRUMENT FOR MEASURING THE SURFACE TENSION COEFFICIENT OF LIQUID AND ITS MEASURING METHOD	2023/02/01
2023/01303	FEED PRODUCTION EQUIPMENT AND METHOD	2023/02/01
2023/01304	AN INTELLIGENT IONIZATION PURIFICATION AND DUST-REMOVAL EQUIPMENT FOR LIVESTOCK AND POULTRY HOUSING	2023/02/01
2023/01305	CLOSED CARRIER FOR HUMAN EMBRYO RAPID FREEZING	2023/02/01
2023/01306	A SYSTEM FOR PREPARING IPOMOEA PES-CAPRAE EXTRACT AND TREATING MELANOMA CANCER	2023/02/01
2023/01307	A METHOD FOR EVALUATING THE EFFICACY OF INDIGENOUS THERAPEUTIC FOOD IN MANAGING THE SEVERE ACUTE MALNUTRITION WITHOUT COMPLICATIONS	2023/02/01
2023/01308	AN IPOMOEA PES-CAPRAE EXTRACT COMPOSITION FOR TREATMENT OF MELANOMA CANCER AND ITS PREPARATION METHOD THEREOF	2023/02/01
2023/01415	STRONG MAGNETIC SEPARATOR DEVICE WITH ULTRASONIC WAVE	2023/02/03
2023/01416	GROOVING SAMPLING DEVICE FOR GEOLOGICAL TUNNELS	2023/02/03
2023/01417	NOVEL INTEGRATED LINEAR GEOLOGICAL OCCURRENCE MEASURING DEVICE	2023/02/03
2023/01418	GYROSCOPE-BASED INTEGRATED LINEAR GEOLOGICAL OCCURRENCE MEASURING DEVICE	2023/02/03
2023/01436	METHOD, DEPOT FACILITY AND SYSTEM FOR HANDOVER OF A PLURALITY OF PARCELS TO A PLURALITY OF RECIPIENTS AND/OR TO RECEIVE A LARGE NUMBER OF PARCELS FROM MULTIPLE DEPOSITORS	2023/02/03
2023/01464	PREPARATION AND APPLICATION OF PROBIOTIC FERTILIZER COATED WITH TRICHODERMA AND BACILLUS	2023/02/06
2023/01465	FOUNDATION PIT SLOPE PROTECTION AND REINFORCEMENT DEVICE FOR CIVIL ENGINEERING	2023/02/06
2023/01466	A CLEANING ROBOT FOR GLASS CURTAIN WALL OF HIGH-RISE BUILDINGS	2023/02/06

Application Number	Patent Title	Filing Date
2023/01467	SYNCHRONOUSLY REMOVE AND INSTALL SPLICE TYPE BUILDING TEMPLATES	2023/02/06
2023/01468	EASY TO OPERATE BUILDING TEMPLATE	2023/02/06
2023/01469	FOLDING BUILDING TEMPLATE	2023/02/06
2023/01470	MULTIFUNCTIONAL BUILDING WALL	2023/02/06
2023/01471	PREFABRICATED STEEL CONSTRUCTION WALL	2023/02/06
2023/01474	FOWL ADENOVIRUS 4 STRAIN, VACCINE, VACCINE COMPOSITION AND MULTI-COMBINED VACCINE THEREOF, AND APPLICATIONS OF FOWL ADENOVIRUS 4 STRAIN, VACCINE AND VACCINE COMPOSITION	2023/02/06
2023/01476	RETRIEVAL AND ANALYSIS METHOD, DEVICE AND MEDIUM FOR PRE-AUDIT INFORMATION OF ACADEMIC JOURNALS	2023/02/06
2023/01480	DEVICE AND METHOD FOR PREVENTING AND CONTROLLING SAPROLEGNIA BY OZONE IN RAINBOW TROUT FRY BREEDING PROCESS	2023/02/06
2023/01481	A HEAT SOURCE BODY REHABILITATION PHYSIOTHERAPY BELT FOR CERVICAL AND LUMBAR VERTEBRAE	2023/02/06
2023/01484	HIGH-EFFICIENCY FUEL ECONOMIZER FOR AUTOMOBILE ENGINES	2023/02/06
2023/01485	A CONSTRUCTION METHOD OF DUCK ENTERITIS VIRUS WITH ENVELOPE GLYCOPROTEIN GG GENE DELETION	2023/02/06
2023/01491	A COORDINATED HYBRID MICROGRID SYSTEM WITH QUASI-OPPOSITIONAL SELFISH-HERD OPTIMIZATION	2023/02/06
2023/01492	A METHOD FOR ANALYZING LESSOR KNOWN TRADITIONAL RECIPES	2023/02/06
2023/01493	A PROFICIENT FREQUENCY REGULATION SYSTEM FOR MICROGRID OPERATIONS	2023/02/06
2023/01495	A METHOD FOR TRANSLATION BY USING A SPEECH ASSISTED DICTIONARY AUTOMATION SYSTEM	2023/02/06
2023/01496	LIGHT SOURCE COMBINATION FOR TARGETED CORRECTION OF VISUAL DISEASES RELATED TO FORM SENSES, LIGHT SENSES AND COLOR SENSES AFTER EYE GENE SEQUENCING	2023/02/06
2023/01501	PREPARATION METHOD FOR EPOXY RESIN CLEANING ADHESIVE, AND APPLICATION THEREOF	2023/02/06
2023/01512	METHOD FOR ACCURATELY RETRIEVING AND POSITIONING PHOTOSENSITIVE FILM IMAGE INFORMATION	2023/02/07
2023/01513	METHOD FOR DETERMINING AGE OF GROUND WATER AFFECTED BY POLLUTION	2023/02/07
2023/01518	INTELLIGENT CONTROL METHOD FOR NONLINEAR VIBRATION OF PIEZOELECTRIC	2023/02/07

Application Number	Patent Title	Filing Date
	LAMINATED PLATES	
2023/01519	ANTI-CLOGGING SELF-CLEANING NEGATIVE PRESSURE DRAINAGE DEVICE	2023/02/07
2023/01522	A METHOD FOR DETECTING CANCEROUS CELLS IN ASYMPTOTIC PATIENTS USING MONOCLONAL ANTIBODY DRUGS	2023/02/07
2023/01552	PRIMER AND PROBE COMBINATION FOR SIMULTANEOUSLY DETECTING THREE COMPOSITIONS OF COARSE CEREALS, KIT AND METHOD	2023/02/08
2023/01553	RICE TRANSPLANTING DEVICE	2023/02/08
2023/01554	A METHOD FOR PREPARING SIC/TIO2 BASED PHOTOCATALYST BY USING WASTE SOLAR PHOTOVOLTAIC PANEL AND A PHOTOCATALYST	2023/02/08
2023/01555	A HEAVY METAL CONTENT IDENTIFICATION DEVICE FOR FOREST ECOLOGICAL SOIL	2023/02/08
2023/01556	A VIRTUAL SIMULATION METHOD BASED ON PLC	2023/02/08
2023/01557	INTELLIGENT DOCUMENT RETRIEVAL SYSTEM	2023/02/08
2023/01558	AN INTELLIGENT LIBRARY DATA MANAGEMENT SYSTEM	2023/02/08
2023/01559	ROOF WITH RAINWATER COLLECTION AND IRRIGATION STRUCTURE	2023/02/08
2023/01560	METHOD OF PREPARING A HIGH TOUGHNESS AND HIGH RESILIENCE SILANE CROSS-LINKED POLYETHYLENE MATERIAL	2023/02/08
2023/01561	A VISUAL SCENE RECOGNITION METHOD BASED ON DEEP LEARNING	2023/02/08
2023/01563	A CONVEYING DEVICE WITH DETECTION FUNCTION	2023/02/08
2023/01564	A STRENGTH TEST DEVICE FOR ENGINEERING INVESTIGATION	2023/02/08
2023/01565	A METAL BUILDING MATERIAL PROCESSING FORGING FRAME	2023/02/08
2023/01566	A TELESCOPIC GUARDRAIL	2023/02/08
2023/01567	A GEOTECHNICAL SAMPLING DEVICE	2023/02/08
2023/01568	A BRAZING MATERIAL FOR COPPER-ALUMINUM FLAME BRAZING, PREPARATION METHOD AND APPLICATION THEREOF	2023/02/08
2023/01571	METHOD FOR PREPARING ANTIOXIDATIVE EXTRACT OF FRUCTUS LYCII AND APPLICATION THEREOF	2023/02/08
2023/01574	INTELLIGENT LEASING MANAGEMENT SYSTEM FOR BOX-TYPE SUBSTATION EQUIPMENT AND WORKING METHOD THEREOF	2023/02/08
2023/01597	EMERGENCY WARNING AND ASSISTANCE PROVIDING SYSTEM AND METHOD	2023/02/08
2023/01598	SMART MULTIFUNCTIONAL KEY DOOR VIEWER BOX AND SYSTEM	2023/02/08
2023/01599	EMERGENCY RESCUE SYSTEM	2023/02/08

Application Number	Patent Title	Filing Date
2023/01611	DETECTION SYSTEM AND METHOD OF GREENHOUSE GAS EMISSIONS OF SEDIMENT AND WATER BODY	2023/02/09
2023/01612	A SPECIAL-SHAPED VERTICAL POLE	2023/02/09
2023/01613	RECYCLED AGGREGATE CONCRETE AND PREPARATION METHOD THEREOF	2023/02/09
2023/01614	SELF-BALANCING MANIPULATOR	2023/02/09
2023/01616	USE OF MICRO RIBONUCLEIC ACID (MIRNA) COMBINATION AS A BIOMARKER IN PREPARATION OF REAGENT OR KIT FOR DIAGNOSING LUNG CANCER AND/OR EVALUATING PROGNOSIS OF LUNG CANCER	2023/02/09
2023/01617	PHOTOCONVERSION AGING RESISTANT FOG-DROP RESISTANT POLYETHYLENE FILM AND PREPARATION METHOD THEREOF	2023/02/09
2023/01618	TRANSPARENT PET/PETG INFRARED ABSORPTION COMPOSITE MATERIAL, PREPARATION METHOD AND APPLICATION THEREOF	2023/02/09
2023/01619	THE INVENTION RELATES TO A LOW-COST BIODEGRADABLE FILM AND A PREPARATION METHOD THEREOF	2023/02/09
2023/01620	GREEN LOW CARBON BRIGHT COLOR POLYESTER COMPOSITE MATERIAL AND PREPARATION METHOD AND APPLICATION THEREOF	2023/02/09
2023/01621	DEVICE CAPABLE OF DETERMINING HEAVY METAL CONTENT OF ATMOSPHERIC DEPOSITION IN SEDIMENTS BY LAYERS	2023/02/09
2023/01622	A PEDESTAL PAN DEVICE FOR THE ELDERLY WITH BUFFER FUNCTION	2023/02/09
2023/01630	SUSTAINABLE ELECTRIC BUS BASED TRANSIT SYSTEM FOR MANAGING TRANSPORTATION AND SUPPLY POWER TO ELECTRIC BUSES	2023/02/09
2023/01631	A RAW MATERIAL PREPARATION DEVICE FOR MIXING CHROMIUM FREE ZINC ALUMINUM ANTI-CORROSION COATING FOR TRAFFIC STEEL COMPONENTS	2023/02/09
2023/01632	A HYBRID SYSTEM FOR CLASSIFICATION AND RETRIEVAL OF HYPERSPECTRAL IMAGES	2023/02/09
2023/01633	SOLID LIPID NANOPARTICLES FOR TARGETTED DRUG DELIVERY	2023/02/09
2023/01652	SPLICING STRUCTURE OF PREFABRICATED PIER	2023/02/10
2023/01662	PVC PIPE-CONFINED BASALT FIBER CONCRETE COLUMN AND PREPARATION METHOD THEREOF	2023/02/10
2023/01666	PREFABRICATED ASSEMBLED PIER WITH TENON-MORTISE CONNECTION	2023/02/10
2023/01712	INTERACTIVE PRACTICE ROBOT FOR MEMORIZING WORDS	2023/02/13
2023/01721	FLUIDIZED BED MEMBRANE REACTOR FOR	2023/02/13

Application Number	Patent Title	Filing Date
	METHANE AUTOTHERMAL REFORMING WITH INTEGRATED CO2 CAPTURE	
2023/01722	DESERT ECOLOGICAL ANALYSIS SYSTEM	2023/02/13
2023/01723	SEALING STRUCTURE	2023/02/13
2023/01727	EMERGENCY SUPPORT SYSTEM FOR SPECIAL VEHICLES BASED ON DIGITAL TWIN TECHNOLOGY	2023/02/13
2023/01761	A KIND OF RUBBER FLOOR PAVING TILE AND ITS PREPARATION METHOD	2023/02/14
2023/01762	PORTABLE CLINICAL PHARMACY DISPENSING DEVICE	2023/02/14
2023/01763	A KIND OF ROAD INORGANIC BONDED BASE MATERIAL ANTI-SCOURING TEST EQUIPMENT AND EVALUATION METHOD	2023/02/14
2023/01764	A ROAD COMPACTION UNIFORMITY DETECTION AND EVALUATION METHOD BASED ON PFWD	2023/02/14
2023/01765	DEVICE SUITABLE FOR SHORT-TERM ADHESIVE PERFORMANCE EXPERIMENT OF OLD TIMBER AND FRP SHEET	2023/02/14
2023/01767	METHOD FOR DISTINGUISHING QUERCUS VARIABILIS FROM QUERCUS ACUTISSIMA	2023/02/14
2023/01768	TREATMENT METHOD FOR IMPROVING REGENERATION EFFICIENCY OF QUERCUS ROBUR TISSUE CULTURE	2023/02/14
2023/01769	PREPARATION METHOD FOR DOUBLE-DRUG-LOADED CORE-SHELL STRUCTURE TYPE NANOFIBERS BASED ON ELECTROSTATIC SPINNING OF PICKERING EMULSION	2023/02/14
2023/01770	METHOD FOR DETERMINING TEMPERATURE FIELD OF SPIRAL BEVEL GEAR	2023/02/14
2023/01771	METHOD FOR JUDGING LARGE-SCALE PARTICIPATION OF OIL AND GAS IN SANDSTONE URANIUM MINERALIZATION BY INCLUSION H-O ISOTOPE	2023/02/14
2023/01773	SNP MARKER OF GP GENE AND ITS APPLICATION IN MACROBRACHIUM ROSENBERGII	2023/02/14
2023/01774	A NURSING ASSISTIVE DEVICES FOR CARDIOTHORACIC SURGERY	2023/02/14
2023/01775	HIGHLAND BARLEY MORINGA OLEIFERA HEALTH WINE AND PREPARATION METHOD THEREOF	2023/02/14
2023/01776	A METHOD FOR PREDICTING THE GENETIC RISK OF SEVERE ACUTE MOUNTAIN DISEASE FOR NON-DIAGNOSTIC PURPOSES	2023/02/14
2023/01777	A SPUTUM SUCTION NURSING DEVICE FOR RESPIRATORY MEDICINE	2023/02/14
2023/01778	A HEATING CHAIR FOR EMERGENCY TRADITIONAL CHINESE MEDICINE NURSING	2023/02/14
2023/01779	AN ADJUSTABLE THYROID POSITIONING	2023/02/14

Application Number	Patent Title	Filing Date
	PUNCTURE DEVICE	
2023/01780	TRAJECTORY TRACKING ALGORITHM FOR ASTEROID SURFACE SPACE EQUIPMENT BASED ON SPARROW SEARCH ALGORITHM	2023/02/14
2023/01781	A RAPID DISSOLVING DEVICE FOR OBSTETRICS AND GYNECOLOGY CLINICAL AGENTIA	2023/02/14
2023/01782	A LIMITING FIXATION AUXILIARY MECHANISM SUITABLE FOR LIVER TARGETED DRUG THERAPY	2023/02/14
2023/01783	A THORACIC SURGERY MEDICAL CARE DISK	2023/02/14
2023/01809	PAENIBACILLUS TERRAE STRAIN FOR CONTROLLING BOTRYTIS CINEREA OF PARIS POLYPHYLLA AND APPLICATION THEREOF	2023/02/15
2023/01810	FOUR-ECCENTRIC BUTTERFLY VALVE CONVENIENT TO REMOVE AND INSTALL	2023/02/15
2023/01812	HIGHLAND BARLEY ROSA LAEVIGATA HEALTH-CARE WINE AND PREPARATION METHOD	2023/02/15
2023/01813	METHOD FOR PREPARING NITROGEN-DOPED POROUS CARBON MATERIAL BY TAKING ZINC NITRATE AS ACTIVATOR	2023/02/15
2023/01814	PROTECTIVE THROWING NET FOR HIGH-RISE BUILDING	2023/02/15
2023/01816	A METHOD FOR COLLECTING SEEDS OF WINGED FRUIT SHRUBS AND ESTIMATING PRODUCTION	2023/02/15
2023/01817	THE STEEL PLATE BENDING MACHINE IS CONVENIENT TO ADJUST THE BENDING ANGLE	2023/02/15
2023/01818	PE RELEASE FILM PRODUCTION WITH THE WIND RING COOLING DEVICE	2023/02/15
2023/01819	THE COARSE TYPE CABLE FAST TRUNCATION EQUIPMENT	2023/02/15
2023/01820	ELECTROLYTIC CAPACITOR TRANSPORT DEVICE	2023/02/15
2023/01821	MULTI-PURPOSE CIRCUIT BREAKER	2023/02/15
2023/01822	STEEL STRUCTURE WELDING JIG	2023/02/15
2023/01823	THE PRODUCT STATIC IMAGE RECOGNITION DEVICE	2023/02/15
2023/01824	APPLICATION OF BACILLUS VELEZENSIS	2023/02/15
2023/01825	A METHOD OF PLANTING CROPS IN A NARROW-ROW SHRUB ECONOMIC PROTECTION FOREST	2023/02/15
2023/01826	SAND BARRIER FOR ECOLOGICAL RESTORATION AND DESERTIFICATION CONTROL	2023/02/15
2023/01827	A KIND OF CHINESE PATENT MEDICINE FOR TREATING VOCAL CORD LEUKOPLAKIA	2023/02/15
2023/01828	METHOD FOR TESTING EARLY PREGNANCY OF FEMALE SIBERIAN TIGERS AFTER MATING	2023/02/15
2023/01829	METHOD FOR BREEDING NEW BARLEY	2023/02/15

Application Number	Patent Title	Filing Date
	VARIETIES BY CHEMICAL MUTATION	
2023/01830	TRADITIONAL CHINESE MEDICINE PRODUCT SUITABLE FOR MEN TO IMPROVE IMMUNITY AND KILL CORONAVIRUS	2023/02/15
2023/01831	VULCANIZED RUBBER RECYCLED RUBBER AND MANUFACTURING PROCESS THEREOF	2023/02/15
2023/01832	CEMENT MORTAR GENERATING EQUIPMENT	2023/02/15
2023/01833	SPLICE TYPE PARTITION WALL	2023/02/15
2023/01834	BUILDING CURTAIN WALLS THAT ARE EASY TO CLEAN	2023/02/15
2023/01835	THE STORAGE RACK OF THE DIGITAL TUBE	2023/02/15
2023/01836	ANTENNA AUXILIARY STRUCTURE	2023/02/15
2023/01837	HIGH STRENGTH ALUMINUM CLAD STEEL CURTAIN WALL	2023/02/15
2023/01838	A MATERNITY, INFANT AND CHILD PRODUCT PACKAGING TABLE WITH A GUIDING MECHANISM	2023/02/15
2023/01839	METHOD FOR EXTRACTING POLYSACCHARIDE FROM STROPHARIA RUGOSOANNULATA	2023/02/15
2023/01840	A SYSTEM FOR COMPOSITE WAVEFORM OF (GAUSSIAN AND RAYLEIGH) DISTRIBUTION FOR NLFM GENERATION AND METHOD THEREOF	2023/02/15
2023/01841	AN ANTI-CANCER HDAC INHIBITOR TO TARGET ALZHEIMER'S DISEASE BY INHIBITING HUMAN MMP-13 AND GLUTATHIONE S-TRANSFERASE	2023/02/15
2023/01843	A SOIL SLOPE ECOLOGICAL RESTORATION SYSTEM	2023/02/15
2023/01844	A POWDER AND METHOD FOR PREPARING HIGH HARDNESS CO-BASED COATING ON STAINLESS STEEL SURFACE	2023/02/15
2023/01845	A METHOD FOR MATHEMATICAL MODELING OF THE RESPONSES OF FOCUS GROUP PARTICIPANTS	2023/02/15
2023/01846	A METHOD FOR PERFORMING EFFICIENT SCHEDULING FOR MULTI-INPUT MULTI-OUTPUT SYSTEM USING BINARY FLOWER POLLINATION ALGORITHM	2023/02/15
2023/01847	A PROCESS OF PREPARING ORGANIC LIME-GGBS MORTARS USING ORGANIC FERMENTED WATER AND ITS COMPOSITION THEREOF	2023/02/15
2023/01848	A DIELECTRIC SPECTROSCOPY SENSOR SYSTEM FOR MEASURING LIQUID DIELECTRIC CONSTANT	2023/02/15
2023/01872	IMPROVEMENTS IN PIPELINE NETWORKS	2023/02/15
2023/01876	FREEZE-THAW DEVICE FOR GERM CELLS AND EMBRYOS AND ITS USE METHOD	2023/02/16
2023/01877	METHOD FOR CULTURING PRIMARY MUSCLE CELLS OF COILIA NASUS	2023/02/16

Application Number	Patent Title	Filing Date
2023/01880	SLUDGE RECYCLING AND UTILIZING DEVICE	2023/02/16
2023/01881	METHOD FOR PREPARING PROTEASE WITH ANTIBACTERIAL ACTIVITY AND APPLICATION THEREOF	2023/02/16
2023/01882	WATER-SAVING AND DROUGHT-RESISTANT DEVICE FOR AGRICULTURE	2023/02/16
2023/01884	SLUDGE INTEGRATED TREATMENT DEVICE	2023/02/16
2023/01885	BRIDGE SUPPORT ADJUSTING DEVICE FOR BRIDGE CONSTRUCTION	2023/02/16
2023/01886	BEARING ASSEMBLY DEVICE	2023/02/16
2023/01887	A SOIL LOSS MONITORING DEVICE	2023/02/16
2023/01888	STEEL PIPE COMPOSITE COLUMN AND CONSTRUCTION METHOD THEREOF	2023/02/16
2023/01891	CLOTHES WASHING AND DRYING DEVICE AND METHOD WITH SELF-ADAPTIVE REGULATION FUNCTION	2023/02/16
2023/01892	AN IMAGE RECOGNITION METHOD BASED ON CNN FUZZY EVALUATION	2023/02/16
2023/01893	OIL-WATER SEPARATION MATERIAL, PREPARATION METHOD AND APPLICATION THEREOF	2023/02/16
2023/01894	A VR HEART RATE INTELLIGENT DETECTION DEVICE	2023/02/16
2023/01895	METHOD FOR RAPIDLY IDENTIFYING EARLY MATURITY OR EXTRA-EARLY MATURITY OF BRASSICA NAPUS	2023/02/16
2023/01896	A NEW SMART HEALTH MULTI-FUNCTIONAL PILLOW	2023/02/16
2023/01897	TWO-SIDED MATCHING DECISION METHOD OF ELECTRICITY SALES PACKAGE BASED ON DISAPPOINTMENT THEORY	2023/02/16
2023/01898	METHOD AND DEVICE FOR INTEGRATED ENERGY DEMAND FORECASTING OF THE PARK BASED ON THE TRANSFORMER ALGORITHM	2023/02/16
2023/01899	A SOIL AND WATER CONSERVATION ECOLOGICAL TREATMENT SYSTEM IN THE RARE EARTH TAILINGS AREA	2023/02/16
2023/01900	A NON-INPUT SELF-COMMUTATION DRYING TYPE SECRETARIAL DATA SORTING MACHINE	2023/02/16
2023/01901	A COMPREHENSIVE DETECTION DEVICE FOR INTERIOR ECOLOGICAL ENVIRONMENT OF FOREST	2023/02/16
2023/01902	A PREPARATION METHOD OF CIGAR-FLAVORED PIPE TOBACCO	2023/02/16
2023/01903	A NEW TYPE OF ECOLOGICAL GRASSED WATERWAY	2023/02/16
2023/01904	A DIGITAL PAYMENT SYSTEM FOR TRANSACTION OF MONEY THROUGH FACE RECOGNITION AND METHOD THEREOF	2023/02/16
2023/01908	A HANDY OBSTACLES DETECTION SMART STICK	2023/02/16

Application Number	Patent Title	Filing Date
2023/01909	METHOD AND SYSTEM FOR CALCULATING RIVERWAY WIDTH BASED ON SATELLITE IMAGES	2023/02/16
2023/01910	FOLIAR FERTILIZER AND ITS APPLICATION METHOD FOR REDUCING CADMIUM ACCUMULATION IN RICE AND INCREASING YIELD	2023/02/16
2023/01943	OPEN-CELL POLYVINYL FORMAL FOAM MATERIAL AND PREPARATION METHOD THEREOF	2023/02/17
2023/01944	MULTIFUNCTIONAL INTERNET OF THINGS SOCKET	2023/02/17
2023/01946	INTELLIGENT AGRICULTURAL BAIT AUTOMATIC FEEDING ROBOT	2023/02/17
2023/01948	AN APPARATUS AND METHOD FOR THE PREPARATION OF ALLOY NANOPARTICLES WITH TUNABLE PARAMETERS	2023/02/17
2023/01949	DIFFERENTIAL PROTEIN COMBINATION FOR ACUTE STROKE AND APPLICATION AND ANALYSIS METHOD THEREOF	2023/02/17
2023/01950	MOBILE MICRO NANO BUBBLES GENERATOR	2023/02/17
2023/01951	PHOTOCATALYSIS-BASED DRINKING WATER DISINFECTION DEVICE AND DISINFECTION PROCESS	2023/02/17
2023/01952	AN EARLY WARNING DEVICE FOR DIGGING GROOVE OF MILLING MACHINE	2023/02/17
2023/01953	APPARATUS AND METHOD FOR DETECTING SHAPE PARAMETER OF ULTRAMICRO GLUE DROPLET BASED ON MACHINE VISION	2023/02/17
2023/01954	ELECTRODE COMPOSITE MATERIAL OF FLEXIBLE SUPERCAPACITOR, AND PREPARATION METHOD THEREFOR	2023/02/17
2023/01955	MICRO-NANO STRUCTURE LAYER AND METHOD FOR IMPROVING BONDING FORCE BETWEEN FLUORINATED DIAMOND-LIKE CARBON FILM AND STEEL SUBSTRATE	2023/02/17
2023/01956	PHOTOCATALYTIC COMPOSITE FILM, AND PREPARATION METHOD AND APPLICATION THEREOF	2023/02/17
2023/01957	POROUS CU-SIC COMPOSITE FILM AND PREPARATION METHOD THEREFOR	2023/02/17
2023/01958	THREE-COMPONENT VISIBLE-LIGHT PHOTOCATALYTIC NANOCOMPOSITE AND PREPARATION METHOD THEREOF	2023/02/17
2023/01960	METHOD FOR MEASURING AND CALCULATING THE FRACTAL DIMENSION OF ROCK CONCRETE MATERIALS BASED ON ACOUSTIC EMISSION TIME SERIES	2023/02/17
2023/01961	SUPPORT DEVICE AND CONSTRUCTION METHOD FOR CAST-IN-PLACE PILES IN KARST CAVE AREAS	2023/02/17
2023/01962	AUTONOMOUS CONTRAST TYPE	2023/02/17

Application Number	Patent Title	Filing Date
	REHABILITATION EXERCISE DEVICE FOR ELDERLY NURSING	
2023/01963	LOW POLYLACTIC ACID, PREPARATION METHOD AND APPLICATION THEREOF	2023/02/17
2023/01964	WEARABLE BLOOD PRESSURE DETECTION BRACELET	2023/02/17
2023/01965	A QUANTITATIVE METHOD OF BEARING CAPACITY OF LIMESTONE ROOF OF CONCEALED KARST CAVE	2023/02/17
2023/01966	A CHEESE STRETCH-FORMING DEVICE OF CHEESE FORMING MACHINE	2023/02/17
2023/01967	MELTING POT EQUIPMENT FOR CHEESE POWDER PROCESSING	2023/02/17
2023/01968	AN ORAL DRUG FEEDER FOR CANCER PATIENTS	2023/02/17
2023/01971	A SOIL AND WATER CONSERVATION SAND SETTLING TANK FOR SMALL WATERSHED TREATMENT	2023/02/17
2023/01972	A SOIL SAMPLE SAMPLER FOR RIVER, LAKE AND RESERVOIR WATERFRONT ZONE	2023/02/17
2023/01974	A PREPARATION METHOD OF CIGAR-FLAVORED CHEWING TOBACCO	2023/02/17
2023/01978	A 3D-PRINTED ORTHOPEDIC SUPPORT DEVICE FOR CHILDREN'S LOWER EXTREMITY TORSION DEFORMITY	2023/02/17
2023/01979	IMAGE RECOGNITION DEVICE BASED ON DIGITAL TWIN TECHNOLOGY	2023/02/17
2023/01981	PH-SENSITIVE POLYELECTROLYTE COMPLEX COMPOSITION FOR SUSTAINED DELIVERY OF ACID-SUSCEPTIBLE DRUGS AND ITS PREPARATION METHOD THEREOF	2023/02/17
2023/02007	METHOD FOR PLANTING SOYBEAN IN SALINE-ALKALI SOIL	2023/02/20
2023/02008	POST CLEANING METHOD FOR N-TYPE CRYSTALLINE SILICON PASSIVATED CONTACT CELL	2023/02/20
2023/02009	FRONT SURFACE PASSIVATION PROCESS MATCHED WITH ALKALINE POLISHING SELECTIVE EMITTER	2023/02/20
2023/02010	NEW BACK ETCHING METHOD FOR CRYSTALLINE SILICON CELL	2023/02/20
2023/02011	NEW BACK PASSIVATION PROCESS FOR BIFACIAL CRYSTALLINE SILICON CELL	2023/02/20
2023/02012	UNIVERSITY TALENT CULTIVATION METHOD BASED ON EXTENSION DATA MINING	2023/02/20
2023/02013	ALKALOID MOLECULARLY IMPRINTED POLYMER AND ITS PREPARATION METHOD AND APPLICATION	2023/02/20
2023/02014	MULTIFUNCTIONAL TEACHING DESK FOR MENTAL HEALTH EDUCATION	2023/02/20
2023/02015	SUSTAINED-RELEASE PREPARATION FOR TREATING SYSTEMIC LUPUS	2023/02/20

Application Number	Patent Title	Filing Date
	ERYTHEMATOSUS	
2023/02016	DOUBLE-BASE NANO VISCOSITY REDUCER FOR HEAVY OIL AND EXPLOITATION METHOD THEREOF	2023/02/20
2023/02017	A PORTABLE ENGLISH TEACHING BOARD	2023/02/20
2023/02018	A PRESCRIPTION FOR TREATING THE PROSTATE	2023/02/20
2023/02019	A CLASSIFICATION SYSTEM AND METHOD OF HERICIUM ERINACEUS BASED ON MACHINE VISION	2023/02/20
2023/02020	A CREATIVE TRAINING CARD FOR TRAINING WRITING THOUGHT	2023/02/20
2023/02021	AN ELECTRONIC TRANSLATOR DEVICE	2023/02/20
2023/02022	AN INTELLIGENT PLAYBACK SPEAKER FOR TEACHING	2023/02/20
2023/02023	AN AUTO-WIPING WHITEBOARD FOR ENGLISH TEACHING	2023/02/20
2023/02024	AN INTERACTIVE TEACHING DEVICE FOR ENGLISH TEACHING	2023/02/20
2023/02025	AN ENGLISH TEACHING SCRIBER DEVICE	2023/02/20
2023/02026	A DEVICE FOR DISPLAYING LITERARY WORKS	2023/02/20
2023/02027	A CONVERSATION TRAINING DEVICE FOR ENGLISH TEACHING	2023/02/20
2023/02028	A DEVICE FOR DISPLAYING LITERARY WORKS	2023/02/20
2023/02029	MECHANICAL MECHANISM	2023/02/20
2023/02030	A VIBRATING SPINE REHABILITATION BED	2023/02/20
2023/02031	A PROCESS METHOD FOR IMPROVING THE PROPERTIES OF GRADIENT ALLOY STEEL BY LASER MELTING DEPOSITION	2023/02/20
2023/02032	A METHOD OF LASER CLADDING WEAR-RESISTANT HIGH ENTROPY ALLOY COATING DOPED WITH RARE EARTH ELEMENTS ON STAINLESS STEEL SURFACE	2023/02/20
2023/02033	A MATERIAL AND METHOD FOR PREPARING CORROSION-CAVITATION-RESISTANT MODIFIED INCONEL 625 COATING	2023/02/20
2023/02034	A 3D PRINTING METHOD FOR COMPOSITE MATERIAL DIRECT INK WRITING WITH CONTROLLABLE REINFORCEMENT PHASE ARRANGEMENT	2023/02/20
2023/02035	METHOD FOR IMPROVING LAND UTILIZATION RATE OF MACADAMIA SPP. FOREST	2023/02/20
2023/02036	SPECIAL PUBLICITY DEVICE FOR DRAMA CLUB	2023/02/20
2023/02037	PHARMACEUTICAL EXPERIMENT SAMPLING DEVICE	2023/02/20
2023/02038	METAL-ORGANIC FRAMEWORKS-DYSPROSIUM COMPLEX, PREPARATION METHOD AND APPLICATION THEREOF	2023/02/20
2023/02039	SCALPEL CLEANING DEVICE FOR OPHTHALMIC SURGERY	2023/02/20
2023/02040	ELECTROMAGNETIC FORMING DEVICE AND	2023/02/20

Application Number	Patent Title	Filing Date
	ELECTROMAGNETIC FORMING METHOD	
2023/02041	A HERNIA SAC RETURNING AND OCCLUDING DEVICE	2023/02/20
2023/02042	DEVICE FOR MONITORING SOIL MOISTURE IN COTTON FIELD	2023/02/20
2023/02043	MANGROVE PHENOLOGY MONITOR CAMERA AND METHOD	2023/02/20
2023/02044	CHINESE CHESTNUT OPENING MACHINE	2023/02/20
2023/02045	SKIN CARE COMPOSITION CONTAINING PAEONIA DELAVAYI SEED OIL AND PREPARATION METHOD THEREOF	2023/02/20
2023/02046	A KIND OF EXHAUST GAS PURIFICATION DEVICE FOR TUNNEL CONSTRUCTION MACHINERY	2023/02/20
2023/02047	PESTICIDE SPRAYING DEVICE FOR AGRICULTURAL CULTIVATION	2023/02/20
2023/02048	GARDENIA FACIAL MASK AND PREPARATION METHOD THEREOF	2023/02/20
2023/02049	A KIND OF ELEVATION DETECTION ALARM DEVICE FOR PILE FOUNDATION CONCRETE INFILL	2023/02/20
2023/02050	A SIX-DEGREE-OF-FREEDOM PLATFORM BASED ON RV REDUCER	2023/02/20
2023/02051	A 3D PRINTING HOLDER THAT FACILITATES THE SEPARATION OF THE HOLDER FROM THE PRINTED PRODUCT	2023/02/20
2023/02052	A KIND OF REDUCER TEST PLATFORM	2023/02/20
2023/02054	CHEMICAL REAGENT DRYING DEVICE FOR CHEMICAL EXPERIMENT	2023/02/20
2023/02055	A PRECAST METHOD COMBINING LONG-LINE AND SHORT-LINE FOR SEGMENTAL ERECTION CONTINUOUS BEAM	2023/02/20
2023/02056	PROTECTIVE DEVICE FOR KIDDING	2023/02/20
2023/02057	WATER-AND-AIR ROBOT WITH INTEGRATED PROPULSION DEVICE	2023/02/20
2023/02058	METHOD FOR PREPARING INDUSTRIAL-GRADE VANADIUM-DOPED UNHYDROUS SINGLE-CRYSTAL NOBLE SPINEL	2023/02/20
2023/02059	METHOD FOR PREPARING TITANIUM-DOPED UNHYDROUS SINGLE-CRYSTAL HERCYNITE UNDER HIGH-TEMPERATURE AND HIGH-PRESSURE CONDITION	2023/02/20
2023/02063	A SIDE CANTILEVER-TYPED ANTI-SLIDE PILE REINFORCING STRUCTURE	2023/02/20
2023/02064	A SYSTEM FOR DEVELOPMENT OF A BULLET SHAPED NANOFIBER COATED BIO-ROBOT FOR TARGETED DRUG DELIVERY	2023/02/20
2023/02065	A SYSTEM AND METHOD TO PREDICT SURFACE RUNOFF BY SUPPORT VECTOR MACHINE- SALP SWARM APPROACH	2023/02/20
2023/02066	AN ATHLETE TRACKING SYSTEM	2023/02/20
2023/02068	A PROCESS FOR PREPARING 5-NITRO-	2023/02/20

Application Number	Patent Title	Filing Date
	SALICYLIC ACID USING A SIMPLE REACTION VESSEL AND ITS COMPOSITION THEREOF	
2023/02069	A COMPOSITION AND A METHOD FOR PREPARING A GEOPOLYMER CONCRETE MIX DESIGN	2023/02/20
2023/02070	AN EXTRACTION PROCESS OF BORASSUS FLABELLIFER L. LEAF FINE FIBER	2023/02/20
2023/02098	A TWO-DIMENSIONAL ELECTRICAL PROSPECTING METHOD	2023/02/21
2023/02099	A THREE-DIMENSIONAL ELECTRICAL PROSPECTING METHOD	2023/02/21
2023/02100	TRADITIONAL CHINESE MEDICINE COMPOSITION FOR TREATING PRURITIC DISEASE AND APPLICATION THEREOF	2023/02/21
2023/02101	METHOD FOR PREPARING HIGH-SPECIFIC-SURFACE-AREA SULFUR-DOPED CARBON MATERIAL FROM POTASSIUM 3-SULPHONATOPROPYL ACRYLATE	2023/02/21
2023/02102	METHOD FOR PREPARING HIGH-SPECIFIC-SURFACE-AREA NITROGEN-DOPED CARBON MATERIAL FROM POTASSIUM PHTHALIMIDE	2023/02/21
2023/02103	METHOD FOR PREPARING NITROGEN-DOPED CARBON NANOSPHERE WITH ULTRAHIGH SPECIFIC SURFACE AREA	2023/02/21
2023/02104	HEMOSTATIC DEVICE	2023/02/21
2023/02105	PREPARATION METHOD AND PREPARATION DEVICE OF FLAME-RETARDANT FABRIC	2023/02/21
2023/02106	A GRASPING CONTROL METHOD OF MINE BELT CONVEYOR BASED ON VISUAL POSITIONING	2023/02/21
2023/02107	ECOLOGICAL REVETMENT COMPONENT SUITABLE FOR WATER ENVIRONMENT MANAGEMENT IN SMALL WATERSHEDS	2023/02/21
2023/02108	A CHINESE MEDICINE PILL FOR THE TREATMENT OF RESTENOSIS AFTER STENT IMPLANTATION AND ITS PREPARATION METHOD	2023/02/21
2023/02109	A DIGITAL THERMOMETER BASED ON AT89C51 MICROCONTROLLER CONTROL	2023/02/21
2023/02110	METHOD FOR ARTIFICIALLY SIMULATING SALINE-ALKALI ENVIRONMENT BY USING SALINE-ALKALI GRADIENT	2023/02/21
2023/02111	INTELLIGENT JUDGING DEVICE FOR FIGHTING COMPETITIONS	2023/02/21
2023/02113	SYSTEM AND METHOD FOR IDENTIFYING AIRPORT RUNWAY CRACKS BASED ON MACHINE VISION	2023/02/21
2023/02114	METHOD FOR IDENTIFYING HIGH YIELD AND LOW EMISSION OF RICE VARIETY	2023/02/21
2023/02115	ELECTRIC HEATING DEVICE	2023/02/21
2023/02116	METHOD FOR PREPARING ULTRA-HIGH PURITY SODIUM HYDROXIDE REAGENT FROM	2023/02/21

Application Number	Patent Title	Filing Date
	INDUSTRIAL FLAKE ALKALI BY ELECTRODIALYSIS METHOD	
2023/02117	BACTERIOSTATIC MULCHING FILM AND PREPARATION METHOD THEREOF	2023/02/21
2023/02118	METHOD FOR INCREASING DESILICIFICATION RATE OF HIGH-SILICA WASTE SLAG	2023/02/21
2023/02120	METHOD FOR MEASURING IONIC CONDUCTIVITY OF OXYGEN ION-ELECTRON MIXED CONDUCTOR MATERIAL	2023/02/21
2023/02121	METHOD FOR PREPARING ULTRAFINE ALUMINUM OXIDE-CHROMIUM OXIDE OR ALUMINUM OXIDE AND CHROMIUM OXIDE FROM ALUMINUM CHROMIUM SLUDGE	2023/02/21
2023/02122	ACIDIC SENSITIVE LIPOSOME PREPARATION CO-LOADED WITH SODIUM NEW HOUTTUYFONATE AND CISPLATIN AND PREPARING METHOD THEREFOR	2023/02/21
2023/02123	A DUCTILE SEISMIC SYSTEM OF UNDERGROUND STRUCTURES WITH DAMPERS AND ISOLATION BEARINGS	2023/02/21
2023/02124	INVERSE-SQUARE-ROOT-ACCELERATION METHOD FOR PREDICTING LANDSLIDE TIME	2023/02/21
2023/02125	LARGE NIOBIUM-CONTAINING HOT-ROLLED H-SECTION STEEL WITH A LOW YIELD RATIO OF 355MPA AND ITS PRODUCTION METHOD	2023/02/21
2023/02126	MEDICINE FOR PREVENTING AND/OR TREATING CONGENITAL SYPHILIS	2023/02/21
2023/02127	PHOTOPYROLYSIS ADHESIVE DOPED WITH TITANIUM TRIOXIDE NANOPARTICLES AND PREPARATION METHOD THEREOF	2023/02/21
2023/02128	CROSS-BORDER ELECTRONIC COMMERCE QUOTATION SYSTEM AND METHOD	2023/02/21
2023/02129	TISSUE CULTURE METHOD FOR PLUMBAGO AURIOLATA F. ALBA	2023/02/21
2023/02130	CARGO DISTRIBUTION DISPATCHING APPARATUS FOR CROSS-BORDER ELECTRONIC COMMERCE	2023/02/21
2023/02132	METHOD FOR PREPARING CHROMIUM-DOPED UNHYDROUS SINGLE-CRYSTAL GALAXITE UNDER HIGH-TEMPERATURE AND HIGH-PRESSURE CONDITION	2023/02/21
2023/02133	METHOD FOR PREPARING COBALT-DOPED UNHYDROUS SINGLE-CRYSTAL GAHNITE UNDER HIGH-TEMPERATURE AND HIGH-PRESSURE CONDITION	2023/02/21
2023/02137	AN ANESTHETIC INJECTION DEVICE	2023/02/21
2023/02138	A MAGNETIC FLAP LEVEL GAUGE WITH AUTOMATIC DETECTION AND CORRECTION IN LOW TEMPERATURE ENVIRONMENT	2023/02/21
2023/02139	A SELF-BALANCING MAGNETIC FLOAT SYSTEM	2023/02/21
2023/02140	AN INTELLIGENT LIBRARY AND INFORMATION	2023/02/21

Application Number	Patent Title	Filing Date
	MANAGEMENT DEVICE	
2023/02141	LIGHTING DEVICE BASED ON INTERNET OF THINGS, AND CONTROL METHOD THEREOF	2023/02/21
2023/02143	A MATERIAL AND TECHNICAL METHOD USED FOR CORROSION-RESISTANT MODIFIED NICKEL-ALUMINUM BRONZE ALLOY COATING	2023/02/21
2023/02144	THE POWDER AND TECHNICAL METHOD USED IN LASER SURFACE HIGH ENTROPY ALLOYING OF COCRFENIMNTIX COATINGS	2023/02/21
2023/02181	METHOD FOR PREPARING CHILLI SEED OIL AND CHILLI SEED DIETARY FIBERS	2023/02/22
2023/02187	A GAS COOKER SWITCH WITH AUTOMATIC SHUTDOWN FUNCTION	2023/02/22
2023/02198	A COMPUTER DATA PROCESSING DEVICE BASED ON BIG DATA	2023/02/22
2023/02201	A METHOD FOR EVALUATING MEAT QUALITY TRAITS OF SHEEP BY BIA METHOD	2023/02/22
2023/02208	METHOD FOR PREPARING MANGANESE-DOPED AND HIGH-WATER SINGLE-CRYSTAL TREVORITE UNDER HIGH-TEMPERATURE AND HIGH-PRESSURE CONDITION	2023/02/22
2023/02209	METHOD FOR PREPARING CALCIUM-DOPED AND HIGH-WATER SINGLE-CRYSTAL FRANKLINITE UNDER HIGH-TEMPERATURE AND HIGH-PRESSURE CONDITION	2023/02/22
2023/02217	PROBIOTICS POWDER FOR CATS AND PREPARATION METHOD THEREFOR AND APPLICATION THEREOF	2023/02/22
2023/02230	A DETECTION KIT FOR DETECTING EGG ALBUMIN IN SURIMI PRODUCT AND ITS DETECTION METHOD	2023/02/22
2023/02231	A METHOD FOR MINE FIRE ESCAPE ROUTE	2023/02/22
2023/02233	TEMPERATURE-SENSITIVE BURST CYTODERM INHIBITOR FOR PHASE CHANGE MATERIAL AND ITS PREPARATION METHOD	2023/02/22
2023/02236	AN ADJUSTABLE ANTI-LEAKAGE THROAT COVER DEVICE FOR ANESTHESIOLOGY DEPARTMENT	2023/02/22
2023/02242	A METHOD FOR MINIMIZING RESIDUAL SOLVENT IN POLYMERIC COATINGS	2023/02/22
2023/02243	A COMPOSITION AND METHOD FOR PREPARING GLIPIZIDE MATRIX TABLET AND EVALUATING EFFICIENCY OF PLASTIC POLYMER	2023/02/22
2023/02244	A MALWARE DETECTION SYSTEM USING DEEP LEARNING AND MACHINE LEARNING	2023/02/22
2023/02245	THE INVENTION RELATES TO A GYNECOLOGICAL GEL AS WELL AS A PREPARATION METHOD AND APPLICATION THEREOF	2023/02/22
2023/02246	A PROCESS TO PREPARE EFFERVESCENT TABLETS OF FAMOTIDINE AND A	2023/02/22

Application Number	Patent Title	Filing Date
	COMPOSITION FOR THE SAME	
2023/02247	AN INTEGRATED RIVER AND LAKE ECOLOGICAL WATER DEMAND ACCOUNTING METHOD ORIENTED IN THE FUNCTION EXERTION OF THE TRANSITION ZONE	2023/02/22
2023/02248	A SYSTEM FOR REAL-TIME FACE MASK DETECTION, HEALTH CHECK, AND SANITIZATION	2023/02/22
2023/02249	PREDICTION METHOD AND SYSTEM OF VISUAL SALIENCY IN COMPLEX TRAFFIC	2023/02/22
2023/02250	A SYNTHETIC MULTI-GENE CONSTRUCT FOR THE CO-EXPRESSION OF ALCOHOL DEHYDROGENASE 1 (ADH1), 2-DEOXY-D-RIBOSE-5-PHOSPHATE ALDOLASE (DERA), AND 2-ENOATE REDUCTASE	2023/02/22
2023/02251	ELECTRIC FOUR-MAIN-BRANCH BENDING ANGLE SHAPER FOR FRUIT TREE SAPLINGS	2023/02/22
2023/02252	A SMART CROP RECOMMENDATION SYSTEM AND METHOD USING MACHINE LEARNING	2023/02/22
2023/02253	THREE-MAIN-BRANCH BENDING ANGLE SHAPER FOR FRUIT TREE SAPLINGS	2023/02/22
2023/02254	ELECTROCHEMICAL WATER TREATMENT SYSTEM FOR ELECTROLYTIC TANK	2023/02/22
2023/02255	PREPARATION AND CATALYTIC APPLICATION METHOD OF NANO COMPOSITE POWDER	2023/02/22
2023/02256	ENVIRONMENTAL-FRIENDLY WASTEWATER TREATMENT DEVICE	2023/02/22
2023/02257	TREATMENT DEVICE FOR OIL-CONTAINING SOLID WASTE	2023/02/22
2023/02258	UNDERWATER DEPTH-CONTROLLABLE SOIL SAMPLER	2023/02/22
2023/02259	BIOLOGICAL DESULFURIZATION DEVICE FOR BIOGAS AND DESULFURIZATION METHOD	2023/02/22
2023/02260	A ZERO ENERGY COOL CHAMBER SYSTEM	2023/02/22
2023/02261	A CASCADE NETWORK SYSTEM FOR CLASSIFICATION OF RICE GRAIN	2023/02/22
2023/02262	METHOD FOR SYNTHESIZING POTENTIAL THERAPEUTIC AGENTS FOR TREATING L-NAME-INDUCED HYPERTENSION AND EVALUATING ITS EFFECT THEREOF	2023/02/22
2023/02263	A METHOD FOR ULTRA-FAST FORMATION OF CRO2 AT AMBIENT CONDITIONS	2023/02/22
2023/02297	RADIX ET RHIZOMA NARDOSTACHYOS AND SEMEN ZIZIPHI SPINOSAE SOUND SLEEP GRANULES	2023/02/23
2023/02298	METHOD FOR IMPROVING BAKING QUALITY OF YUEYAN 1 TOBACCO LEAVES	2023/02/23
2023/02299	DATA ACQUISITION DEVICE, EVAPOTRANSPIRATION MONITORING SYSTEM AND EVAPOTRANSPIRATION MONITORING METHOD	2023/02/23
2023/02300	A RANDOM NOISE ANALYSIS METHOD BASED	2023/02/23

Application Number	Patent Title	Filing Date
	ON SEQUENCE PLANNING SAMPLING POINT TECHNIQUE	
2023/02301	THE PREPARATION METHOD OF A FLEXIBLE CONDUCTIVE GEL WITH ANISOTROPIC STRUCTURES AS SENSING PATCH AND ITS APPLICATIONS	2023/02/23
2023/02311	PHARMACEUTICAL COMPOSITION FOR ELIMINATING PARALYSIS AND ANALGESIA AND PREPARATION METHOD THEREOF	2023/02/23
2023/02314	METHOD FOR FERTILIZING FLUE-CURED TOBACCO IN SANDY SOIL FIELD	2023/02/23
2023/02321	A FREQUENCY MODULATION METHOD FOR CONTROLLING THE ENERGY STORAGE OUTPUT	2023/02/23
2023/02324	TRADITIONAL CHINESE MEDICINE COMPOSITION FOR TREATING DIABETIC GASTROPARESIS AND PREPARATION METHOD THEREOF	2023/02/23
2023/02325	A KIND OF SCREW FEEDING DEVICE FOR SLURRY SPRAYING MACHINE	2023/02/23
2023/02326	A MATERIAL HANDLING DEVICE FOR UNDERGROUND ROADWAY	2023/02/23
2023/02327	METHOD FOR LAYING FILTER PAPER ON CULTURE DISH	2023/02/23
2023/02332	AN AUTOMATIC RETURN AND SORTING DEVICE FOR SMART LIBRARY	2023/02/23
2023/02333	AN ADJUSTABLE BOOKSHELF IN THE LIBRARY	2023/02/23
2023/02334	A HOT COMPRESS MASSAGE DEVICE FOR STOMACH	2023/02/23
2023/02341	CIRCULATING HULLING DEVICE FOR PRODUCING BUCKWHEAT TEA	2023/02/23
2023/02342	WINE MECHANICAL PRODUCTION LINE	2023/02/23
2023/02353	COMPREHENSIVE MANAGEMENT METHOD FOR SPARTINA ALTERNIFLORA	2023/02/23
2023/02354	SPIDER MONKEY OPTIMIZATION-BASED GLOBAL MAXIMUM POWER TRACKING FOR PV SYSTEMS	2023/02/23
2023/02357	A DETECTION SYSTEM AND METHOD FOR CHICKEN TENDERS OF FEATHERING CONDITION BASED ON MACHINE VISION TECHNIQUE	2023/02/23
2023/02358	A PEDAL OPERATED INTEGRATED POTATO PEELING AND SLICING MACHINE	2023/02/23
2023/02360	SYSTEM FOR REMOTE MONITORING OF HIGH-RISK PATIENTS USING ARTIFICIAL INTELLIGENCE	2023/02/23
2023/02361	METHOD FOR PREPARING ALUMINUM-DOPED AND HIGH-WATER SINGLE-CRYSTAL CHROMITE UNDER HIGH-TEMPERATURE AND HIGH-PRESSURE CONDITION	2023/02/23
2023/02362	METHOD FOR PREPARING TITANIUM-DOPED AND HIGH-WATER SINGE-CRYSTAL	2023/02/23

Application Number	Patent Title	Filing Date
	MAGNOCHROMITE UNDER HIGH-TEMPERATURE AND HIGH-PRESSURE CONDITION	
2023/02364	AN ARTIFICIAL INTELLIGENCE-BASED PET TRAINING ROBOT	2023/02/23
2023/02365	AN AI-BASED ELEVATOR FACE RECOGNITION DEVICE	2023/02/23
2023/02366	A PIPELINE CONNECTION STRUCTURE AND AN INTEGRATED WATER AND FERTILIZER IRRIGATION UNIT	2023/02/23
2023/02368	AN ON-LINE BEAD CHANGING EQUIPMENT FOR SAND MILL	2023/02/23
2023/02369	A COMMUNICATION TOWER FAULT DETECTION DEVICE	2023/02/23
2023/02370	A SCAVENGER FOR SHRIMP AND CRAB AQUACULTURE MIXED TRASH FISH AND PREPARATION METHOD	2023/02/23
2023/02371	A THREE-DIMENSIONAL FACE RECOGNITION DEVICE BASED ON THREE-DIMENSIONAL POINT CLOUD	2023/02/23
2023/02372	A MONGOLIAN ACUPUNCTURE NEEDLE AND PREPARATION METHOD THEREOF	2023/02/23
2023/02373	SUBSTATION POWER SUPPLY REMOTE FUNCTION INSPECTION AND TESTING SYSTEM	2023/02/23
2023/02374	CALCULATION AND ANALYSIS METHOD OF SHIP OPERATION BENEFIT	2023/02/23
2023/02375	A PROCESS FOR FORMULATING FAST DISSOLVING TABLETS OF ETODOLAC AND ITS COMPOSITION THEREOF	2023/02/23
2023/02376	A SYSTEM ON RENEWABLE ENERGY BASED COOL CHAMBER FOR COLD STORAGE	2023/02/23
2023/02377	METHOD FOR MULTI-TECHNOLOGY PLATFORM INFORMATION MANAGEMENT	2023/02/23
2023/02378	A SPECIAL POWER SUPPLY DEVICE FOR POWER DISTRIBUTION AUTOMATION TERMINAL DEBUGGING	2023/02/23
2023/02379	AN ELECTRICAL AUTOMATIC SPRINKLER DEVICE	2023/02/23
2023/02380	FULL-ELECTRIC SELF-PROPELLED TOTAL MIXED RATION STIRRER	2023/02/23
2023/02381	A NATURAL EDIBLE COMPOSITION WITH HEALTH FUNCTION AND ITS APPLICATION ,COSMETICS AND ITS PREPARATION MOTHOD	2023/02/23
2023/02382	AN OLD-AGE ASSISTED WHEELCHAIR WITH A CONTINUOUS MECHANICAL ARM	2023/02/23
2023/02383	A WATER SEEPAGE TESTING DEVICE FOR BUILDING EXTERIOR WALL	2023/02/23
2023/02384	LIQUID SAMPLING DEVICE FOR CHEMICAL ANALYSIS	2023/02/23
2023/02385	A COLLAPSIBLE CONVEYOR	2023/02/23
2023/02387	A LOADING SERVICE VEHICLE FOR POULTRY	2023/02/23

Application Number	Patent Title	Filing Date
	TRANSPORTATION SYSTEM	
2023/02389	AN ELEVATOR DOOR FOR LIMIT DEVICE FOR ELEVATOR MAINTENANCE	2023/02/23
2023/02409	PLANT TISSUE CULTURE MEDIUM AND PREPARATION METHOD	2023/02/23
2023/02410	CHARGING METHOD FOR HORIZONTAL HOLES IN UNDERGROUND MINE FRACTURED ROCK MASSES	2023/02/23
2023/02411	METHOD FOR EXTRACTION AND HIGH-VALUE UTILIZATION OF FE, ZN AND PB IN ELECTRIC FURNACE DEDUSTING ASH	2023/02/23
2023/02412	METHOD FOR IMPROVING ROOF-CONTACTED FILLING RATE OF END SAND DISCHARGING STOPE IN UNDERGROUND MINES	2023/02/23
2023/02413	METHOD FOR TREATMENT OF GROUNDWATER DISASTER OF WEAKLY-PERMEABLE SOIL LAYER SLOPE	2023/02/23
2023/02414	METHOD FOR DETERMINING ROUGHNESS OF A BLOCK STONE INTERFACE BASED ON A BLOCK STONE CONTOUR	2023/02/23
2023/02415	FLOTATION METHOD FOR COMPLEX AND REFRACTORY COPPER-SILVER SULFIDE ORE	2023/02/23
2023/02419	A LEAD-BASED ALLOY ELECTROLYTIC FURNACE	2023/02/24
2023/02427	AN EXPERIMENTAL DEVICE AND METHOD FOR COASTAL UPWELLING ON A ROTATING PLATFORM	2023/02/24
2023/02429	A DATA ACQUISITION BOX BASED ON ARTIFICIAL INTELLIGENCE	2023/02/24
2023/02430	WASTE LIQUID COLLECTING DEVICE FOR MEDICAL NURSING	2023/02/24
2023/02431	USER-SIDE PHOTOVOLTAIC POWER GENERATION SYSTEM	2023/02/24
2023/02432	CHITOSAN-IRON SUPPLEMENT FOR PETS AND PREPARATION METHOD THEREFOR AND APPLICATION THEREOF	2023/02/24
2023/02438	OFF-GRID CONTROL METHOD FOR HYBRID ENERGY STORAGE DC MICROGRID	2023/02/24
2023/02445	HINGED BRAKE ACTUATING MECHANISM BASED ON DUAL SHAFT MOTOR AND USE METHOD THEREOF	2023/02/24
2023/02446	PREPARATION METHOD FOR A SAPO-5 MOLECULAR SIEVE WITH HIGH CRYSTALLINITY	2023/02/24
2023/02448	HUI NATIONALITY MEDICINE BLOOD-GLUCOSE-REDUCING AND BLOOD-FAT-LOWERING COMPOUND	2023/02/24
2023/02455	MULTISCALE STEEL FIBER REINFORCED SULPHOALUMINATE CEMENT-BASED REACTIVE POWDER CONCRETE	2023/02/24
2023/02457	TRADITIONAL CHINESE MEDICINE COMBINED EXTRACT WITH ANTIBACTERIAL AND ANTI-	2023/02/24

Application Number	Patent Title	Filing Date
	INFLAMMATORY EFFECTS	
2023/02458	METHOD FOR PREPARING GLEDITSIA SINENSIS DEGRADING FUNCTIONAL POLYSACCHARIDE	2023/02/24
2023/02464	A MULTI-SENSORY REHABILITATION TRAINING DEVICE	2023/02/24
2023/02465	A NEEDLE ACCESS DEVICE FOR ACUPUNCTURE IN TRADITIONAL CHINESE MEDICINE	2023/02/24
2023/02476	MEDICINE PREPARED FROM LACTOFERRIN FOR PREVENTING AND TREATING MYCOTOXIN POISONING AND USE THEREOF	2023/02/24
2023/02477	AN IMAGE SEGMENTATION DEVICE AND A SEGMENTATION METHOD BASED ON DEEP LEARNING	2023/02/24
2023/02478	SPECIFIC FLOW TYPE IRRIGATION WATER METERING CONTROL DEVICE	2023/02/24
2023/02479	AN INTEGRAL SPINNING FORMING DEVICE FOR TITANIUM ALLOY PLATE	2023/02/24
2023/02480	MEDICINE CONTAINING LITHOCHOLIC ACID FOR PREVENTING AND TREATING MYCOTOXIN POISONING, AS WELL AS PREPARATION METHOD AND USE THEREOF	2023/02/24
2023/02481	METHOD FOR PREPARING THE HIGH-MODULUS 6061 ALUMINUM ALLOY PLATE WITH LOW POROSITY	2023/02/24
2023/02482	A DIGITAL MIDI WIND SYNTH	2023/02/24
2023/02483	ISOLATION OF IRON-PROMOTING ENDOPHYTIC FUNGI FROM THE SEEDS OF WOOD BUTTERFLY AND ITS APPLICATION	2023/02/24
2023/02486	A PREDICTION METHOD FOR DEEP PROSPECTING OF HYDROTHERMAL VEIN TYPE TIN-TUNGSTEN POLYMETALLIC DEPOSIT	2023/02/24
2023/02487	VEHICLE VIOLATION DETECTION SYSTEM BASED ON DEEP LEARNING	2023/02/24
2023/02490	AUTOMATIC MOTOR FAULT IDENTIFICATION METHOD AND SYSTEM, ELECTRONIC DEVICE AND MEDIUM	2023/02/24
2023/02508	GAMMA-POLYGLUTAMIC ACID MOLECULARLY IMPRINTED POLYMER MEMBRANE, PREPARATION METHOD AND MULTIFUNCTIONAL BIOLOGICAL ADSORPTION MATERIAL	2023/02/24
2023/02509	A METHOD FOR ESTABLISHING ALPHA7-NACHR GENE KNOCKOUT MOUSE MODEL	2023/02/24
2023/02512	RAINWATER COLLECTION AND PURIFICATION DEVICE	2023/02/24
2023/02513	METHOD FOR RESTORING RIVER SEDIMENT BY MEANS OF BIOCHAR PREPARED FROM AGRICULTURAL WASTE	2023/02/24
2023/02514	METHOD FOR PREPARING VANADIUM-DOPED	2023/02/24

Application Number	Patent Title	Filing Date
	AND HIGH-WATER SINGLE-CRYSTAL MANGANOCHROMITE UNDER HIGH-TEMPERATURE AND HIGH-PRESSURE CONDITION	
2023/02515	METHOD FOR PREPARING NICKEL-DOPED AND HIGH-WATER SINGLE-CRYSTAL COCHROMITE UNDER HIGH-TEMPERATURE AND HIGH-PRESSURE CONDITION	2023/02/24
2023/02516	METHOD FOR PREPARING TITANIUM-DOPED AND HIGH-WATER SINGLE-CRYSTAL COULSONITE UNDER HIGH-TEMPERATURE AND HIGH-PRESSURE CONDITION	2023/02/24
2023/02518	A HIGH PRESSURE WATER DRILLING MINING DEVICE FOR STEEPLY INCLINED COAL SEAM	2023/02/24
2023/02539	APPARATUS, DEVICE AND METHOD FOR PHOTODETECTION OF PATHOGENS	2023/02/24
2023/02563	A PORTABLE ATOMIZING SPRAY DEVICE	2023/02/24
2023/02564	A FOLDABLE SPRAY DEVICE	2023/02/24
2023/02565	A SERVER CABINET FOR SIMPLE INSTALLATION	2023/02/24
2023/02566	A RAPID COOLING DEVICE FOR SERVER CABINET	2023/02/24
2023/02567	A FABRIC THERMAL PROTECTION PERFORMANCE EVALUATION DEVICE FOR AIRFLOW UNDER CLOTHES	2023/02/24
2023/02569	BENEFICIATION METHOD OF CASCADE RECOVERY AND STAGED TAILINGS DISCARDING OF LOW-GRADE CHROMITE	2023/02/24
2023/02570	COMBINED MINING METHOD FOR UNDERGROUND MINES	2023/02/24
2023/02571	METHOD FOR CAVING TREATMENT AND ELIMINATION OF LARGE GOAF IN UNDERGROUND MINES	2023/02/24
2023/02572	METHOD FOR DUST SUPPRESSION BY ADVANCED WALL PROTECTION IN UNDERGROUND TUNNELING BLASTING	2023/02/24
2023/02580	PORTABLE WATER SAMPLE COLLECTION DEVICE	2023/02/27
2023/02581	ENERGY DISSIPATION AND SHOCK ABSORPTION DEVICE BETWEEN COLUMNS FOR SILOS	2023/02/27
2023/02582	METHOD FOR EXTRACTING BAMBOO FIBER	2023/02/27
2023/02583	MAJOR QTL LOCUS QFPC-1B FOR CONTROLLING PROTEIN CONTENT IN WHEAT FLOUR AND ITS MOLECULAR MARKER APPLICATION	2023/02/27
2023/02584	ROBOT SERVO CONTROL FAULT DETECTION SYSTEM BASED ON DIGITAL TWIN	2023/02/27
2023/02585	HYPERURICEMIA RENAL INJURY MODEL AND CONSTRUCTION METHOD THEREOF	2023/02/27
2023/02586	DEVICE AND METHOD FOR TESTING SETTLING VELOCITY OF NON-SPHERICAL	2023/02/27

Application Number	Patent Title	Filing Date
	PARTICLES IN ENVIRONMENTS WITH VARIOUS VISCOUS FORCE COEFFICIENTS	
2023/02587	ATOMIZER FOR PEDIATRIC RESPIRATORY TRACT THERAPY	2023/02/27
2023/02588	METHOD FOR IMPROVING PHOTOCATALYTIC CO2 REDUCTION PERFORMANCE OF TIO2 BY IN-SITU PHOTODEPOSITION OF CUAU	2023/02/27
2023/02589	APPLE POLLEN SUSPENDING AGENT AND POLLINATION APPLICATION METHOD THEREOF	2023/02/27
2023/02590	PRETREATMENT DEVICE FOR OIL-WATER SEPARATION AND USE METHOD THEREOF	2023/02/27
2023/02591	NOVEL GREEN ECOLOGICAL ENERGY-SAVING WALL	2023/02/27
2023/02592	AQUAPONICS SYSTEM FOR SPECIAL AQUATIC ANIMALS	2023/02/27
2023/02593	A NANO-DEVICE USING ULTRA-THIN TRI-LAYERED STRAINED-CHANNEL FOR ENHANCING DRIVE CURRENTS IN TRI–GATE FIN-FET ARCHITECTURE	2023/02/27
2023/02595	A GALLIC ACID–STEARYLAMINE CONJUGATE COMPOSITION AND ITS PREPARATION PROCESS THEREOF	2023/02/27
2023/02597	AN UNDERLAP INDUCED NANO SYSTEM WITH STRAINED-SI CHANNEL BASED DOUBLE GATE NANO-FIELD EFFECT TRANSISTOR (DG-FET)	2023/02/27
2023/02598	A METHOD AND SYSTEM FOR PERFORMING SENTIMENT ANALYSIS ON TWEETS FROM GENUINE TWITTER ACCOUNTS	2023/02/27
2023/02599	A REAL CODED GENETIC ALGORITHM BASED SYSTEM FOR FEED FORMULATION	2023/02/27
2023/02602	A SYSTEM FOR EVALUATING SYNERGISTIC ANTI-CANCER EFFECTS OF 5-FUOROURACIL AND GALLIC ACID-STEARYLAMINE CONJUGATE	2023/02/27
2023/02603	A SYSTEM AND A METHOD FOR PREPARING A FORMULATION AND CHARACTERIZING BIODEGRADABLE MEDICATED CHEWING GUM	2023/02/27
2023/02604	MACHINE VISION-BASED COILED MATERIAL OFF-LINE AUTOMATIC PARKING REWINDING METHOD	2023/02/27
2023/02605	ORGANIC FERTILIZER WITH MARINE BIOLOGICAL POLYPEPTIDE CHELATING METAL ELEMENTS AND PREPARATION METHOD THEREOF	2023/02/27
2023/02606	AUTOMATIC TABLEWARE SORTING DEVICE AND SORTING METHOD	2023/02/27
2023/02607	DEVICE AND METHOD FOR MEASURING AIR VOLUME	2023/02/27
2023/02609	CULTIVATION METHOD FOR IMPROVING YIELD AND QUALITY OF PLUM TREES	2023/02/27
2023/02610	MEDIUM MANGANESE STEEL LINING	2023/02/27

Application Number	Patent Title	Filing Date
	MATERIAL FOR BALL MILLS AND PREPARATION METHOD THEREOF	
2023/02611	METHOD FOR MEASURING THE MATERIAL GRABBING ACCURACY	2023/02/27
2023/02612	ANTI-SLIP STAPLE/COMPOUND FILAMENT RING-SPUN CORESPUN YARN AND ONLINE PREPARATION METHOD THEREOF	2023/02/27
2023/02613	REHABILITATION MECHANICAL ARM	2023/02/27
2023/02614	HISTONE DEACETYLASE 6 INHIBITOR CONTAINING CHALCONE STRUCTURE AND ITS PREPARATION METHOD AND APPLICATION	2023/02/27
2023/02615	A MEDIA COMPOSITION AND A METHOD OF DEVELOPING A MICROPROPAGATION TECHNOLOGY FOR PICRORHIZA KURROA HERB	2023/02/27
2023/02616	A METHOD FOR MAKING AUTHENTICATION ENCRYPTION SCHEMES ROBUST AGAINST DIFFERENTIAL FAULT ATTACKS	2023/02/27
2023/02617	A MANUALLY OPERATIVE SYSTEM FOR MANUFACTURING BOTTLE USING BAMBOO POWDER	2023/02/27
2023/02618	A METHOD FOR PERFORMING MATHEMATICAL MODELLING, FORECAST, AND ANALYSIS ON SPREAD OF COVID-19	2023/02/27
2023/02619	AN OPTICAL SPECTRAL AMPLITUDE CDMA SYSTEM AND METHOD FOR UNIPOLAR CODES WITH DOUBLE WEIGHT CONSTRUCTION	2023/02/27
2023/02620	AN EMBEDDED SYSTEM FOR MEASUREMENT OF HUMIDITY, SOIL MOISTURE AND TEMPERATURE IN POLYHOUSE	2023/02/27
2023/02625	A SYSTEM TO PREDICT GROUNDWATER LEVEL AND A METHOD THEREOF	2023/02/27
2023/02626	A COMPOSITION FOR PREPARING STEARIC ACID-COATED PLASMONIC SILVER NANOPARTICLES AND A METHOD THEREOF	2023/02/27
2023/02627	A GREEN, HUMAN URINE-BASED, FUNGUS-ASSISTED, ALKALI-CUM-HYDROTROPIC LIGNOCELLULOSIC BIOMASS PRE-TREATMENT PROCESS	2023/02/27
2023/02628	A METHOD TO DEVELOP COMPREHENSIVE WATER QUALITY-INDEX-BASED ON ANALYTICAL HIERARCHY PROCESS TO ASSESS GROUNDWATER QUALITY	2023/02/27
2023/02629	VANADIUM PENTOXIDE-TIN (V2O5-SN) MESH ELECTRODE SYSTEM AND A METHOD FOR DEVELOPING AN INVERTED POLYMER SOLAR-CELL THEREOF	2023/02/27
2023/02630	ENERGY-SAVING MODULAR BUILDING WALL	2023/02/27
2023/02631	FUNCTIONAL FERTILIZER FOR FOLIAR APPLICATION AND PREPARATION METHOD AND APPLICATION METHOD THEREOF	2023/02/27
2023/02632	AN AUTOMATED SYSTEM FOR DIGITAL TWIN	2023/02/27

Application Number	Patent Title	Filing Date
	FOR ASSET MANAGEMENT	
2023/02633	UNDERGROUND DOUBLE-VORTEX CYCLONE OIL-WATER SEPARATOR WITH GOOD SEPARATION EFFECT	2023/02/27
2023/02634	SEPARATION MEMBRANE LOADED WITH CARBON NANOTUBES, PREPARATION METHOD AND APPLICATION THEREOF	2023/02/27
2023/02635	SUPERHYDROPHOBIC SEPARATION MEMBRANE MATERIAL FOR OIL PRODUCT RECOVERY, AND PREPARATION METHOD AND APPLICATION THEREOF	2023/02/27
2023/02636	METHOD FOR IMPROVING STABILITY OF LIQUID POLLINATION IN PEAR ORCHARDS	2023/02/27
2023/02637	FORMULA AND PROCESSING TECHNOLOGY OF SEA SALT ICE CREAM	2023/02/27
2023/02638	PAINTING TOOL STORAGE SYSTEM WITH CLEANING FUNCTION	2023/02/27
2023/02639	ANTI-VIBRATION DAMPING DEVICE FOR BRIDGES	2023/02/27
2023/02640	METHOD FOR PREPARING SEA GRAPE PARTICLES IN DEEP OCEAN WATER	2023/02/27
2023/02641	TRANSDERMAL DRUG DELIVERY SYSTEM	2023/02/27
2023/02642	SURVEYING AND MAPPING INSTRUMENT POSITIONING DEVICE FOR SURVEYING AND MAPPING ENGINEERING	2023/02/27
2023/02643	ARTEMISIA ARGYI ESSENCE SUITABLE FOR ALLERGIC CONSTITUTION AND PREPARATION METHOD THEREOF	2023/02/27
2023/02644	MODULAR CONCRETE-FILLED STEEL TUBULAR COLUMN CONNECTION STRUCTURE	2023/02/27
2023/02645	PREPARATION METHOD OF ACTIVATE CARBON LITHIUM TITANATE LITHIUM ION CAPACITOR	2023/02/27
2023/02646	CHUANXIONG NATURAL ANTIDEPRESSANT SMELL STICK AND PREPARATION METHOD THEREOF	2023/02/27
2023/02647	BIOMARKER OF EXCESS HEAT SHANGHUO (UPPER FEVER) SYNDROME INTERVENED BY HUANGLIAN JIEDU PILLS AND APPLICATION THEREOF	2023/02/27
2023/02648	BUILDING SUPPORT PLATE EASY TO BE ASSEMBLED AND SECURED	2023/02/27
2023/02649	TRADITIONAL CHINESE MEDICINE COMPOUND, PREPARATION AND USE THEREOF	2023/02/27
2023/02650	LOW VISCOSITY AND HIGH STRENGTH CEMENTITIOUS REPAIRING GROUTING MATERIAL AND ITS PREPARATION METHOD AND APPLICATION	2023/02/27
2023/02651	INTUBATION FIXING DEVICE FOR CHILDREN'S RESPIRATORY DEPARTMENT	2023/02/27

Application Number	Patent Title	Filing Date
2023/02653	METHOD FOR IMPROVING EXTRACTION RATE OF ACTIVE CRUDE POLYSACCHARIDE FROM CELL WALL OF PHELLINUS BAUMII PILAT FRUITING BODY	2023/02/27
2023/02654	SAND SIFTER FOR CONSTRUCTION ENGINEERING	2023/02/27
2023/02655	WIRELESS NANOTECHNOLOGY-BASED SYSTEM AND METHOD FOR DIAGNOSIS OF NEUROLOGICAL AND PHYSIOLOGICAL DISORDERS	2023/02/27
2023/02658	SYSTEM FOR AIR POLLUTION PREDICTION FOR NEW AIR QUALITY MONITORING STATION USING CHAINING APPROACH OF TRANSFER LEARNING	2023/02/27
2023/02660	A SYSTEM AND METHOD FOR PREDICTING FLOODS	2023/02/27
2023/02662	A SOFT ELECTRIC ROBOTIC FISH	2023/02/27
2023/02668	A SMART SAFETY HANDHELD DEVICE	2023/02/27
2023/02670	AN AUTOMATIC BENGALI DEGRADED DOCUMENT RECOGNITION SYSTEM	2023/02/27
2023/02676	MIXED AFFORESTATION METHOD FOR IMPROVING PINUS KESIYA PLANTATION GROWTH	2023/02/27
2023/02677	SAMPLE LIQUID PURIFICATION TREATMENT METHOD FOR DETECTING SQUALENE CONTAINED IN CIGARETTE SMOKE BY HIGH PERFORMANCE LIQUID CHROMATOGRAPHY	2023/02/27
2023/02678	METHOD FOR DETECTING SQUALENE CONTAINED IN CIGARETTE SMOKE BASED ON HIGH PERFORMANCE LIQUID CHROMATOGRAPHY	2023/02/27
2023/02679	SAMPLE PRETREATMENT METHOD FOR DETECTING SQUALENE CONTAINED IN CIGARETTE SMOKE	2023/02/27
2023/02680	SAMPLE LIQUID PREPARATION METHOD FOR DETECTING SQUALENE CONTAINED IN CIGARETTE SMOKE BASED ON HIGH PERFORMANCE LIQUID CHROMATOGRAPHY	2023/02/27
2023/02681	METHOD FOR TOBACCO LEAF STYLE SIMILARITY CLASSIFICATION BASED ON NEAR-INFRARED SPECTRAL FEATURES	2023/02/27
2023/02682	LIVESTOCK MANURE TREATMENT SYSTEM	2023/02/27
2023/02685	MULBERRY POLYSACCHAROSE IRON SUPPLEMENT FOR PETS AND PREPARATION METHOD THEREFOR AND APPLICATION THEREOF	2023/02/27
2023/02686	A SYSTEM AND A METHOD FOR PROMOTING SEAWATER EVAPORATION TO PRODUCE SALT BY PHOTOELECTRIC THERMAL LINKAGE	2023/02/27
2023/02687	A FLUE GAS REDUCTION DENITRATION DEVICE AND METHOD COUPLING SNCR AND SCR	2023/02/27

Application Number	Patent Title	Filing Date
2023/02688	THE DEVICE AND THE METHOD OF A SOLAR-ENHANCED TWO-DIMENSIONAL FLUIDIZED BED FOR DRYING MATERIALS	2023/02/27
2023/02689	A TREATMENT SYSTEM FOR SAWDUST WASTE RESOURCE UTILIZATION	2023/02/27
2023/02690	A DESKTOP TACTILE INTERACTIVE DEVICE	2023/02/27
2023/02691	CITRUS CYSTS FOR THE SOLID DRINK AND ITS PREPARATION METHOD	2023/02/27
2023/02692	TREATMENT SYSTEM FOR DEGRADING ANTIBIOTICS IN WASTEWATER	2023/02/27
2023/02693	METHOD FOR QUICKLY BREAKING DORMANCY OF RADIX GLEHNIAE SEEDS	2023/02/27
2023/02694	ENVIRONMENT-FRIENDLY SELF-SENSING CONCRETE AND PREPARATION METHOD THEREOF	2023/02/27
2023/02695	SEED PRESERVATION METHOD CAPABLE OF STORING SEEDS ALL YEAR ROUND AND HAVING HIGH GERMINATION RATE	2023/02/27
2023/02696	FIN-COLUMN HIGH-EFFICIENT RADIATOR AND HIGH-EFFICIENT JET LIQUID COOLING CABINET	2023/02/27
2023/02697	CATIONIC EMULSIFIED ASPHALT AND PREPARATION METHOD THEREOF	2023/02/27
2023/02698	A DROUGHT-RESISTANT AND SALT-TOLERANT UPLAND COTTON GENE AND ITS APPLICATION	2023/02/27
2023/02699	METHOD FOR REDUCING OXYGEN-CONTAINING FUNCTIONAL GROUPS ON LOW-RANK COAL SURFACES	2023/02/27
2023/02700	DISINFECTION DEVICE OF RECLAIMED WATER FOR LANDSCAPE WATER	2023/02/27
2023/02701	GROWTH-PROMOTING, PROTECTIVE AND THERAPEUTIC AGENT FOR PREVENTING AND TREATING BRANCH DISEASES	2023/02/27
2023/02703	ANTI-RECOVERY BILL SHREDDING PROCESSING DEVICE FOR ACCOUNTING	2023/02/27
2023/02704	CALCULATION METHOD OF CARBON EMISSION FOR CONSTRUCTION WASTE TREATMENT	2023/02/27
2023/02705	INTELLIGENT MONITORING DEVICE AND METHOD FOR FIRE PIPELINE	2023/02/27
2023/02706	INTELLIGENT SORTING DEVICE AND METHOD FOR ELECTRONIC COMPONENTS	2023/02/27
2023/02707	DEVICE AND METHOD FOR AUTOMATICALLY DISASSEMBLING CIRCUIT BOARD	2023/02/27
2023/02708	APPLICATION OF RRNA SYNTHESIS INHIBITOR IN TREATING NEPHROTOXICITY	2023/02/27
2023/02709	VIBRATING BAITING BOAT FOR SHRIMP AND CRAB PONDS	2023/02/27
2023/02710	PURE NATURAL HEALTH BEVERAGE AND PREPARATION METHOD THEREOF	2023/02/27
2023/02712	INTELLIGENT SHIP MONITORING CONTROL METHOD FOR POND CULTURE	2023/02/27

Application Number	Patent Title	Filing Date
2023/02713	SNP SITE FOR IDENTIFYING BRUCELLA SUIS S2 VACCINE STRAIN AND ITS APPLICATION	2023/02/27
2023/02714	MACHINE VISION-BASED METHOD FOR IDENTIFYING COOKING DEGREE OF FEN-FLAVOR LIQUOR SORGHUM	2023/02/27
2023/02715	IDENTIFICATION METHOD OF BREWING CHARACTERISTICS OF HIGHLAND BARLEY VARIETIES	2023/02/27
2023/02716	GINGER EXTRACT COMPOUND PRESERVATIVE AND PREPARATION METHOD THEREOF	2023/02/27
2023/02717	INTELLIGENT ZN-MOF MATERIAL FOR PHOTOREGULATION OF ADSORPTION/RELEASE OF ORGANIC DYES	2023/02/27
2023/02718	AN IMAGE DETECTION METHOD BASED ON DEEP LEARNING	2023/02/27
2023/02719	VIRTUAL SIMULATION TEACHING DEVICE BASED ON UNITY3D ENGINE	2023/02/27
2023/02720	A CONCENTRATED CHINESE HERBAL MEDICINE FEED SUITABLE FOR DETOXIFICATION AND DEODORIZATION AND AROMA ENHANCEMENT OF RUMINANTS AND A PREPARATION METHOD THEREOF	2023/02/27
2023/02721	NOVEL SPRAYING SELF-SENSING CEMENTITIOUS COMPOSITE MATERIAL AND ITS PREPARATION METHOD	2023/02/27
2023/02722	CHINESE HERBAL MEDICINE-ADDED FEED AUXILIARY MATERIAL MATRIX FORMULA AND PREPARATION METHOD THEREOF	2023/02/27
2023/02723	METHOD FOR QUICKLY OBSERVING TRICHOMES AND STOMATA OF TEA PLANTS	2023/02/27
2023/02724	PREPARATION FOR BIVALENT SUBUNIT VACCINE OF STREPTOCOCCUS AGALACTIAE AND STREPTOCOCCUS INIAE IN TILAPIA AND ITS APPLICATION	2023/02/27
2023/02725	A TRADITIONAL CHINESE MEDICINE FOR FEMALE IMMUNITY IMPROVEMENT AND CORONAVIRUS ELIMINATION AND PREPARATION METHOD THEREOF	2023/02/27
2023/02726	A TRADITIONAL CHINESE MEDICINE COMPOSITION FOR FEMALE IMMUNITY IMPROVEMENT AND CORONAVIRUS ELIMINATION	2023/02/27
2023/02727	PREPARATION METHOD AND APPLICATION OF NITROGEN-DOPED CORNCOB-BASED ACTIVATED CARBON	2023/02/27
2023/02728	MULTIFUNCTIONAL EXAMINATION APPARATUS FOR PRE-HOSPITAL DAMAGE CONTROL RESUSCITATION	2023/02/27
2023/02729	SYSTEM FOR SCREENING DAIRY COWS HAVING SUBCLINICAL MASTITIS IN DAIRY HERD	2023/02/27

Application Number	Patent Title	Filing Date
2023/02730	METHOD FOR PREPARING (BENZENE-1,3,5-TRIYL) TRIACETONITRILE	2023/02/27
2023/02731	METHOD FOR PREPARING (3-BROMO-2-FLUOROPHENYL) METHANAMINE	2023/02/27
2023/02732	METHOD FOR PREPARING 4-AMINONAPHTHALENE-2,6-DICARBOXYLIC ACID	2023/02/27
2023/02733	IMPROVED METHOD FOR PREPARING 2,5-DISUBSTITUTED-1,4-TEREPHTHALDEHYDE	2023/02/27
2023/02734	POLY(NORBORNENE-B-POLAR FUNCTIONALIZED NORBORNENE) AND PREPARATION METHOD THEREFOR	2023/02/27
2023/02735	POLY(NORBORNENE-B-VINYL NORBORNENE) AND PREPARATION METHOD THEREFOR	2023/02/27
2023/02736	POLYVINYL NORBORNENE AND PREPARATION METHOD THEREFOR	2023/02/27
2023/02737	THIOGLUCOSE COMPOUND AND PREPARATION METHOD THEREFOR	2023/02/27
2023/02738	PREPARATION METHOD FOR CESIUM PIVALATE-PROMOTED ARYLBORONIC ESTER	2023/02/27
2023/02739	A POLYESTER/CHITOSAN GEL COMPOSITE FIBROUS MEMBRANE AND ITS PREPARATION METHOD	2023/02/27
2023/02740	A GELATIN/POLYESTER FIBER DRESSING AND ITS PREPARATION METHOD	2023/02/27
2023/02741	A PREPARATION METHOD OF TRANSITION METAL SULFIDE DERIVED FROM ZIF-67 FOR ELECTRODE MATERIAL	2023/02/27
2023/02742	A DEVICE ASSISTING LOWER LIMB FLEXION AND EXTENSION REHABILITATION TRAINING AND ITS CONTROL METHOD	2023/02/27
2023/02743	MULTIMEDIA PUSH-PULL BLACKBOARD BASED ON MULTIMEDIA CLASSROOMS IN PRIMARYAND SECONDARY SCHOOLS	2023/02/27
2023/02744	CO2 CONCENTRATION CONTROL DEVICE FOR DRY HEAT STERILIZATION CO2 INCUBATOR	2023/02/27
2023/02745	DAMPING DEVICE FOR COMPUTER	2023/02/27
2023/02746	GHABC1K14-A09 GENE AND APPLICATION THEREOF IN DROUGHT AND SALT TOLERANCE OF UPLAND COTTON (GOSSYPIUM HIRSUTUM)	2023/02/27
2023/02747	A METHOD FOR PREPARING GREEN AND ENVIRONMENTALLY FRIENDLY STARCH-BASED FLEXIBLE KEYBOARD	2023/02/27
2023/02748	VIRTUAL REALITY TECHNOLOGY DEVICE FOR CHINESE PHONETIC TEACHING	2023/02/27
2023/02749	A LAPAROSCOPIC CLAMPING MECHANISM FOR UROLOGICAL SURGERY	2023/02/27
2023/02750	METHOD FOR PREPARING HIGH-PERFORMANCE FLAME-RETARDANT FABRIC AND PREPARATION DEVICE THEREOF	2023/02/27
2023/02752	PREPARATION METHOD OF PEANUT SHELL-	2023/02/27

Application Number	Patent Title	Filing Date
	BASED ACTIVATED CARBON AND ITS APPLICATION IN CO2 CAPTURE AND ADSORPTION	
2023/02753	QUANTITATIVE ASSESSMENT SYSTEM OF LEAD IN SEDIMENTS OF AQUACULTURE SEA AREA	2023/02/27
2023/02754	PREPARATION METHOD OF ANTIBACTERIAL DEGRADABLE WASHING POWDER	2023/02/27
2023/02755	A VIBRATION INSULATION DEVICE FOR BUILDINGS	2023/02/27
2023/02756	A METHOD OF ADOPTING MAGNESIUM CHLORIDE CARBONATE FOR REMOVING PHOSPHORUS FROM WATER	2023/02/27
2023/02757	METHOD FOR IDENTIFYING CONTENT OF BOVINE AND GOAT WHEY POWDER BASED ON NATIVE-PAGE	2023/02/27
2023/02758	BICUBIC INTERPOLATION CIRCUIT BASED ON FPGA	2023/02/27
2023/02759	PRETREATMENT METHOD BASED ON SPME FOR VOLATILE COMPONENT ANALYSIS OF CYMBIDIUM KANRAN	2023/02/27
2023/02760	CATALYST PREPARED BY BENZOCYCLOALKYL ALPHA-DIIMIDE LIGAND, PREPARATION METHOD AND APPLICATION THEREOF	2023/02/27
2023/02761	FABRIC WITH AN ELECTRIC FIELD SHIELDING STRUCTURE	2023/02/27
2023/02762	NOVEL WEBGIS ARCHITECTURE BASED ON THE WEB SERVER SIDE	2023/02/27
2023/02773	DYNAMIC AEROSOL DILUTING AND GENERATING DEVICE AND ATOMIZING ASSEMBLY THEREOF	2023/02/27
2023/02774	MINERAL PROCESSING AND SORTING DEVICE	2023/02/27
2023/02775	ULTRAFINE ELECTRONIC-GRADE COMPOSITE QUARTZ POWDER WITH LOW EXPANSION RATE AND HIGH THERMAL CONDUCTIVITY AND PRODUCTION METHOD THEREFOR	2023/02/27
2023/02776	FLORFENICOL SOLUBLE POWDER AND PREPARATION METHOD THEREFOR	2023/02/27
2023/02777	A MONITORING DEVICE AND A SECURITY MONITORING SYSTEM BASED ON ARTIFICIAL INTELLIGENCE	2023/02/27
2023/02778	METHOD FOR ANALYZING FORMATION MECHANISM OF ORGANIC AEROSOL	2023/02/27
2023/02779	AN ARTIFICIAL INTELLIGENCE ACCESS CONTROL SYSTEM WITH A HUMAN FACE RECOGNITION DEVICE	2023/02/27
2023/02780	AUTOMATIC PRESSURE HEMOSTATIC BANDAGE FOR HEMODIALYSIS PATIENTS	2023/02/27
2023/02781	AUTONOMOUS MOVING-TYPE FIRE ESCAPE TILE DEVICE	2023/02/27
2023/02782	WELLBORE INTELLIGENT WARNING METHOD	2023/02/27

Application Number	Patent Title	Filing Date
	AND SYSTEM BASED ON BP NEURAL NETWORK AND KALMAN FILTER	
2023/02783	CATALYST FOR OLEFIN OLIGOMERIZATION AND ITS PREPARATION METHOD	2023/02/27
2023/02784	PREPARATION METHOD OF FEED MULBERRY SILAGE	2023/02/27
2023/02785	NICKEL AND PALLADIUM COMPLEX WITH N-TRIPHENYLIMINE PYRIDINE AS LIGAND, PREPARATION METHOD AND APPLICATION THEREOF	2023/02/27
2023/02786	PREPARATION METHOD FOR BERYLLIUM COPPER ALLOY STRIP MATERIAL WITH HIGH BERYLLIUM CONTENT	2023/02/27
2023/02787	INTELLIGENT DIAGNOSIS SYSTEM FOR PIG DISEASES BASED ON DATABASE	2023/02/27
2023/02788	RAPID CULTIVATION METHOD FOR APRICOT GRAFTED SEEDLINGS IN HUANG-HUAI WATERSHED AND METHOD FOR DRY LAND AFFORESTATION	2023/02/27
2023/02789	METHOD FOR MUTAGENESIS OF GRAFTED HYBRIDS BETWEEN PEACH GENUS AND APRICOT GENUS	2023/02/27
2023/02790	METHANOL AND AMMONIA COPRODUCTION METHOD	2023/02/27
2023/02791	A SENSING AND MOVABLE FLOOR TILE DEVICE FOR FIRE ESCAPE	2023/02/27
2023/02804	A MATERIAL AND METHOD FOR PREPARING WEAR-RESISTANT IN-SITU TIC REINFORCED TITANIUM MATRIX COATING	2023/02/27
2023/02805	IOT ENABLED ENERGY EFFICIENT ADVANCED 6G COMMUNICATION NETWORK SYSTEM	2023/02/27
2023/02812	A METHOD FOR COMPREHENSIVELY UTILIZING MAGNESITE	2023/02/27
2023/02813	PRODUCT SURFACE DEFECT DETECTION METHOD AND DEVICE BASED ON DEEP LEARNING AND MACHINE VISION	2023/02/27
2023/02814	A METHOD FOR PREPARING MARTENSITIC STEEL COATING WITH HIGH HARDNESS AND CAVITATION RESISTANCE	2023/02/27
2023/02815	A POWDER AND METHOD FOR PREPARING A TIN-BASED BABBITT ALLOY/CARBON FIBER COATING	2023/02/27
2023/02816	A POWDER AND TECHNICAL METHOD USED FOR LASER ADDITIVE MANUFACTURING OF MARAGING STEEL	2023/02/27
2023/02817	A PREPARATION METHOD USED FOR A MODIFIED COATING OF DIRECTIONALLY SOLIDIFIED COLUMNAR CRYSTAL COBALT-BASED SUPERALLOY	2023/02/27
2023/02819	A SYSTEM FOR BENDING AND TWISTING OF ULTRA-THIN FILMS COATED ON A FLEXIBLE SUBSTRATE	2023/02/27

Application Number	Patent Title	Filing Date
2023/02821	A HONEY BADGER OPTIMIZED CONVOLUTIONAL NEURAL NETWORK SYSTEM IN RETINOPATHY AND A METHOD THEREOF	2023/02/27
2023/02822	A PROCESS FOR PREPARATION OF SUSTAINED-DRUG RELEASE BEADS BY IONOTROPIC GELATION AND ITS COMPOSITION THEREOF	2023/02/27
2023/02825	A METHOD FOR PERFORMING IMAGE SHARPENING ON THE BASIS OF LOCAL INTENSITY VARIATION	2023/02/27
2023/02828	A METHOD FOR PREDICTING THE DENSITY OF OXIDE AND FLUORIDE GLASSES USING ARTIFICIAL INTELLIGENCE TECHNIQUES	2023/02/27
2023/02831	NOVEL ELECTROCHEMICAL TESTING DEVICE UNDER COUPLING EFFECT OF MAGNETIC FIELD AND LOAD	2023/02/27
2023/02832	WASTE WATER UTILIZATION DEVICE FOR RESIN ADSORPTION	2023/02/27
2023/02833	A REALTIME LARYNGOSCOPY PRESSURE SENSOR MONITORING DEVICE	2023/02/27
2023/02837	INTEGRAL FORMWORK WITHOUT INTERNAL AND EXTERNAL SUPPORTS FOR PREFABRICATED BOX CULVERTS	2023/02/27
2023/02840	A COMPOSITION AND A METHOD OF PREPARING AN ADSORBENT FOR REMOVING A CATIONIC DYE FROM AN AQUEOUS SOLUTION	2023/02/27
2023/02841	A NANOSYSTEM-BASED DEVICE USING ULTRA-THIN TRI-LAYERED HOI CHANNEL WITH INCREASED DRIVE CURRENTS IN RECTANGULAR GATE	2023/02/27
2023/02842	A METHOD FOR ASSESSING THE ANTI-CANCER EFFECTS OF A METHANOLIC EXTRACT OF CHLOROXYLON SWIETENIA AGAINST HUMAN GLIOBLASTOMA MULTIFORME CELLS	2023/02/27
2023/02843	A COMPOSITION AND METHOD FOR PROVIDING RESISTANCE AGAINST PATHOGEN INFECTION AND DROUGHT STRESS IN ARABIDOPSIS	2023/02/27
2023/02844	AN ARTIFICIAL INTELLIGENCE SYSTEM AND METHOD TO PREDICT COVID-19 THROUGH IMAGES	2023/02/27
2023/02847	A NANOWIRE SYSTEM FOR FASTER SWITCHING WITH ENHANCED ON-CURRENT AND ITS PREPARING PROCESS THEREOF	2023/02/27
2023/02848	AN ANN SYSTEM FOR THE PREDICTION OF DISCHARGE COEFFICIENT OF AN ARCED LABYRINTH SIDE WEIR	2023/02/27
2023/02851	METHOD FOR SCREENING AND MAPPING ANALYSIS OF TRANSCRIPTOME-REGULATED GENES ASSOCIATED WITH PHENOTYPE FLOWER COLOR OF BOUGAINVILLEA	2023/02/27

Application Number	Patent Title	Filing Date
2023/02852	METHOD FOR ESTABLISHING REGENERATION SYSTEM OF BOUGAINVILLEA STEM SEGMENTS	2023/02/27
2023/02853	METHOD FOR INTELLIGENT INDOOR THREE-DIMENSIONAL AND EFFICIENT ORGANIC BAG PROPAGATION OF ANOECTOCHILUS ROXBURGHII (WALL.) LINDL. WITH DISPOSABLE SEEDLINGS TO PRODUCE ROBUST SEEDLINGS	2023/02/27
2023/02854	LOW-CARBON AND HIGH-EFFICIENCY ORGANIC BAG PLANTING METHOD FOR ANOECTOCHILUS ROXBURGHII HAYATA SEEDLINGS	2023/02/27
2023/02869	ECOLOGICAL WAVE DISSIPATION BLOCK	2023/02/27
2023/02875	POWER AND BATTERY SYSTEMS FOR A DIGITAL LICENSE PLATE	2023/02/27
2023/02876	DISPLAY HEALTH CHECK SYSTEM FOR A DIGITAL LICENSE PLATE	2023/02/27
2023/02888	PILE-SUPPORTED WHARF STRUCTURE	2023/02/27
2023/02917	A SMART CAP FOR BLIND PERSON	2023/02/28
2023/02918	A VERTICAL DRAFT SOLAR DRYER	2023/02/28
2023/02919	LECTRIC AUTOMATIC POW DISTRIBUTION CABINET FOR ELECTRONIC INFORMATION PUMP STATION	2023/02/28
2023/02920	REMOTE NURSING DEVICE FOR HYPERTENSION AGED PEOPLES	2023/02/28
2023/02921	BAMBOO FABRIC REINFORCED AIR-SPRING	2023/02/28
2023/02922	COMPUTER SECURITY CONTROLLER BASED ON BIG DATA	2023/02/28
2023/02923	INTELLIGENT WEARABLE BAND FOR HEALTH MONITORING AND TRACKING FOR ORGANIZATIONS	2023/02/28
2023/02924	MULTI-CHEMOTHERAPEUTIC DRUG SYNCHRONOUS PERFUSION DEVICE FOR ONCOLOGY DEPARTMENT	2023/02/28
2023/02925	A DEEP PROCESSING METHOD FOR HEALTH FLOUR WITH HIGH-FIBER AND LOW-SUGAR	2023/02/28
2023/02926	A FIRST AID VENTILATOR	2023/02/28
2023/02927	A MULTI-FUNCTIONAL CLAMP FOR MECHANICAL MANUFACTURING	2023/02/28
2023/02928	A PLANTING MACHINE FOR SORGHUM PLANTING	2023/02/28
2023/02929	LI-FI BASED SYSTEM FOR SECURED ACCESS AND WIRELESS NETWORK DURING ONLINE EXAMINATION IN CLASSROOMS	2023/02/28
2023/02930	POWDER-SELECTING SCREEN MACHINE FOR FLY ASH	2023/02/28
2023/02931	COAL ASH DRY DEVICE	2023/02/28
2023/02932	A MATHEMATICS TEACHING MODEL WITH COMPUTER DISPLAY FUNCTION	2023/02/28
2023/02933	CONTACTLESS AUDIO-VISUAL INTELLIGENT DOORBELL SECURITY SYSTEM USING HYBRID	2023/02/28

Application Number	Patent Title	Filing Date
	TECHNOLOGIES FOR DOMESTIC AND COMMERCIAL APPLICATIONS	
2023/02934	MECHANICAL ARM GRIPPING DEVICE	2023/02/28
2023/02935	ADAPTIVE CONTINUOUS VARIABLE TRANSMISSION COOLING SYSTEM FOR OFF ROAD VEHICLES WITH WIRELESS DATA ACQUISITION SYSTEM	2023/02/28
2023/02936	A METHOD FOR IMPROVING THE EXTRACTION RATE OF POLYPHENOLS IN POMEGRANATE PEEL BY STEAM EXPLOSION TREATMENT	2023/02/28
2023/02937	BRITISH AND AMERICAN LITERATURE APPRECIATION AND ANALYSIS EQUIPMENT	2023/02/28
2023/02938	MERGENCY COMMUNICATION CABINET FOR INTEGRATE ELECTRONIC COMMUNICATION TRANSMISSION	2023/02/28
2023/02939	FIXTURE FOR MANUFACTURING MECHANICAL EQUIPMENT	2023/02/28
2023/02940	BODY FLUID REGENERATING AND SORE THROAT RELIEVING MEDICINAL AND EDIBLE COMPOSITION AND APPLICATION THEREOF	2023/02/28
2023/02941	AGROBACTERIUM TUMEFACIENS STRAIN FOR ACCELERATING WOUND HEALING IN POSTHARVEST POTATO TUBERS	2023/02/28
2023/02942	AUTOMATIC RUBBER UNLOADING ROBOT FOR NATURAL RUBBER DRYING PRODUCTION LINE	2023/02/28
2023/02943	METHOD FOR PREPARING SUBSTANCE BENCHMARK OF EPHEDRAE DECOCTION	2023/02/28
2023/02944	CRYSTAL TRANSFORMATION METHOD FOR 3-(N-TOSYL-L-ALANYLOXY)-INDOLE	2023/02/28
2023/02945	MAGNESIUM SITE-DOPED MAGNESIUM ION BATTERY ANODE MATERIAL AND PREPARATION METHOD THEREFOR	2023/02/28
2023/02946	PORTABLE SURVEYING AND MAPPING DEVICE	2023/02/28
2023/02947	WATER TEMPERATURE AUTOMATIC BLENDING SYSTEM AND METHOD	2023/02/28
2023/02948	PREPARATION METHOD AND USE OF STEREOISOMER IMPURITY TGA-I OF TICAGRELOR KEY INTERMEDIATE	2023/02/28
2023/02950	BENEFICIATION METHOD FOR RECOVERING GRAPHITE	2023/02/28
2023/02951	ENVIRONMENTAL PROTECTION AND NOISE REDUCTION TYPE ALCOHOL-BASED LIQUID FUEL BURNER	2023/02/28
2023/02952	ANAEROBIC FERMENTATION DEVICE WITH FUNCTION OF PRODUCING CLEAN AND RENEWABLE ENERGY	2023/02/28
2023/02953	FEED ADDITIVE FOR NEWBORN CALVES CONTAINING BACILLUS MEGATERIUM	2023/02/28
2023/02954	BREEDING METHOD OF GREEN GRAIN SPRING WHEAT	2023/02/28
2023/02955	DETECTION METHOD OF RACTOPAMINE BASED ON DNA HYDROGEL COATED WITH	2023/02/28

Application Number	Patent Title	Filing Date
	BIFUNCTIONAL CHEMICAL NANOENZYME	
2023/02956	COLORIMETRIC SENSING SYSTEM FOR DETECTING KANAMYCIN	2023/02/28
2023/02957	MELAMINE DETECTION METHOD BASED ON DNA HYDROGEL AND MICROFLUIDIC CHIP	2023/02/28
2023/02958	A KIND OF DIRECT CURRENT AND ALTERNATING CURRENT CONVERSION DEVICE	2023/02/28
2023/02959	WATER-RETAINING COAL MINING METHOD FOR WORKING FACES OF SUPER HIGH SEAM BY SLICING AND STAGE COAL PILLAR FILLING	2023/02/28
2023/02960	TABLE TENNIS LAUNCHER FOR TRAINING	2023/02/28
2023/02961	A METHOD OF MAKING SLOPE PROTECTION FROM SCRAP TYRE INFILLED CONCRETE COMPOSITE ELEMENTS	2023/02/28
2023/02962	A HEAD AND NECK MASSAGER	2023/02/28
2023/02963	THE PREPARATION OF A PD THREE-WAY CATALYST LOADED ON A SPECIFIC CRYSTAL SURFACE CEO2 CARRIER MODIFIED BY ALD	2023/02/28
2023/02964	A METHOD FOR IMPROVING THE SINTERING RESISTANCE OF NOBLE METAL NANOCATALYSTS	2023/02/28
2023/02965	A PREPARATION METHOD OF INSULATING COATING COATED WITH ORIENTED SILICON STEEL	2023/02/28
2023/02966	A LOW DENSITY REFRACTORY HIGH ENTROPY ALLOY MATERIAL AND METHOD OF PREPARING MOLTEN CLADDING LAYER	2023/02/28
2023/02967	AN INTELLIGENT MANAGEMENT METHOD FOR THE WHOLE LIFE CYCLE OF BRIDGE STRUCTURE IN URBAN WATER SYSTEM ENGINEERING	2023/02/28
2023/02968	A MAGNETICALLY CONTROLLED, FULL-ANGLE FEED, THREE-PRODUCT HEAVY MEDIA CYCLONE	2023/02/28
2023/02969	A GREEN TEA PROCESSING PROCESS	2023/02/28
2023/02970	AN AL-SI-CU BRAZING FILLER METAL FOIL AND A PREPARATION METHOD AND APPLICATION THEREOF	2023/02/28
2023/02971	A WELDING ROBOT FOR WELDING PRECISION ELECTRONIC DEVICE	2023/02/28
2023/02972	CONSTRUCTION METHOD OF SYSTEM FOR MEASURING STRAW METHANOGENESIS POTENTIAL	2023/02/28
2023/02973	SITUATIONAL TEACHING AID FOR TEACHING	2023/02/28
2023/02974	ADJUSTABLE DISPLAY BOARD FOR EDUCATION	2023/02/28
2023/02975	A PREPARATION METHOD FOR IMPROVING THE EMULSIFICATION OF ALKALI EXTRACTION LEAF BIOMASS PROTEIN	2023/02/28
2023/02976	ADJUSTABLE TEACHING AID FOR POSTURE CORRECTION TRAINING	2023/02/28

Application Number	Patent Title	Filing Date
2023/02977	A MEASURING DEVICE AND METHOD FOR MONITORING THE PROCESS OF CARBON DIOXIDE DISPLACING METHANE IN SHALE RESERVOIR	2023/02/28
2023/02978	TEACHING TOOL DISPLAY STAND	2023/02/28
2023/02979	A SCR CATALYST AND ITS PREPARATION METHOD	2023/02/28
2023/02980	GENERAL AUXILIARY TEACHING AID FOR TEACHING	2023/02/28
2023/02981	APPARATUS FOR CLASSROOM TEACHING	2023/02/28
2023/02982	ELEVATOR DOOR FRAME FOR INTEGRATED DOOR MACHINE	2023/02/28
2023/02983	A PULVERIZED COAL CONTENT MONITORING AND CONTROL SYSTEM AND ITS WORKING METHOD	2023/02/28
2023/02984	A METHOD FOR THE PREPARATION OF PHOTONIC CRYSTAL FILMS	2023/02/28
2023/02988	A NEW TYPE OF HIGH EFFICIENCY ORE CRUSHER	2023/02/28
2023/02989	LOWER LIMB REHABILITATION TRAINER	2023/02/28
2023/02990	A STEP BY STEP COLLECTING DEVICE FOR SURFACE RUNOFF	2023/02/28
2023/02991	A METHOD FOR THE USE OF THE AUXIN NAPHTHALENE ACETIC ACID TO IMPROVE CEREAL YIELD	2023/02/28
2023/02992	A SOIL INFILTRATION AND PERCOLATION MEASURING DEVICE	2023/02/28
2023/02993	SEPARATION EQUIPMENT FOR CONDENSATE POLISHING	2023/02/28
2023/02994	ON-LINE OPERATION DEPTH MONITORING SYSTEM FOR AGRICULTURAL MACHINERY	2023/02/28
2023/02995	NOVEL WARNING SAFETY NET	2023/02/28
2023/02997	NOVEL CHANNEL WATER MEASURING FACILITY	2023/02/28
2023/02998	METHOD FOR PREPARING POLYALUMINUM CHLORIDE BY USING ALUMINUM DROSS	2023/02/28
2023/02999	PARTIAL OCCLUSION PLANT DISEASE IMAGE RECOGNITION ALGORITHM BASED ON PYTORCH	2023/02/28
2023/03000	TRANSIENT ELECTROMAGNETIC EXPLORATION SYSTEM AND METHOD WITH TUNNEL TRANSMITTING AND AERIAL RECEIVING	2023/02/28
2023/03001	REMOTE SENSING DETECTION METHOD FOR FOREST RESOURCE CHANGE	2023/02/28
2023/03002	A METHOD OF USING WASTE RUBBER TYRES TO MAKE HIGHWAY RIGID AND FLEXIBLE COMPOSITE CRASH BARRIERS	2023/02/28
2023/03003	A MULTI-DIMENSIONAL TENSION AND COMPRESSION TEST DEVICE	2023/02/28
2023/03004	METHOD FOR EX VITRO PROPAGATION OF BOUGAINVILLEA AND GRAFTING OF	2023/02/28

Application Number	Patent Title	Filing Date
	POLYCHROMATIC SERIES OF MICRO-BUDS	
2023/03005	A METHOD FOR MONITORING THE PROCESS OF STIR-FRYING CHINESE HERBAL MEDICINES	2023/02/28
2023/03006	A MULTIFUNCTIONAL INTELLIGENT REMOTE CONTROL SYSTEM AND ITS CONTROL METHOD	2023/02/28
2023/03007	A HIGH-ENTROPY ALLOY SURFACING LAYER WITH HIGH WEAR RESISTANCE AND ITS PREPARATION METHOD	2023/02/28
2023/03008	AN ALCRCUFE2.5NITIX HIGH ENTROPY SURFACING ALLOY WITH HIGH PERFORMANCE AND ITS PREPARATION METHOD	2023/02/28
2023/03009	A HIGH-TEMPERATURE CL-CORROSION-RESISTANT ALLOY CONTAINING NITROGEN AND LOW NICKEL, ITS RAW MATERIAL RATIO AND PREPARATION METHOD	2023/02/28
2023/03010	A DEVICE FOR DETECTING THE STRENGTH OF RESISTANCE WELDED JOINTS AND ITS METHOD	2023/02/28
2023/03011	A WEAR-RESISTANT SURFACING ALLOY CONTAINING SI, CR COMPOSITE CERAMIC PHASE AND ITS PREPARATION METHOD	2023/02/28
2023/03012	AN AUTOMATIC NAIL FEEDER FOR STUD WELDING MACHINE	2023/02/28
2023/03013	AN OPTIMIZATION METHOD FOR THE FLUID PRESSURE FORMING PROCESS OF U-SHAPED METAL BELLOWS	2023/02/28
2023/03014	A MULTI-STEP FLUID PRESSURE FORMING DEVICE FOR METAL BELLOWS AND ITS METHOD	2023/02/28
2023/03015	METHOD FOR MOUNTING SHIP-MOUNTED TELESCOPIC AZIMUTH THRUSTER	2023/02/28
2023/03019	DISINFECTION AND CLEANING DEVICE FOR HAND-FOOT-AND-MOUTH DISEASE AND ITS USE METHOD	2023/02/28
2023/03020	FLY ASH-BASED POROUS HIGH-FLUX TUBULAR REACTION DEVICE, AND PREPARATION METHOD AND APPLICATION THEREOF	2023/02/28
2023/03023	APPARATUS FOR WINDING DOUBLE METAL WIRES INTO METAL RUBBER, AND WORKING METHOD THEREOF	2023/02/28
2023/03024	HIGH-DAMPING AND HIGH-RIGIDITY METAL RUBBER-POLYMER COMPOSITE MATERIAL	2023/02/28
2023/03025	METHOD FOR PREPARING INSULATING BRICK	2023/02/28
2023/03026	METHOD FOR PREPARING WATER PURIFYING AGENT	2023/02/28
2023/03027	AGROBACTERIUM RHIZOGENES STRAIN FOR ACCELERATING WOUND HEALING IN POSTHARVEST POTATO TUBERS	2023/02/28

Application Number	Patent Title	Filing Date
2023/03028	TOOTHPASTE CONTAINING BAMBOO LEAF FLAVONE EXTRACT AND PREPARATION METHOD THEREOF	2023/02/28
2023/03029	ONLINE MASS SPECTROMETER FOR FULL-SCALE HIGH-SENSITIVE DETECTION OF GAS-PHASE POLLUTANTS AND DETECTION METHOD	2023/02/28
2023/03030	DEEP LEARNING-BASED AUTOMATIC TARGET DETECTION MODEL FOR BRIDGE STRUCTURE DISEASES	2023/02/28
2023/03031	NOVEL SIMPLY SUPPORTED BEAM BRIDGE STRUCTURE DAMAGE MONITORING SYSTEM	2023/02/28
2023/03032	METHOD FOR REPAIRING CATHODE MATERIAL	2023/02/28
2023/03033	EXTERNAL TRADITIONAL CHINESE MEDICINE PREPARATION FOR TREATING THYROID NODULES AND PREPARATION METHOD THEREOF	2023/02/28
2023/03034	ANTI-COLLISION ELEVATOR LANDING DOOR	2023/02/28
2023/03035	SERVICE PERFORMANCE EVALUATION METHOD FOR HIGHWAY TUNNEL FACILITIES BASED ON BIG DATA	2023/02/28
2023/03036	METHOD FOR IMPROVING GERMINATION RATE OF ACER PSEUDO-SIEBOLDIANUM SEEDS	2023/02/28
2023/03037	SYNTHESIS AND MICROCAPSULE SECONDARY COATING PREPARATION METHOD FOR SODIUM BUTYRATE	2023/02/28
2023/03038	METHOD FOR PREPARING HIGH-COLOR-PURITY QUANTUM DOT	2023/02/28
2023/03039	A SUPRAMOLECULAR POLYMER NETWORK BASED ON COLUMNAR AROMATIC HOST-GUEST INTERACTIONS AND HALOGEN BONDING	2023/02/28
2023/03040	A MIXING BOX FOR BEVERAGE PROCESSING	2023/02/28
2023/03041	AUTOMOBILE REVERSING SAFETY CONTROL SYSTEM AND METHOD	2023/02/28
2023/03042	AN AUXILIARY DEVICE FOR SURVEYING THE DENSITY OF SOIL SEED BANKS IN DESERT VEGETATION	2023/02/28
2023/03043	A METHOD FOR IMPROVING THE SURVIVAL RATE OF QILIAN ROUND CYPRESS AFFORESTATION IN ARID AREAS	2023/02/28
2023/03044	DRAINAGE DEVICE FOR DEPARTMENT OF THORACIC SURGERY	2023/02/28
2023/03045	POST-THORACIC SURGERY EXERCISE DEVICE	2023/02/28
2023/03046	AEROSOL SAMPLING FOCUSING DEVICE OF LA-MC-ICP-MS	2023/02/28
2023/03047	A METHOD OF DRY WORKING PILE FOUNDATION FORMATION IN SOFT SANDWICH GEOLOGY	2023/02/28

Application Number	Patent Title	Filing Date
2023/03048	A HULL BLOCK DETECTION SYSTEM BASED ON 3D SCENE SCANNING AND ITS METHOD	2023/02/28
2023/03049	A DEVICE FOR HYDROTHERMAL BENDING PLATE DEFORMATION AIDED BY PULSED ELECTROMAGNETIC FORCE	2023/02/28
2023/03050	A METHOD FOR DETECTING SHAFT LOADS WHEN A SHIP IS IN OPERATION	2023/02/28
2023/03051	A JACK-UP PLATFORM PILE LEG TIRE TOOL FOR DRILLING	2023/02/28
2023/03052	A WILDLIFE TARGET MONITORING SYSTEM BASED ON DEEP LEARNING AND ITS METHOD	2023/02/28
2023/03053	A DEVICE FOR FORESTRY ENVIRONMENT MONITORING NETWORKS BASED ON LORA AND ITS METHOD	2023/02/28
2023/03054	A FOREST FIRE MONITORING SYSTEM BASED ON DEEP LEARNING AND ITS METHOD	2023/02/28
2023/03055	AN INSULATING COATING FOR ORIENTED SILICON STEEL AND ITS PREPARATION METHOD AND APPLICATION	2023/02/28
2023/03056	A TEST SYSTEM AND METHOD FOR EXPLOSION DRIVEN WATER MIST FIRE EXTINGUISHING	2023/02/28
2023/03057	DEFLECTION MEASUREMENT AND CONTROL DEVICE FOR TBM	2023/02/28
2023/03058	A MENTAL HEALTH TESTING DEVICE BASED ON BRAIN WAVE DATA AND ITS TESTING METHOD	2023/02/28
2023/03059	AUXILIARY DEVICE FOR MOUNTING TEST MEMBER OF MTS TESTING MACHINE	2023/02/28
2023/03060	POLISHING DEVICE FOR PROCESSING ELECTRONIC COMPONENTS	2023/02/28
2023/03061	A METHOD OF SOWING MIXED ALFALFA AND TALL FESCUE ON SALINE SOILS	2023/02/28
2023/03062	THE PREPARATION METHOD AND APPLICATION OF A SHORT-TIME HIGH-TEMPERATURE TITANIUM ALLOY SHEET WITH HIGH-STRENGTH AND HIGH-TOUGHNESS	2023/02/28
2023/03063	A PLANT CULTIVATION METHOD FOR PREVENTING SOIL EROSION	2023/02/28
2023/03064	A PILE FOUNDATION TREATMENT METHOD TO ELIMINATE THE NEGATIVE FRICTION OF COLLAPSIBLE LOESS	2023/02/28
2023/03065	AN IMAGE CLASSIFICATION, RECOGNITION AND DETECTION METHOD FOR CROPS AND WEEDS	2023/02/28
2023/03066	A CROP EDGE DETECTION METHOD BASED ON FPGA	2023/02/28
2023/03067	A BLOW-SUCTION TYPE COTTON CONVEYING PIPELINE	2023/02/28
2023/03068	A PREPARATION METHOD OF ALCOHOL-BASED THERMOSETED ZINC PHOSPHATE CORE BINDER	2023/02/28

Application Number	Patent Title	Filing Date
2023/03069	A PREPARATION METHOD OF A LIQUID CURING AGENT OF PHOSPHATE BINDER	2023/02/28
2023/03070	A BINDER AND ITS PREPARATION METHOD	2023/02/28
2023/03071	A METHOD FOR INCREASING LAMBING NUMBERS IN SHEEP	2023/02/28
2023/03072	AN INTEGRATED EQUIPMENT FOR THE PURIFICATION OF ODOROUS EXHAUST GASES FROM LASER PERFORATED AEROSOLS	2023/02/28
2023/03073	A FULLY FUNCTIONAL MODULAR TEST DEVICE	2023/02/28
2023/03074	IOT-BASED STUDENT MANAGEMENT SYSTEM	2023/02/28
2023/03075	SEEDLING RAISING METHOD FOR PINUS KESIYA	2023/02/28
2023/03076	A BACTERIOSTATIC AND ENVIRONMENT FRIENDLY MEDICAL ADHESIVE AND ITS PREPARATION METHOD	2023/02/28
2023/03077	METHOD FOR MAKING LOW-SODIUM FERMENTED FLAVORED MEAT PRODUCT	2023/02/28
2023/03078	CONCRETE FILLED CIRCULAR CFRP-STEEL TUBE COLUMN AND REINFORCED CONCRETE BEAM JOINT	2023/02/28
2023/03080	SRR FREE-RADICAL CLUSTER AGENT FOR TREATING VARIOUS MALODOROUS VOCS WASTE GASES	2023/02/28
2023/03081	SRR FREE-RADICAL CLUSTER AGENT MAINLY FOR TREATING VOCS POLLUTANTS CONTAINING AROMATIC RINGS AND NITROGEN AND USE THEREOF	2023/02/28
2023/03082	CONCRETE FILLED CIRCULAR CFRP-STEEL TUBE COLUMN AND STEEL BEAM JOINT	2023/02/28
2023/03083	A NON-INVASIVE METHOD TO OFFSET BACKDOOR POISONING ATTACKS	2023/02/28
2023/03084	METHODOLOGY FOR HAZARD SPATIAL ZONING OF SLOPE DISASTERS	2023/02/28
2023/03085	METHODS FOR MAKING AND USING ECOLOGICAL REMEDIATION PLANTING BAGS IN HIGH-COLD HIGH-ALTITUDE AREA	2023/02/28
2023/03086	A SNP MOLECULAR MARKER IN CHICKEN NCAPG GENE, AND ITS DETECTION PRIMER, KIT, BREEDING METHOD AND APPLICATION	2023/02/28
2023/03087	APPLICATION OF APHID DENSOVIRUS SMDV-YUANYANG IN APHID CONTROL	2023/02/28
2023/03093	A TEST SYSTEM AND METHOD FOR SIMULATING FREEZE-THAW ACTIVATION CATASTROPHES ON MINING FAULTS IN COLD REGIONS	2023/02/28
2023/03094	A PORTABLE INGOT PICKING MECHANISM	2023/02/28
2023/03095	AN INTELLIGENT PARKING GARAGE	2023/02/28
2023/03096	A WEARABLE FINGERTIP FORCE HAPTIC FEEDBACK DEVICE	2023/02/28
2023/03097	AN ICE BREAKING SNOWPLOW WITH ACTIVE	2023/02/28

Application Number	Patent Title	Filing Date
	OBSTACLE AVOIDANCE	
2023/03098	A FINGER REHABILITATION TRAINER WITH A HIGH DEGREE OF ADAPTABILITY	2023/02/28
2023/03099	A HIGH-ACCURACY CALIBRATION DEVICE AND ITS CALIBRATION CALIBRATION METHOD	2023/02/28
2023/03100	A GRADED COMPOSITE LAMPBLACKTREATMENT EQUIPMENT	2023/02/28
2023/03101	A DURABLE BASIN TYPE SPHERICAL STEEL BEARING	2023/02/28
2023/03102	AN UNDERGROUND SPACE DETECTING SAMPLER	2023/02/28
2023/03103	A GREEN ENERGY-SAVING ASSEMBLED ROOF WITH GOOD COOLING EFFECT	2023/02/28
2023/03104	A PERMANENT MAGNET GOVERNOR WITH A REMOVABLE HEAT SINK STRUCTURE	2023/02/28
2023/03105	METHOD FOR IDENTIFYING SEQUENCES OF SIGNATURE PEPTIDES OF CORDYCEPS SINENSIS AND FERMENTED CORDYCEPS PREPARATIONS	2023/02/28
2023/03108	A BLENDING DEVICE	2023/02/28
2023/03109	CONFIGURABLE INTELLIGENT VISUAL DETECTION SYSTEM AND METHOD BASED ON STANDARD INDUSTRIAL CAMERA	2023/02/28
2023/03110	DEVICE AND METHOD FOR TESTING THE SLIDING PROPERTIES OF BIOLOGICAL SOFT TISSUES	2023/02/28
2023/03111	AN EPOXY RESIN-BASED ADHESIVE FOR CERAMIC CULTURAL RELICS RESTORATION, ITS PREPARATION METHOD AND APPLICATION	2023/02/28
2023/03112	AN MG-BI-SN ALLOY WITH LOW ALLOYING, HIGH STRENGTH AND TOUGHNESS AND ITS PROCESSING METHOD	2023/02/28
2023/03113	A MICROBIAL PROCESSING METHOD FOR IMPROVING THE NUTRIENT CONTENT OF SHRIMP GILL SAUCE	2023/02/28
2023/03114	A HYDROPHOBIC CATALYST FOR CO-HYDROGENATION TO MIXED ALCOHOLS, ITS PREPARATION METHOD AND APPLICATION	2023/02/28
2023/03115	A SIMPLE AND HIGH-EFFICIENCY GENETIC TRANSFORMATION METHOD OF EUCALYPTUS HAIRY ROOTS	2023/02/28
2023/03116	CALIBRATED HALL SENSOR DEVICE AND METHOD FOR RUNNING A CALIBRATED HALL SENSOR	2023/02/28
2023/03117	A CALCULATION METHOD FOR PASSIVE EARTH PRESSURE ON THE BACK SPACE OF COUNTERFORCE WALL OF THE SHIELD LAUNCHING SHAFT	2023/02/28
2023/03118	A TEST METHOD FOR MEASURING TENSILE STRENGTH OF SOIL UNDER NEGATIVE CONFINING PRESSURE	2023/02/28

Application Number	Patent Title	Filing Date
2023/03120	INTELLIGENT DIAGNOSIS AND DECISION MAKING METHOD FOR MULTI-SOURCE DISASTER INFORMATION OF DEEP MINE ROADWAY SURROUNDING ROCK	2023/02/28
2023/03121	A METHOD FOR SEPARATING RESIDUAL CARBON FROM CARBON-CONTAINING COAL ASH AND AN AIRFLOW SEPARATION SYSTEM	2023/02/28
2023/03123	A METHOD FOR ADJUSTING THE AXIAL DIMENSIONS OF U-SHAPED BELLOWS	2023/02/28
2023/03145	A PREPARATION AND USE METHOD OF A CASTING WATER-SOLUBLE BINDER	2023/02/28
2023/03146	A METHOD FOR THE PREPARATION OF CERAMIC POWDERS BY A NON-SOLVENT REPLACEMENT NONAQUEOUS PRECIPITATION METHOD	2023/02/28
2023/03147	METHOD FOR THE PREPARATION OF BIOGAS BY ANAEROBIC CO-FERMENTATION OF ANIMAL MANURE AND STRAW THROUGH THE ADDITION OF BIOCHAR	2023/02/28
2023/03148	COMBINED FIXED ORTHODONTIC METHOD FOR MAXILLARY AND MANDIBULAR EXPANSION	2023/02/28
2023/03149	A HYBRID WIND TURBINE TOWER	2023/02/28
2023/03150	A MOLD KIT FOR WIND TURBINE TOWER AND ITS USAGE METHOD	2023/02/28
2023/03151	A CONNECTION ASSEMBLY FOR PRECAST CONCRETE MEMBERS AND ITS USAGE METHOD	2023/02/28
2023/03152	A METHOD FOR MEASURING THE SPATIAL ACTIVE EARTH PRESSURE OF SHAFT LINING IN LOESS AREA	2023/02/28
2023/03153	PHARMACEUTICAL COMPOSITION FOR REDUCING OF CARDIOVASCULAR DISEASES	2023/02/28
2023/03154	BACTERIAL COMPOSITION FOR ENHANCING FLUORESCENCE	2023/02/28
2023/03155	AN IOT-BASED MONITORING SYSTEM FOR SMART AGRICULTURE AND METHOD THEREOF	2023/02/28
2023/03160	METHOD FOR SYNTHESIZING VINYL CHLORIDE BY USING MERCURY CATALYST	2023/02/28
2023/03166	SURVEYING AND MAPPING UNMANNED AERIAL VEHICLE	2023/02/28
2023/03226	AN ANTI-SNOOPING APPARATUS	2023/03/01
2023/03261	METHOD, KIT AND APPLICATION FOR DETECTION OF EDWARDSIELLA TARDA BASED ON RPA COMBINED WITH CRISPR CAS12A	2023/03/02
2023/03318	SPRAYING DEVICE	2023/03/03
2023/03433	A PROCESS FOR PREPARING IMMEDIATE RELEASETOPICAL FORMULATION OF PTEROCARPUS MARSUPIUM ROXB	2023/03/08
2023/03465	A QUANTUM-BASED DIAGNOSTICS METHOD	2023/03/09

Application Number	Patent Title	Filing Date
	FOR ADDITIVE MANUFACTURING MACHINE	
2023/03467	METHOD AND SYSTEM FOR PROVIDING A SMART LADDER TO A USER	2023/03/10
2023/03468	A SYSTEM FOR MONITORING WATER CONSUMPTION OF USERS AND A METHOD THEREOF	2023/03/10
2023/03469	A SYSTEM AND A METHOD FOR COLOR-BLIND PERSON TO DISTINGUISH COLORS IN A SURROUNDING	2023/03/10
2023/03470	A BIODEGRADABLE COVER FOR A PORTABLE ELECTRONIC DEVICE	2023/03/10
2023/03472	AN IOT BASED MANAGEMENT SYSTEM AND A METHOD FOR ASSISTING USERS AROUND A SWIMMING POOL	2023/03/10
2023/03517	METHOD AND SYSTEM FOR PREVENTING INJURY BY FRIENDLY FIRE	2023/03/13
2023/03518	METHOD AND SYSTEM FOR PROVIDING A SMART WHITEBOARD CLEANER	2023/03/13
2023/03519	A PERFUME DISPERSING DEVICE	2023/03/13
2023/03520	A SYSTEM FOR DISPLAYING SELECTED CLOTHES ON A DUMMY HUMAN BODY	2023/03/13
2023/03575	WELDING SYSTEM AND WELDING CONTROL METHOD	2023/03/14
2023/03667	SYSTEM AND METHOD FOR EVALUATING TAILINGS REMEDIATION EFFECT	2023/03/17
2023/03704	STUMP CRUSHER	2023/03/20
2023/03728	COMPUTER NETWORK EQUIPMENT OPERATION MONITORING DEVICE	2023/03/22
2023/03800	TRADITIONAL CHINESE MEDICINAL COMPOSITION FOR PREVENTING AND TREATING TYPE I DIABETES AND ITS APPLICATION IN PREPARING MEDICINES OR MEDICATED DIET FOR PREVENTING AND TREATING TYPE I DIABETES	2023/03/24
2023/03804	ECOLOGICAL METHOD FOR REMEDIATION OF HEAVY METAL POLLUTION IN WATER BODIES	2023/03/24
2023/03805	METHOD OF GENE SITE-DIRECTED MUTATION AND APPLICATION THEREOF	2023/03/24
2023/03844	APPLICATION OF FKBP11 PROTEIN OR CODING GENE IN PREPARING MEDICINES FOR TREATING LARYNGEAL SQUAMOUS CELL CARCINOMA	2023/03/27
2023/03886	METHOD AND SYSTEM FOR OPTIMIZING ELECTRIC SHIP VOYAGE BASED ON STATE OF CHARGE ESTIMATION OF LITHIUM BATTERY	2023/03/28
2023/03887	METHOD FOR PROMOTING GERMINATION OF AKEBIA TRIFOLIATA SUBSP.AUSTRALIS SEEDS AND METHOD FOR PROMOTING GROWTH OF SEEDLINGS OF AKEBIA TRIFOLIATA SUBSP.AUSTRALIS	2023/03/28
2023/03888	PLANT SEED PRIMER, PREPARATION METHOD AND APPLICATION	2023/03/28

Application Number	Patent Title	Filing Date
2023/03890	HELMET FOR TREATING INSOMNIA	2023/03/28
2023/03891	DOUBLE MELON SPLEEN-BOOSTING DISPERSING AGENT AND ITS PREPARATION METHOD	2023/03/28
2023/03919	IMPROVEMENT METHOD FOR IMPROVED BRASSICA NAPUS RAPHANUSSATIVUS CYTOPLASMIC MALE STERILE RESTORER LINE	2023/03/29
2023/03922	A HORN MOUTH TEE BEND BRIDGE FRAME STRUCTURE CONNECTING PIECE	2023/03/29
2023/03930	CONCRETE STRUCTURE CURING DEVICE	2023/03/29
2023/03945	LIMIT DEVICE FOR DETECTING MOTOR FAULT OF CAR	2023/03/29
2023/03948	THREE-DIMENSIONALLY DISTRIBUTED LIQUID ATOMIZATION HEAT EXCHANGER, CONTROL METHOD THEREOF, REFRIGERATION SYSTEM, AND AIR CONDITIONER	2023/03/29
2023/03969	ALLOY WIRE ROD AND PREPARATION METHOD AND APPLICATION THEREOF	2023/03/29
2023/03984	AGROTIS IPSILON NORA VIRUS FOR PREVENTING AND CONTROLLING LEPIDOPTERAN PESTS AND APPLICATION THEREOF	2023/03/30
2023/03995	DUAL-MOTOR PERFORMANCE SYNCHRONOUS TEST DEVICE	2023/03/30
2023/03997	A DESIGN ASSISTANT SYSTEM BASED ON XR AND IMAGE GENERATION TECHNOLOGY	2023/03/30
2023/03998	AN IMAGE GENERATION METHOD BASED ON GAN NEURAL NETWORK AND WEIGHTED AVERAGE IMAGE OPTIMIZATION TECHNIQUE	2023/03/30
2023/04082	COMPOSITE FIELD MODULATED MICROWAVE COLD PLASMA JET DEVICE	2023/04/03
2023/04088	PHENYLE KETONE COMPOUNDS OR DERIVATIVES THEREOF WITH FLUORESCENCE LUMINESCENT PROPERTIES	2023/04/03
2023/04158	WATER STACKING STRUCTURE FOR WATER CHANNEL	2023/04/05
2023/04159	A DISTANCE MEASURING DEVICE AND A CALIPER	2023/04/05
2023/04262	POSITIONING RACK AND EARTHING METHOD FOR PREVENTING FIELD SUGARCANE FROM LODGING	2023/04/11
2023/04296	ALLOY WIRE ROD AND PREPARATION METHOD AND APPLICATION THEREOF	2023/04/11

DESIGNS

Advertisement List for May 2023

Number of Advertised Designs: 154

Application Number	Design Articles	Filing Date
A2020/00884	Wash Station	2020/06/23
A2020/01160	Pitcher Cap and Pitcher	2020/08/27
A2020/01291	Computing Device with Graphical User Interface	2020/09/25
A2020/01460	FOOD DEHYDRATORS	2020/11/11
A2020/01467	FOOD DEHYDRATORS	2020/11/11
A2020/01481	Container	2020/11/18
A2020/01506	Pharmaceutical Tablet	2020/11/23
A2020/01621	Vehicle Roof Rack Mounting Adaptor	2020/12/15
A2021/00034	Blender	2021/01/21
A2021/00035	Juicer Container	2021/01/21
A2021/00247	Hiking Bag	2021/03/10
A2021/00939	Car	2021/08/06
A2021/01191	Part of Lifting Vehicles	2021/09/30
A2021/01335	BOARD GAME	2021/10/27
A2021/01350	CHAIN LINKS	2021/10/29
A2021/01352	BARRIER ARRANGEMENTS	2021/10/29
A2021/01354	BARRIERS	2021/10/29
A2022/00148	AUTOMOBILES	2022/02/11
A2022/00149	AUTOMOBILES	2022/02/11
A2022/00189	Wheel	2022/02/24
A2022/00198	SHAVERS	2022/02/25
A2022/00199	SHAVERS	2022/02/25
A2022/00200	HANDLES FOR SHAVERS	2022/02/25
A2022/00201	BLADES FOR SHAVERS	2022/02/25
A2022/00203	SHAVERS	2022/02/25
A2022/00204	HANDLES FOR SHAVERS	2022/02/25
A2022/00205	BLADES FOR SHAVERS	2022/02/25
A2022/00373	BUG KILLING PISTOLS	2022/04/07
A2022/00383	PARASOL BANNER	2022/04/08
A2022/00530	TOOTHBRUSHES	2022/05/16
A2022/00537	VEHICLE	2022/05/18
A2022/00538	VEHICLE	2022/05/18
A2022/00558	MOTOR VEHICLES	2022/05/23
A2022/00654	MEMORY CARDS	2022/06/14
A2022/00661	MEMORY CARDS	2022/06/14
A2022/00770	ANTI-WRINKLE APPLIANCES	2022/06/30
A2022/00782	CONNECT TERMINAL FACIA	2022/06/30
A2022/00801	DOOR STOP	2022/07/11
A2022/00807	SHEET FOR A BED	2022/07/14
A2022/00829	CRAFTING APPARATUS	2022/07/26
A2022/00830	PRESSES	2022/07/26
A2022/00846	Wristwatch	2022/07/28
A2022/00869	LASH EXTENSION SEPARATING APPARATUSES	2022/07/29
A2022/00870	LASH EXTENSION SEPARATING APPARATUSES	2022/07/29
A2022/00871	LASH EXTENSION SEPARATING APPARATUSES	2022/07/29

Application Number	Design Articles	Filing Date
A2022/00872	LASH EXTENSION SEPARATING APPARATUSES	2022/07/29
A2022/00877	FOOTWEAR	2022/07/29
A2022/00878	BLENDERS	2022/07/29
A2022/00884	WATCHES	2022/08/01
A2022/00886	MOBILE PHONES	2022/08/02
A2022/00887	MOBILE PHONES	2022/08/02
A2022/00906	HEAD-MOUNTED DISPLAY	2022/08/10
A2022/00907	HEAD-MOUNTED DISPLAY	2022/08/10
A2022/00908	HEAD-MOUNTED DISPLAY	2022/08/10
A2022/00909	MINING TRUCK	2022/08/10
A2022/00911	GRAPHIC DESIGNS FOR PRODUCT PACKAGING	2022/08/10
A2022/00912	GRAPHIC DESIGNS FOR PRODUCT PACKAGING	2022/08/10
A2022/00913	GRAPHIC DESIGNS FOR PRODUCT PACKAGING	2022/08/10
A2022/00914	GRAPHIC DESIGNS FOR PRODUCT PACKAGING	2022/08/10
A2022/00921	HEAD-MOUNTED DISPLAY	2022/08/12
A2022/00922	HEAD-MOUNTED DISPLAY	2022/08/12
A2022/00923	LIGHT SHIELD	2022/08/12
A2022/00930	Car	2022/08/15
A2022/00941	Perfume Bottle	2022/08/16
A2022/00943	Car	2022/08/17
A2022/00944	Toy Car	2022/08/17
A2022/00958	CONTAINER	2022/08/17
A2022/00959	CONTAINER	2022/08/17
A2022/00960	CONTAINER	2022/08/17
A2022/00966	FOOTWEAR	2022/08/18
A2022/00968	BOOK COVER	2022/08/18
A2022/00975	LASH APPARATUSES	2022/08/22
A2022/00976	LASH APPARATUSES	2022/08/22
A2022/00977	LASH APPARATUSES	2022/08/22
A2022/00981	FOOTWEAR	2022/08/22
A2022/00982	FOOTWEAR	2022/08/22
A2022/00983	FOOTWEAR	2022/08/22
A2022/00984	NOZZLES	2022/08/23
A2022/00985	AUTOMOBILE	2022/08/23
A2022/00987	WATER HEATERS	2022/08/25
A2022/00998	ADJUSTING RACK	2022/08/26
A2022/01000	ADJUSTING RACK	2022/08/26
A2022/01002	SCRAPER ASSEMBLY	2022/08/26
A2022/01004	PLANTER	2022/08/26
A2022/01007	REAMERS	2022/08/26
A2022/01009	SUITCASES	2022/08/29
A2022/01011	BUILDING UNITS AND CONSTRUCTION ELEMENTS	2022/08/29
A2022/01014	CHASSIS FOR A TROLLEY	2022/08/30
A2022/01015	BASKET FOR A TROLLEY	2022/08/30
A2022/01016	SYRINGES	2022/08/31

Application Number	Design Articles	Filing Date
A2022/01017	SYRINGES	2022/08/31
A2022/01018	SYRINGES	2022/08/31
A2022/01019	SYRINGES	2022/08/31
A2022/01022	MACHINES FOR GAMES OF CHANCE	2022/08/31
A2022/01023	Watch Dial	2022/08/31
A2022/01024	Watch Dial	2022/08/31
A2022/01025	Watch Dial	2022/08/31
A2022/01030	BLENDER	2022/09/02
A2022/01031	BLENDER	2022/09/02
A2022/01032	HAND SHOWER	2022/09/02
A2022/01056	STAND STEAMER	2022/09/09
A2022/01057	STAND STEAMER	2022/09/09
A2022/01058	STAND STEAMER	2022/09/09
A2022/01059	STEAMER HEAD	2022/09/09
A2022/01060	STEAMER HEAD	2022/09/09
A2022/01061	STEAMER BASE	2022/09/09
A2022/01062	STEAMER BASE	2022/09/09
A2022/01085	CAR	2022/09/16
A2022/01086	SCALE CAR MODEL	2022/09/16
A2022/01121	A SET OF TAGS FOR ANIMALS	2022/09/19
A2022/01142	LOGO, GRAPHIC SYMBOL, GRAPHIC DESIGN AND ORNAMENTATION	2022/09/26
A2022/01143	LOGO, GRAPHIC SYMBOL, GRAPHIC DESIGN AND ORNAMENTATION	2022/09/26
A2022/01144	LOGO, GRAPHIC SYMBOL, GRAPHIC DESIGN AND ORNAMENTATION	2022/09/26
A2022/01145	PASTA MAKER	2022/09/26
A2022/01146	PASTA MAKER	2022/09/26
F2020/01461	FOOD DEHYDRATORS	2020/11/11
F2020/01468	FOOD DEHYDRATORS	2020/11/11
F2021/00726	A Sealing Mechanism in a Cap for a Water Bottle	2021/06/21
F2021/01171	PENILE EXTENDER DEVICE	2021/09/27
F2021/01351	CHAIN LINKS	2021/10/29
F2021/01353	BARRIER ARRANGEMENTS	2021/10/29
F2021/01355	BARRIERS	2021/10/29
F2022/00374	BUG KILLING PISTOLS	2022/04/07
F2022/00624	ACCESSORY FOR AN INTRAVENOUS INFUSION SET	2022/06/02
F2022/00646	DRY FREEZER INTERACTIVE TRAILER	2022/06/10
F2022/00752	CONNECT TERMINAL FRAME	2022/06/30
F2022/00783	CONNECT TERMINAL FACIA	2022/06/30
F2022/00808	SHEET FOR A BED	2022/07/14
F2022/00873	LASH EXTENSION SEPARATING APPARATUSES	2022/07/29
F2022/00874	LASH EXTENSION SEPARATING	2022/07/29

Application Number	Design Articles	Filing Date
	APPARATUSES	
F2022/00875	LASH EXTENSION SEPARATING APPARATUSES	2022/07/29
F2022/00876	LASH EXTENSION SEPARATING APPARATUSES	2022/07/29
F2022/00978	LASH APPARATUSES	2022/08/22
F2022/00979	LASH APPARATUSES	2022/08/22
F2022/00980	LASH APPARATUSES	2022/08/22
F2022/00999	ADJUSTING RACK	2022/08/26
F2022/01003	SCRAPER ASSEMBLY	2022/08/26
F2022/01005	PLANTER	2022/08/26
F2022/01010	SUITCASES	2022/08/29
F2022/01040	CONTAINER	2022/09/02
F2022/01041	CONTAINER	2022/09/02
F2022/01069	WHEEL LOCKING DEVICE	2022/09/09
F2022/01080	BEAMS	2022/09/15
F2022/01081	STIFFENERS	2022/09/15
F2022/01082	VOID FORMERS	2022/09/15
F2022/01108	BOTTLE	2022/09/19
F2022/01130	TYRE THREAD	2022/09/23
F2022/01131	TYRE THREAD	2022/09/23
F2022/01133	LOCATORS FOR A SURVEY APPARATUS	2022/09/23
F2022/01134	LOCATORS FOR A SURVEY APPARATUS	2022/09/23
F2022/01149	HEADWARE	2022/09/28
F2022/01152	SCHOOL TRACKSUIT	2022/09/29
F2023/00174	RAMP	2023/02/09
F2023/00197	BUGGY WHIP	2023/02/14